Ingersoll-Rand®

7/31, 7/41

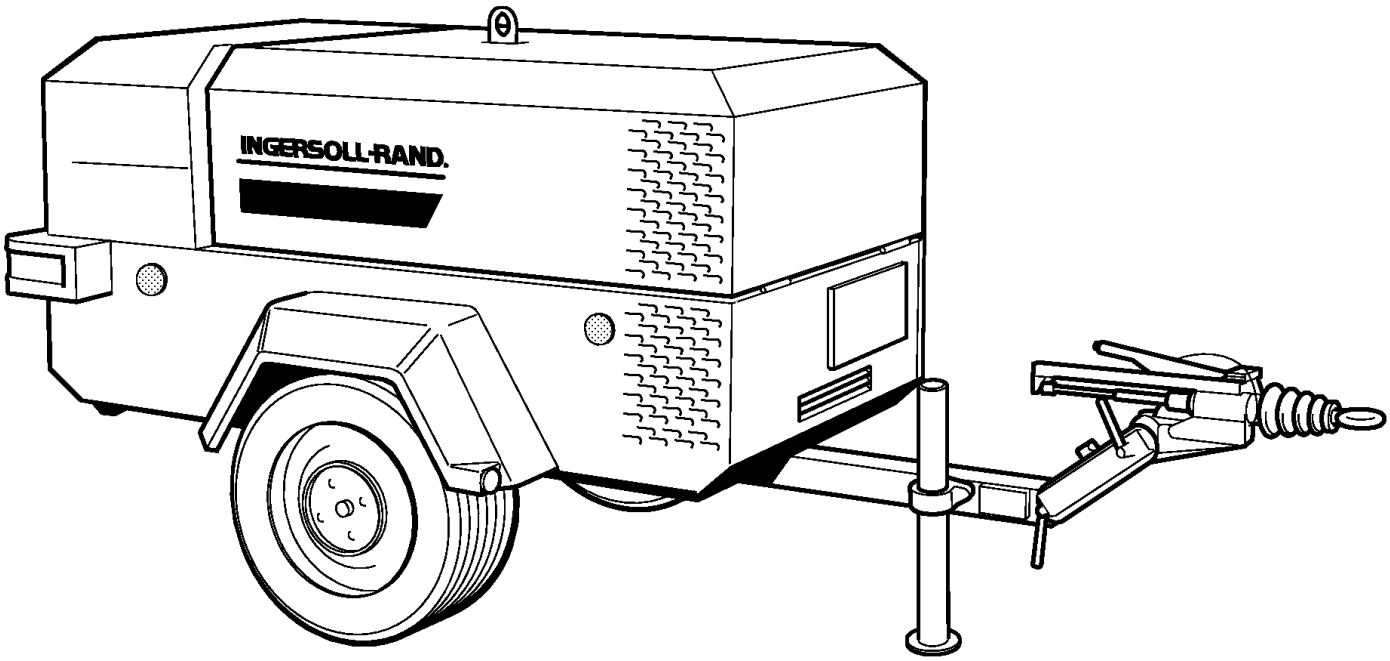

GB	PARTS CATALOGUE	E	LISTA DE REPUESTOS
F	CATALOGUE DE PIÈCES DÉTACHÉES	DK	RESERVEDELSKATALOG
NL	ONDERDELENKATALOGUS	S	RESERVDELSKATALOG
D	ERSATZTEILLISTE	N	RESERVEDELSKATALOG
P	LISTA DE PEÇAS	SF	VARAOSALUETTELO
I	LISTA RICAMBI		

Doosan purchased Bobcat Company from Ingersoll-Rand Company in 2007. Any reference to Ingersoll-Rand Company or use of trademarks, service marks, logos, or other proprietary identifying marks belonging to Ingersoll-Rand Company in this manual is historical or nominative in nature, and is not meant to suggest a current affiliation between Ingersoll-Rand Company and Doosan Company or the products of either.

C.C.N : 54626494
DATE : FEBRUARY 2001
Revised (09-12)

7/31	**SERIAL No: 320001 –>**
7/41	**SERIAL No: 360001 –>**

CONTENTS

Page	Description	'T' Nº
1	Running gear (Fixed Height)	T1270A
2	Running gear (Fixed Height)	T1270B
3	Running gear (Fixed Height)	T1270C
4	Running gear (Variable height)	T1271A
5	Running gear (Variable height)	T1271B
6	Running gear (Variable height)	T1271C
7	Engine / Airend assembly	T1820
8	Engine / Airend assembly	T1843
9	**Engine Parts: 3IRL4N** Engine gasket kit Cylinder head cover Cylinder head Cylinder block Oil pan and level gauge Camshaft and valve Crankshaft, piston and flywheel Exhaust manifold Water pump and corrosion resistor Fan and fan belt Fuel injection system Fuel filter and bracket Fuel pump and pipe Oil pump and oil strainer Engine electrical control parts Timing gear case	
29	**Engine Parts: 4IRL5N** Engine gasket kit Cylinder head cover Cylinder head Cylinder block Oil pan and level gauge Camshaft and valve Crankshaft, piston and flywheel Flywheel housing Exhaust manifold Water pump Fan Fuel injection system Fuel filter and bracket Fuel pump Oil pump and oil strainer Engine electrical control parts Timing gear case	
48	Enclosure	T1821
49	Air intake / Engine exhaust system	T1822
50	Oil / Air piping	T1823
51	Cooling system	T1824
52	Fuel system	T1825
53	Regulation system	T1826
54	Instrumentation / Electrical system	T1827
55	Instrumentation / Electrical system	T1619
56	Decals and documentation	T1828
57	Options – Lubricator	T1846
58	Options – Regulation system	T1844
59	Options – Generator	T1845
60	Options – Generator 115V	T1847
61	Options – Generator 230V	T1847
62	Options – Generator 400V	T1847
63	Recommended parts	
74	Glossary of non–illustrated items	
78	Fasteners index / Tube fittings index	
80	CCN index	

ABBREVIATIONS & SYMBOLS

–>####	Up to Serial No.
####–>	From Serial No.
####	Contact Ingersoll–Rand for Serial No.
*****	Not illustrated
†	Option
AR	As required
D	Germany
DK	Denmark
E	Spain
F	France
GB	Great Britain
I	Italy
N	Norway
NL	Netherlands
P	Portugal
S	Sweden
SF	Finland

General

This manual, which contains an illustrated parts breakdown, has been prepared as an aid in identifying and ordering parts for the machine. All of the parts, listed in the parts breakdown, are manufactured with the same precision as the original equipment.

Ingersoll–Rand Company service facilities and parts are available worldwide. There are Ingersoll–Rand Company Branch Offices and authorised distributors located in the principle cities of the United States. In Canada, our customers are serviced by the Canadian Ingersoll–Rand Company, Limited. There are also Ingersoll–Rand Company subsidiaries and authorised distributors located in the principle cities throughout the world.

Description

The illustrated parts breakdown identifies the various assemblies, sub–assemblies and detailed parts which make up this machine.

A series of illustrations show each part clearly and in it's correct location relative to the other parts in the illustration. Each part in an illustration is referenced with a number. The number, description and quantity needed per assembly are listed in numerical order on the following pages.

How to use this parts manual

1. Locate the desired illustration.

2. Locate the part on the illustration by visual identification and note the reference number.

3. Find the reference number on the tabulated page, along with the Part Number and Description.

How to order parts

In order that all avoidable errors be eliminated when ordering parts, please specify the following:

1. The model number of the unit as shown on the Compressor Data Plate.

2. The serial number of the unit as shown on the Compressor Data Plate.

3. The part number of this manual.

4. The part number, description and quantity needed exactly as listed.

5. The motor data code shown on the motor data plate.

1 RUNNING GEAR (Fixed Height) M&E

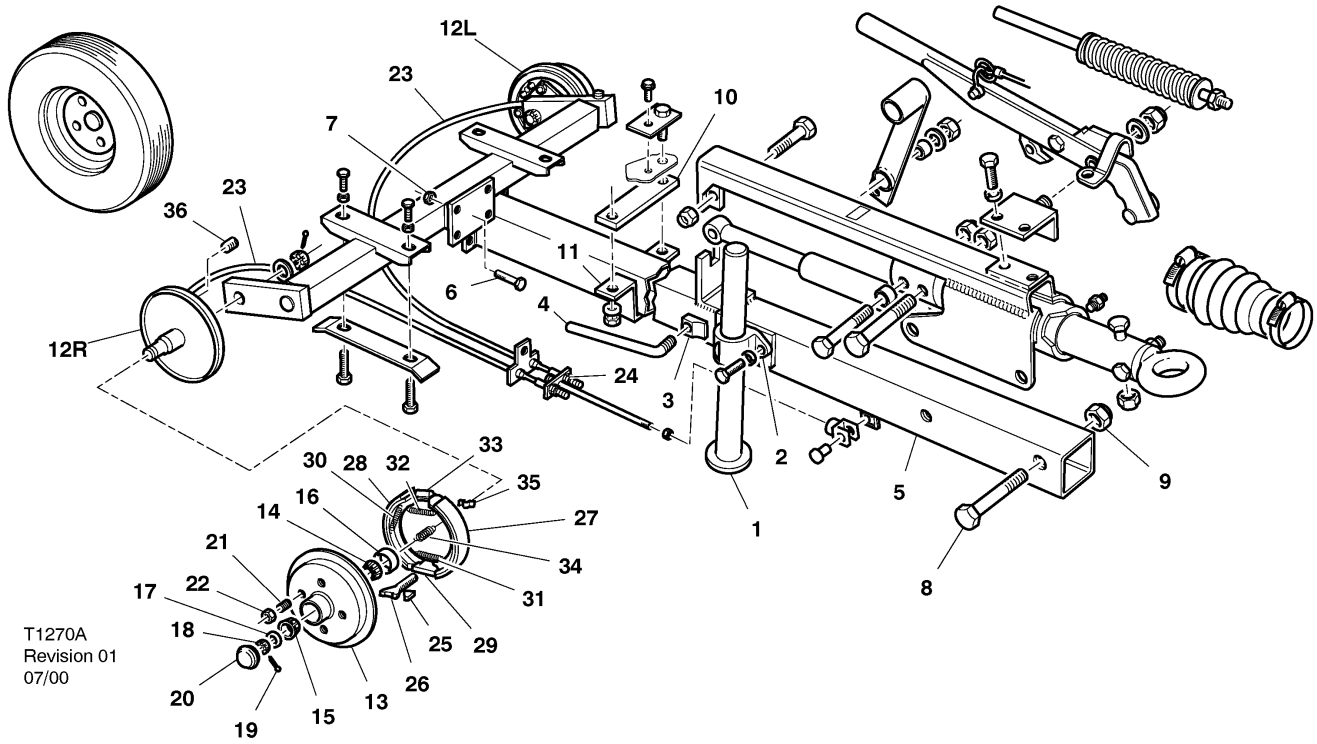

Item	cpn	Qty.	Description
1–5	92762962	1	Propstand assembly
1	92763002	1	Prop stand
2	92762996	1	Bracket
3	92762970	1	Pad
4	92762988	1	Handle
5–95	54403530	1	Running gear assembly Braked version
*†5–95	54575154	1	Running gear (Extended drawbar option)
5	92793249	1	Tube, towbar
*†5	54576525	1	Tube, towbar (Extended drawbar option)
6	95252524	4	Setscrew
7	92022763	4	Nut
8	92053537	2	Bolt
9	92022763	2	Nut
10	92793272	1	Pad
11	92757046	1	Clamp
12–56	54427083	1	Axle tube assembly
12R–40	54427182	1	Hub & stub axle assy. (Right hand)
12L–40	54427185	1	Hub & stub axle assy. (Left hand)
12R	54427240	1	Stub axle & backplate assy (Right Hand)
12L	54427257	1	Stub axle & backplate assy (Left Hand)
13	92793405	1	Hub
14	92074350	1	Bearing
15	92102540	1	Bearing
16	92074384	1	Seal
17	92053974	1	Washer
18	95391348	1	Nut
19	95002697	1	Pin
20	92793413	1	Cap
21	92102607	4	Stud
22	92102599	4	Nut
23	92687433	2	Cable
24	92304518	4	Nut
25	92055706	2	Adjuster
26	92055698	1	Bolt
27	92053487	1	Shoe
28	92053495	1	Shoe
29	92053776	2	Carrier
30	92053826	2	Spring
31	92053842	1	Spring
32	92053834	1	Spring
33	92053768	1	Expander
34	92053800	1	Spring
35	92053818	1	Saddle
36	92055680	1	Plug
37	–		
38	–		

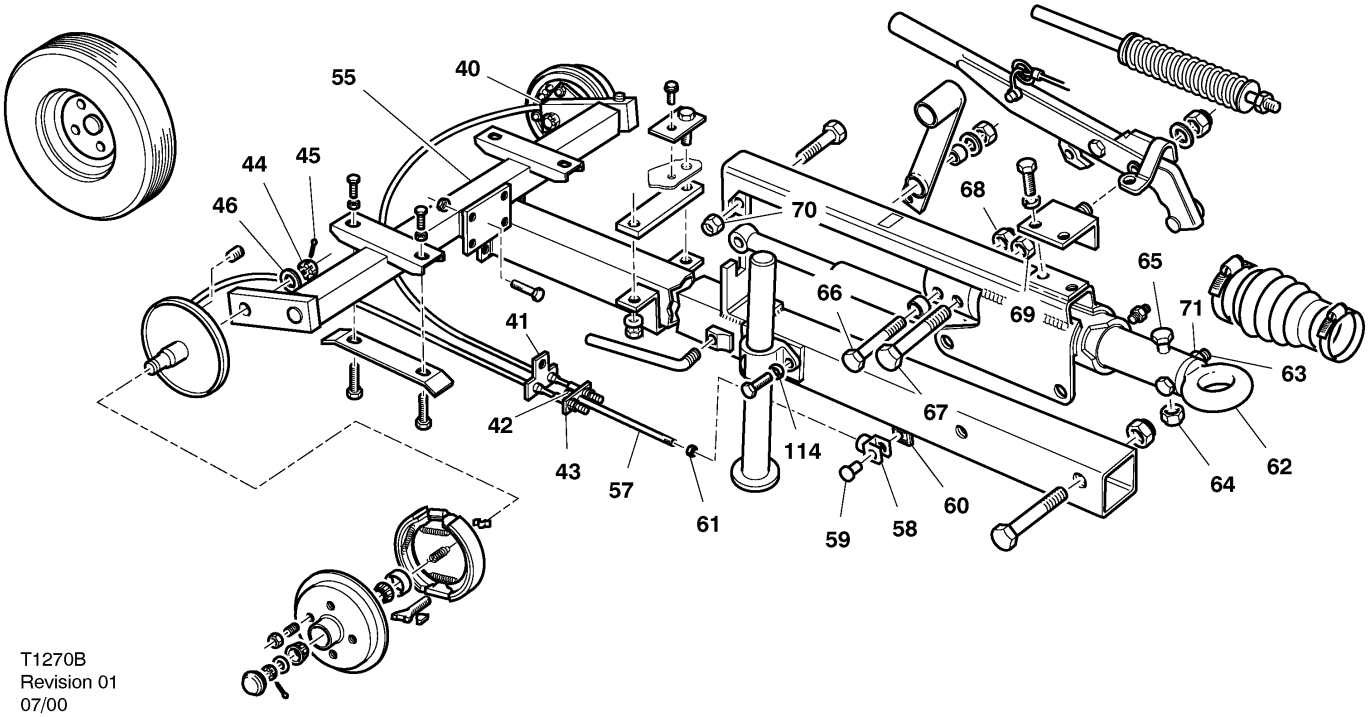

T1270B
Revision 01
07/00

Item	cpn	Qty.	Description
39	–		
40	92680669	1	Holder, cable
41	92054006	1	Plate
42	95076774	2	Nut
43	92055433	1	Plate
44	54514310	2	Nut
45	54514328	2	Pin
46	54514336	2	Washer
47	–		
48	–		
49	–		
50	–		
51	–		
52	–		
53	–		
54	–		
*55	54427224	1	Axle, bare
56	–		
57	92687417	1	Rod
*†57	88111349	1	Rod (Extended drawbar option)
58	92102573	1	Clevis
59	92102565	1	Pin
60	92102557	1	Clip, retaining
61	95076774	1	Nut
62–94	92680552	1	Coupling assembly
62	92055482	1	Eye
63	92053859	1	Bolt
64	92022540	1	Nut
65	92053859	1	Bolt
66	92053859	1	Bolt
67	92053859	1	Bolt
68	92022540	1	Nut
69	92022540	1	Nut
70	92022540	1	Nut
71	92022540	1	Nut

RUNNING GEAR (Fixed Height) M&E

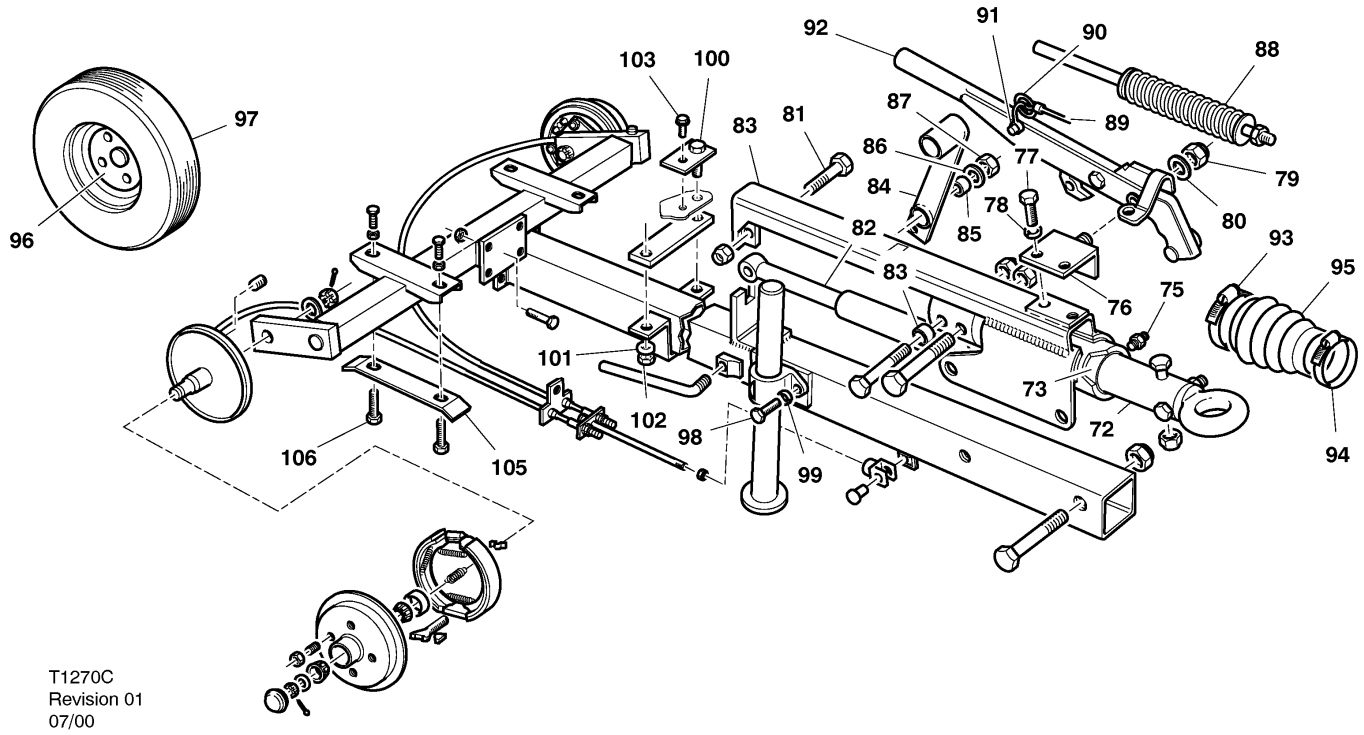

Item	cpn	Qty.	Description	Item	cpn	Qty.	Description	Item	cpn	Qty.	Description
72	92680602	1	Shaft	85	92055581	1	Bush	96	92259563	1	Wheel
73	92055516	2	Bush	86	95064697	1	Washer	97	92869775	1	Tyre
74	92680610	1	Collar	87	92022763	1	Nut	98	90103185	2	Setscrew
75	92302058	2	Nipple	88	92055623	1	Spring	99	92304682	2	Washer
76	92680701	1	Bracket	89	92055631	1	Cable	100	89260319	2	Bolt
77	92272343	2	Setscrew	90	92055649	1	Ring	101	92061506	2	Washer, snubber
78	95081857	2	Washer	91	92055656	1	Shackle	102	92304575	2	Locknut
79	95077442	1	Locknut	92	92680693	1	Lever, handbrake	103	92368687	2	Screw
80	95094314	1	Washer	93	92253137	1	Clip, retaining	*104	92661750	1	Strap
81	92053883	1	Bolt	94	92253137	1	Clip, retaining	105	92790831	2	Washer, tab
82	92055557	1	Damper	95	54427273	1	Cover	106	90103185	4	Screw
83	92680628	1	Frame	96–97	92869783	2	Wheel & tyre assembly				
84	92680636	1	Lever								

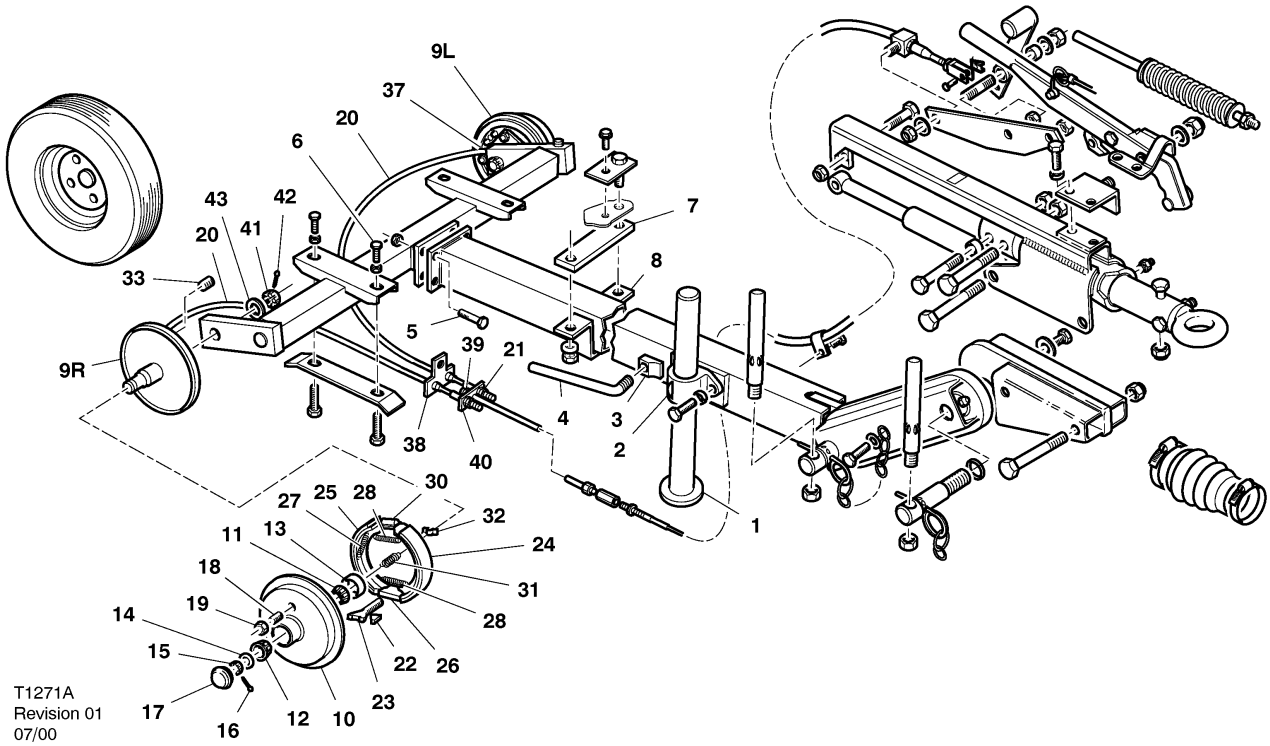

Item	cpn	Qty.	Description
1–5	92762962	1	Propstand assembly
1	92763002	1	Prop stand
2	92762996	1	Bracket
3	92762970	1	Pad
4	92762988	1	Handle
5–118 (F)	92782762 –>314683	1	Running gear assembly Braked version
5–118 (D)	92789338 –>314683	1	Running gear assembly Braked version
5–118	54403605 314684–>	1	Running gear assembly Braked version
5	95252524	4	Setscrew
6	92022763	4	Nut
7	92793272	1	Pad
8	92757046	1	Clamp
9–53	54427083	1	Axle tube assembly
9R–40	54427182	1	Hub & stub axle assy. (Right hand)
9L–40	54427185	1	Hub & stub axle assy. (Left hand)
9R	54427240	1	Stub axle & backplate assy (Right Hand)
9L	54427257	1	Stub axle & backplate assy (Left Hand)
10	92793405	1	Hub
11	92074350	1	Bearing
12	92102540	1	Bearing
13	92074384	1	Seal
14	92053974	1	Washer
15	95391348	1	Nut
16	95002697	1	Pin
17	92793413	1	Cap
18	92102607	4	Stud
19	92102599	4	Nut
20	92687433	2	Cable
21	92304518	4	Nut
22	92055706	2	Adjuster
23	92055698	1	Bolt
24	92053487	1	Shoe
25	92053495	1	Shoe
26	92053776	1	Carrier
27	92053826	2	Spring
28	92053842	1	Spring
29	92053834	1	Spring
30	92053768	1	Expander
31	92053800	1	Spring
32	92053818	1	Saddle
33	92055680	1	Plug
34	–		
35	–		
36	–		
37	92680669	1	Holder, cable
38	92054006		Plate
39	95076774		Nut
40	92055433		Plate
41	54514310	2	Nut
42	54514328	2	Pin
43	54514336	2	Washer
44	–		
45	–		
46	–		

RUNNING GEAR (Variable Height) M&E

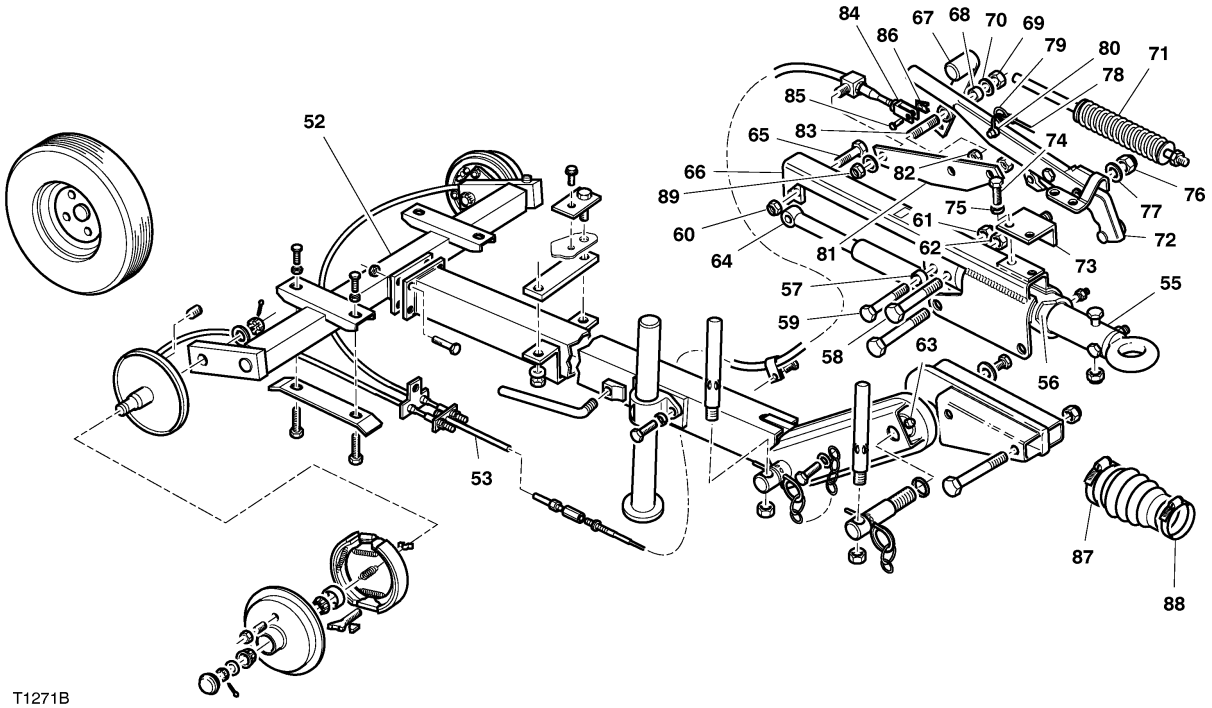

T1271B
Revision 01
07/00

Item	cpn	Qty.	Description	Item	cpn	Qty.	Description	Item	cpn	Qty.	Description
47	–			61	92022540	1	Locknut	76	95077442	1	Locknut
48	–			62	92022540	1	Locknut	77	95094314	1	Washer
49	–			63	92302058	2	Nipple	78	92055631	1	Cable
50	–			64	92055557	1	Damper	79	92055649	1	Ring
51	–			65	92053883	1	Bolt	80	92055656	1	Shackle
52	54427224	1	Axle, bare	66	92754555	1	Frame	81	92754563	1	Bracket
53	92756907	1	Rod	67	92754530	1	Lever	82	95076790	1	Nut
54	–			68	92055581	1	Bush	83	92754589	1	Stud
55–95	92719921	1	Coupling assembly	69	92022763	1	Locknut	84	92754548	1	Clevis
55	92680602	1	Shaft	70	95064697	2	Washer	85	92102565	1	Pin
56	92055516	1	Bush	71	92055623	1	Spring	86	92102557	1	Clip, retaining
57	92680610	1	Collar	72	92680693	1	Lever, handbrake	87	92253137	1	Clip, retaining
58	92053859	1	Bolt	73	92680701	1	Bracket	88	92253137	1	Clip, retaining
59	92053859	1	Bolt	74	92272343	2	Screw	89	92022763	1	Locknut
60	92022540	1	Locknut	75	95081857	2	Washer				

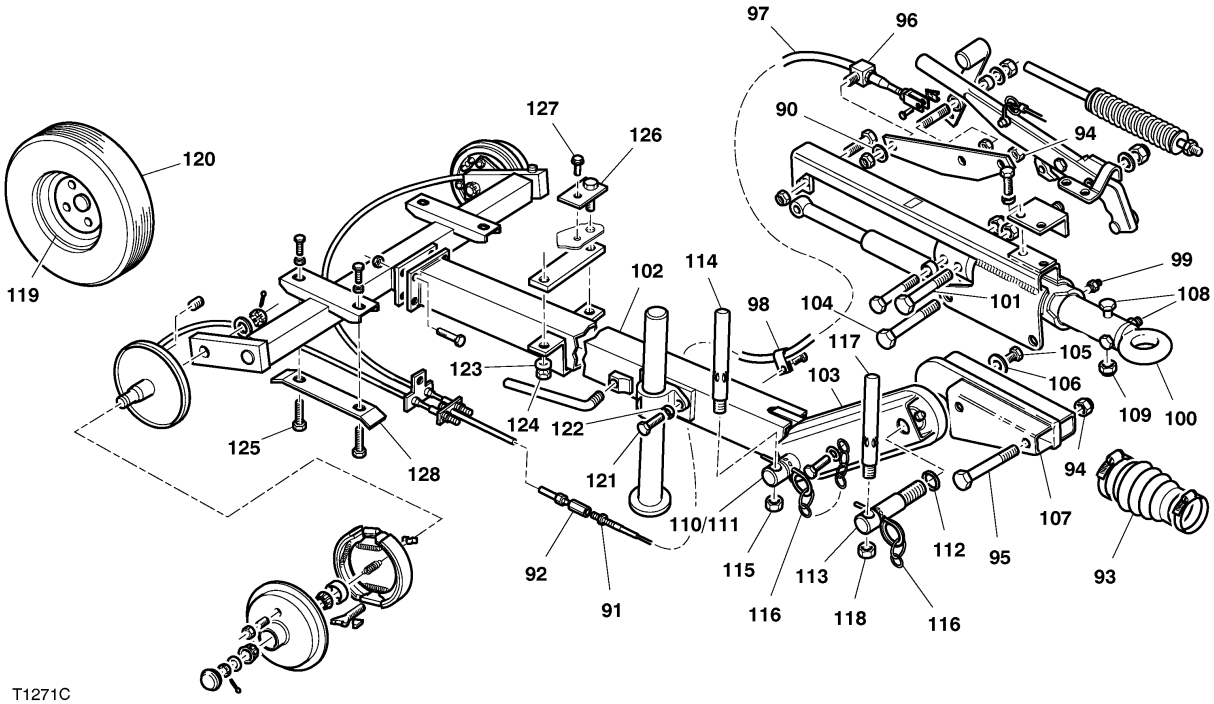

T1271C
Revision 01
07/00

Item	cpn	Qty.	Description
90	95064697	1	Washer
91	92304518	1	Nut
92	92753789	1	Adaptor
93	54427273	1	Cover
94	92022763	4	Nut
95	92053537	1	Bolt
96	92754597	1	Stop
97	92754605	1	Cable
98	92756675	1	Clip, retaining
99	92302058	1	Nipple
100 (D)	92049543	1	Eye
101 (F)	92754571	1	Eye
101	92053859	1	Bolt
102	54428289	1	Tube, towbar
103	92756774	1	Link
104	92053537	1	Bolt
105	92312339	2	Screw
106	92756865	2	Washer
107	92756816	1	Mount
108	92053859	2	Bolt
109	92022540	2	Nut
110	92756790	1	Collar
111	92756782	1	Pin
112	92756790	1	Collar
113	92756782	1	Pin
114	92810373	1	Handle
115	92848647	1	Nut
116	92810381	1	Chain & pin assembly
117	92810373	1	Handle
118	92848647	2	Nut
119–120	92869783	2	Wheel & tyre assembly
119	92259563	1	Wheel
120	92869775	1	Tyre
121	90103185	2	Setscrew
122	92304682	2	Lockwasher
123	92061506	2	Washer
124	92304575	2	Locknut
125	90103185	2	Screw
126	89260319	2	Bolt
127	92368687	2	Screw
128	92790831	2	Washer, tab

ENGINE/AIREND ASSEMBLY

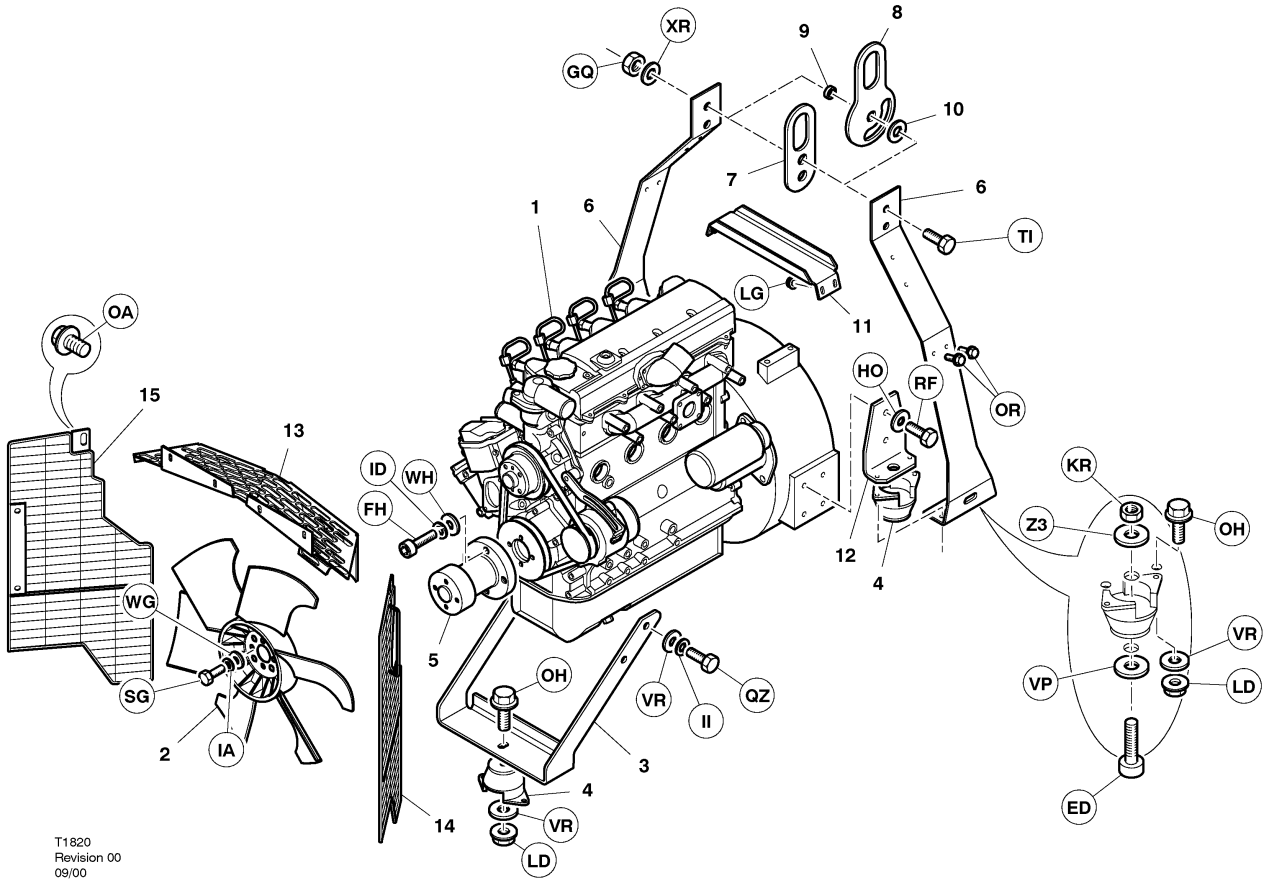

Item	ccn	Qty.	Description
1	54497276	1	Engine 7/31
	54612239	1	Engine 7/41
2	54619028	1	Fan 7/31
	54619010	1	Fan 7/41
3	54540505	1	Bracket
4	36875565	3	Mount
5	54540539	1	Spacer
6	54540455	2	Bail, lifting
7	54505987	1	Eye
†8	54506027	1	Eye
†9	54506035	2	Spacer
†10	54592126	1	Washer, Spring
11	54570908	1	Support
12	54568415	2	Bracket
13	54581947	1	Guard
14	54540403	1	Guard LH
15	54540422	1	Guard RH

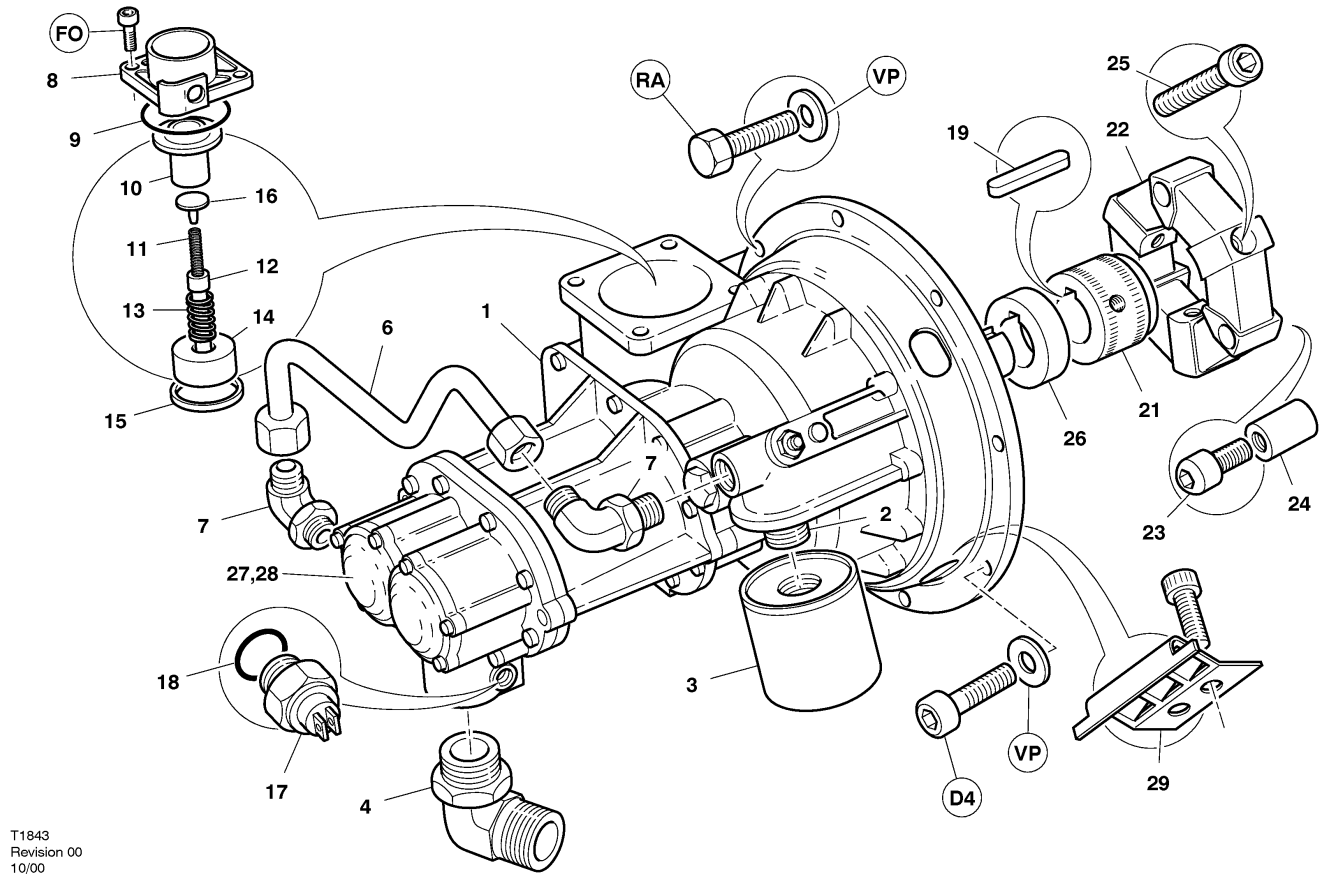

Item	ccn	Qty.	Description
1	36007813	1	Airend
	36007847	1	Airend (HP95)
2	35372986	1	Nipple
3	36897353	1	Element, oil filter
4	35374867	1	Elbow
5	–		
6	36764553	1	Tube assembly
7	35286491	2	Elbow
8	36508471	1	Cover
9	95023107	1	‘O’ Ring
10	35611623	1	Valve
11	35376342	1	Spring
12	35611557	4	Stem
13	35376334	1	Spring
14	35611615	1	Piston
15	35376359	1	Seal
16	35379817	1	Clip, retaining
17	35596436	1	Switch, temperature
18	39404165	1	‘O’ Ring

Item	ccn	Qty.	Description
19	35317379	1	Key
*20	35375369	2	Lipseal, driveshaft
21–24	54495700	1	Coupling assembly 7/31
	54612213	1	Coupling assembly 7/41
21	54519665	1	Hub
22	92970633	1	Element 7/31
	92118504	1	Element 7/41
23	54602057	4	Pin, locating
24	54602065	4	Stud
25	92118520	3	Screw
26	92789080	2	Spacer
27	36506442	1	Cover
28	95023115	1	‘O’ Ring
29	93151413	3	Cover
*30	95022331	1	‘O’ Ring

3IRL4N – ENGINE GASKET KIT

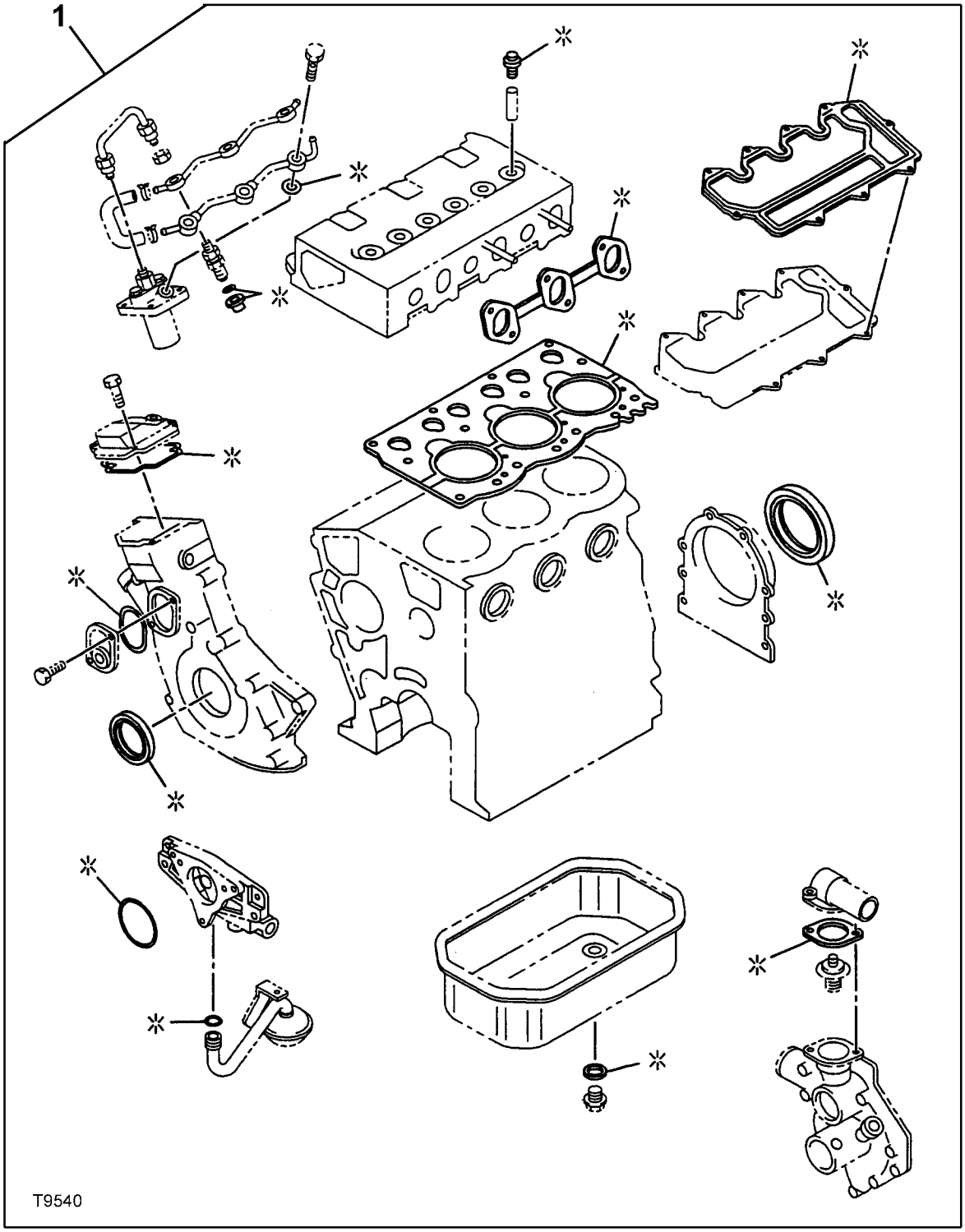

Item	ccn	Qty.	Description	Item	ccn	Qty.	Description
1	49840853	1	Kit, gasket/'O' Ring				

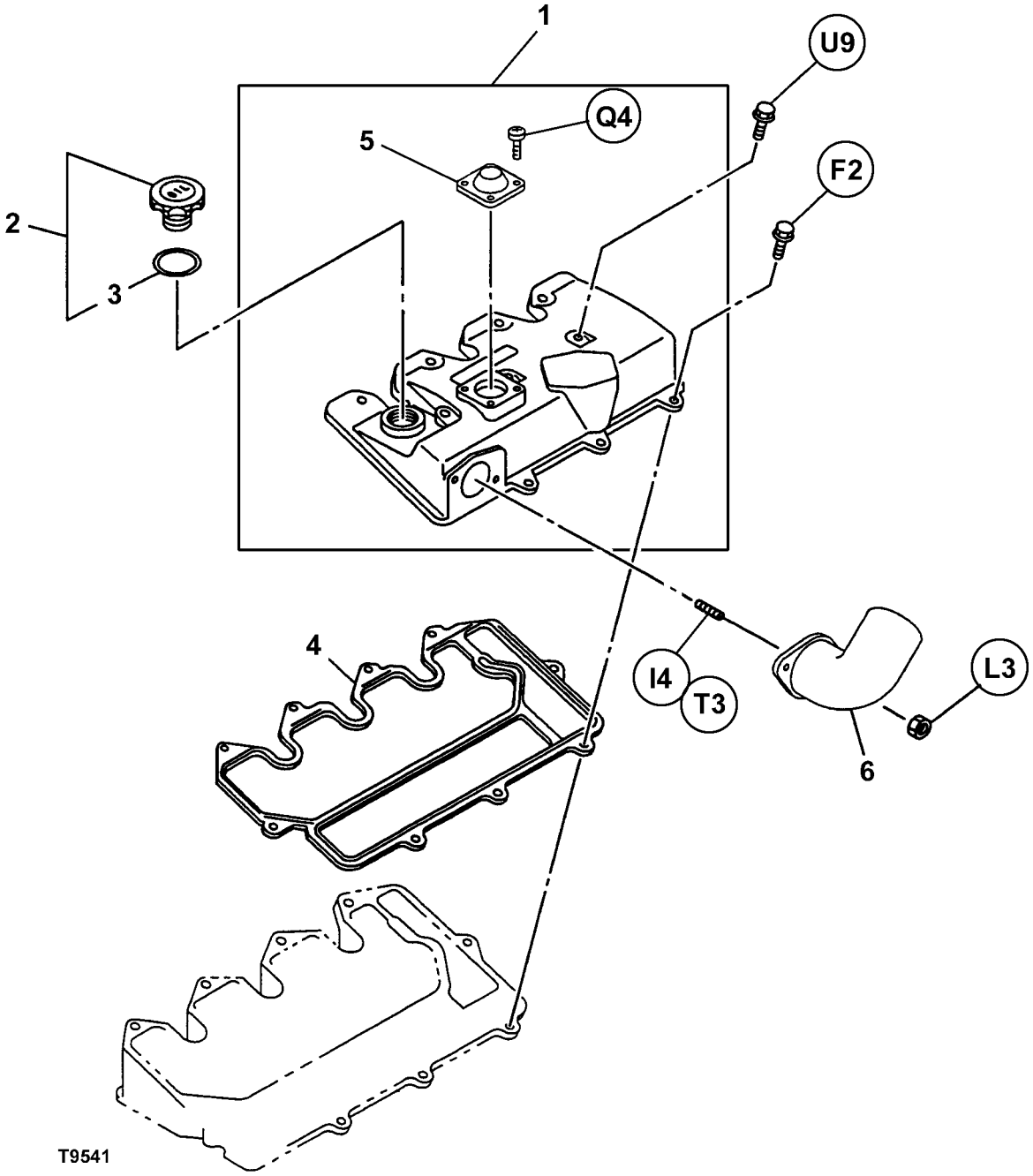

Item	ccn	Qty.	Description	Item	ccn	Qty.	Description
1	49849219	1	Cover	5	54429717	1	Valve PLV
2	54385984	1	Cap	6	49841281	1	Pipe
3	88080767	1	Gasket				
4	49840879	1	Gasket Part of kit 49840853				

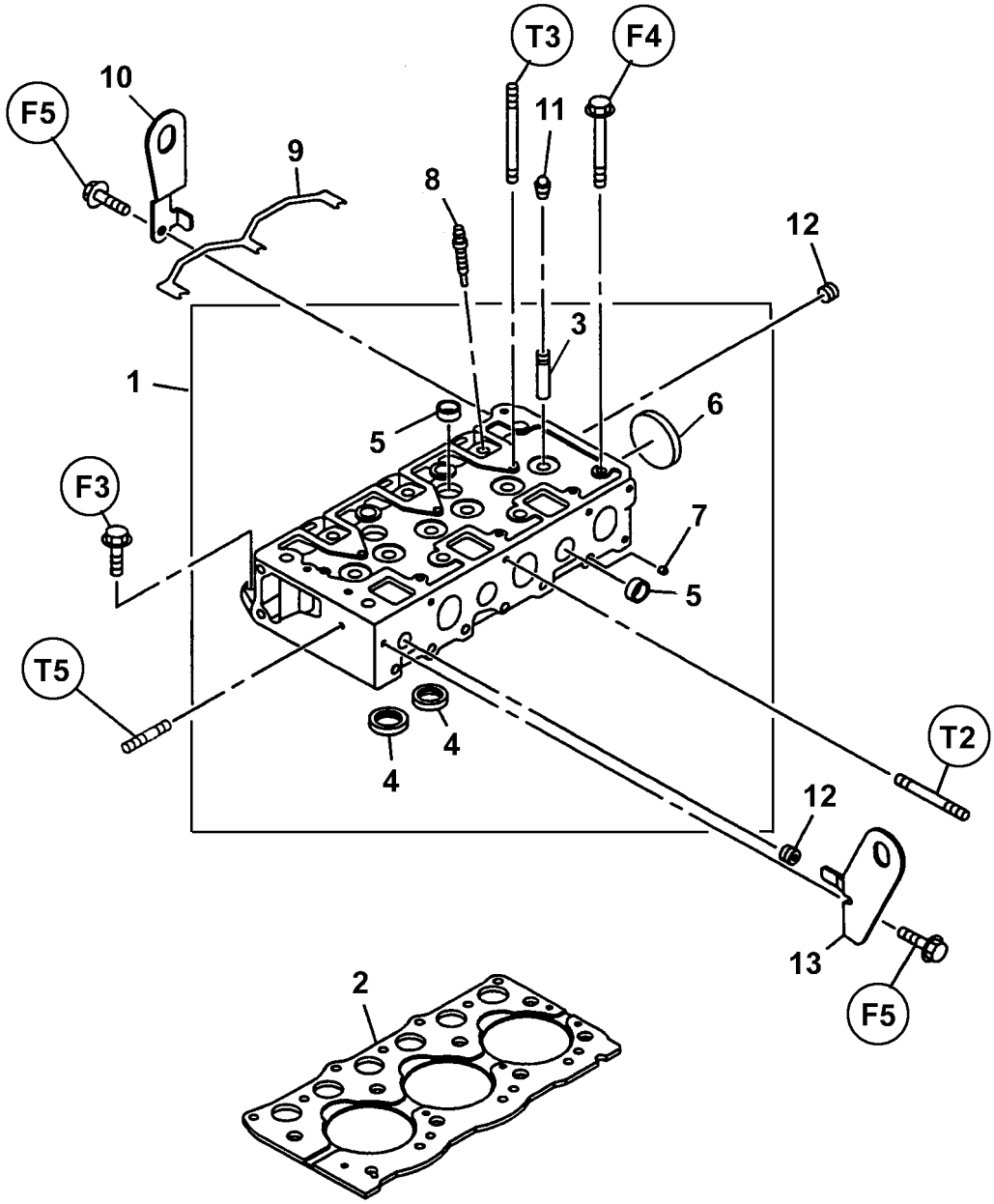

Item	ccn	Qty.	Description
1	49841638	1	Cylinder head assembly
2	49840960	1	Gasket Part of kit 49840853
3	49808009	6	Guide
4a	49840887	3	Seat, valve insert (Inlet)
4b	49840895	3	Seat, valve insert (Exhaust)
5	88081906	4	Cup, sealing
6	88080353	1	Cup, sealing
7	49841414	4	Cup, sealing
8	54385893	3	Glowplug
9	49841653	1	Connector
10	49809049	1	Hanger
11	49807324	6	Seal Part of kit 49840853
12	88080494	1	Plug
13	49809031	1	Hanger

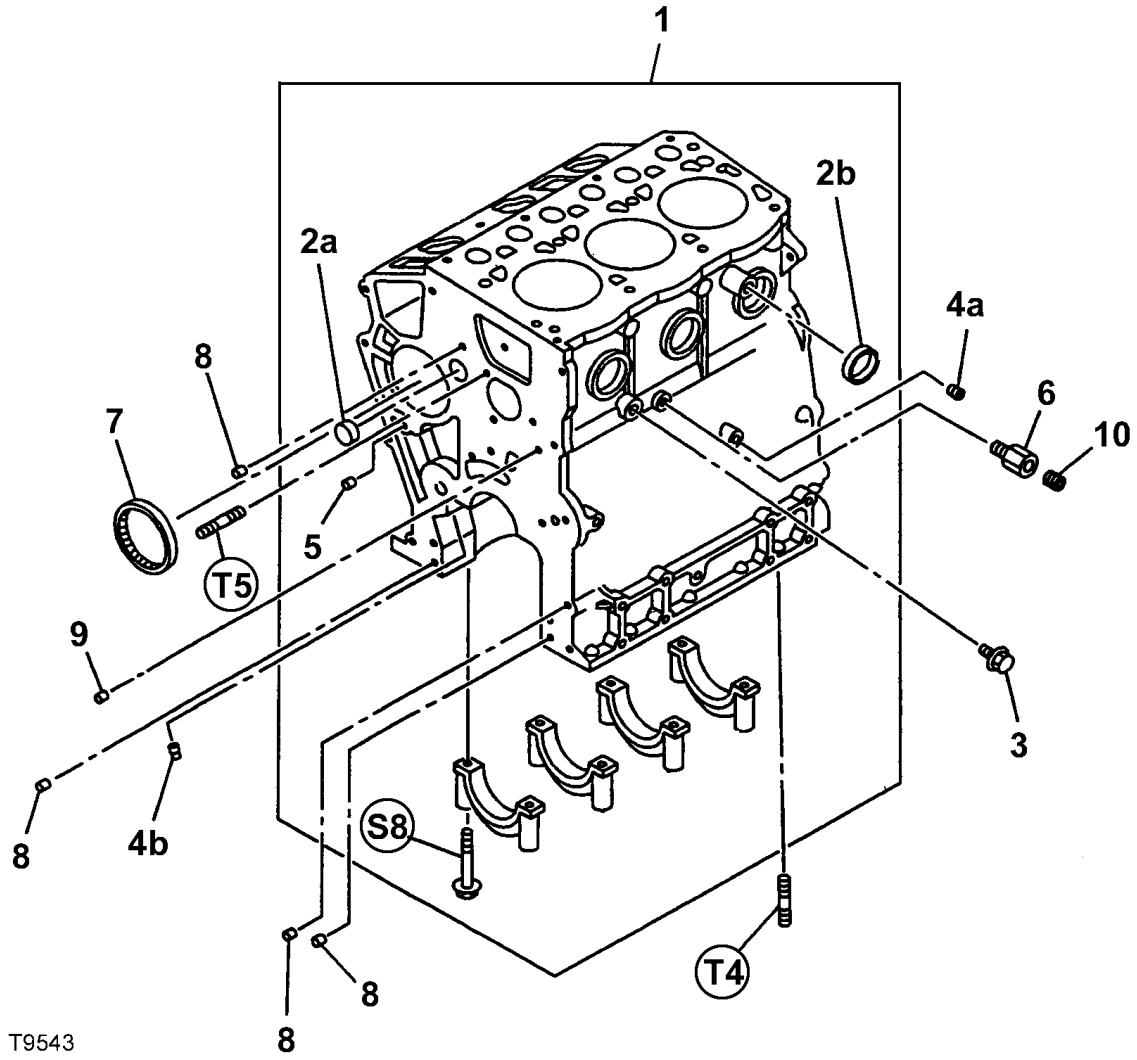

Item	ccn	Qty.	Description	Item	ccn	Qty.	Description
1	49841695	1	Cylinder block assembly	5	88080486	4	Cup, sealing
2a	88081906	4	Cup, sealing	6	49841729	1	Adaptor
2b	49807605	1	Cup, sealing	7	49808595	1	Bearing
3	88082664	1	Plug	8	49849227	4	Dowel
4a	49807001	1	Plug	9	88080486	1	Cap
4b	54530522	1	Plug	10	49849318	1	Plug

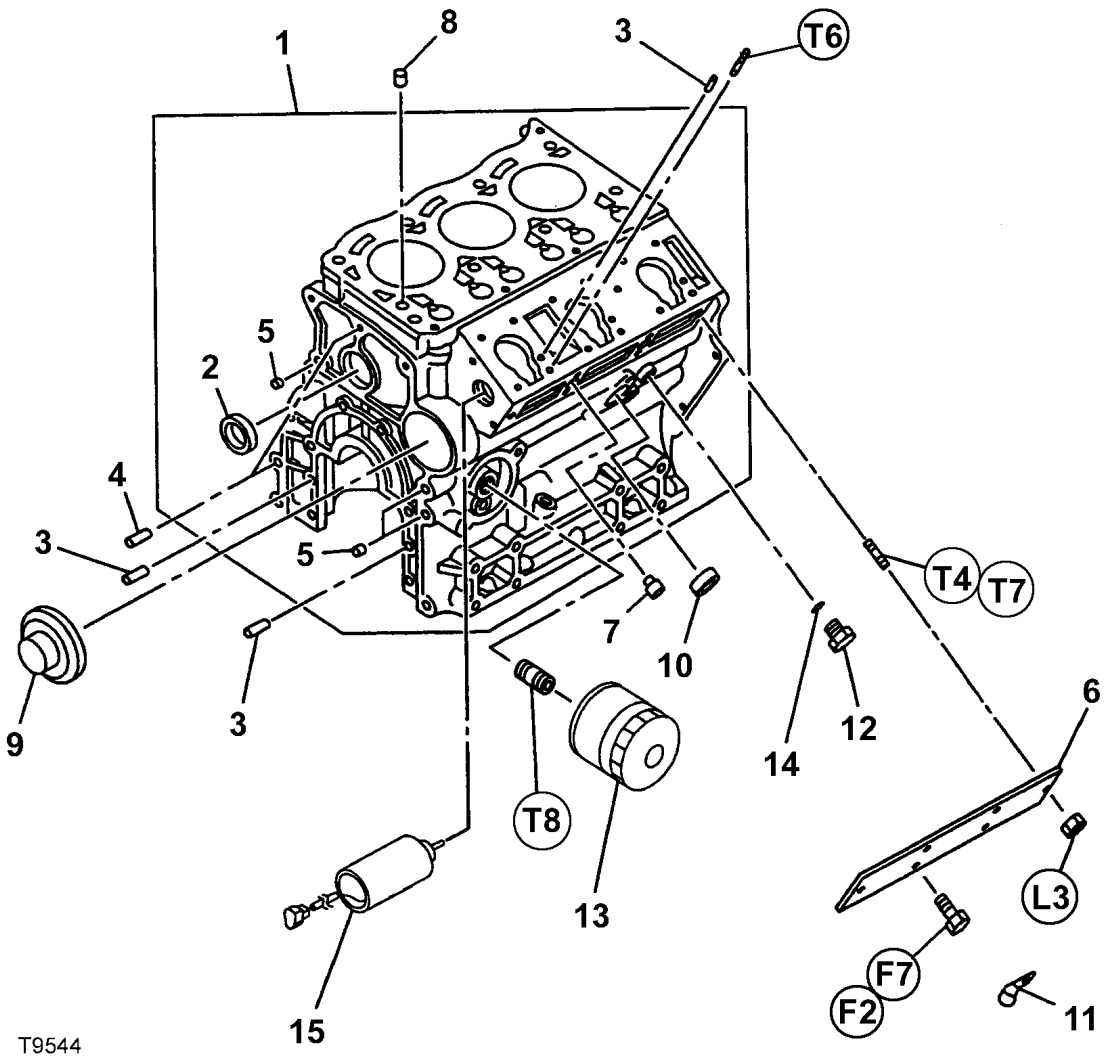

Item	ccn	Qty.	Description	Item	ccn	Qty.	Description
1	49841695	1	Cylinder block assembly	9	49808603	1	Plug
2	49807605	4	Cup, sealing	10	88080569	1	Cap
3a	49849037	2	Pin	11	49849136	1	Clip, retaining
3b	49849029	3	Pin	12	49807142	1	Plug
4	49849037	2	Pin	13	54429675	1	Element, oil filter
5	88080486	2	Cup, sealing	14	88082607	1	Gasket Part of kit 49840853
6	49841596	1	Cover				
7	49808348	2	Pin	15	54430707	1	Solenoid, stop
8	49807589	2	Dowel				

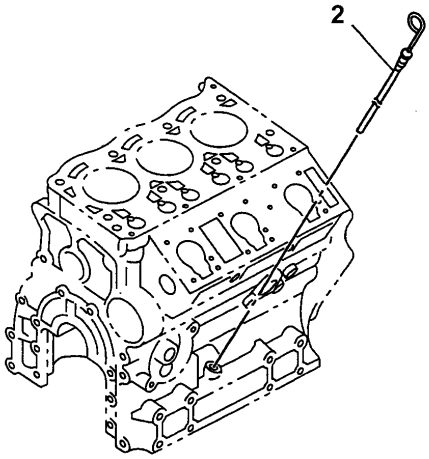

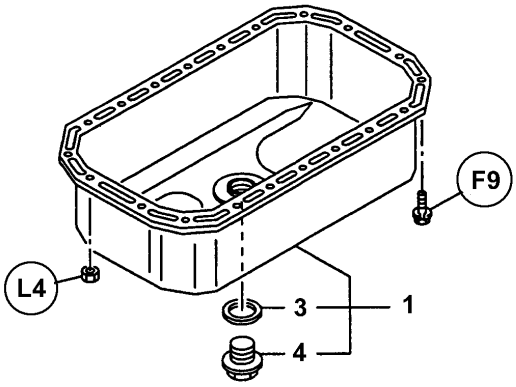

Item	ccn	Qty.	Description	Item	ccn	Qty.	Description
1	49841570	1	Oil pan assembly	3	88080395	1	Gasket Part of kit 49840853
2	49841240	1	Gauge, oil level	4	88082656	1	Plug

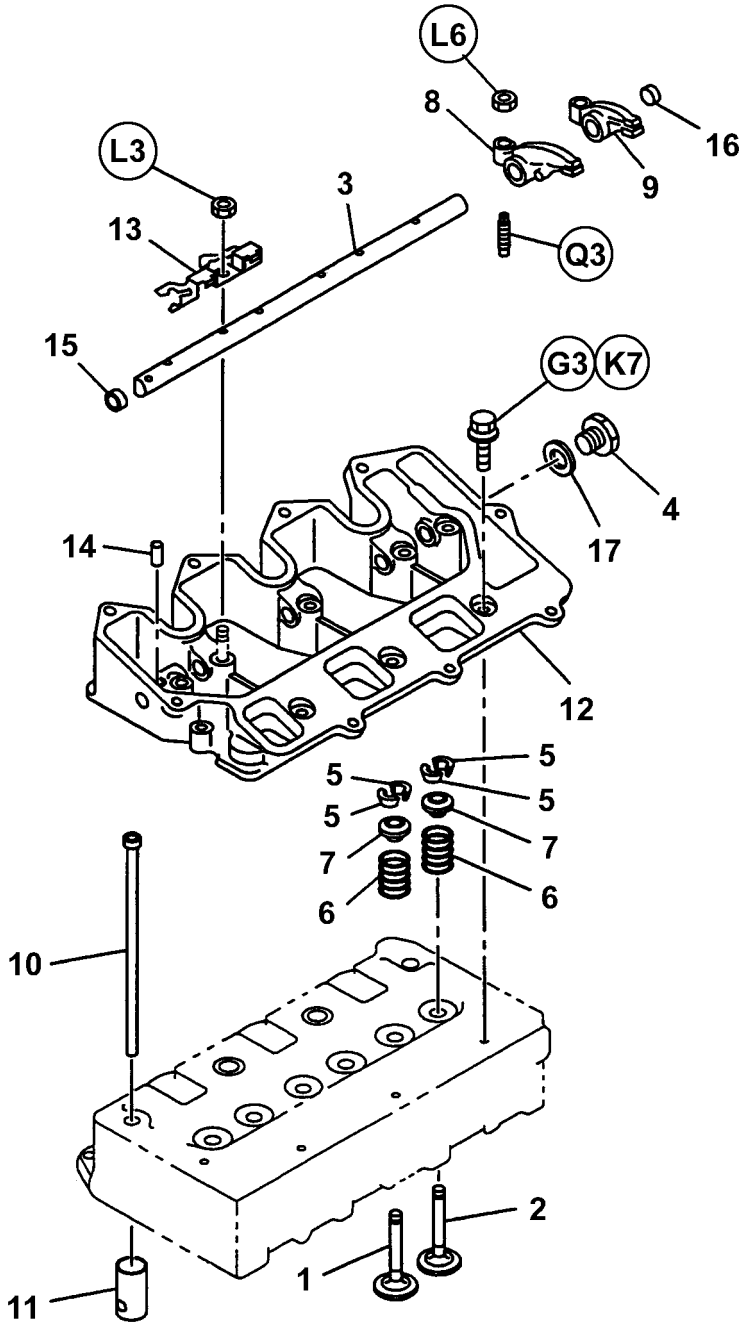

T9546

Item	ccn	Qty.	Description	Item	ccn	Qty.	Description
1	49840978	3	Valve, inlet	10	49840937	6	Rod
2	49840911	3	Valve, exhaust	11	49809460	6	Tappet
3	49841547	1	Shaft	12	49841646	1	Bracket
4	49849284	1	Plug	13	49840945	3	Spring
5	49807621	12	Collar	14	49849003	1	Pin
6	49808199	6	Spring	15	88080486	1	Cup, sealing
7	49807670	6	Seat	16	49808355	1	Cup, sealing
8	49809825	3	Arm, rocker (Inlet)	17	88082565	1	Gasket Part of kit 49840853
9	49809833	3	Arm, rocker (Exhaust)				

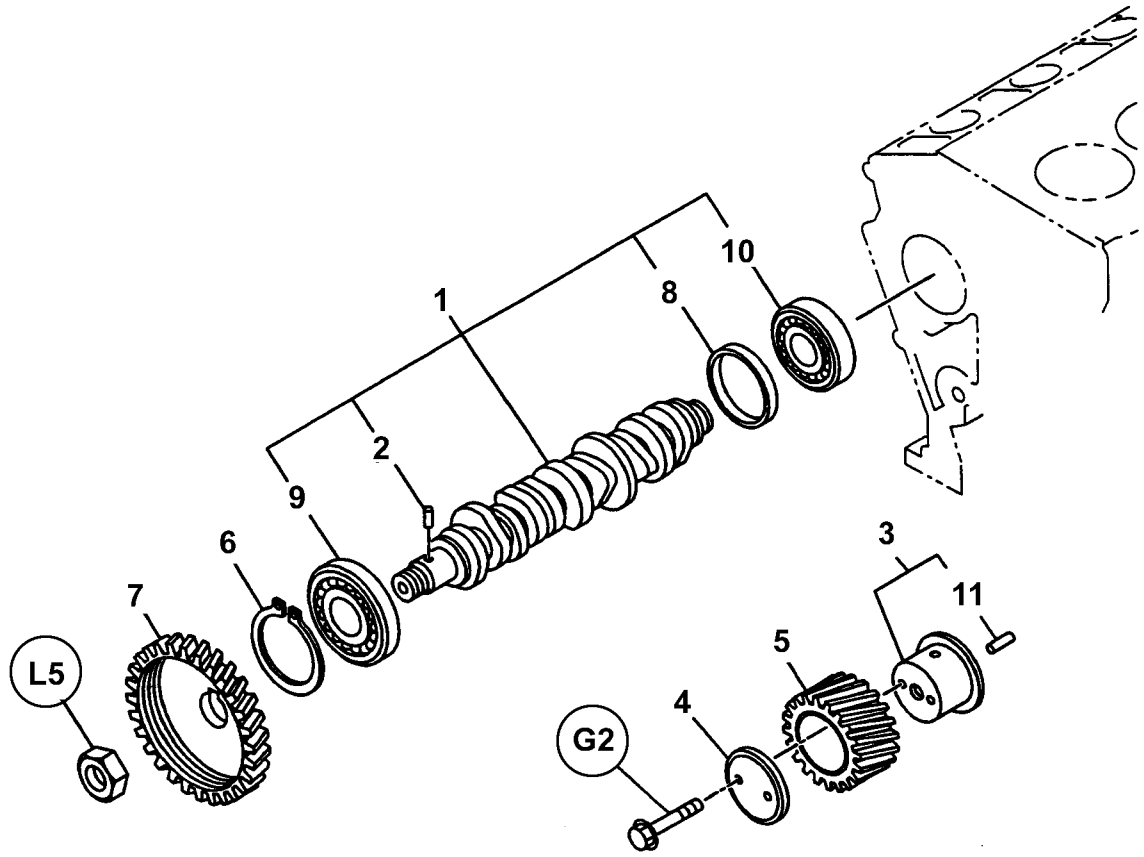

T9547

Item	ccn	Qty.	Description	Item	ccn	Qty.	Description
1	54643515	1	Camshaft	7	49841216	1	Gear
2	49849193	1	Pin	8	49808645	1	Ring
3	49809593	1	Shaft	9	49809908	1	Bearing
4	49807241	1	Collar	10	49809916	1	Bearing
5	49841349	1	Gear	11	49841497	1	Pin
6	49849110	1	Ring snap				

3IRL4N – CRANKSHAFT, PISTON AND FLYWHEEL

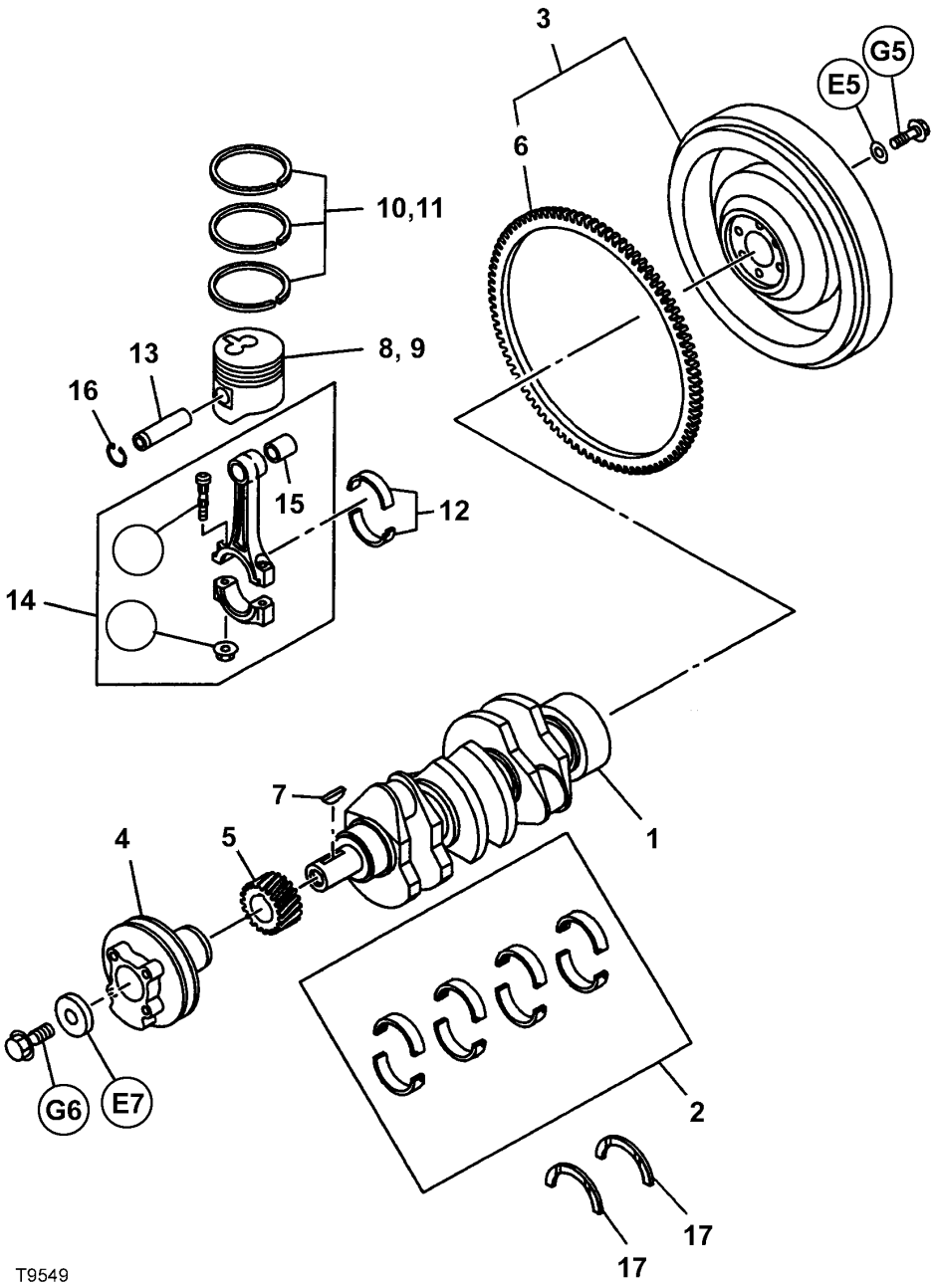

Item	ccn	Qty.	Description	Item	ccn	Qty.	Description
1	54430665	1	Crankshaft	10	49841612	3	Ring set
2	49841539	1	Kit, metal	11	49841620	3	Ring set
				12	49840804	3	Kit, metal
3	49841562	1	Flywheel				
4	49841687	1	Pulley	13	49840796	3	Pin
5	49808041	1	Gear	14	49840929	3	Rod, assembly, connecting
6	49807811	1	Gear	15	49841224	3	Bush
7	49807597	1	Key	16	49840788	6	Ring snap
8	49841711	3	Piston	17	49840739	1	Kit, metal
9	49809387	3	Piston				

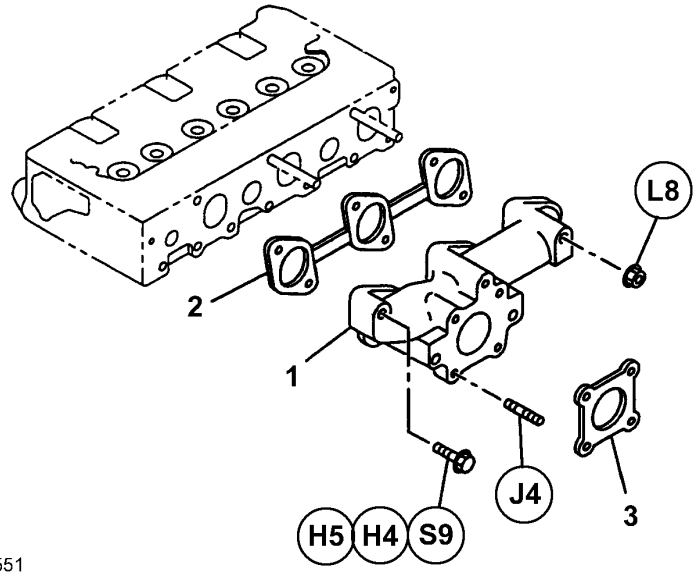

Item	ccn	Qty.	Description	Item	ccn	Qty.	Description
1	49808017	1	Manifold, exhaust				
2	49808306	1	Gasket, exhaust manifold Part of kit 49840853				
3	49808447	1	Gasket				

3IRL4N – WATER PUMP AND CORROSION RESISTOR

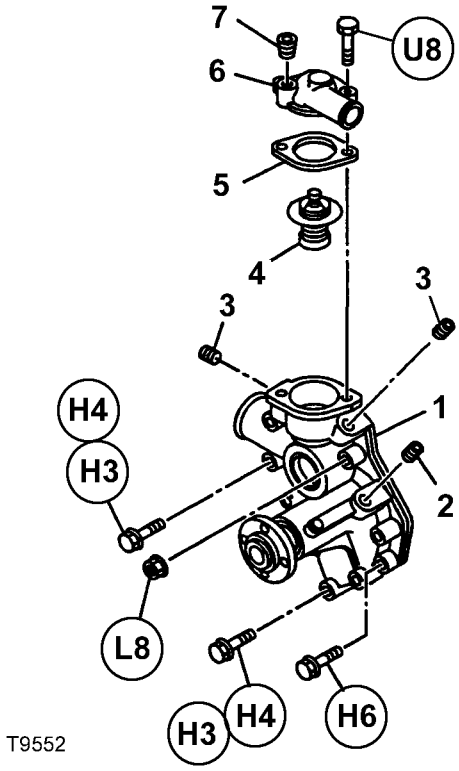

Item	ccn	Qty.	Description	Item	ccn	Qty.	Description
1	49841448	1	Pump assembly	5	54385851	1	Gasket Part of kit 49840853
2	88080494	1	Plug	6	49841075	1	Pipe
3	49840861	2	Plug	7	88080494	1	Plug
4	54385836	1	Thermostat				

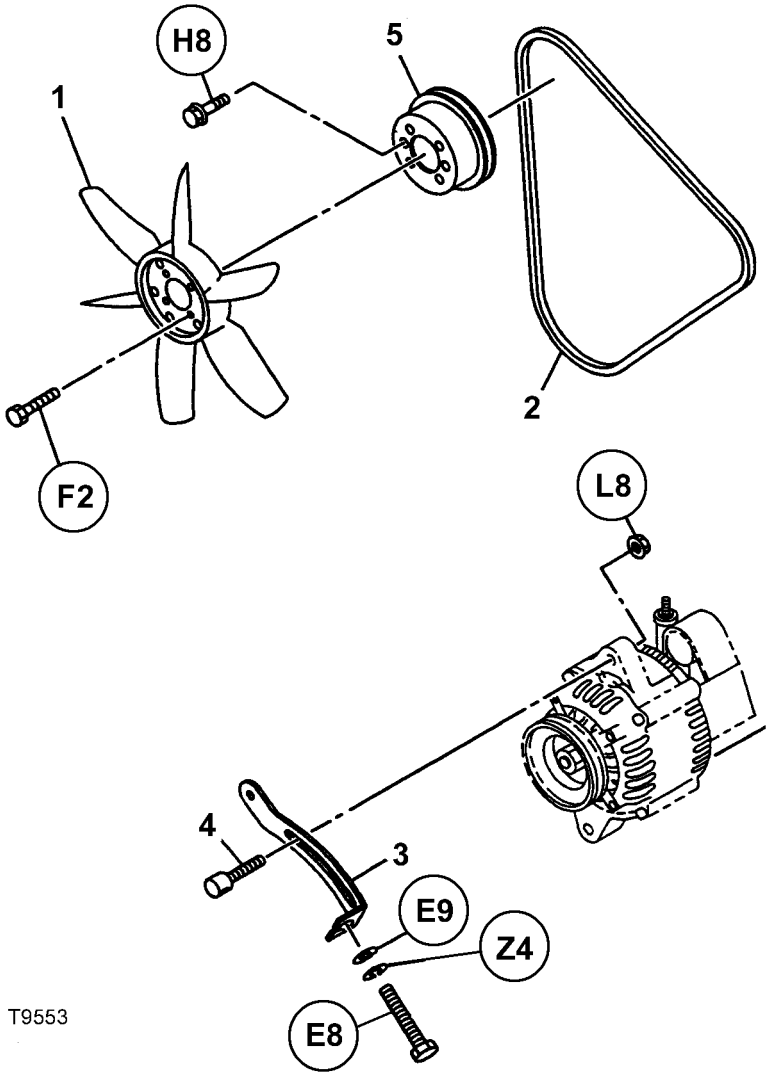

Item	ccn	Qty.	Description	Item	ccn	Qty.	Description
1	49840770	1	Fan	4	88081757	1	Piece, sliding
2	54526801	1	Belt, fan	5	49809858	1	Pulley
3	49809882	1	Plate				

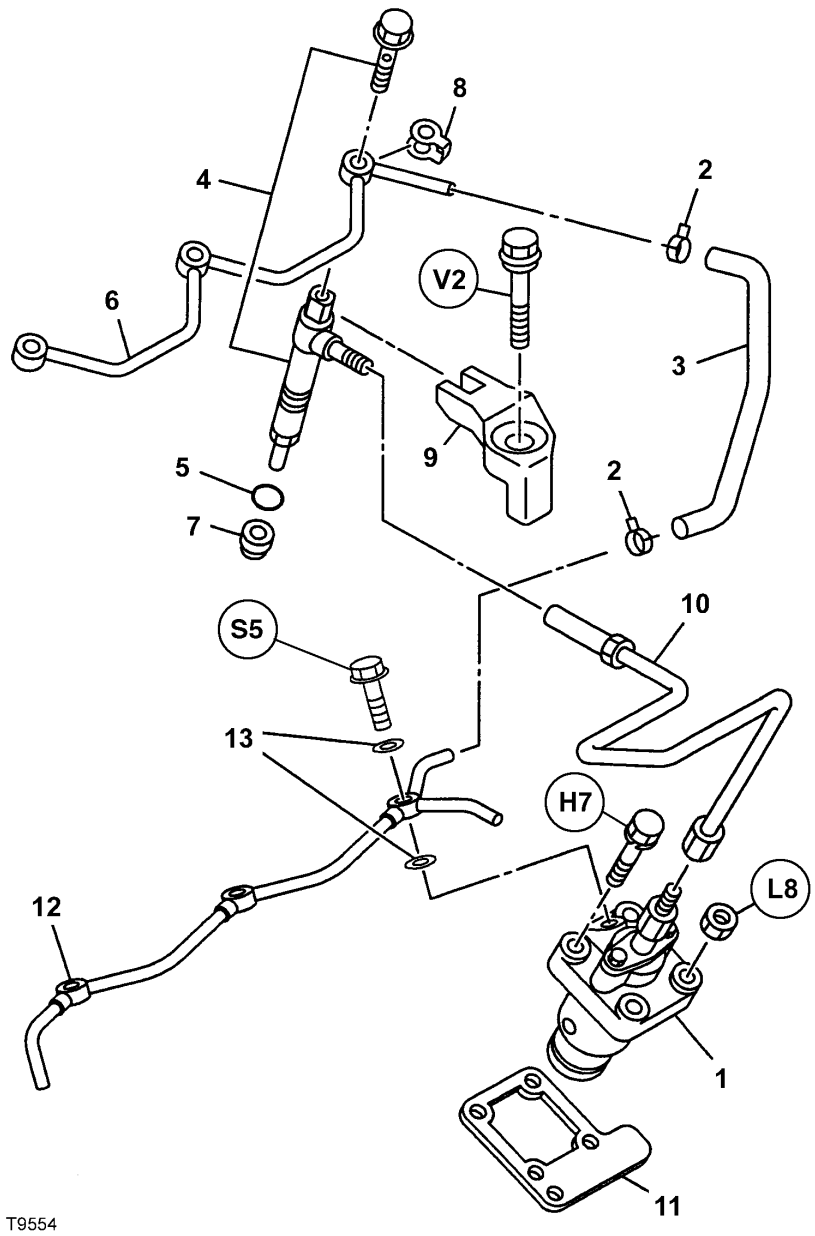

Item	ccn	Qty.	Description
1	49841331	3	Pump assembly
2	49807183	2	Clip, hose
3	49841315	1	Hose
4	49841323	3	Nozzle, injector
5	54385935	3	Gasket Part of kit 49840853
6	49841661	1	Pipe
7	54385950	3	Gasket Part of kit 49840853
8	49841380	3	Gasket Part of kit 49840853
9	49841166	3	Bracket
10	49808165	3	Pipe assembly
11	49809494		Shim T=0.2
11	49809502		Shim T=0.3
11	49809510		Shim T=0.4
11	49809528		Shim T=0.5
11	49809536		Shim T=0.6
11	49809544		Shim T=0.7
11	49809551		Shim T=0.8
11	49809569		Shim T=1.0
11	49809577		Shim T=1.2
12	54430566	1	Pipe
13	54430715	2	Gasket Part of kit 49840853

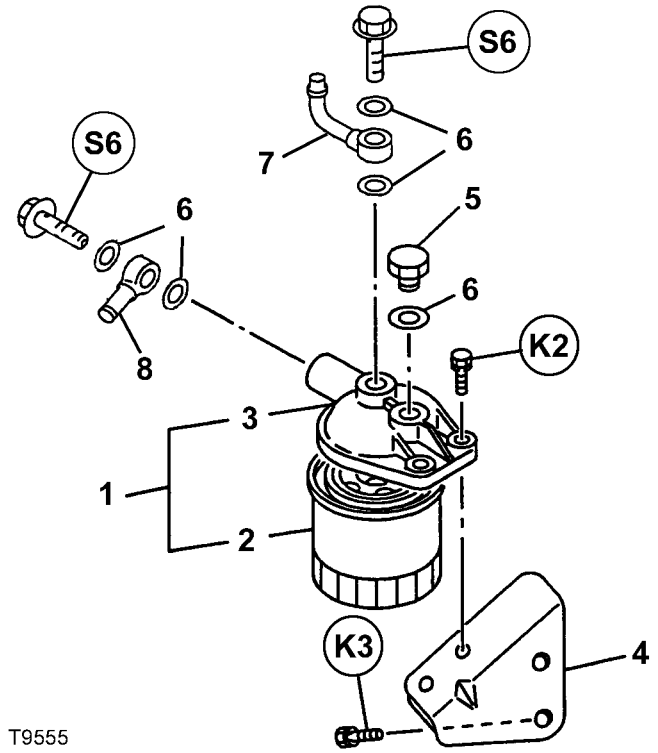

Item	ccn	Qty.	Description	Item	ccn	Qty.	Description
1		1	Filter assembly	5	49849284	1	Plug
2	54381306	1	Element, fuel filter	6	88082607	5	Gasket
3	88080643	1	Cover	7	49807167	1	Tube assembly
4	49809379	1	Bracket	8	49807456	1	Tube assembly

3IRL4N – FUEL PUMP AND PIPE

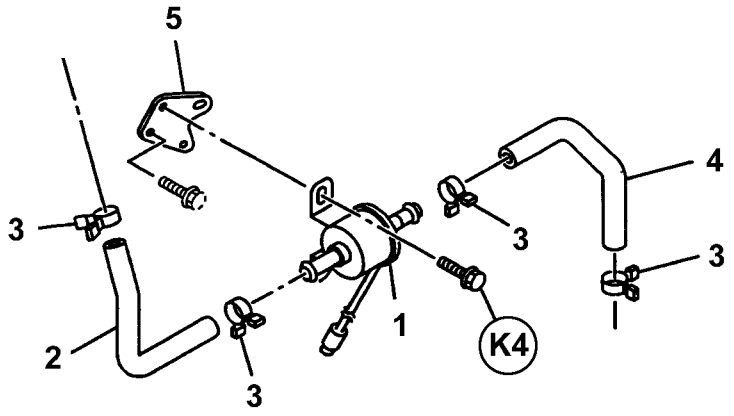

T9556

Item	ccn	Qty.	Description	Item	ccn	Qty.	Description
1	49809809	1	Fuel pump assembly	3	49807175	4	Clip, hose
				4	49809395	1	Hose
2	49809403	1	Hose	5	49809387	1	Bracket

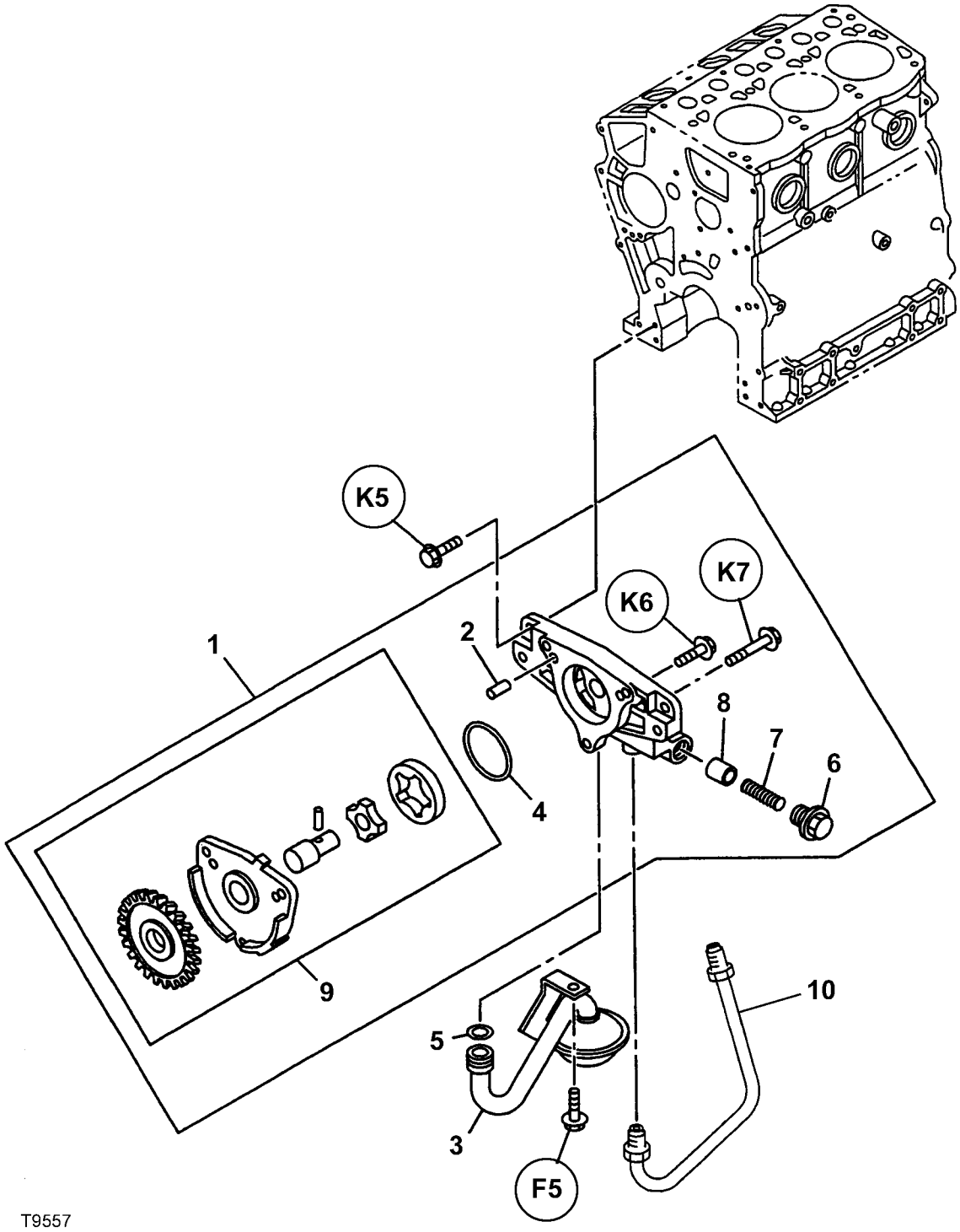

Item	ccn	Qty.	Description	Item	ccn	Qty.	Description
1	49808611	1	Oil pump assembly	6	49807290	1	Plug
2	49849029	2	Pin	7	49809429	1	Spring
3	49841588	1	Filter assembly	8	49807613	1	Valve, relief
4	49809338	1	Gasket Part of kit 49840853	9	49808546	1	Oil pump sub assembly
5	49807027	1	Gasket Part of kit 49840853	10	49840903	1	Pipe

3IRL4N – ENGINE ELECTRICAL CONTROL PARTS

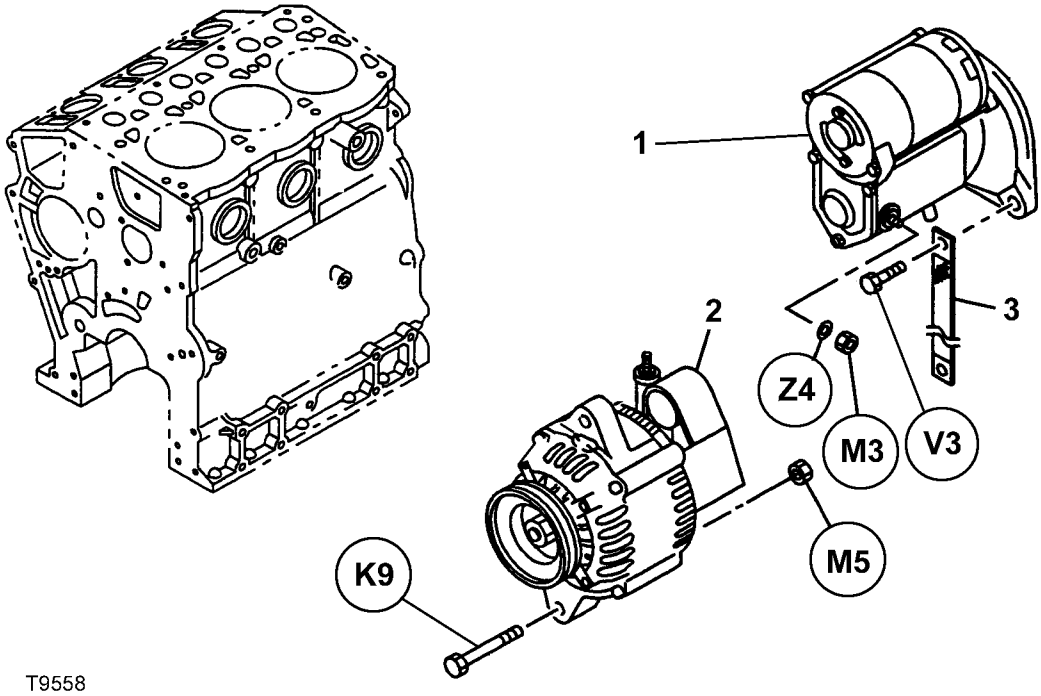

Item	ccn	Qty.	Description	Item	ccn	Qty.	Description
1	49849086	1	Starter assembly 12V–1.4kW				
2	49809841	1	Generator 12V–35A				
3	49841513	1	Cable, earth				

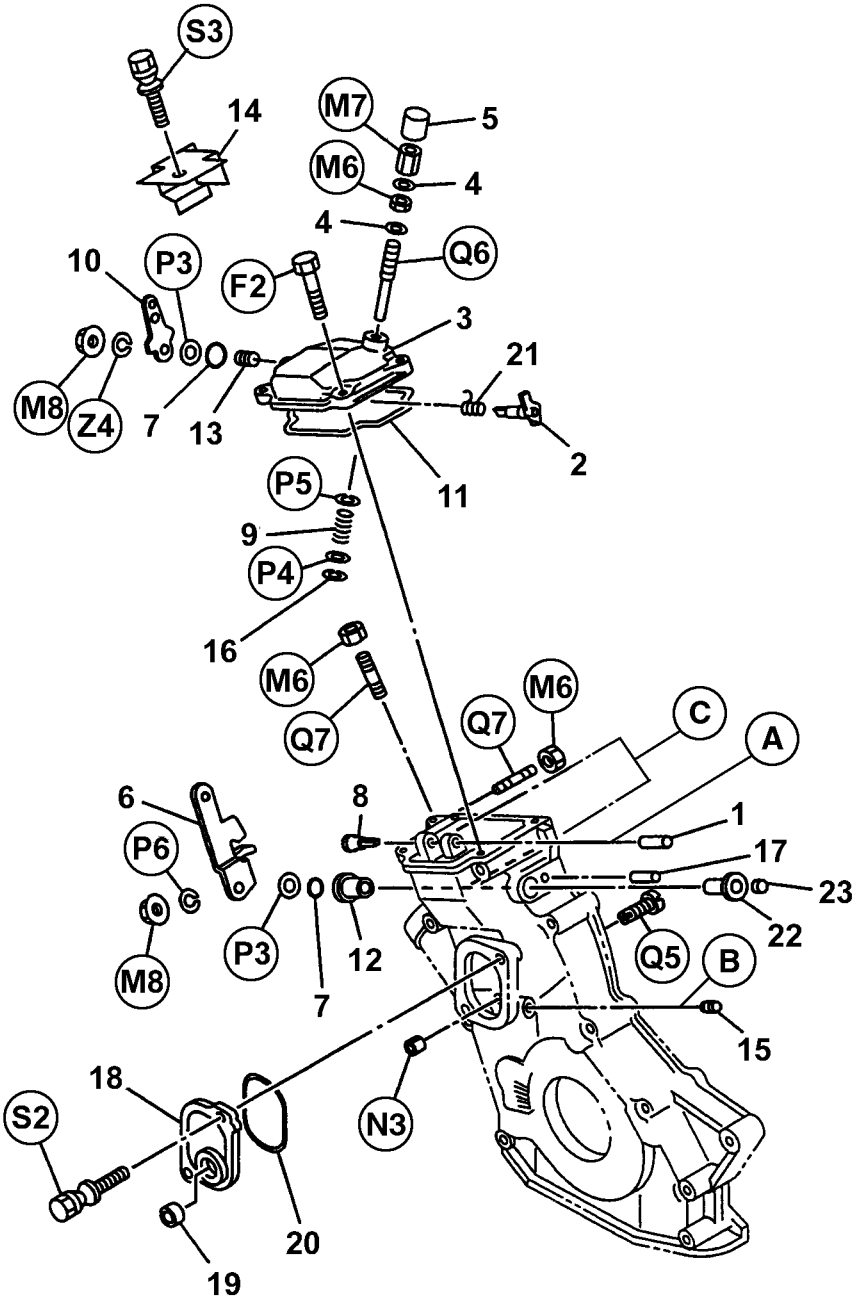

Item	ccn	Qty.	Description
1	49849045	1	Shaft
2	49807910	1	Shaft
3	49841125	1	Cover
4	49807126	2	Gasket Part of kit 49840853
5	49807266	1	Cap
6	49808637	1	Lever
7	49807019	2	Gasket Part of kit 49840853
8	49807274	1	Eye
9	49807936	1	Spring
10	49807928	1	Lever
11	49808702	1	Gasket Part of kit 49840853
12	49807753	1	Bush
13	49807001	1	Plug
14	49809486	2	Cover
15	88080379	1	Plug
16	49849128	1	Ring
17	49809999	1	Pin
18	49841257	1	Cover
19	88080544	1	Cup, sealing
20	49841265	1	Gasket Part of kit 49840853
21	49808363	1	Spring
22	49808322	1	Bush
23	49807845	1	Cup, sealing
A			See next page
B			See next page
C			See next page

3IRL4N – TIMING GEAR CASE

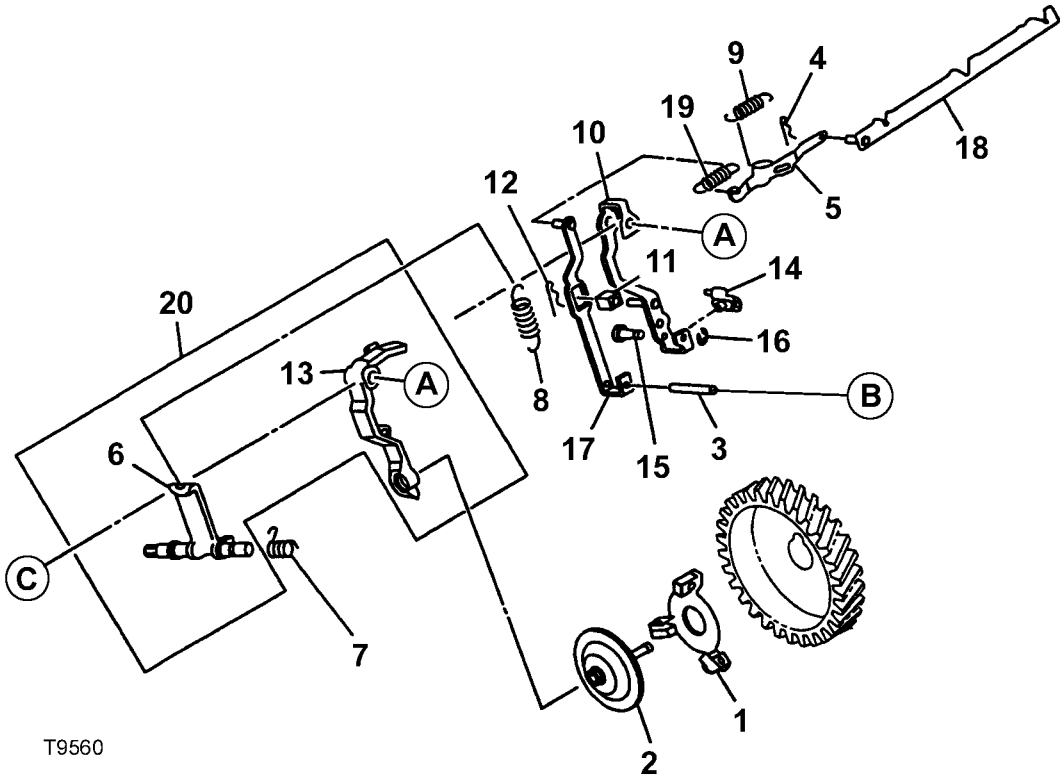

Item	ccn	Qty.	Description	Item	ccn	Qty.	Description
1	49808579	1	Flyweight	13	49808223	1	Lever
2	49809684	1	Sleeve	14	49808231	1	Shifter
3	49849011	1	Shaft	15	49849052	1	Shaft
4	49807043	1	Pin	16	88082524	1	Ring
5	49809700	1	Plate	17	49809692	1	Lever
6	49808256	1	Lever	18	49841604	1	Link
7	49807944	1	Spring	19	49808975	1	Spring set
8	49841554	1	Spring	20	49809114	1	Kit, lever
9	49808983	1	Spring	A			See previous page
10	49808058	1	Lever	B			See previous page
11	49809411	1	Guide	C			See previous page
12	49807043	1	Pin				

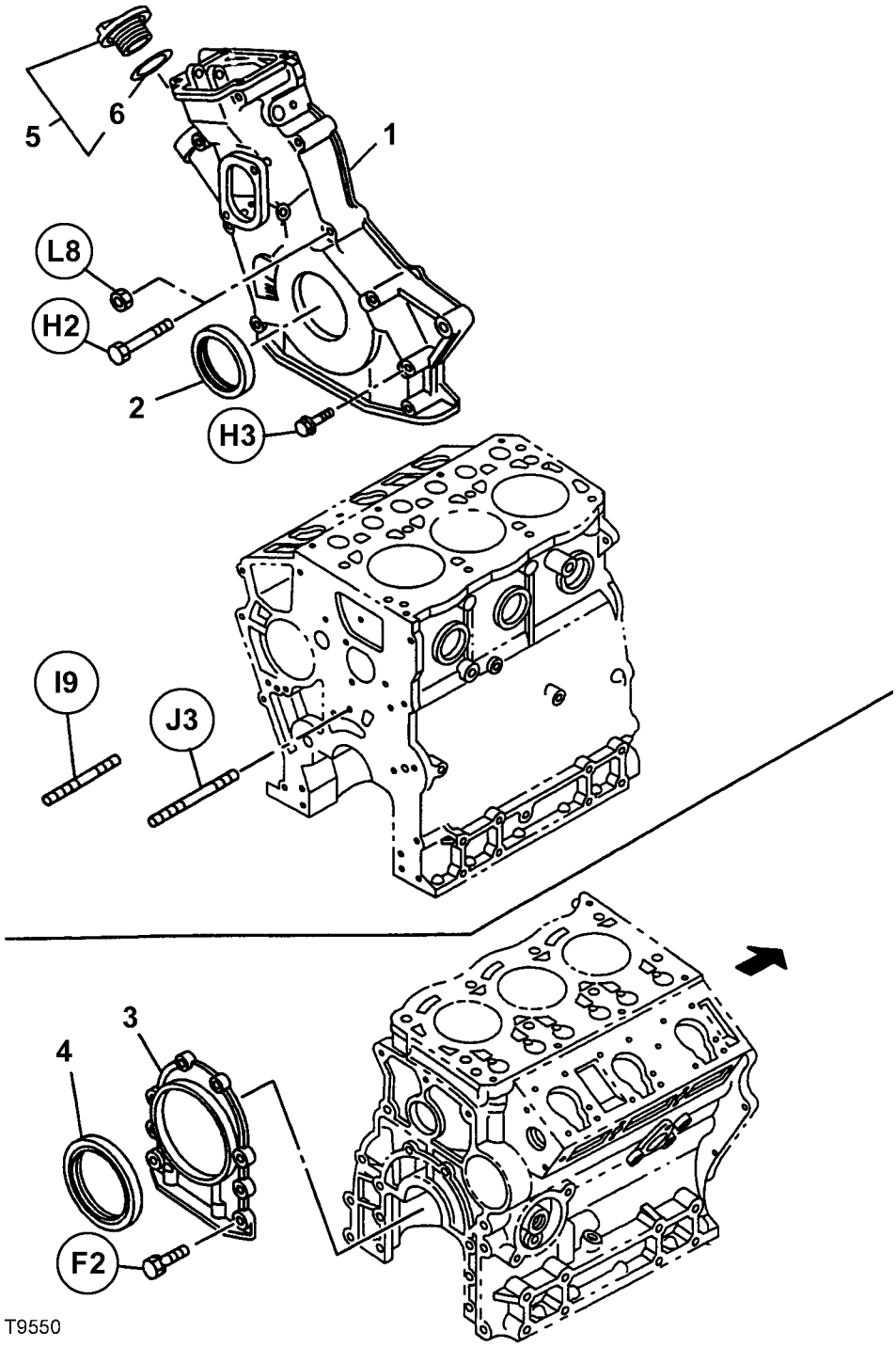

Item	ccn	Qty.	Description	Item	ccn	Qty.	Description
1	49841273	1	Cover, timing gear	4	49807159	1	Seal Part of kit 49840853
2	88080510	1	Seal Part of kit 49840853	5	49807829	1	Cap
3	49808538	1	Retainer	6	88080767	1	Gasket

4IRL5N – ENGINE GASKET KIT

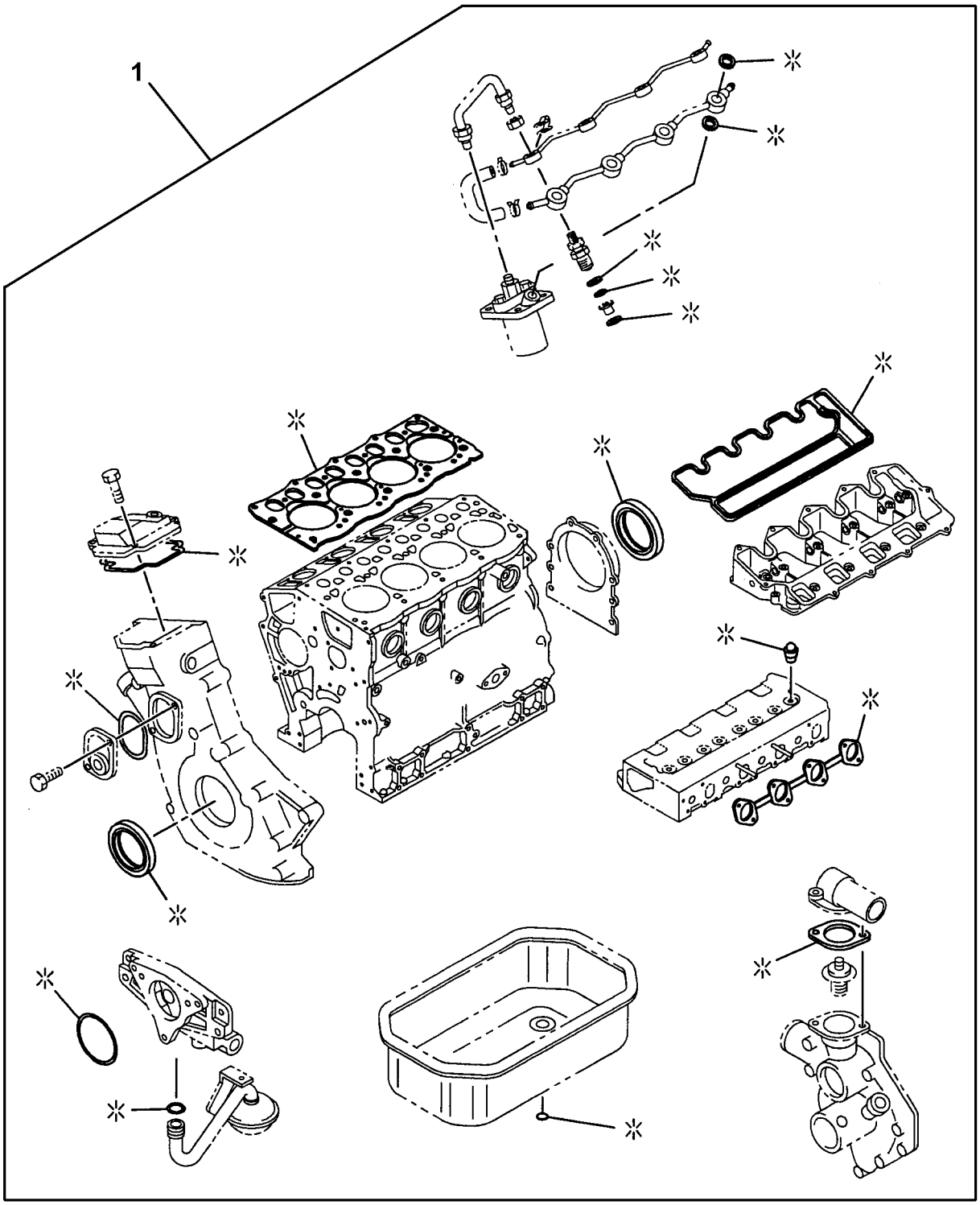

T9570

Item	ccn	Qty.	Description	Item	ccn	Qty.	Description
1	49840762	1	Kit, gasket/'O' Ring				

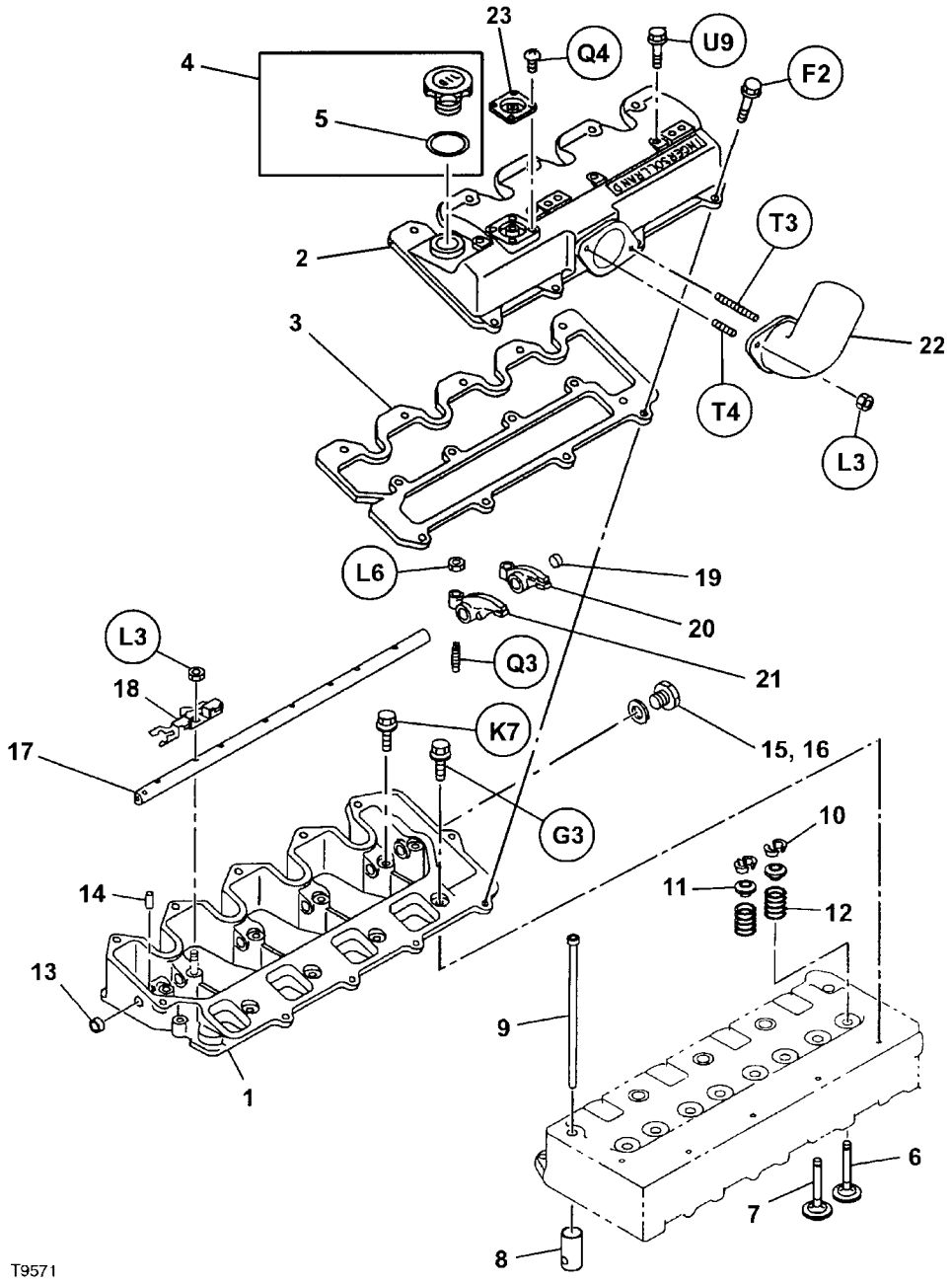

Item	ccn	Qty.	Description
1	49841174	1	Bracket
2	49841430	1	Cover
3	49841182	1	Gasket Part of kit 49840762
4	54385984	1	Cap
5	88080767	1	Gasket
6	49840911	4	Valve, exhaust
7	49840978	4	Valve, inlet
8	49809460	8	Tappet
9	49840937	8	Rod
10	49807621	16	Collar
11	49807670	8	Seat
12	49808199	8	Spring
13	88080486	1	Cup, sealing
14	49849003	1	Pin
15	88082565	1	Gasket Part of kit 49840762
16	49849284	1	Plug
17	49841034	1	Shaft
18	49840945	4	Spring
19	49808355	1	Cup, sealing
20	49809833	4	Arm, rocker (Exhaust)
21	49809825	3	Arm, rocker (Inlet)
22	49841281	1	Pipe
23	54429717	1	Valve PCV

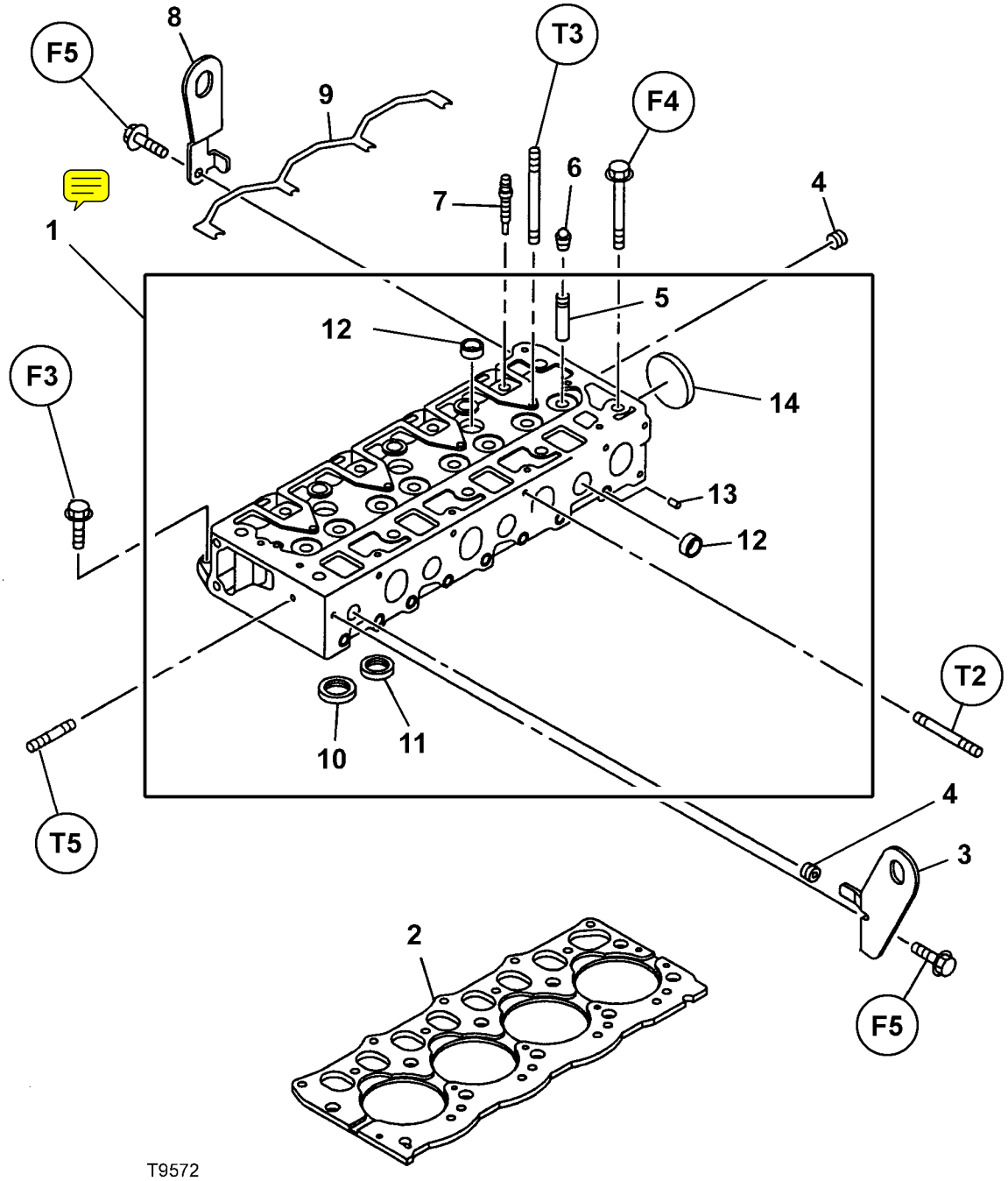

Item	ccn	Qty.	Description
1	49841157	1	Cylinder head assembly
2	49841422	1	Gasket Part of kit 49840762
3	49809031	1	Hanger
4	88080494	1	Plug
5	49808009	8	Guide
6	49807324	8	Seal Part of kit 49840762
7	54385893	4	Glowplug
8	49809049	1	Hanger
9	49841356	1	Connector
10	49840895	4	Seat, valve insert (Exhaust)
11	49840887	4	Seat, valve insert (Inlet)
12	88081906	6	Cup, sealing
13	49841414	5	Cup, sealing
14	88080353	1	Cup, sealing

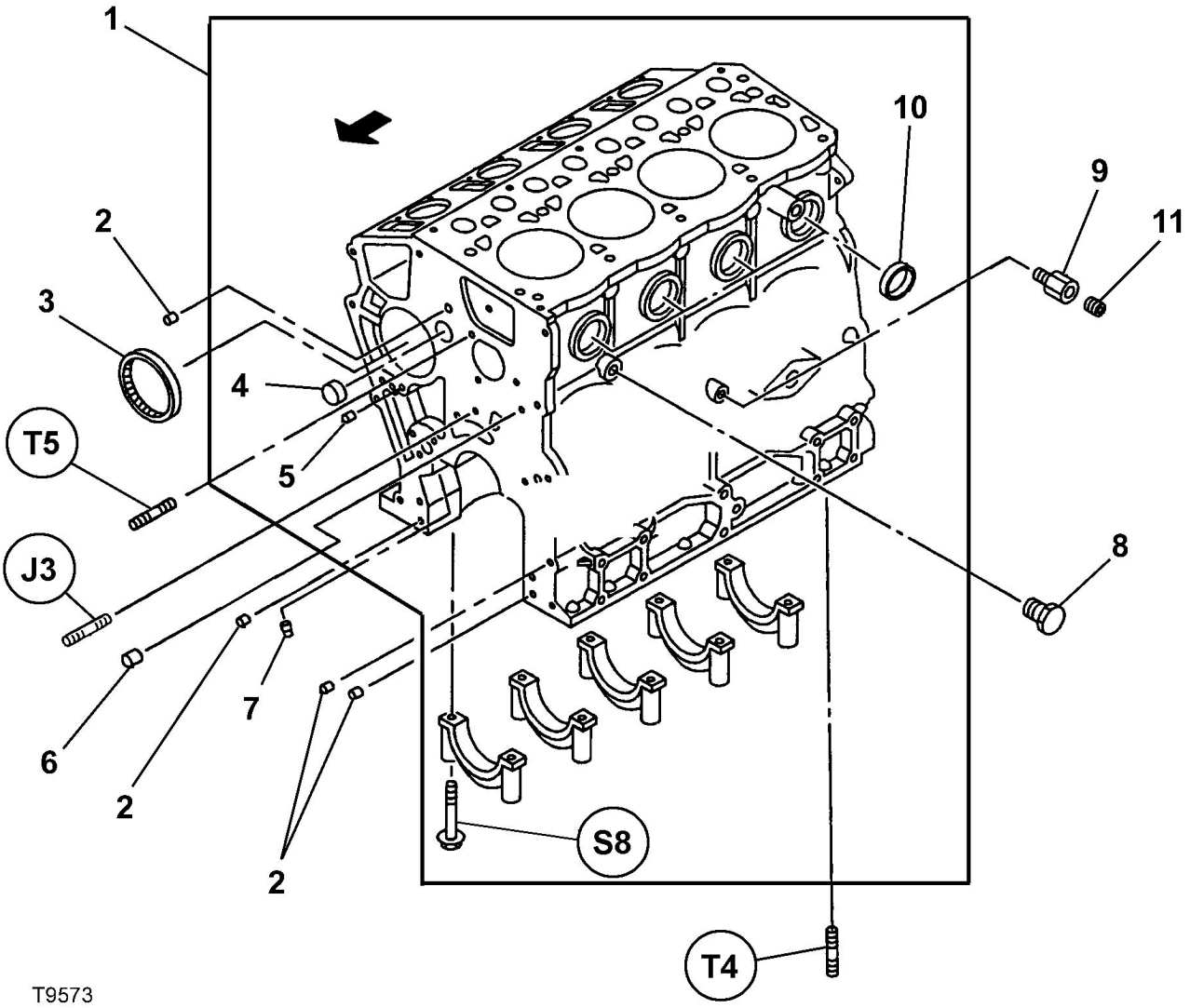

Item	ccn	Qty.	Description	Item	ccn	Qty.	Description
1	49841372	1	Cylinder block assembly	6	54530522	1	Plug
2	49849227	4	Dowel	7	88082664	4	Plug
3	49808595	1	Bearing	8	49849318	1	Plug
4	88081906	1	Cup, sealing	9	49841455	1	Adaptor
5	49849219	1	Cup, sealing	10	49807605	4	Cup, sealing

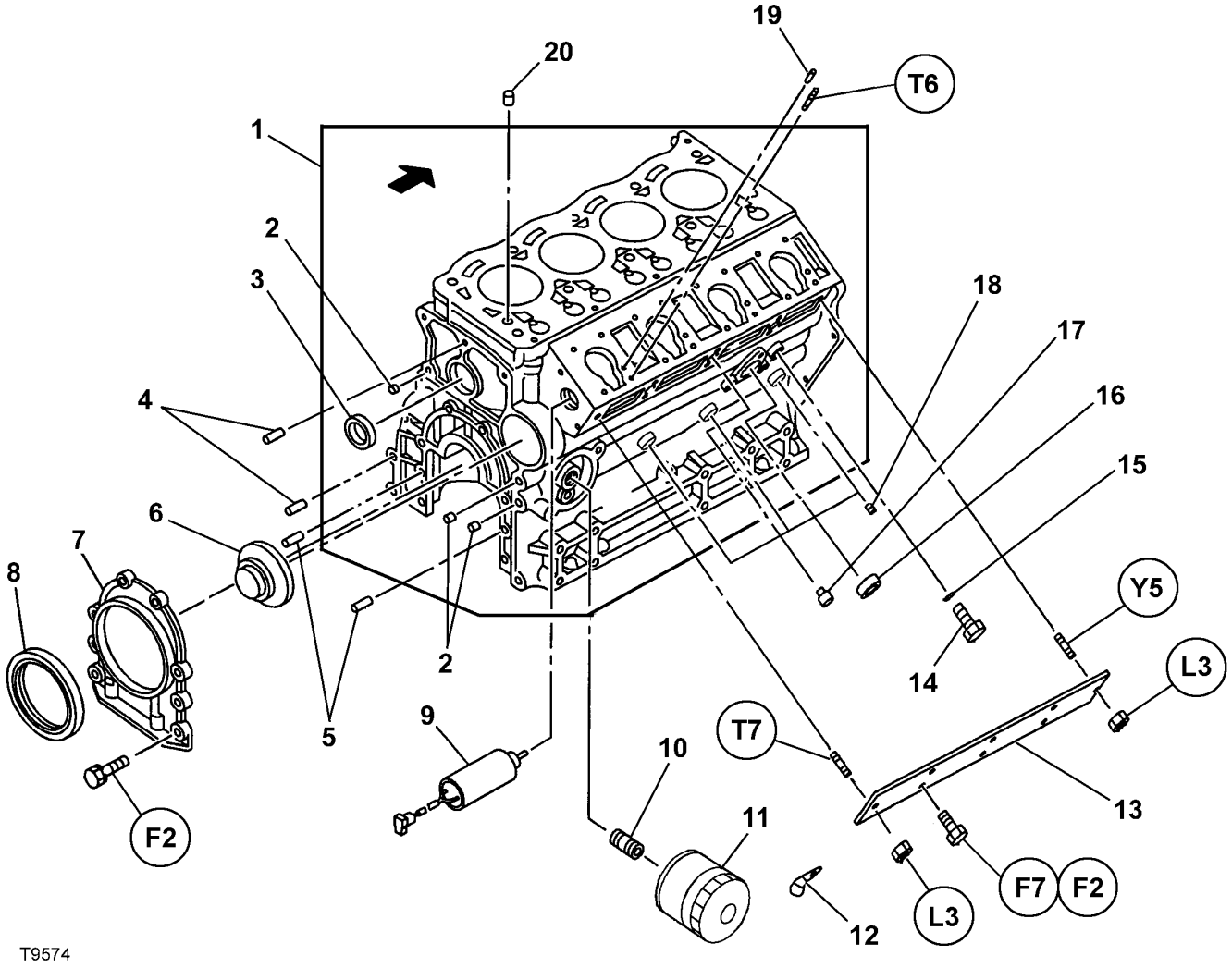

Item	ccn	Qty.	Description	Item	ccn	Qty.	Description
1	49841372	1	Cylinder block assembly	11	54429675	1	Element, oil filter
2	49849219	3	Cup, sealing	12	49849136	1	Clip, retaining
3	49807605	1	Cup, sealing	13	49841042	1	Cover
4	49849037	2	Pin	14	49807142	1	Plug
5	49849029	2	Pin	15	88082607	1	Gasket Part of kit 49840762
6	49808603	1	Plug	16	88080569	1	Cap
7	49808538	1	Cover	17	49808348	2	Pin
8	49807159	1	Seal Part of kit 49840762	18	88080379	3	Plug
9	54430707	1	Solenoid, stop	19	49849185	4	Pin
10	49807712	1	Nipple	20	49807589	2	Dowel

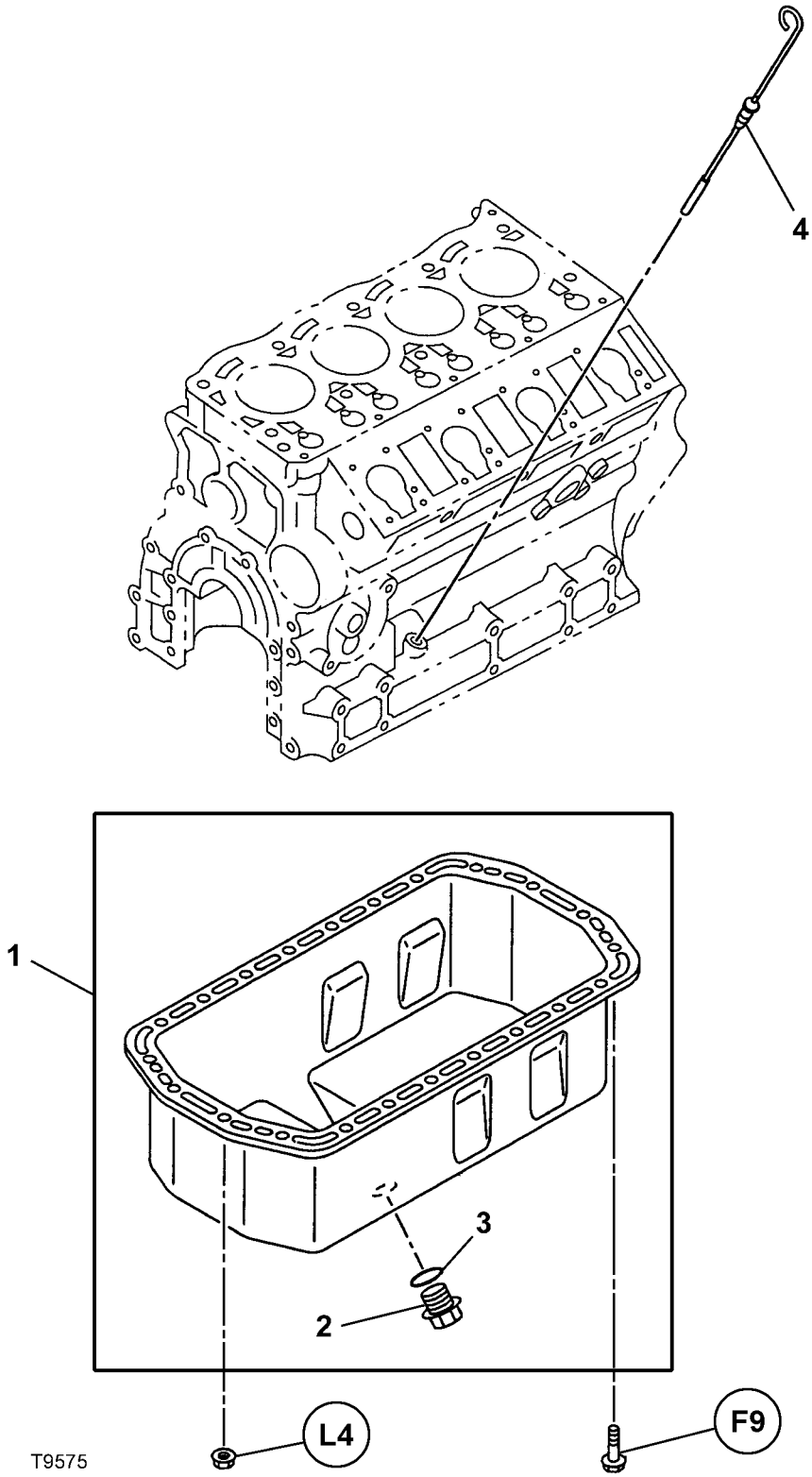

Item	ccn	Qty.	Description	Item	ccn	Qty.	Description
1	49808488	1	Oil pan assembly	3	88080395	1	Gasket Part of kit 49840762
2	88082656	1	Plug	4	49808504	1	Gauge, oil level

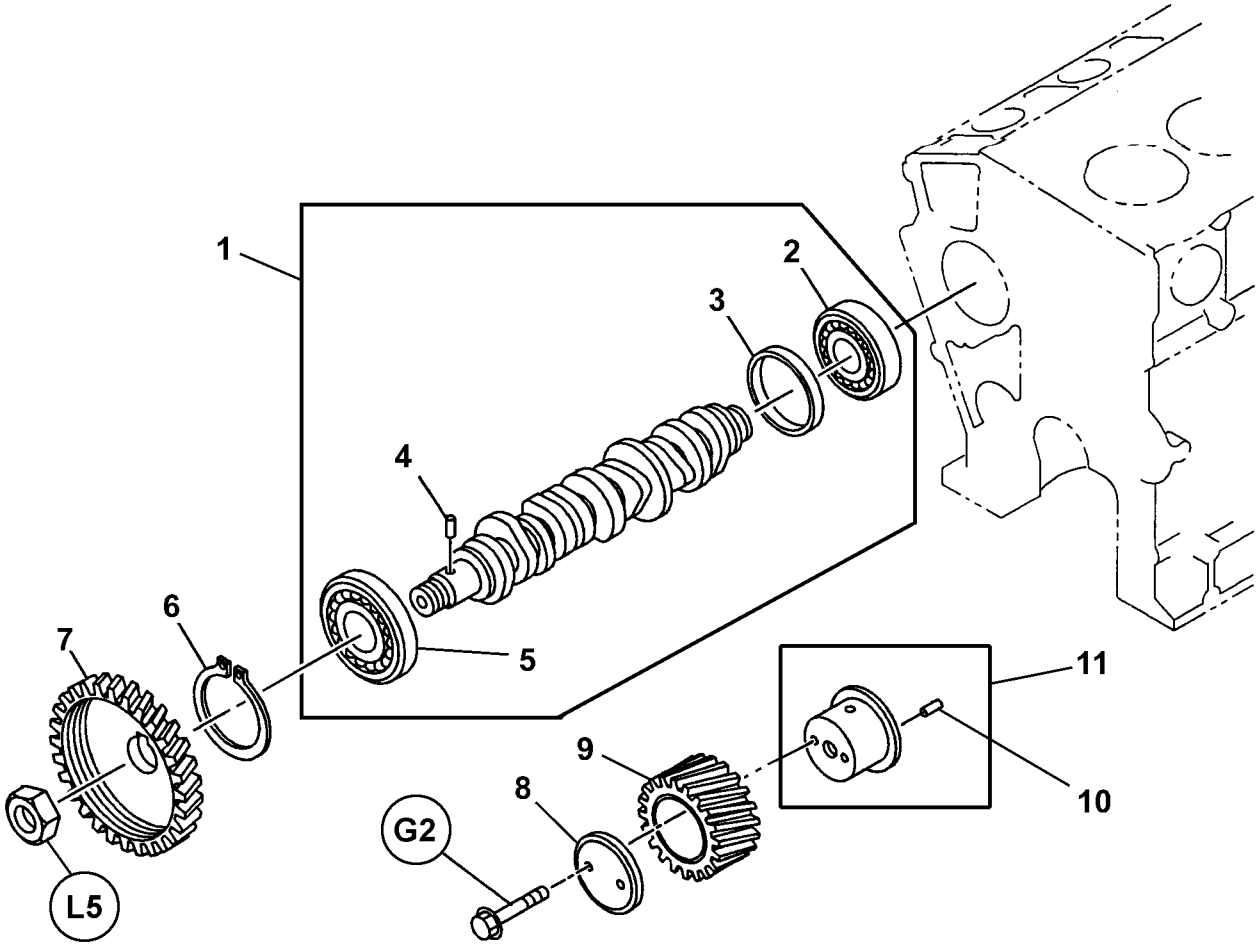

T9576

Item	ccn	Qty.	Description	Item	ccn	Qty.	Description
1	49841299	1	Camshaft	7	49841216	1	Gear
2	49809916	1	Bearing	8	49807241	1	Collar
3	49808645	1	Ring	9	49841349	1	Gear
4	49849193	1	Pin	10	49841497	1	Pin
5	49809908	1	Bearing	11	49809593	1	Shaft
6	49849110	1	Ring snap				

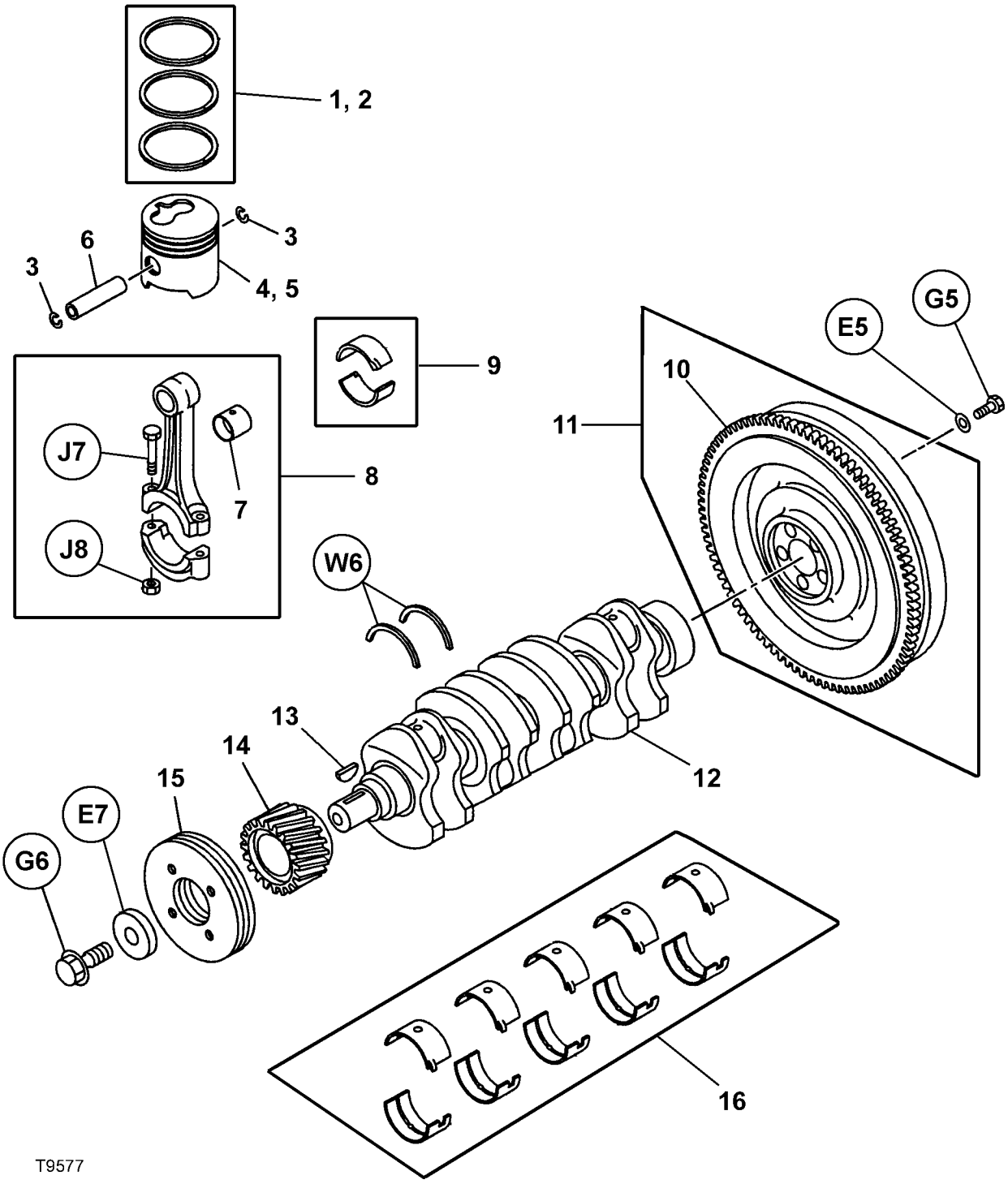

Item	ccn	Qty.	Description
1	49841083	4	Ring set
2	49841091	AR	Ring set OS = .25 mm
3	49840788	8	Ring snap
4	49841406	4	Piston
5	49841398	AR	Piston OS = .25 mm
6	49840747	4	Pin OD = 25
7	49841224	4	Bush
8	49840929	4	Rod, assembly, connecting
9	49840804	4	Bearing
10	49807811	1	Gear
11	49849557	1	Flywheel
12	49840994	1	Crankshaft
13	49807597	1	Key
14	49808041	1	Gear
15	49809866	1	Pulley
16	49841109	1	Kit, bearing

4IRL5N – FLYWHEEL HOUSING

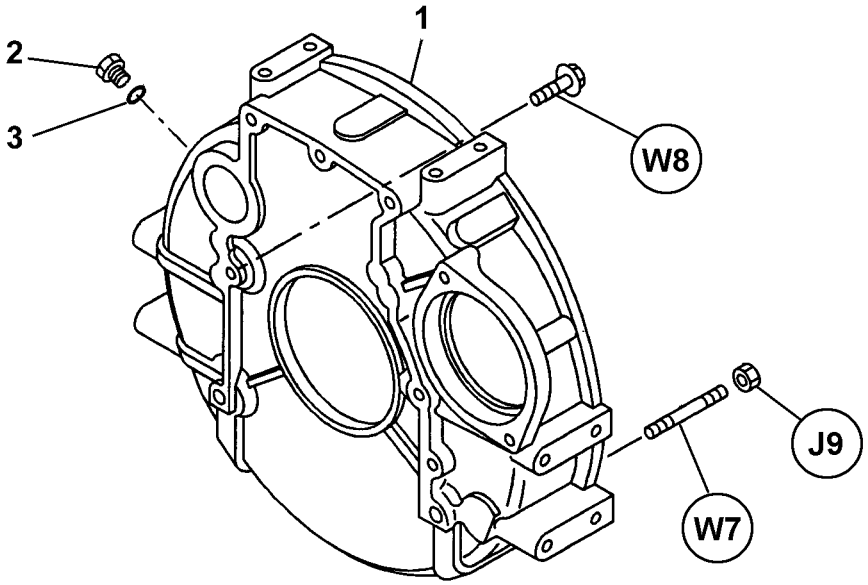

T9578

Item	ccn	Qty.	Description	Item	ccn	Qty.	Description
1	49841463	1	Housing				
2	88080387	1	Plug				
3	88082581	1	Gasket Part of kit 49840762				

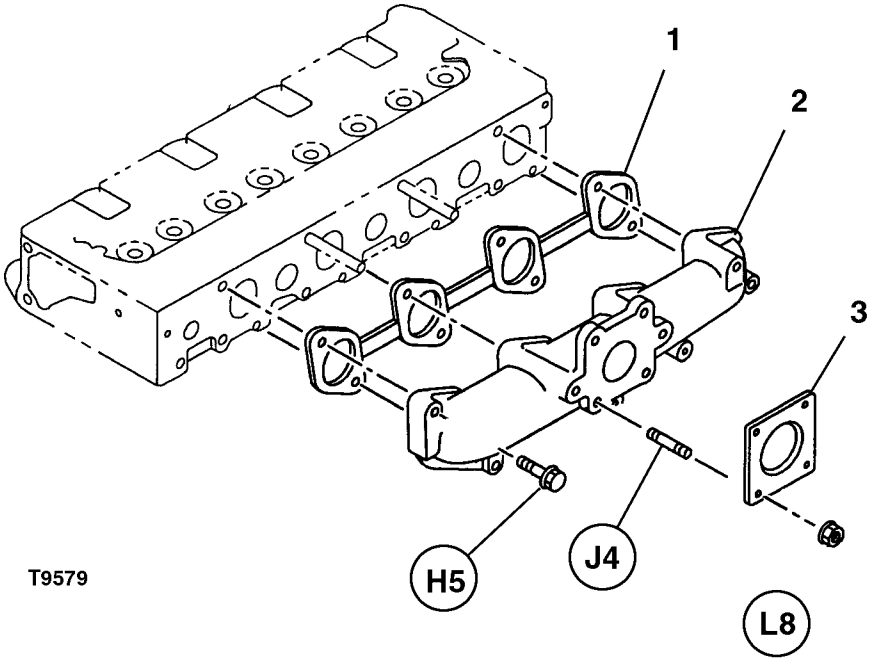

Item	ccn	Qty.	Description	Item	ccn	Qty.	Description
1	49841463	1	Manifold, exhaust				
2	49841067	1	Gasket, exhaust manifold Part of kit 49840762				
3	49808447	1	Gasket				

4IRL5N – WATER PUMP

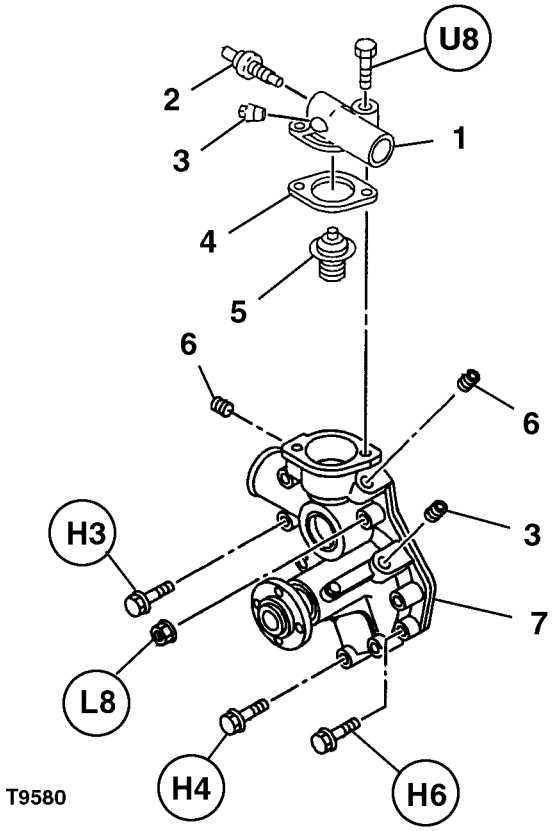

Item	ccn	Qty.	Description	Item	ccn	Qty.	Description
1	49841075	1	Pipe	5	54385836	1	Thermostat
2	36880706	1	Switch, temperature	6	49840861	2	Plug
3	88080494	2	Plug NPT 3/8	7	49841448	1	Pump assembly
4	54385851	1	Gasket Part of kit 49840762				

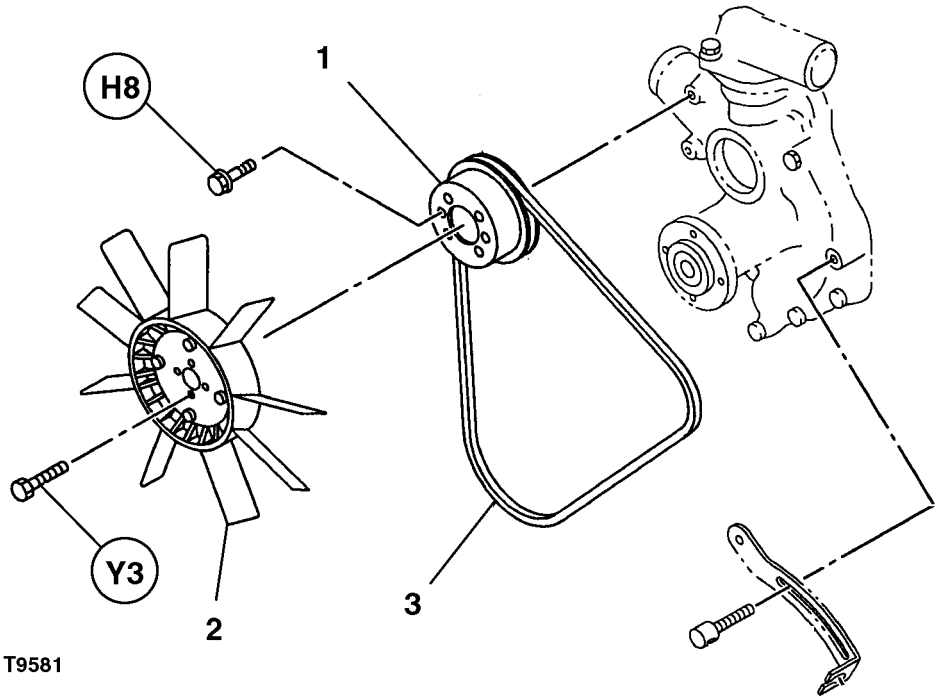

Item	ccn	Qty.	Description	Item	ccn	Qty.	Description
1	49809858	1	Pulley				
2	49841471	1	Fan				
3	54526801	1	Belt, fan				

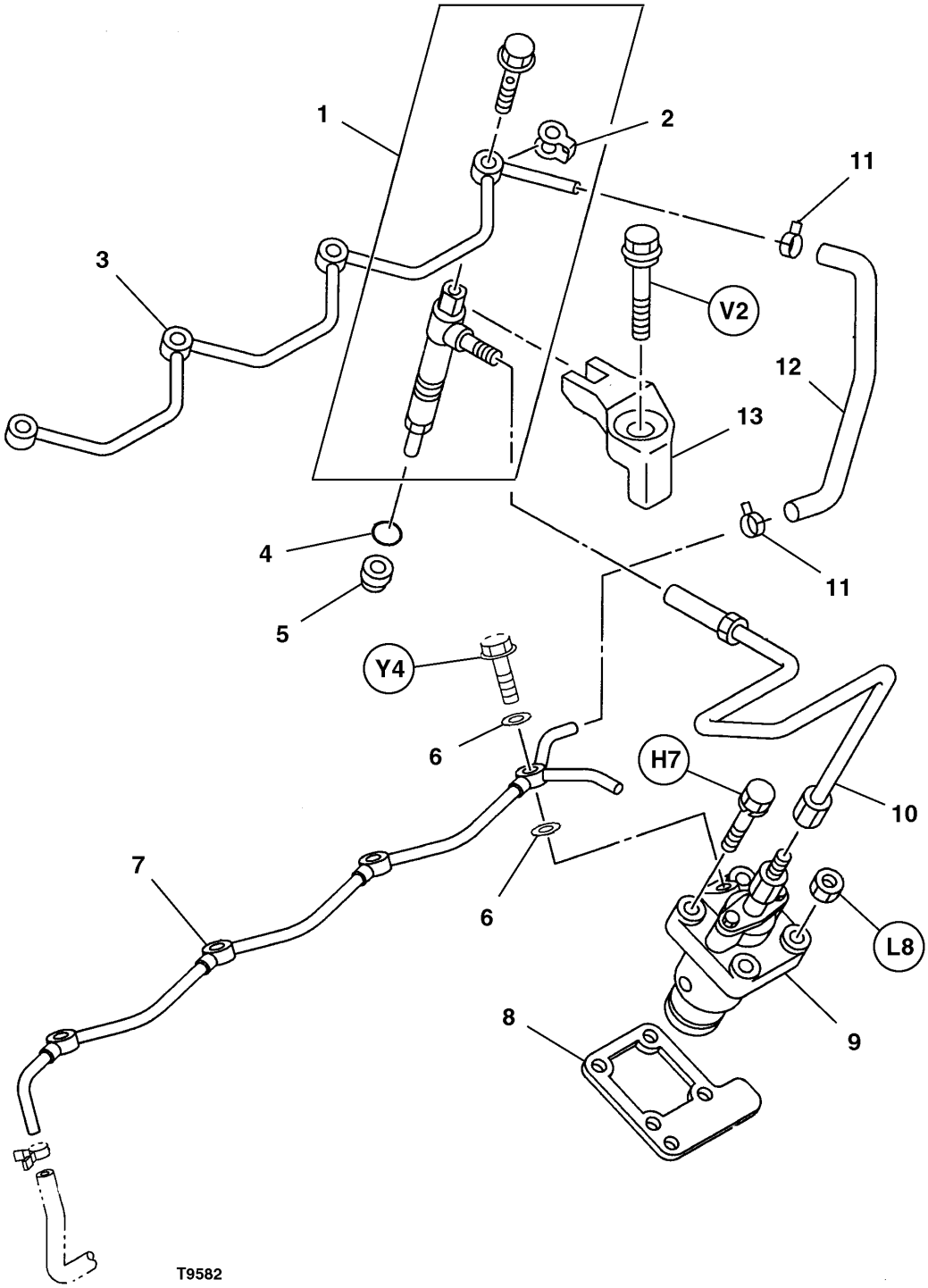

Item	ccn	Qty.	Description		Item	ccn	Qty.	Description	
1	49841323	4	Nozzle, injector		8	49809510	AR	Shim	T=0.4
2	49841380	4	Gasket Part of kit 49840762		8	49809528	AR	Shim	T=0.5
3	49841190	1	Pipe		8	49809536	AR	Shim	T=0.6
4	54385935	4	Gasket Part of kit 49840762		8	49809544	AR	Shim	T=0.7
5	54385950	4	Gasket Part of kit 49840762		8	49809551	AR	Shim	T=0.8
6	54537063	8	Gasket Part of kit 49840762		8	49809569	AR	Shim	T=1.0
7	49841141	1	Pipe		8	49809577	AR	Shim	T=1.2
8	49809494	AR	Shim	T=0.2	9	49841331	4	Pump assembly	
8	49809502	AR	Shim	T=0.3	10	49841307	4	Pipe	
					11	49807183	2	Clip, hose	
					12	49841315	1	Hose	
					13	49841166	4	Bracket	

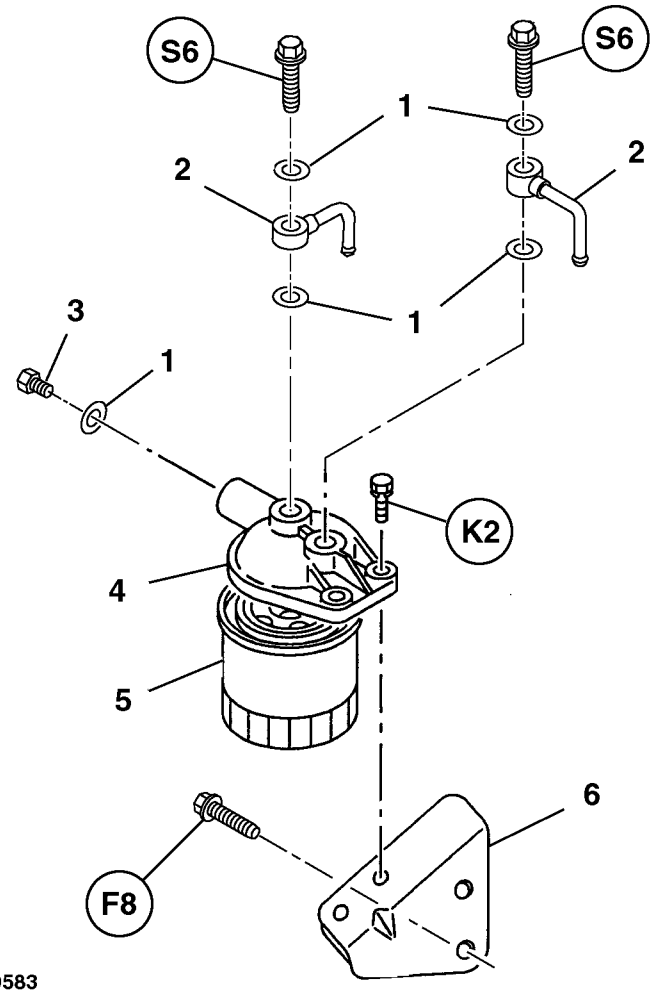

Item	ccn	Qty.	Description	Item	ccn	Qty.	Description
1	88082607	5	Gasket	4	88080643	1	Cover
2	49807167	2	Coupling assembly	5	54381306	1	Element, fuel filter
3	49849284	1	Plug M14–2.0 X 9	6	49809379	1	Bracket

4IRL5N – FUEL PUMP

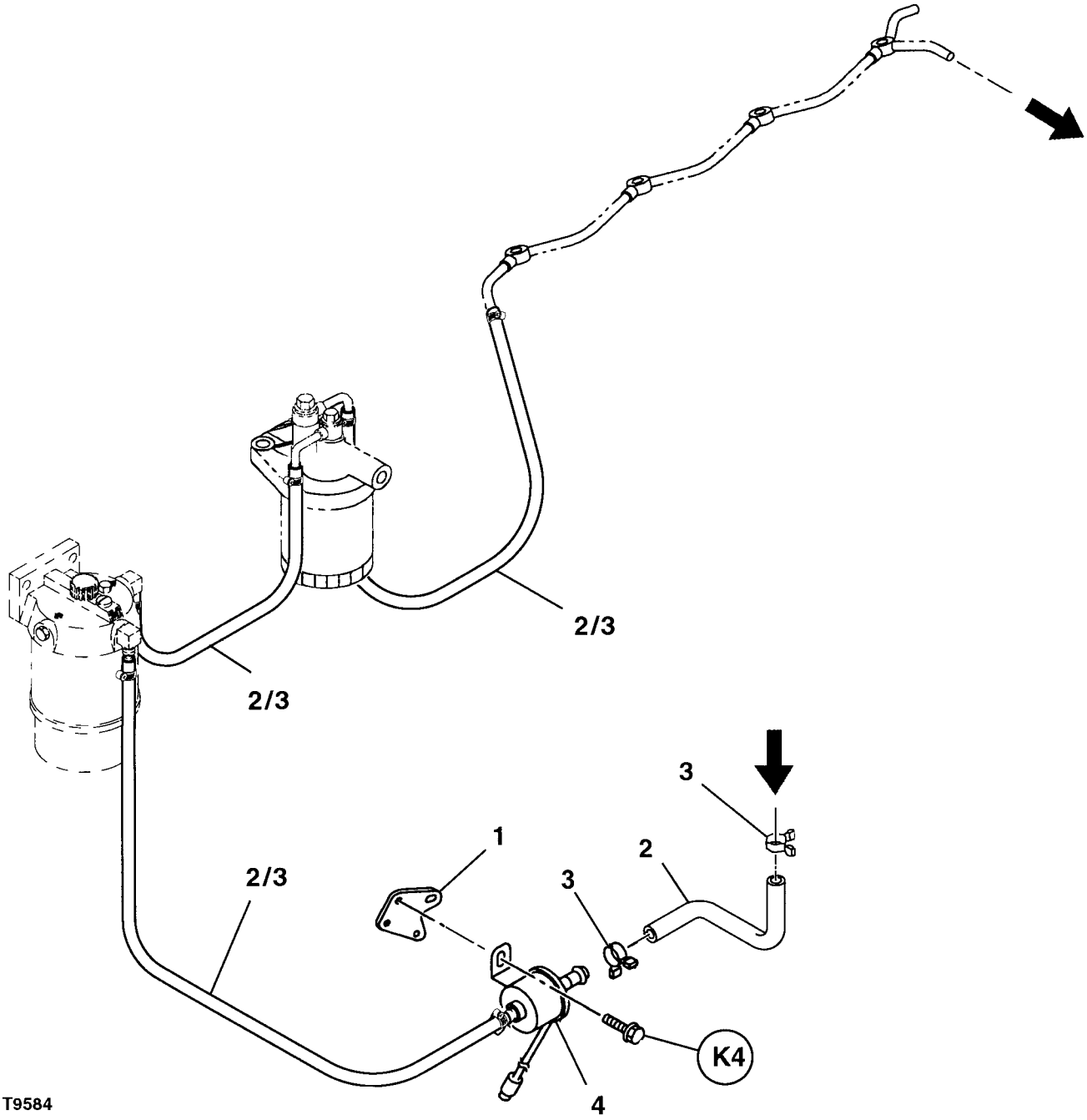

Item	ccn	Qty.	Description	Item	ccn	Qty.	Description
1	49809387	1	Bracket	3	35296342	8	Clip, retaining
2	35363498	AR	Hose 5/16” Fuel	4	49809809	1	Fuel pump assembly

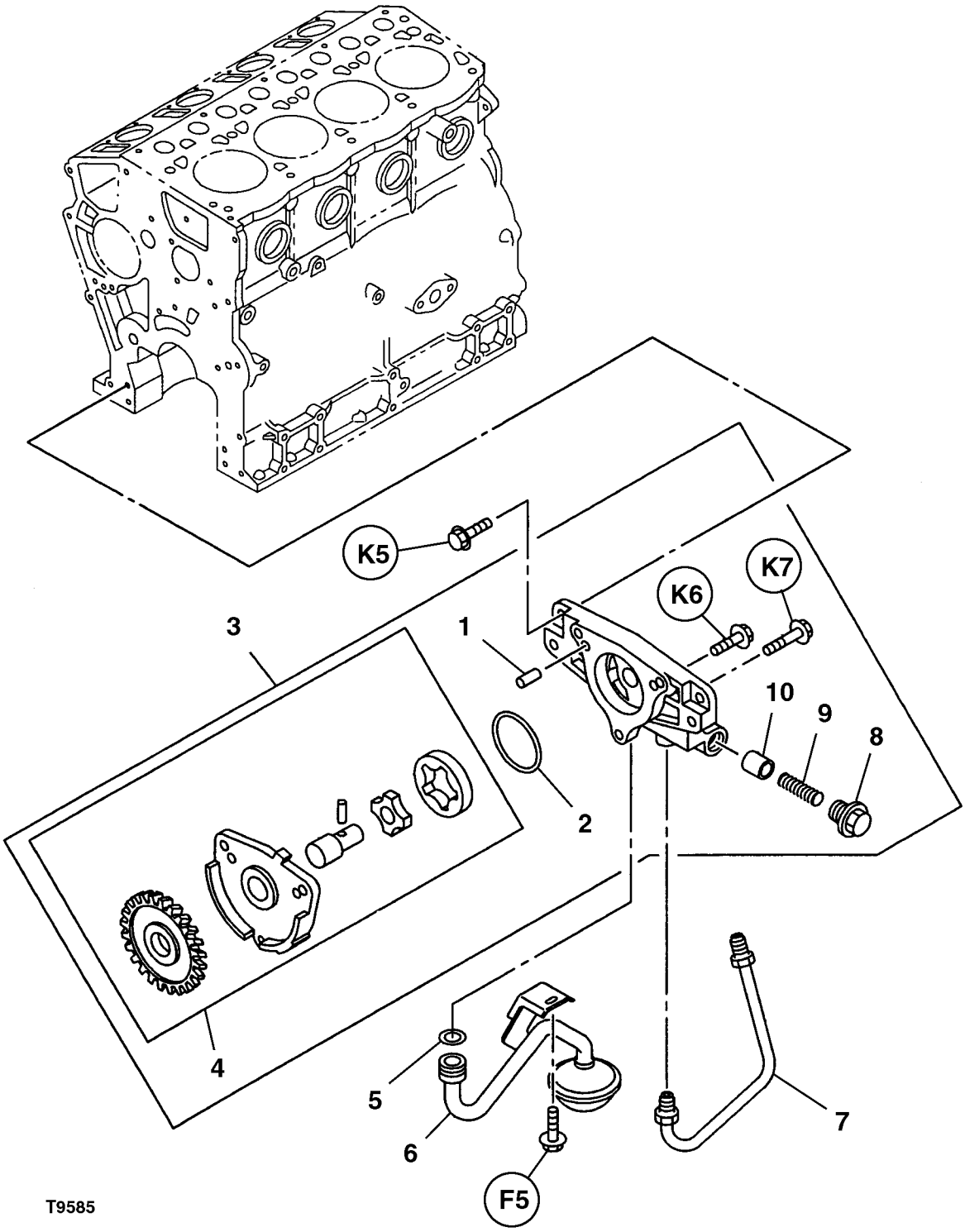

Item	ccn	Qty.	Description
1	49849029	2	Pin
2	49809338	1	Gasket Part of kit 49840762
3	49808611	1	Oil pump assembly
4	49808546	1	Oil pump sub assembly
5	49807027	1	Gasket Part of kit 49840762
6	49841018	1	Filter,oil
7	49840903	1	Pipe
8	49807290	1	Plug
9	49809429	1	Spring
10	49807613	1	Valve, relief

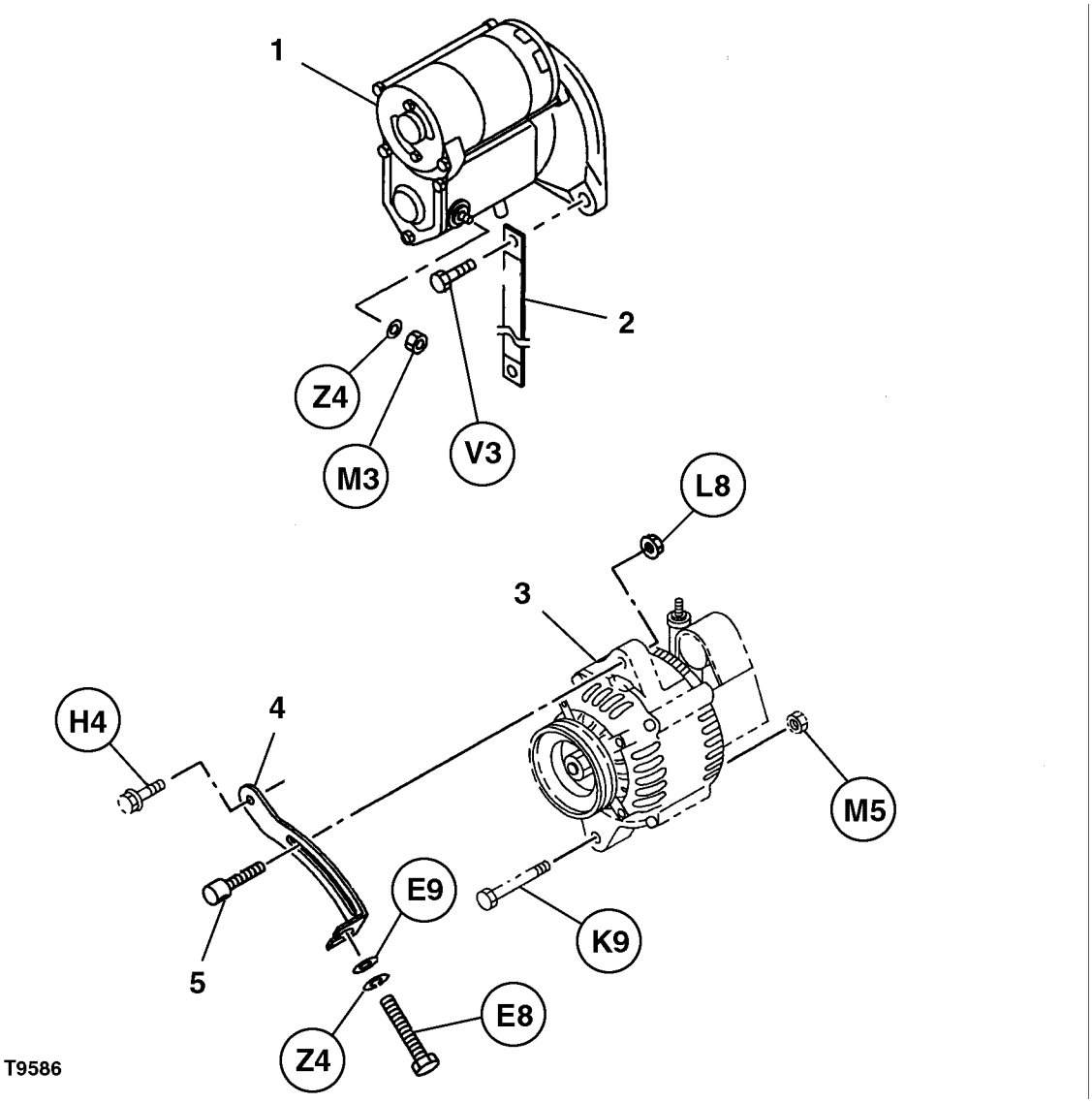

Item	ccn	Qty.	Description	Item	ccn	Qty.	Description
1	49840986	1	Starter assembly	4	49809882	1	Plate
2	49841513	1	Cable, earth	5	88081757	1	Piece, sliding
3	49809841	1	Alternator				

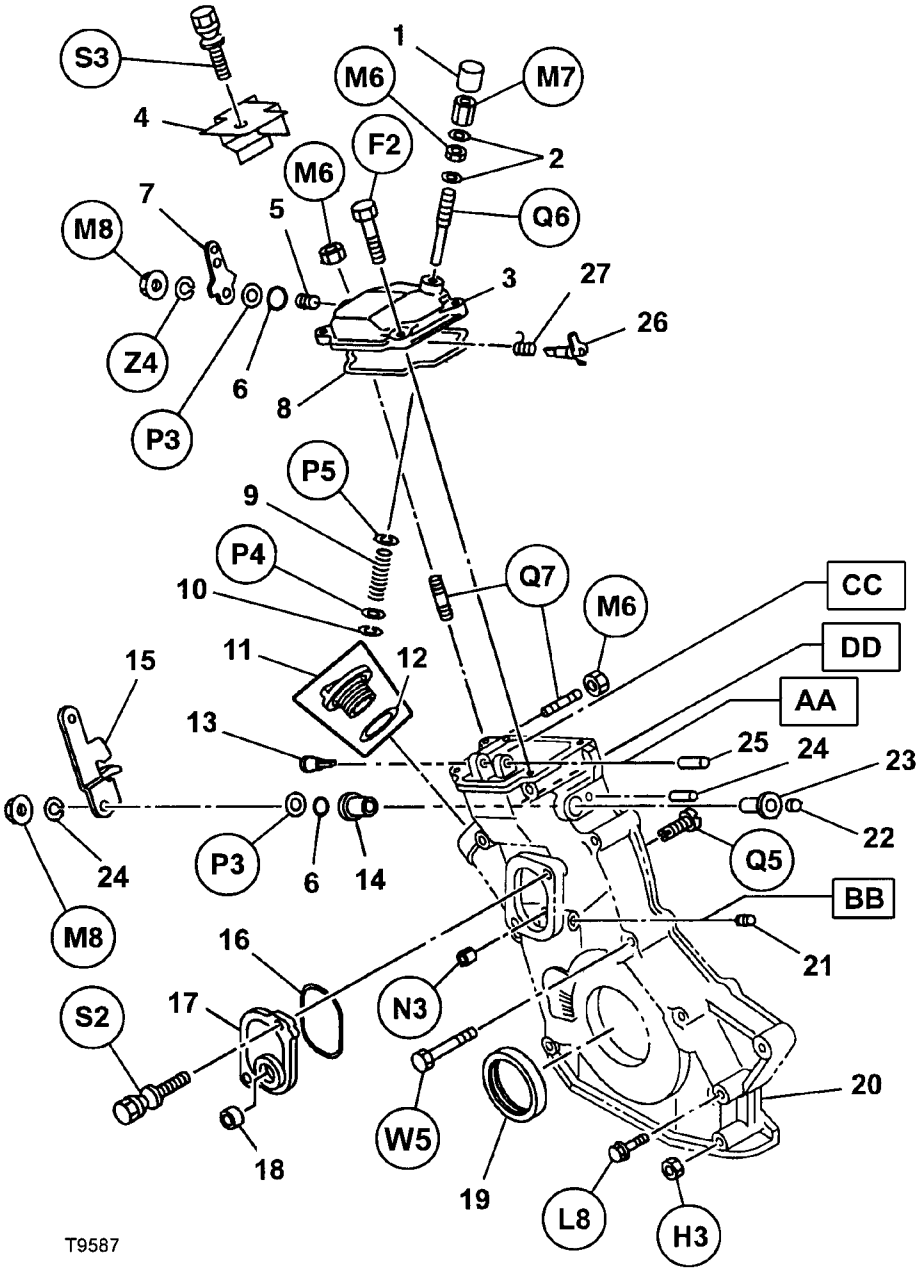

Item	ccn	Qty.	Description	Item	ccn	Qty.	Description
1	49807266	1	Cap	15	49808637	1	Lever
2	49807126	2	Gasket Part of kit 49840762	16	49841265	1	Gasket Part of kit 49840762
3	49841125	1	Cover	17	49841257	1	Cover
4	49809486	1	Cover	18	88080544	1	Cup, sealing OD = 16
5	49807001	1	Plug NPT 1/4	19	88080510	1	Seal Part of kit 49840762
6	49807019	2	Gasket Part of kit 49840762	20	49841273	1	Cover
7	49807928	1	Lever	21	88080379	1	Plug NPT 1/8
8	49808702	1	Gasket Part of kit 49840762	22	49807845	1	Cup, sealing
9	49807936	1	Spring	23	49808322	1	Bush
10	49849128	1	Ring snap	24	49809999	1	Pin
11	49807829	1	Cap	25	49849045	1	Shaft
12	88080767	1	Gasket	26	49807910	1	Shaft
13	49807274	1	Eye	27	49808363	1	Spring
14	49807753	1	Bush				

4IRL5N – TIMING GEAR CASE

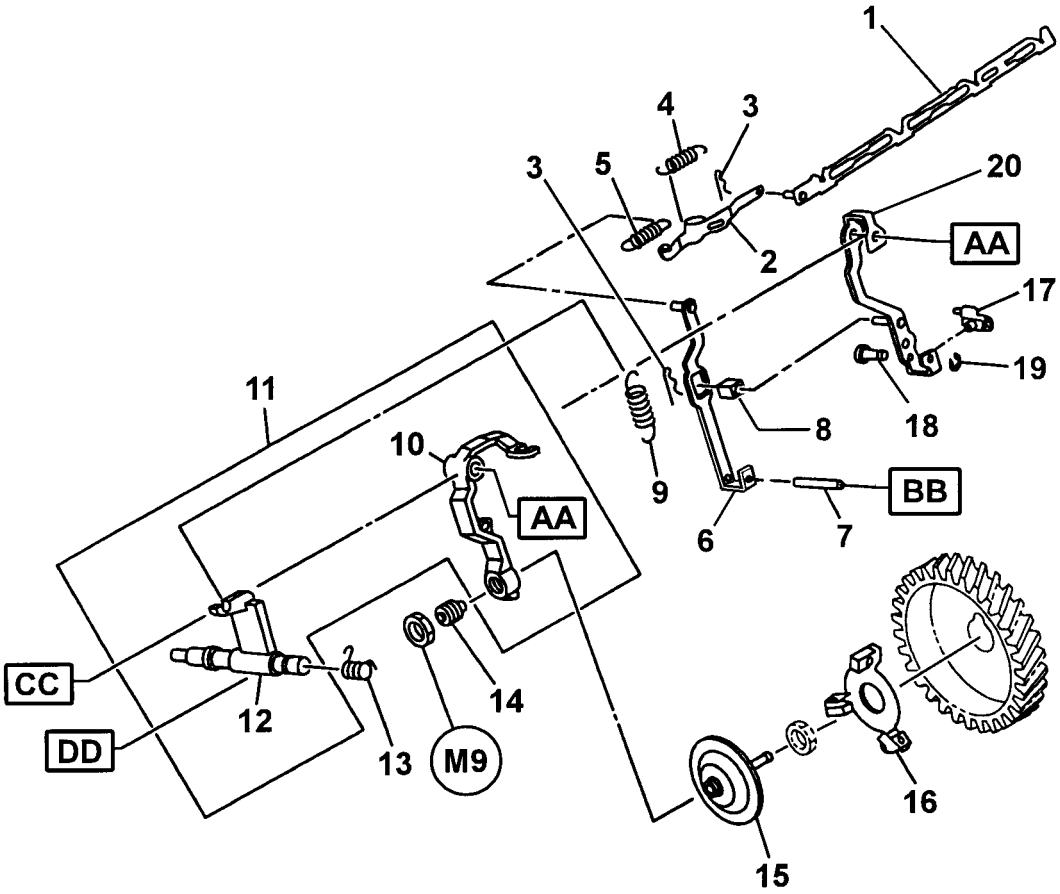

T9588

Item	ccn	Qty.	Description	Item	ccn	Qty.	Description
1	49841117	1	Link	12	49808256	1	Lever
2	49809700	1	Plate	13	49807944	1	Spring
3	49807043	2	Pin	14	49841000	1	Kit
4	49808983	1	Spring	15	49809684	1	Sleeve
5	49808975	1	Spring set	16	49808579	1	Flyweight
6	49809692	1	Lever	17	49808231	1	Shifter
7	49849011	1	Shaft	18	49849052	1	Shaft
8	49809411	1	Guide	19	88082524	1	Ring
9	49841133	1	Spring	20	49808058	1	Lever
10	49808223	1	Lever				
11	49809114	1	Kit, lever				

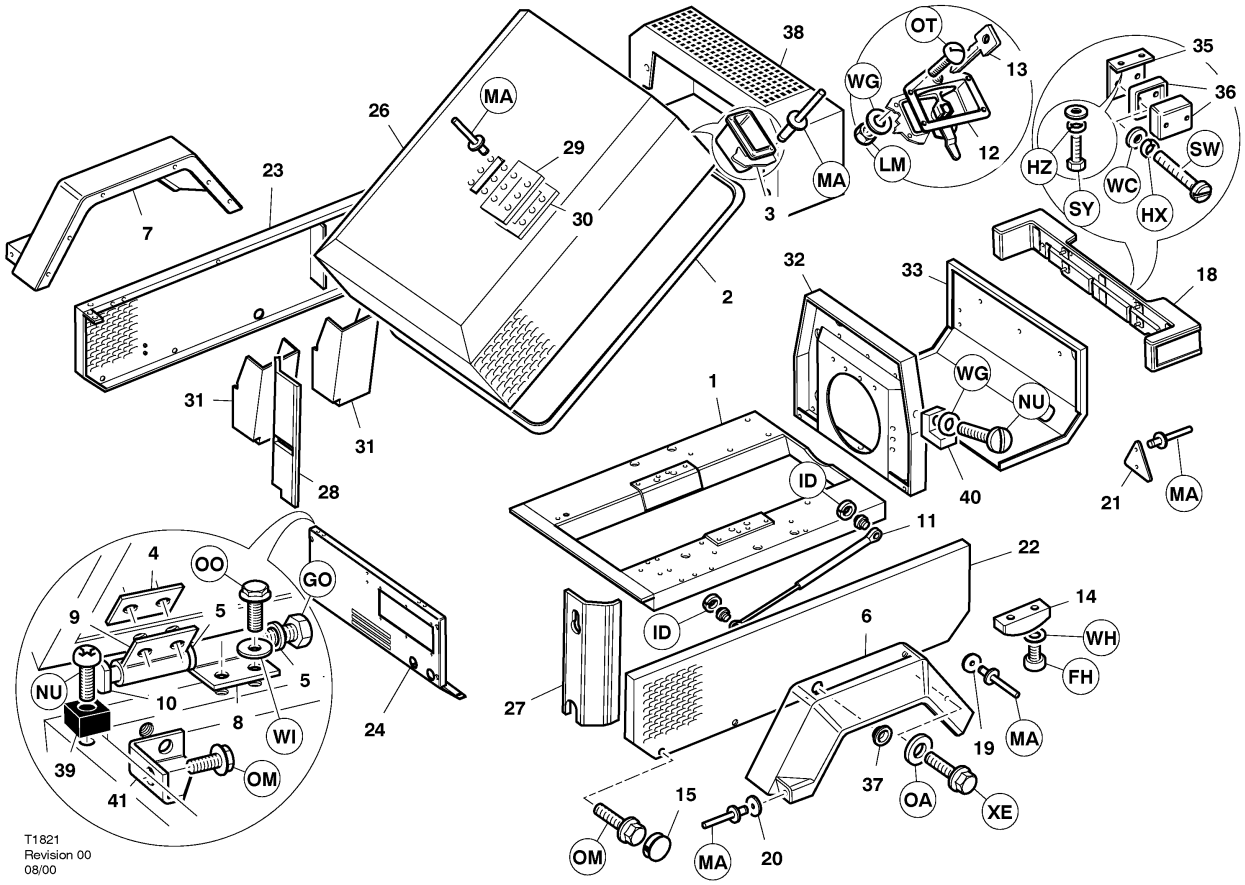

Item	ccn	Qty.	Description
1	54540414	1	Frame
2	92119957	1	Seal
3	92824010	2	Handle
4	92795095	2	Plate
5	92119460	4	Washer
6	93465409	1	Mudguard LH
7	93465417	1	Mudguard RH
8	92798727	2	Hinge Lower
9	92798719	2	Hinge Upper
10	92119445	2	Pin, hinge
11	92107804	2	Spring, gas
12–13	92794254	1	Latch
13	92094358	2	Key
14	89257067	2	Protector
15	92783281	18	Plug
16	–		
17	–		
18	92894609	1	Bar, bumper
19	92121243	4	Reflector (amber)
20	92085729	4	Reflector (white)
21	92721331	2	Reflector (red)
22	54540349	1	Panel, left hand
23	54540331	1	Panel, right hand
24	54540356	1	Panel
25	–		
26	54540380	1	Enclosure hinged
27	54572557	1	Baffle Left hand
28	54572565	1	Baffle Right hand
29	54635539	1	Gasket
30	54635547	1	Cover
31	54612247	2	Toolbox
32	54540406	1	Plate, orifice 7/31
	54563317	1	Plate, orifice 7/41
33	54542899	1	Panel
34	–		
35	93477370	2	Bracket
36	93477388	2	Fog light assembly
37	92788868	2	Plug
38	54540398	1	Enclosure, fixed
39	92799501	2	Protector Front
40	92799519	2	Protector Rear
41	92783810	2	Bracket

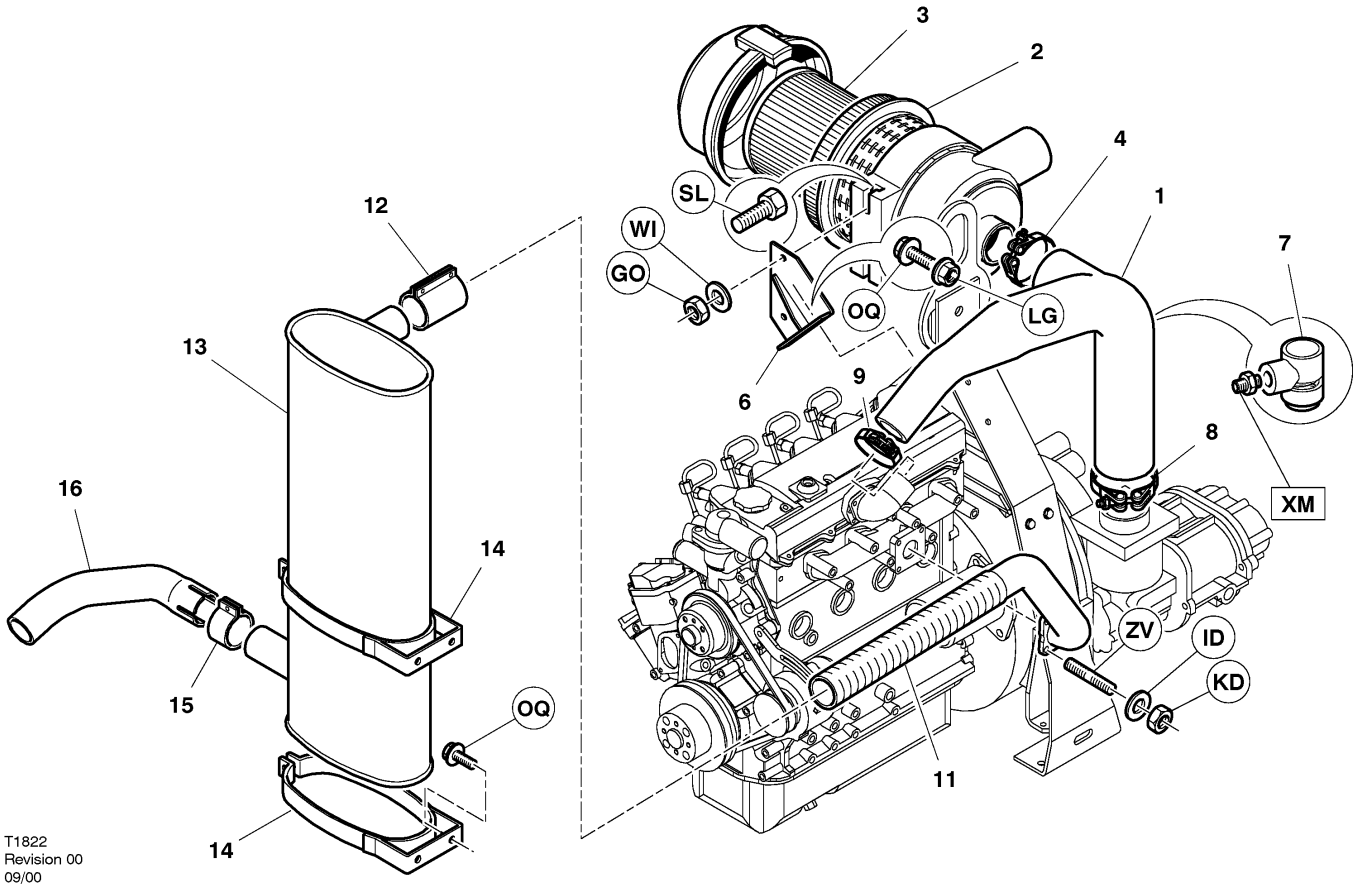

Item	ccn	Qty.	Description	Item	ccn	Qty.	Description
1	54570734	1	Hose 7/31	9	92311224	1	Clamp
				10	–		
	54540612	1	Hose 7/41	11	54573845	1	Pipe 7/31
2	89204721	1	Filter assembly		54540521	1	Pipe 7/41
3	89232474	1	Element, air filter				
4	89303853	1	Clamp	12	92321926	1	Clamp
5	–			13	54540570	1	Silencer
6	54540620	1	Bracket	14	54540596	2	Bracket
7	35300615	1	Indicator, air restriction	15	54576632	1	Clamp
8	92117696	1	Clamp	16	54540588	1	Pipe

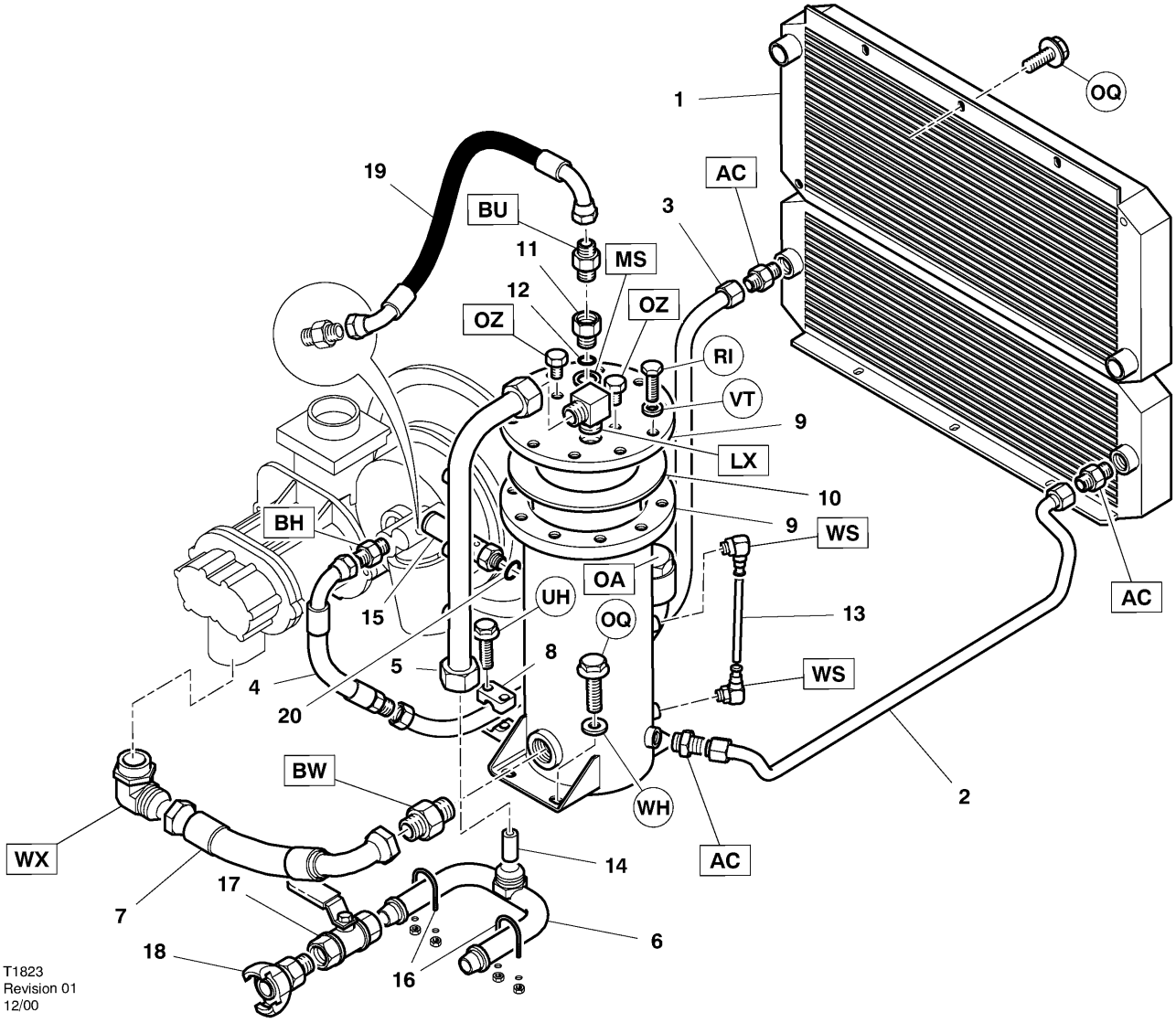

Item	ccn	Qty.	Description
1	54540646	1	Cooler
2	54542931	1	Tube assembly
3	54599352	1	Tube assembly 7/31
	54599345	1	Tube assembly 7/41
4	54542998	1	Hose assembly
5	54540737	1	Tube assembly
6	54540729	1	Manifold
7	54575147	1	Hose assembly 7/31
	54540711	1	Hose assembly 7/41
8	54577168	1	Clamp
9	54569405	1	Tank, separator
10	54596705	1	Element, separator
11	54517735	1	Connector Drop–tube
12	92877620	1	‘O’ Ring
13	92823921	1	Sight–glass
14	36921690	1	Orifice, sonic 7/31
	89232854	1	Orifice, sonic 7/41
15	93159655	1	Valve, safety
16	54540745	2	Clamp
17	92294461	2	Valve, ball
18	92178524	2	Coupling
19	92789288	1	Hose assembly
20	93472272	1	Seal

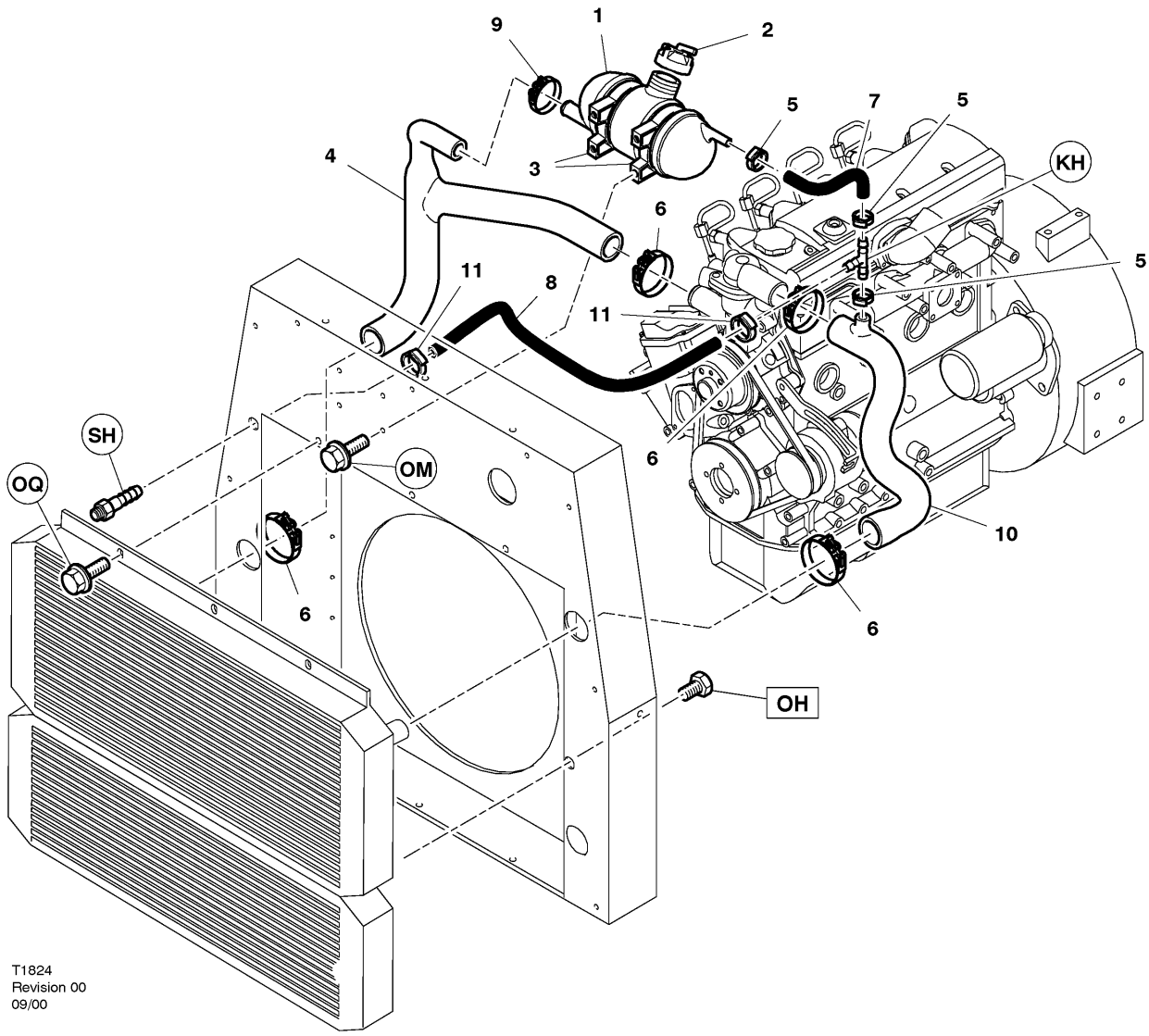

Item	ccn	Qty.	Description
1–2	54566328	1	Tank assembly
1	54540653	1	Tank, header
2	54540661	1	Cap
3	54564273	2	Clamp
4	54540554	1	Hose
5	54577275	3	Clip, retaining
6	92253111	4	Clip, retaining
7	54577184	0.4m	Hose 10mm
8	54577176	1.3m	Hose 6mm
9	92762723	1	Clip, retaining
10	54540547	1	Hose
11	54577267	2	Clip, retaining

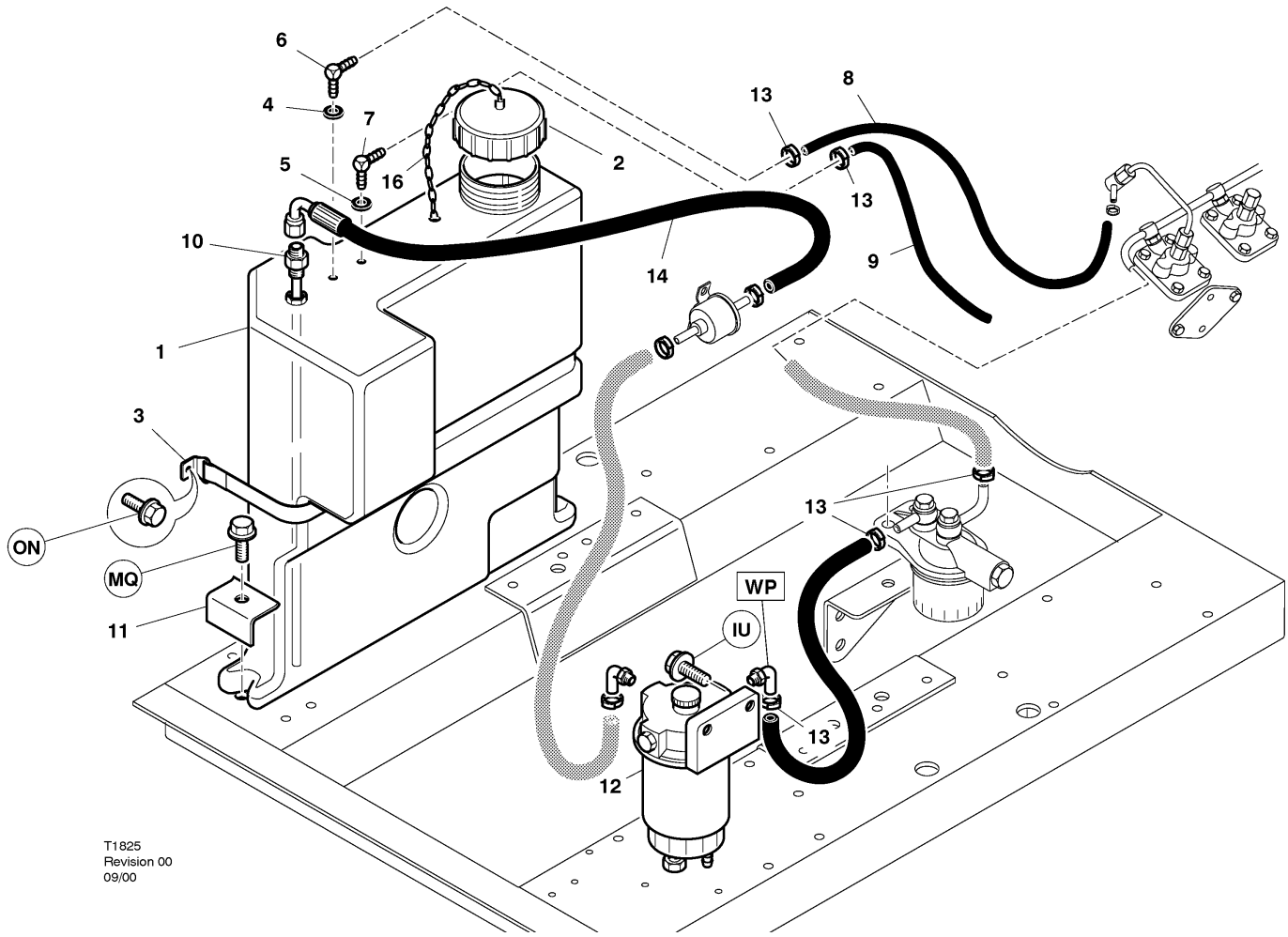

Item	ccn	Qty.	Description
1–2	54540489	1	Fuel tank assembly
1	54542949	1	Tank, fuel
2	54533047	1	Cap
3	54542949	1	Strap
4	54580139	1	Grommet
5	89257489	1	Grommet
6	54580154	1	Elbow 8mm
7	89257497	1	Elbow 4mm
8	54576624	1.2m	Tube 8mm
9	89260954	1.2m	Tube 4mm
10	54601901	1	Drop–tube
11	92857556	2	Clamp
12	54525506	1	Separator, water
13	92799485	AR	Clip, retaining
14	92792977	1	Hose assembly
15	92919331	1	Tube
16	92814243	1	Chain

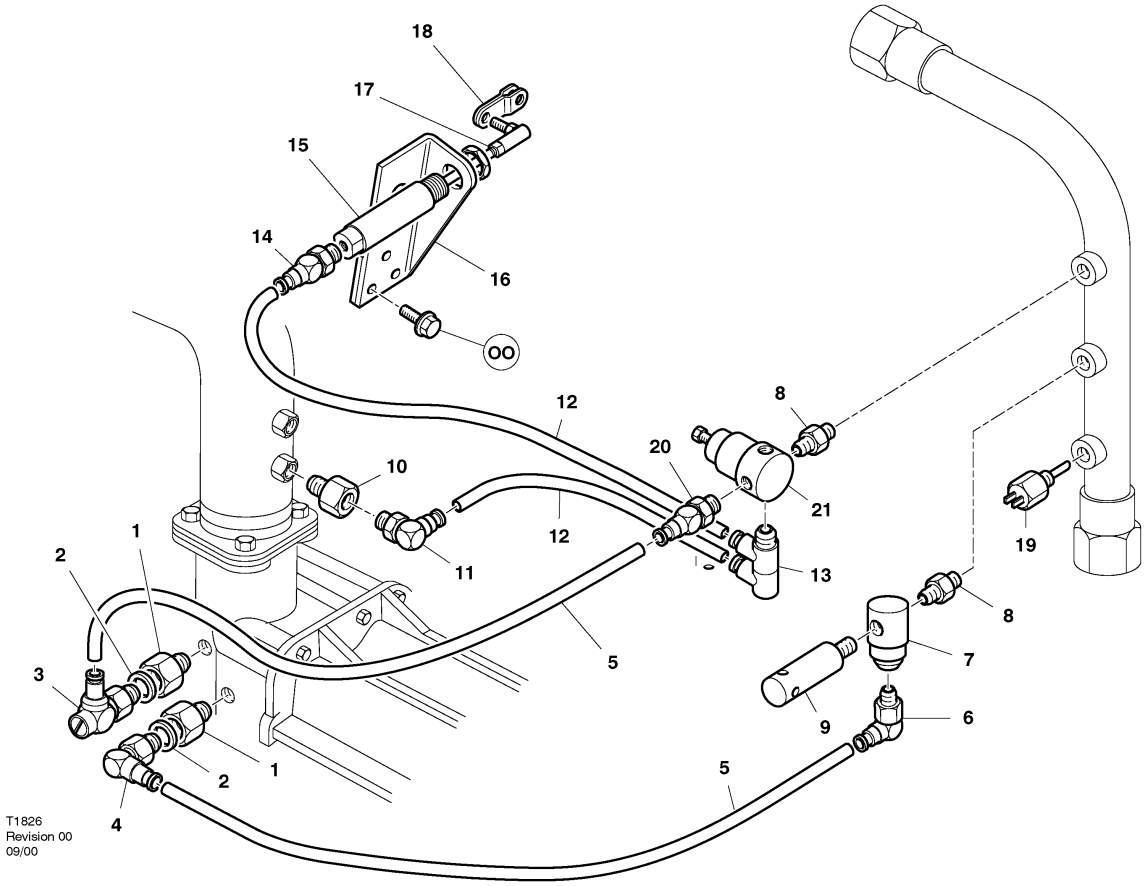

Item	ccn	Qty.	Description
1	92788918	2	Adaptor
2	92293661	2	Washer
3	93174175	1	Valve, check
4	54403266	1	Elbow
5	92799378	AR	Tube (Nylon) 8mm
6	54403266	1	Elbow
7	35322379	1	Valve, blowdown
8	89253991	2	Connector
9	92549369	1	Orifice, silencer
10	92863810	1	Adaptor
11	54403266	1	Elbow
12	92490358	AR	Tube (Nylon) 6mm
13	92794266	1	Elbow
14	92715051	1	Connector
15	54440102	1	Cylinder
16	54438213	1	Bracket
17	54493085	1	Ball–joint
18	54438239	1	Link
19	92762756	1	Sensor, temperature
20	92931401	1	Connector
21	35355106	1	Regulator

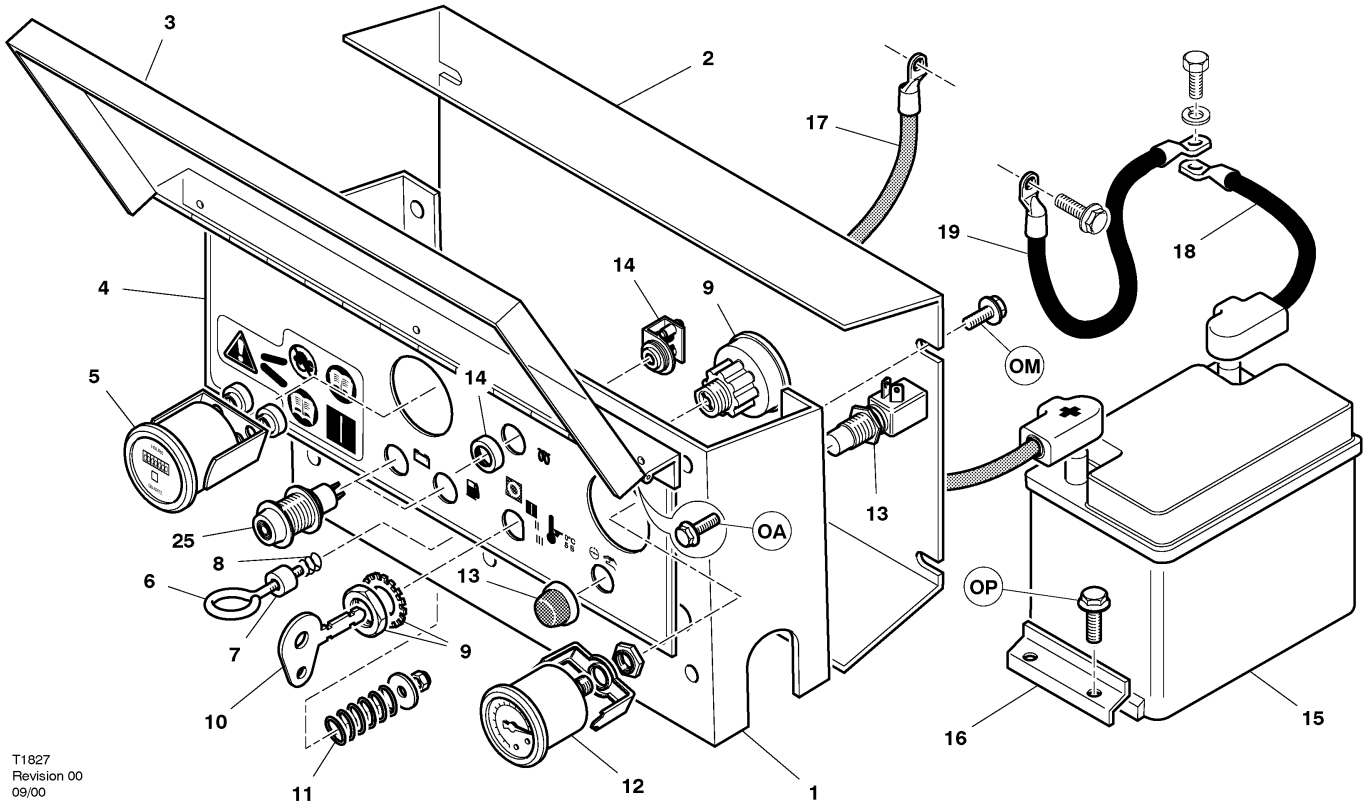

Item	ccn	Qty.	Description
1	54572128	1	Panel, instrument
2	54479654	1	Cover
3	88125752	1	Door assembly
4	54571914	1	Decal, facia
5	92306901	1	Hourmeter
6	93159804	1	Eye
7	93159812	1	Spacer
8	35376342	1	Spring
9	92086719	1	Key–switch
10	92075530	1	Key
11	92799840	1	Spring
12	92790187	1	Gauge, pressure
†13	35255553	1	Button, start/run
14	54537303	1	Resistor 7/31
14	54571906	1	Resistor 7/41
15	92656925	1	Battery
16	92808161	1	Clamp
17	89231757	1	Cable (red)
18	88109988	1	Cable (black)
19	92789734	1	Cable, earth
*20	92076173	4	Relay
*21	92969914	5	Diode
*22	54572151	1	Harness, main
*23	89282867	1	Fuse, holder
*24	89284558	1	Fuse
25	93466381	2	Light
*26	54598701	1	Safety, unit
*27	54601653	1	Harness, safety

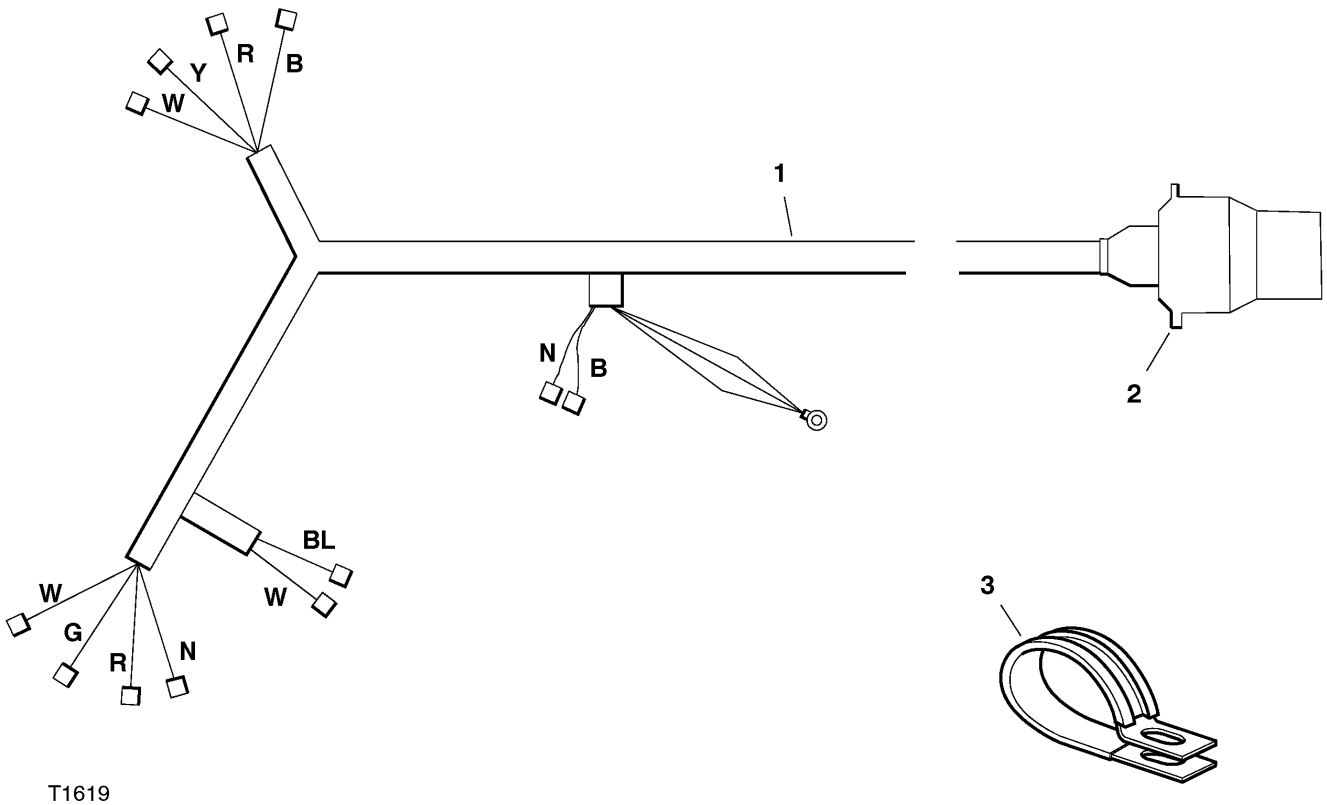

T1619
Revision 00
02/94

Item	ccn	Qty.	Description
1	92789742	1	Harness
2	92280817	1	Plug
3	92253194	10	Clip, retaining
*4	92280817	1	Holder

* Not illustrated

Item	ccn	Qty.	Description
			KEY
		B	Black
		BL	Blue
		G	Green
		GR	Grey
		N	Brown
		O	Orange
		P	Pink
		PU	Purple
		R	Red
		W	White
		Y	Yellow

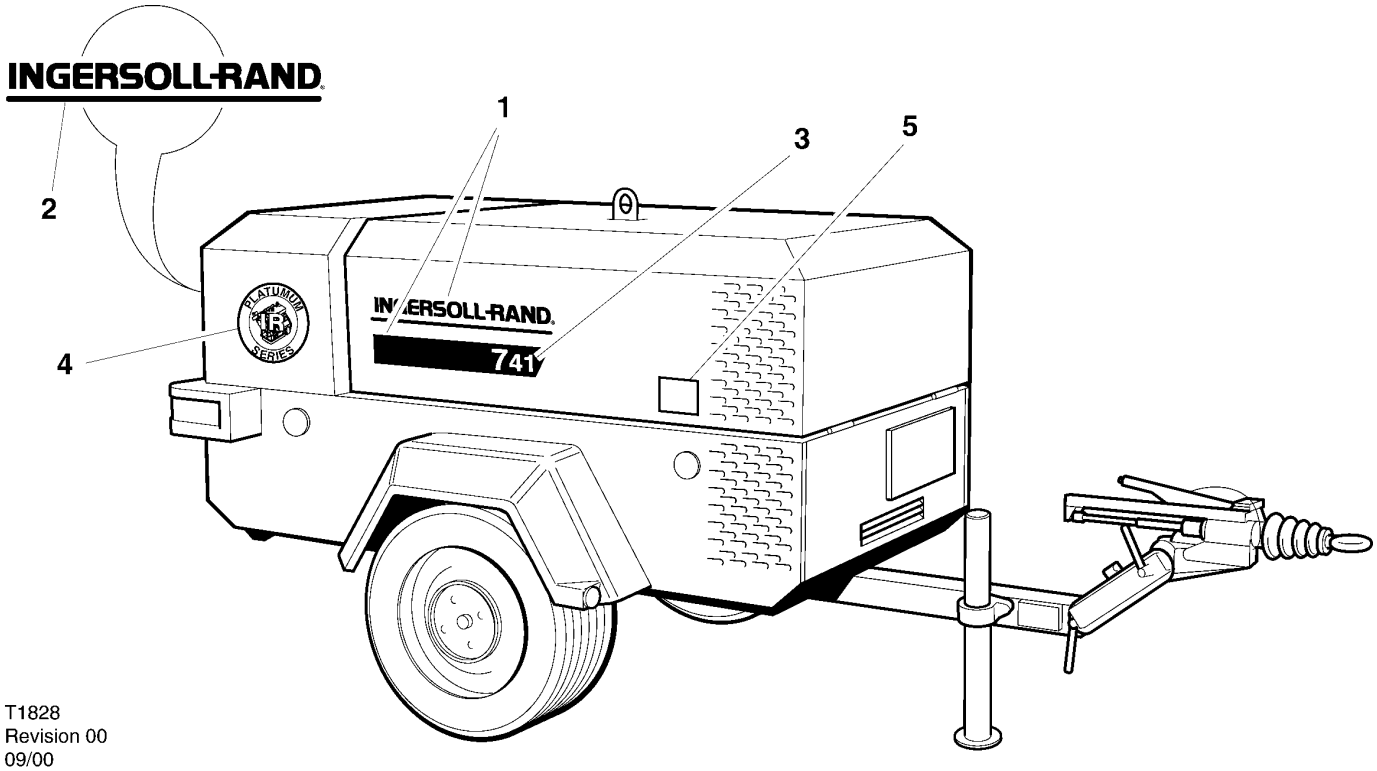

T1828
Revision 00
09/00

Item	ccn	Qty.	Description
1–3	**85449015**	1	**KIT – EXTERNAL DECALS (7/31)**
1	93499952	2	Decal, logotype (black)
2	93499929	1	Decal, logotype (black)
3	54577937	2	Decal, model (white)
1–3	**85449023**	1	**KIT – EXTERNAL DECALS (7/41)**
1	93499952	2	Decal, logotype (black)
2	93499929	1	Decal, logotype (black)
3	54540778	2	Decal, model (white)

Item	ccn	Qty.	Description
4	54482989	1	Decal Engine
5	92814276	1	Decal, sound power
***6**	**93174068**	1	**KIT – INTERNAL DECALS**
*7	54541768	1	Manual, Operation and Maintenance, with parts catalogue
*8	54626486	1	Manual, Operation and Maintenance GB
*9	54681135	1	Manual, Operation and Maintenance (F, NL, D)
*10	54681150	1	Manual, Operation and Maintenance (DK, S, N, SF)
*11	54681143	1	Manual, Operation and Maintenance (P, I, E)
*12	54626494	1	Manual, Parts catalogue

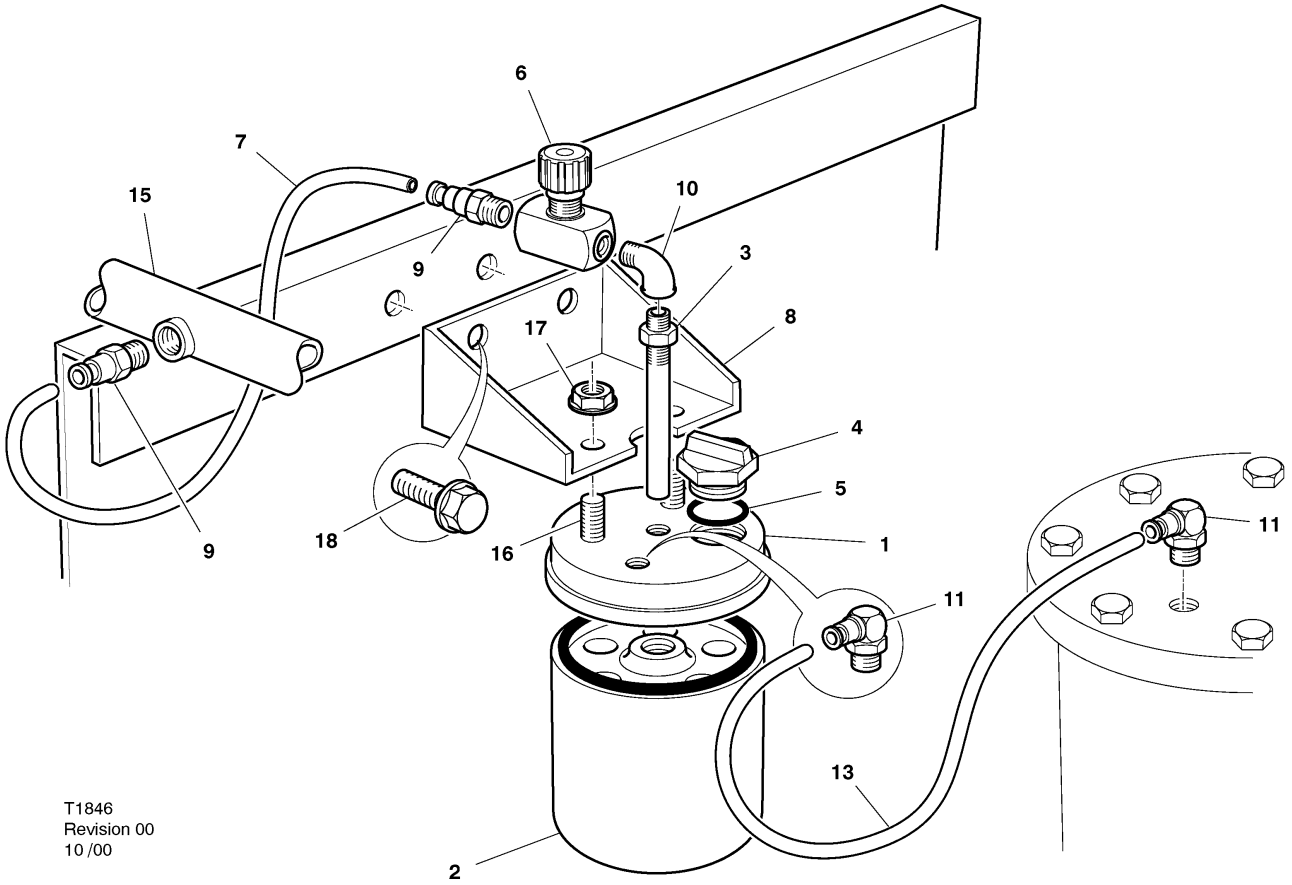

Item	ccn	Qty.	Description
1–18	**92856160**	**1**	**KIT–LUBRICATOR**
1	92919398	1	Head
2	92919380	1	Housing
3	92911288	1	Tube
4	92919810	1	Plug
5	92290162	1	Seal
6	92919554	1	Valve
7	92490358	1	Tube (Nylon) 0.75m
8	54508866	1	Bracket
9	92715051	2	Connector
10	92185016	1	Elbow
11	92823913	2	Elbow
*12	93163897	1	Decal GB,D,F
13	92067982	1	Tube (Nylon) 0.75m
14	–		
15	54619374	1	Pipe
16	92896158	2	Screw
17	92473594	2	Nut
18	92472638	2	Screw

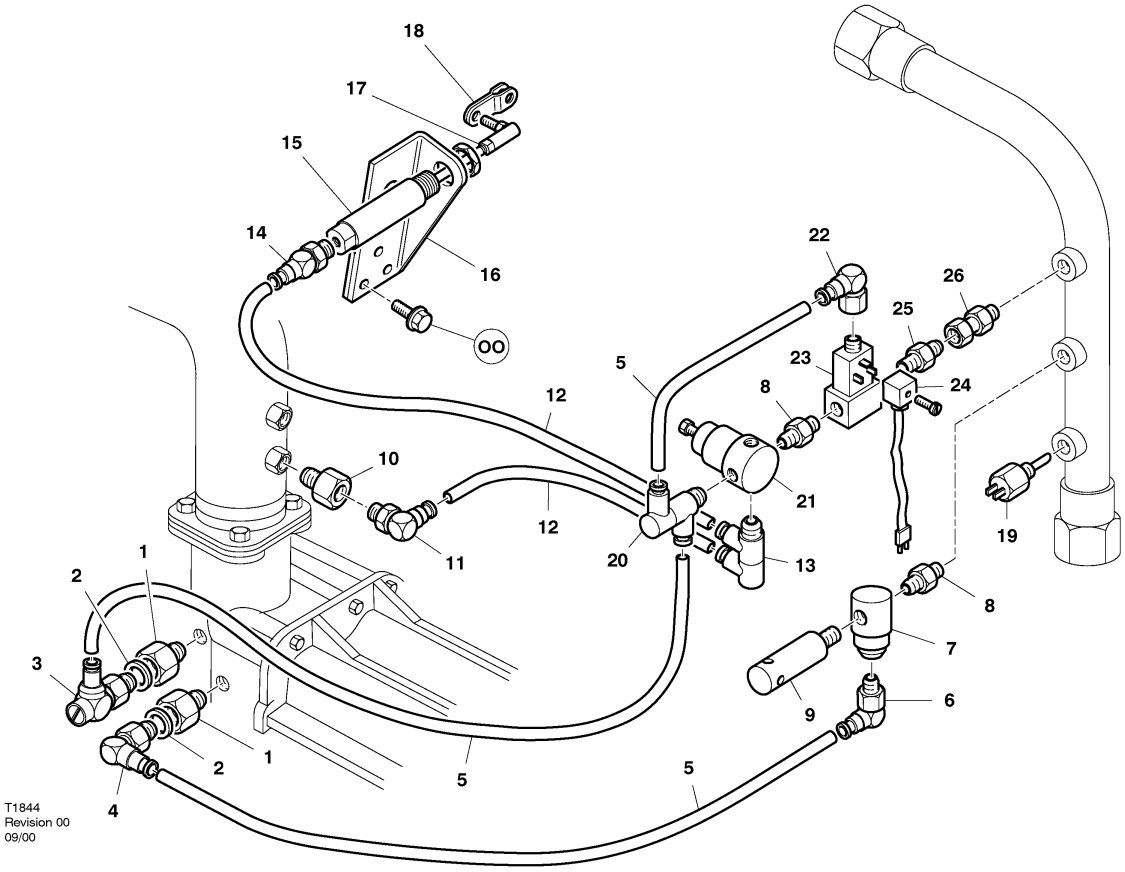

Item	ccn	Qty.	Description
1	92788918	2	Adaptor
2	92293661	2	Washer
3	93174175	1	Valve, check
4	54403266	1	Elbow
5	92799378	AR	Tube (Nylon) 8mm
6	54403266	1	Elbow
7	89253991	1	Valve, blowdown
8	92549369	2	Connector
9	92549369	1	Orifice, silencer
10	92863810	1	Adaptor
11	54403266	1	Elbow
12	92490358	AR	Tube (Nylon) 6mm
13	92794266	1	Elbow
14	92715051	1	Connector
15	54440102	1	Cylinder
16	54438213	1	Bracket
17	54493085	1	Ball–joint
18	54438239	1	Link
19	92762756	1	Sensor, temperature
20	92799436	1	Elbow
21	35355106	1	Regulator
22	92799444	1	Elbow
23	92793124	1	Valve, solenoid
24	89303655	1	Harness
25	92173780	1	Connector
26	93152593	1	Adaptor

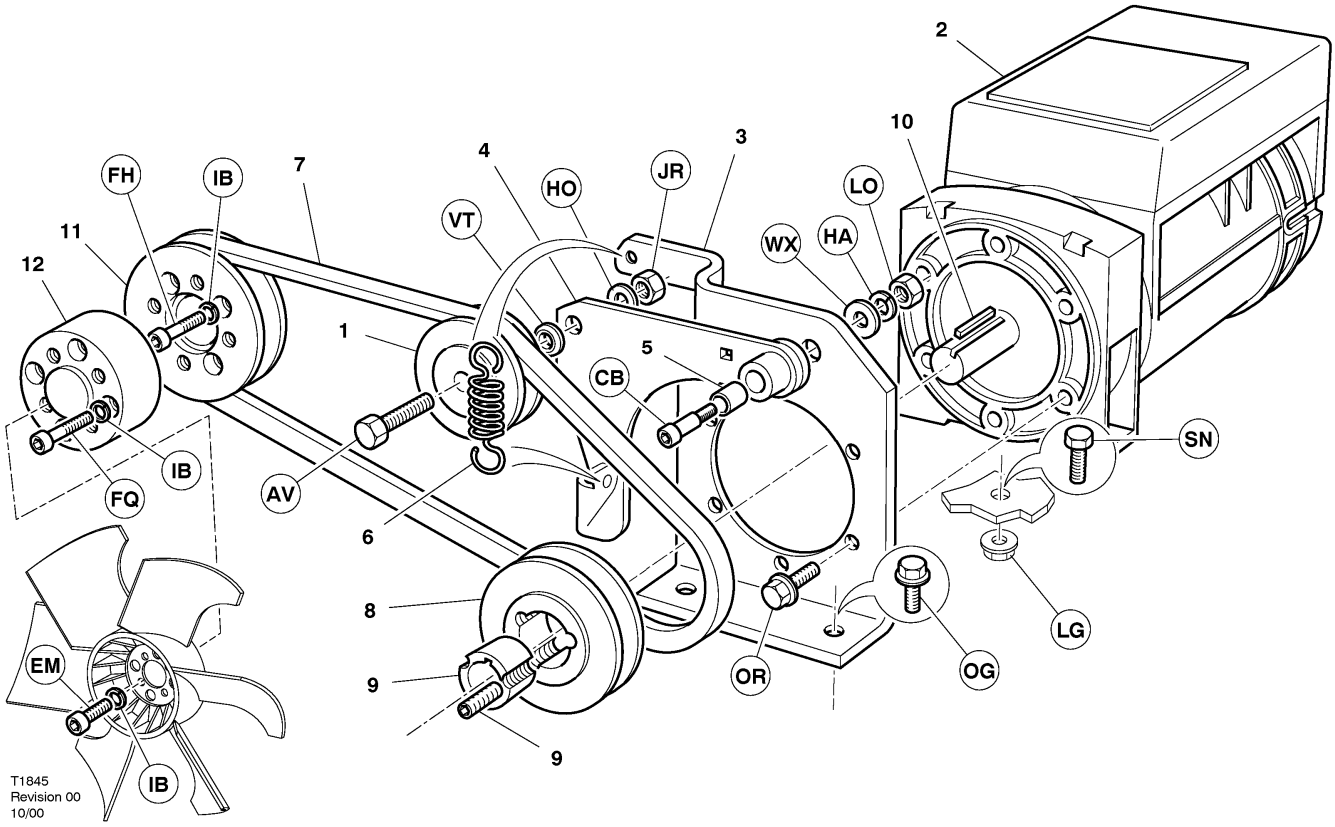

Item	ccn	Qty.	Description
1	92690890	1	Pulley
2	89230494	1	Generator 400V
2	88123229	1	Generator 110 / 230V
3	89231138	1	Bracket
4	89231146	1	Lever
5	35320688	1	Bush
6	35579523	1	Spring
7	54605993	1	Belt, drive 7/31
7	54581939	1	Belt, drive 7/41
8	92855634	1	Pulley
9	88091889	1	Bush
10	–	1	Key
11	54605985	1	Pulley 7/31
11	54581160	1	Pulley 7/41
*12	54581186	1	Spacer – Fan
*13–15	92699412	1	Kit, earth spike
*13	92699420	1	Earth spike
*14	92699438	1	Cable, earth
*15	93181366	1	Stud Earth point

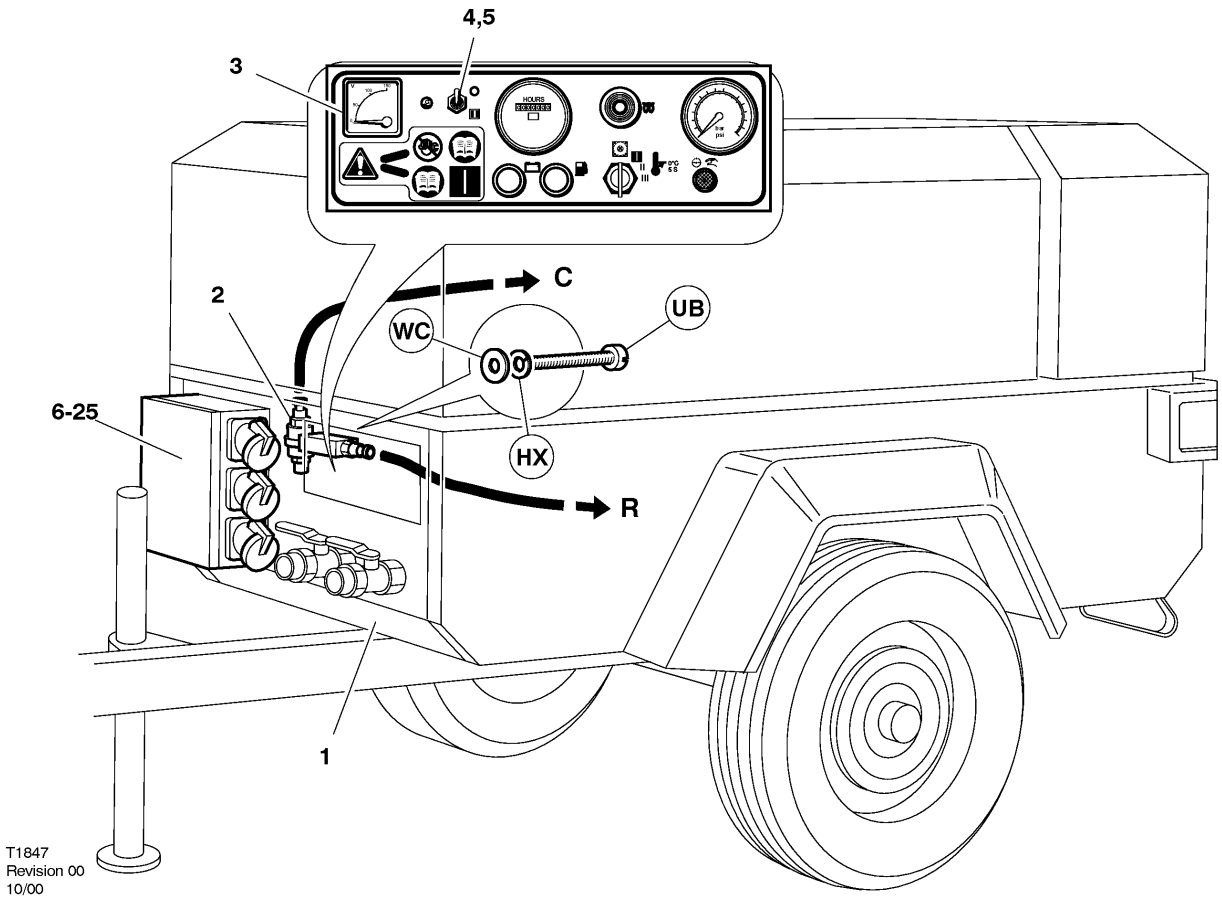

Item	ccn	Qty.	Description
1	54609706	1	Panel, front WDG
2	92856707	1	Valve, solenoid
3–5	54585062	1	Panel, instrument (7/31)
3–5	54585096	1	Panel, instrument (7/41)
3	89204648	1	Voltmeter 0–300V
4	54584511	1	Switch
5	54637061	1	Harness, voltmeter
6–25	54570544	1	Electrical socket box assembly 110V
*6	89283527	1	Box, electrical socket 110V
*7	89231716	1	Earth leakage module
*8	89205397	3	Terminal, end stop
*9	88123153	1	Harness, alternator
*10	54582010	1	Harness, generator control panel
*11	92876887	2	Holder, fuse
*12	93478899	2	Fuse 1A
*13	89205355	1	Contactor
*14	89231732	1	Circuit breaker 63A
*15	89231690	1	Socket, electrical outlet 115V, 32A
*16	89205371	2	Socket, electrical outlet 115V, 16A
*17	93174118	2	Circuit breaker 16A
*18	89231724	1	Circuit breaker 32A
*19	92951417	2	Resistor 2,2K
*20	89232151	1	Switch, test push button (Grey)
*21	89232177	1	Switch, contact
22	–		
*23	89249585	1	Terminal, contact block
*24	92829308	1	Key Box, electrical socket
*25	92859560	1	Lock Box, electrical socket

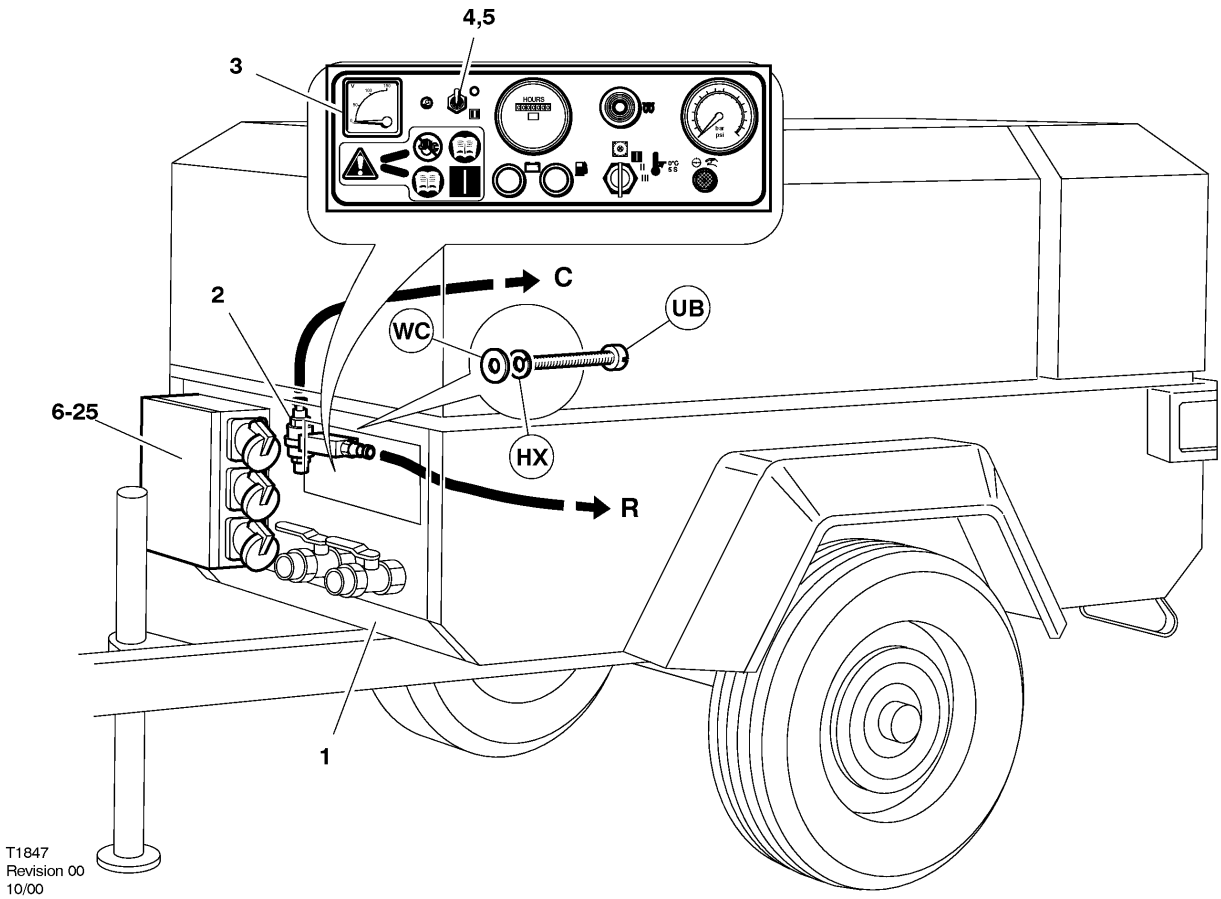

Item	ccn	Qty.	Description
1	54609706	1	Panel, front WDG
2	92856707	1	Valve, solenoid
3–5	54585062	1	Panel, instrument (7/31)
3–5	54585096	1	Panel, instrument (7/41)
3	89204648	1	Voltmeter 0–300V
4	54584511	1	Switch
5	54637061	1	Harness, voltmeter
6–25	89230536	1	Electrical socket box assembly 230V
*6	89231021	1	Box, electrical socket 230V
*7	89231716	1	Earth leakage module
*8	89205397	3	Terminal, end stop
*9	88123153	1	Harness, alternator
*10	89204572	1	Harness, generator control panel
*11	92876887	2	Holder, fuse
*12	93478899	2	Fuse 1A
*13	89205355	1	Contactor
14	–		
*15	89231708	2	Socket, electrical outlet 230V, 32A
*16	89235389	2	Socket, electrical outlet 230V, 16A
*17	89231740	2	Circuit breaker 16A
*18	89231724	1	Circuit breaker 32A
*19	92951417	1	Resistor 2,2K
*20	89232169	1	Switch, test push button (Grey)
*21	89232177	1	Switch, contact
22	–		
*23	89249585	1	Terminal, contact block
*24	92829308	1	Key Box, electrical socket
*25	92859560	1	Lock Box, electrical socket

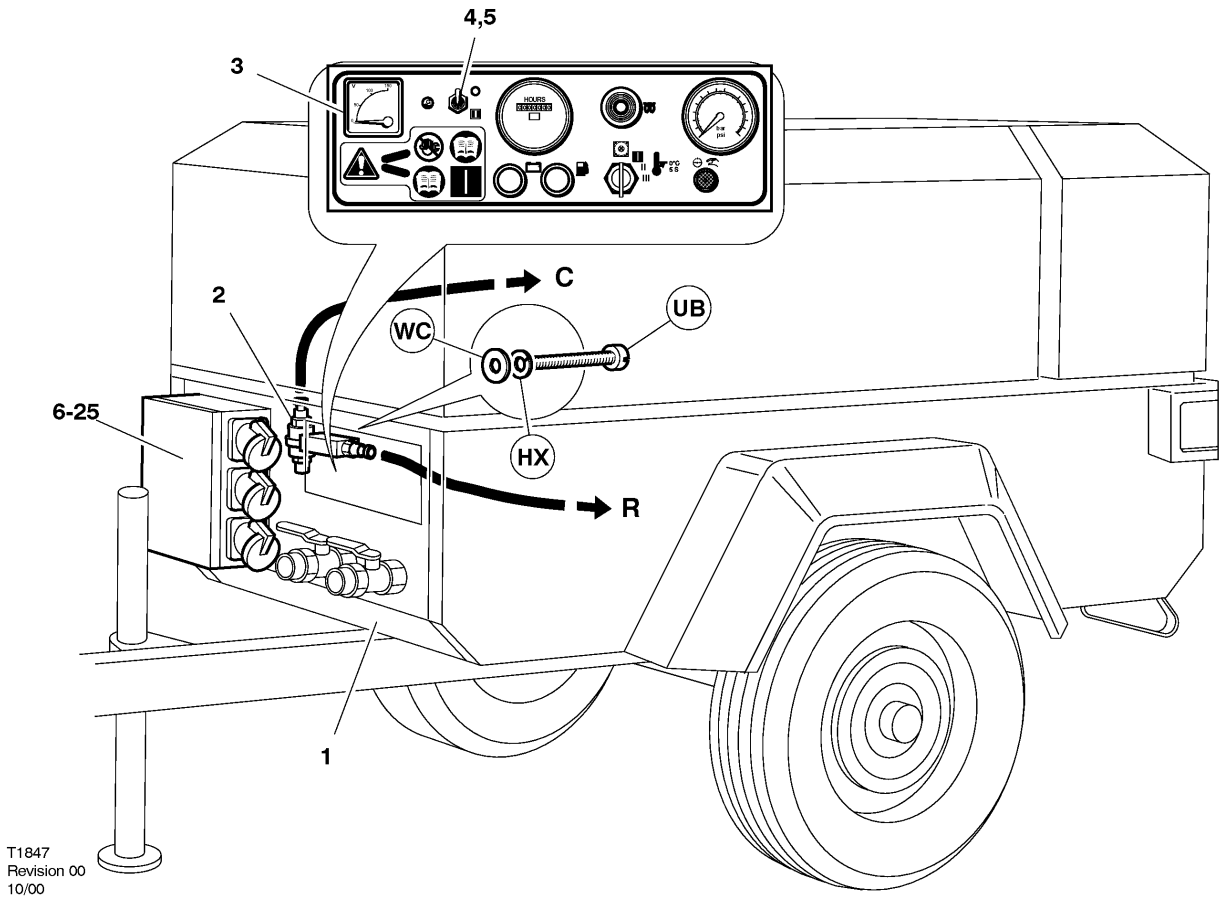

Item	ccn	Qty.	Description
1	54609706	1	Panel, front WDG
2	92856707	1	Valve, solenoid
3–5	54585070	1	Panel, instrument (7/31)
3–5	54585104	1	Panel, instrument (7/41)
3	89231005	1	Voltmeter 0–600V
4	54584511	1	Switch
5	54637061	1	Harness, voltmeter
6–25	54570585	1	Electrical socket box assembly (CE)
6–25	54570593	1	Electrical socket box assembly (SCHUKO)
*6	89231021	1	Box, electrical socket
*7	89230577	1	Earth leakage module
*8	89205397	3	Terminal, end stop
*9	89231013	1	Harness, alternator
*10	54582010	1	Harness, generator control panel
*11	92876887	2	Holder, fuse
*12	93478899	2	Fuse 1A
*13	89205355	1	Contactor
*14	89231740	1	Circuit breaker 10A
*15	89230585	1	Socket, electrical outlet 400V, 3Ph 16A
*16	89235389	2	Socket, electrical outlet 230V, 1Ph 16A
*17	89230551	2	Circuit breaker 16A
*18	92951417	2	Resistor 2,2K
*19	89248678	1	Resistor, heatsink
*20	89232151	1	Switch, test push button (Grey)
*21	89232177	3	Switch, contact
*22	89249577	2	Switch, auxilliary contact MCB
*23	89249585	1	Terminal, contact block
*24	92829308	1	Key Box, electrical socket
*25	92859560	1	Lock Box, electrical socket

Item	Qty.	Description / ccn
1–4	1	**85448686**
	GB	**KIT – 500 HOUR**
	F	**KIT 500 HEURES**
	P	**KIT 500 HORAS**
	I	**KIT 500 ORE**
	E	**KIT DE 500 HORAS**
	NL	**500 UUR SET**
	D	**KIT – 500 BETRIEBSSTUNDEN**
	DK	**500 TIMERS SÆT**
	S	**500 TIM. SATS**
	N	**500 TIMERS SETT**
	SF	**500 TUNNIN SARJA**
1	1	**54429675**
	GB	Element, oil filter (engine)
	F	Elément, filtre à huile (moteur)
	P	Elemento, filtro óleo (motor)
	I	Elemento filtro oilio (motore)
	E	Elemento filtro de aceite (motor)
	NL	Element, oliefilter (motor)
	D	Ölfilterelement (Motor)
	DK	Oliefilterelement (motor)
	S	Oljefilterinsats (motor)
	N	Motoroljefilter
	SF	Panos, öljynsuodatin (moottori)
2	1	**54381306**
	GB	Element, fuel filter
	F	Elément, filtre à carburant
	P	Elemento filtro de combustivel
	I	Elemento filtro nafta
	E	Elemento filtro de combustible
	NL	Brandstoffilter element
	D	Kraftstoffilter element
	DK	Brændstoffilterelement
	S	Bränslefilterinsats
	N	Brennstoff – filter
	SF	Panos, polttoainesuodatin
3	1	**36897353**
	GB	Element, oil filter (airend)
	F	Elément, filtre à huile (compresseur)
	P	Elemento, filtro óleo (compressor)
	I	Elemento filtro oilio (compressore)
	E	Elemento filtro de aceite (unidad compresora)
	NL	Element, oliefilter (kompressor)
	D	Ölfilterelement (Verdichterblock)
	DK	Oliefilterelement for luftende
	S	Oljefilterinsats (kompressor)
	N	Kompressoroljefilter
	SF	Panos, öljynsuodatin (paineilmapuoli)
4	1	**54525530**
	GB	Element, water separator
	F	Elément séparateur
	P	Elemento, separador
	I	Elemento separatore
	E	Elemento separador
	NL	Afscheider element
	D	Abscheiderselement
	DK	Filter element, separator
	S	Separatorfilterinsats
	N	Element
	SF	Panos, erotin

Item	Qty.	Description / ccn
1–5	1	**85448694**
	GB	**KIT – 1000 HOUR**
	F	**KIT 1000 HEURES**
	P	**KIT 1000 HORAS**
	I	**KIT 1000 ORE**
	E	**KIT DE 1000 HORAS**
	NL	**1000 UUR SET**
	D	**KIT – 1000 BETRIEBSSTUNDEN**
	DK	**1000 TIMERS SÆT**
	S	**1000 TIM. SATS**
	N	**1000 TIMERS SETT**
	SF	**1000 TUNNIN SARJA**
1	1	**54429675**
	GB	Element, oil filter (engine)
	F	Elément, filtre à huile (moteur)
	P	Elemento, filtro óleo (motor)
	I	Elemento filtro oilio (motore)
	E	Elemento filtro de aceite (motor)
	NL	Element, oliefilter (motor)
	D	Ölfilterelement (Motor)
	DK	Oliefilterelement (motor)
	S	Oljefilterinsats (motor)
	N	Motoroljefilter
	SF	Panos, öljynsuodatin (moottori)
2	1	**54381306**
	GB	Element, fuel filter
	F	Elément, filtre à carburant
	P	Elemento filtro de combustivel
	I	Elemento filtro nafta
	E	Elemento filtro de combustible
	NL	Brandstoffilter element
	D	Kraftstoffilter element
	DK	Brændstoffilterelement
	S	Bränslefilterinsats
	N	Brennstoff – filter
	SF	Panos, polttoainesuodatin

Item	Qty.	Description / ccn
3	1	**36897353**
	GB	Element, oil filter (airend)
	F	Elément, filtre à huile (compresseur)
	P	Elemento, filtro óleo (compressor)
	I	Elemento filtro oilio (compressore)
	E	Elemento filtro de aceite (unidad compresora)
	NL	Element, oliefilter (kompressor)
	D	Ölfilterelement (Verdichterblock)
	DK	Oliefilterelement for luftende
	S	Oljefilterinsats (kompressor)
	N	Kompressoroljefilter
	SF	Panos, öljynsuodatin (paineilmapuoli)
4	1	**54525530**
	GB	Element, water separator
	F	Elément séparateur
	P	Elemento, separador
	I	Elemento separatore
	E	Elemento separador
	NL	Afscheider element
	D	Abscheiderselement
	DK	Filter element, separator
	S	Separatorfilterinsats
	N	Element
	SF	Panos, erotin
5	1	**89232474**
	GB	Element, air filter
	F	Elément, filtre à air
	P	Elemento de filtro de ar
	I	Elemento filtro aria
	E	Elemento filtro de aire
	NL	Luchtfilter element
	D	Luftfilterelement
	DK	Luftfilterelement
	S	Luftfilterinsats
	N	Luftfilter
	SF	Panos, ilmansuodatin

1–40	**1**	**85448389**
	GB	**KIT – SERVICE (7/31)**
	F	**KIT – ENTRETIEN (7/31)**
	P	**KIT DE SERVICE (7/31)**
	I	**KIT – SERVIZIO (7/31)**
	E	**KIT DE SERVICIO (7/31)**
	NL	**KIT – SERVICE (7/31)**
	D	**WARTUNGSATZ (7/31)**
	DK	**SERVICE – KIT (7/31)**
	S	**SERVICE SATS (7/31)**
	N	**SERVICE – SETT (7/31)**
	SF	**SARJA – HUOLTO (7/31)**

1	**1**	**35300615**
	GB	Indicator, air restriction
	F	Voyant, restriction d'air
	P	Indicador, restriçao de ar
	I	Indicatore restrizione di aria
	E	Indicador limitación de aire
	NL	Indicateur luchtweerstand
	D	Anzeige, Luftbegrenzung
	DK	Smuds indikator
	S	Dammindikator
	N	Luftindikator
	SF	Merkkivalo, ilmakanavatukos

2	**1**	**35322379**
	GB	Valve, blowdown
	F	Electrovanne de mise à vide
	P	Válvula de descarga
	I	Valvola di scarico
	E	Válvula de purga
	NL	Afblaasklep
	D	Abblaseventil
	DK	Blow down ventil
	S	Avblåsningsventil
	N	Avblåsningsventil
	SF	Venttiili, paineenalennus–

3	**1**	**35327691**
	GB	Switch, water temperature
	F	Sécurité température d'eau
	P	Interruptor temperatura
	I	Interrutore alta temperatura elevada da água
	E	Interruptor de temperatura alta acqua
	NL	Watertemperatuur schakel aar del agua
	D	Wassertemperaturschalter
	DK	Vandtemperaturafbryder
	S	Hög kylvattentemp. vakt
	N	Vanntemperaturbryter
	SF	Veden lämpötilakytkin

4	**1**	**35355106**
	GB	Regulator
	F	Régulateur
	P	Regulador
	I	Regolatore
	E	Regulador
	NL	Regulateur
	D	Regler
	DK	Regulator
	S	Regulator
	N	Regulator
	SF	Säädin

5	**1**	**35596436**
	GB	Switch, temperature
	F	Sécurité température
	P	Interruptor temperatura
	I	Interruttore, temperatura
	E	Interruptor de temperatura
	NL	Temperatuurschakelaar
	D	Schalter, Temperatur
	DK	Termostat
	S	Temperaturvakt
	N	Temperatur vakt
	SF	Kytkin, lämpötila

6	**1**	**36878379**
	GB	Switch, oil pressure
	F	Interrupteur, pression d'huile
	P	Interruptor da pressão do óleo
	I	Interruttore, pressione olio
	E	Interruptor, presión del aceite
	NL	Schakelaar, olie druk
	D	Schalter, Öldruck
	DK	Kontakt, olietryk
	S	Oljetrycksbtytare
	N	Oljetrykksbryter
	SF	Kytkin, öljynpaine

7	**1**	**36897353**
	GB	Element, oil filter (airend)
	F	Elément, filtre à huile (compresseur)
	P	Elemento, filtro óleo (compressor)
	I	Elemento filtro oilio (compressore)
	E	Elemento filtro de aceite (unidad compresora)
	NL	Element, oliefilter (kompressor)
	D	Ölfilterelement (Verdichterblock)
	DK	Oliefilterelement for luftende
	S	Oljefilterinsats (kompressor)
	N	Kompressoroljefilter
	SF	Panos, öljynsuodatin (paineilmapuoli)

8	**1**	**36921690**
	GB	Orifice, sonic
	F	Orifice, sonique
	P	Orificio, sónico
	I	Orifizio acustico
	E	Orificio sónico
	NL	Sproeier
	D	Schallöffnung
	DK	Lydåbning
	S	Ljudöppning
	N	Dyse
	SF	Aukko, akustinen

9	**1**	**49807613**
	GB	Valve, relief
	F	Soupape de sûreté
	P	Válvula de descarga
	I	Valvola di sicurezza
	E	Válvula de desahogo
	NL	Ontlastklep
	D	Entlastungsventil
	DK	Overtryksventil
	S	Reduceringsventil
	N	Avlastningsventil
	SF	Venttiili, paineenalennus–

10	**1**	**49840853**
	GB	Kit, gasket/'O' Ring engine
	F	KIT – Joint/Joint torique
	P	Kit – Juntas/'O'Ring
	I	Kit – Guarnizioni/O–Ring
	E	Kit de Juntas/Tóricas
	NL	Kit – Pakking/'O'Ring
	D	Dichtungs / O–Ring–Satz
	DK	Paknings– og O–Rings sæt
	S	Packnings–/O–Ringsats
	N	Pakningsett
	SF	Sarja, tiiviste/O–rengas

11	**1**	**49841315**
	GB	Hose, fuel
	F	Tuyau flexible à carburant
	P	Tubo flexível, combustível
	I	Flessibile, carburante
	E	Manguera, combustible
	NL	Slang, brandstof
	D	Schlauch, Kraftstoff
	DK	Slange, brændstof–
	S	Slang, bränsle
	N	Drivstoffslange
	SF	Polttoaineletku

12	**3**	**49841323**
	GB	Nozzle, injector
	F	Gicleur, Injecteur
	P	Bico, injector
	I	Ugello, iniettore
	E	Boquilla de inyector
	NL	Mondstuk, verstuiver
	D	Düse, Einspritz~
	DK	Forstøver
	S	Insprutningsmunstycke
	N	Innsprøytningsdyse
	SF	suutin, suihku–

13	**1**	**54381306**
	GB	Element, fuel filter
	F	Elément, filtre à carburant
	P	Elemento filtro de combustivel
	I	Elemento filtro nafta
	E	Elemento filtro de combustible
	NL	Brandstoffilter element
	D	Kraftstoffilter element
	DK	Brændstoffilterelement
	S	Bränslefilterinsats
	N	Brennstoff – filter
	SF	Panos, polttoainesuodatin

14	**1**	**54385836**
	GB	Thermostat
	F	Thermostat
	P	Termostato
	I	Termostato
	E	Termostato
	NL	Thermostaat
	D	Thermostat
	DK	Termostat
	S	Termostat
	N	Termostat
	SF	Termostaatti

15	**3**	**54385893**
	GB	Glowplug
	F	Bobine de préchauffage
	P	Bobine pré–aquecimento
	I	Resistenza preriscaldamento
	E	Bobina de precalentamiento
	NL	Gloeispiraal
	D	Vorglühwendel
	DK	Glødespole
	S	Glödspiral
	N	Glødespiral
	SF	Esilämmityskela

16	**1**	**54429675**
	GB	Element, oil filter (engine)
	F	Elément, filtre à huile (moteur)
	P	Elemento, filtro óleo (motor)
	I	Elemento filtro oilio (motore)
	E	Elemento filtro de aceite (motor)
	NL	Element, oliefilter (motor)
	D	Ölfilterelement (Motor)
	DK	Oliefilterelement (motor)
	S	Oljefilterinsats (motor)
	N	Motoroljefilter
	SF	Panos, öljynsuodatin (moottori)

17	**1**	**54429717**
	GB	Valve, PCV
	F	Valve
	P	Válvula
	I	Valvola
	E	Válvula Afsluiter
	NL	Ventil
	D	Ventil
	DK	Ventil
	S	Ventil
	N	Venttiili
	SF	

18	**1**	**54430707**
	GB	Solenoid, stop
	F	Solénoïde, arrêt
	P	Solenóide de paragem
	I	Solenoide stop
	E	Solenoide de parada
	NL	Relais, stop
	D	Magnetschalter Stop
	DK	Magnetventil, stands
	S	Solenoid. stopp
	N	Stoppsolenoid
	SF	Solenoidi, pysäytys–

19	**1**	**54493085**
	GB	Ball–joint
	F	Joint à rotule
	P	Rótula
	I	Giunto sferico
	E	Junta de bola
	NL	Stangkop
	D	Kugelgelenk
	DK	Kugleled
	S	Kulled
	N	Kuleledd
	SF	Kuulanivel

20	**1**	**54525530**
	GB	Element, water separator
	F	Elément séparateur
	P	Elemento, separador
	I	Elemento separatore
	E	Elemento separador
	NL	Afscheider element
	D	Abscheiderselement
	DK	Filter element, separator
	S	Separatorfilterinsats
	N	Element
	SF	Panos, erotin

21	**1**	**54526801**
	GB	Fan belt
	F	Courroie du ventilateur
	P	Correia de ventoinha
	I	Cinghia della ventola
	E	Correa del ventilador
	NL	Ventilatorsnaar
	D	Lüfterantriebsriemen
	DK	Ventilatorrem
	S	Fläktrem
	N	Vifterem
	SF	Tuuletinhihna

22	**1**	**54533047**
	GB	Cap, fuel filler
	F	Bouchon, réservoir de carburant
	P	Tampão, bocal gasóleo
	I	Tappo del serbatoio carburante
	E	Tapón boca de combustible
	NL	Tankdop
	D	Kraftstoffeinfüllverschluß
	DK	Brændstofdæksel
	S	Bränslelock
	N	Tanklokk
	SF	kansi, polttoaineen täyttöaukon

23	**1**	**54537303**
	GB	Resistor
	F	Résistance
	P	Resistencia
	I	Resistenza
	E	Resistencia
	NL	Weerstand
	D	Widerstand
	DK	Modstand
	S	Motstånd
	N	Motstand
	SF	Vastus

24	**1**	**54540661**
	GB	Cap, header tank
	F	Couvercle
	P	Tampão
	I	Tappo
	E	Caperuza
	NL	Kap
	D	Kappe
	DK	Dæksel
	S	Lock
	N	Hette
	SF	Kansi

25	**1**	**54596705**
	GB	Element, separator
	F	Elément séparateur
	P	Elemento, separador
	I	Elemento separatore
	E	Elemento separador
	NL	Afscheider element
	D	Abscheiderselement
	DK	Filter element, separator
	S	Separatorfilterinsats
	N	Element
	SF	Panos, erotin

26	**1**	**85448397**
	GB	Kit, gasket/'O' Ring
	F	KIT – Joint/Joint torique
	P	Kit – Juntas/'O'Ring
	I	Kit – Guarnizioni/O–Ring
	E	Kit de Juntas/Tóricas
	NL	Kit – Pakking/'O'Ring
	D	Dichtungs / O–Ring–Satz
	DK	Paknings– og O–Rings sæt
	S	Packnings–/O–Ringsats
	N	Pakningsett
	SF	Sarja, tiiviste/O–rengas

27	**1**	**88082656**
	GB	Plug, oil drain
	F	Bouchon
	P	Tomada
	I	Tappo
	E	Tapón
	NL	Plug
	D	Stecker
	DK	Prop
	S	Plugg
	N	Plugg
	SF	Pistoke

28	**1**	**89232474**
	GB	Element, air filter
	F	Elément, filtre à air
	P	Elemento de filtro de ar
	I	Elemento filtro aria
	E	Elemento filtro de aire
	NL	Luchtfilter element
	D	Luftfilterelement
	DK	Luftfilterelement
	S	Luftfilterinsats
	N	Luftfilter
	SF	Panos, ilmansuodatin

29	**1**	**89284558**
	GB	Fuse
	F	Fusible
	P	Fusível
	I	Fusibili
	E	Fusibile
	NL	Zekering
	D	Sicherung
	DK	Sikring
	S	Säkring
	N	Sikring
	SF	Varoke

30	**1**	**92076173**
	GB	Relay
	F	Relais
	P	Relé
	I	Relé
	E	Relé
	NL	Relais
	D	Relais
	DK	Relæ
	S	Relä
	N	Rele
	SF	Rele

31	**1**	**92086719**
	GB	Key–switch
	F	Clef – commutateur
	P	Interruptor de chave
	I	Chiavetta interruttore
	E	Llave interruptor
	NL	Sleutel–schakelaar
	D	Schlüsselschalter
	DK	Tændingskontakt
	S	Tändningslås
	N	Nøkkelbryter
	SF	Virtalukko

32	**1**	**92294461**
	GB	Valve, hand
	F	Robinet de manoeuvre
	P	Válvula manual
	I	Valvola a mano
	E	Válvula de mano
	NL	Handklep
	D	Handventil
	DK	Håndventil
	S	Handventil
	N	Ventil
	SF	Venttiili, käsikäyttö–

33	**1**	**92306901**
	GB	Hourmeter
	F	Compteur horaire
	P	Conta–horas
	I	Contaore
	E	Horómetro
	NL	Urenteller
	D	Betriebsstunden–Zähler
	DK	Timetæller
	S	Timräknare
	N	Timeteller
	SF	Käyttötuntimittari

34	**1**	**92549369**
	GB	Orifice, silencer
	F	Orifice, silencieux
	P	Orificio, silenciador
	I	Orifizio, silenziatore
	E	Orificio silenciador
	NL	Sproeier, demper
	D	Schalldämpferöffnung
	DK	Åbning for lyddæmper
	S	Öppning, ljuddämpare
	N	Dyse med lyddemper
	SF	Aukko, äänenvaimentimen

35	**1**	**92762756**
	GB	Switch, temperature
	F	Sécurité température
	P	Interruptor temperatura
	I	Interruttore, temperatura
	E	Interruptor de temperatura
	NL	Temperatuurschakelaar
	D	Schalter, Temperatur
	DK	Termostat
	S	Temperaturvakt
	N	Temperatur vakt
	SF	Kytkin, lämpötila

36	**1**	**92790187**
	GB	Gauge, pressure
	F	Manométre
	P	Manometro
	I	Manometro pressione
	E	Manómetro
	NL	Manometer
	D	Druckanzeige
	DK	Manometer
	S	Manometer
	N	Manometer
	SF	Mittari, paine–

37	**2**	**92969914**
	GB	Diode
	F	Diode
	P	Diodo
	I	Diodo
	E	Diodo
	NL	Diode
	D	Diode
	DK	Diode
	S	Diod
	N	Diode
	SF	Diodi

38	**1**	**93159655**
	GB	Valve, safety
	F	Soupape de sécurité
	P	Válvula de segurança
	I	Valvola di sicurezza
	E	Válvula de seguridad
	NL	Veiligheidsklep
	D	Sicherheitsventil
	DK	Sikkerhedsventil
	S	Säkerhetsventil
	N	Sikkerhetsventil
	SF	Venttiili, varo–

39	**1**	**93174175**
	GB	Valve, check
	F	Soupape d'arrêt
	P	Válvula de retenção
	I	Valvola di controllo
	E	Válvula antirretorno
	NL	Terugslagklep
	D	Rückschlagventil
	DK	Kontra ventil
	S	Backventil
	N	Tilbakeslagsventil
	SF	Venttiili, takaisku–

40	**1**	**93466381**
	GB	Light, indicator (Amber)
	F	Indicateur (Orange)
	P	Indicador (Ambar)
	I	Indicatore (Ambra)
	E	Indicador (Ambar)
	NL	Indicateur (Oranje)
	D	Anzeiger (orange)
	DK	Indikator (Gul)
	S	Indikator (Gul)
	N	Indikator (Gul)
	SF	Merkkivalo (keltainen)

1–41	**1**	**85448371**
	GB	**KIT – SERVICE (7/41)**
	F	**KIT – ENTRETIEN (7/41)**
	P	**KIT DE SERVICE (7/41)**
	I	**KIT – SERVIZIO (7/41)**
	E	**KIT DE SERVICIO (7/41)**
	NL	**KIT – SERVICE (7/41)**
	D	**WARTUNGSATZ (7/41)**
	DK	**SERVICE – KIT (7/41)**
	S	**SERVICE SATS (7/41)**
	N	**SERVICE – SETT (7/41)**
	SF	**SARJA – HUOLTO (7/41)**

1	**1**	**35300615**
	GB	Indicator, air restriction
	F	Voyant, restriction d'air
	P	Indicador, restriçao de ar
	I	Indicatore restrizione di aria
	E	Indicador limitación de aire
	NL	Indicateur luchtweerstand
	D	Anzeige, Luftbegrenzung
	DK	Smuds indikator
	S	Dammindikator
	N	Luftindikator
	SF	Merkkivalo, ilmakanavatukos

2	**1**	**35322379**
	GB	Valve, blowdown
	F	Electrovanne de mise à vide
	P	Válvula de descarga
	I	Valvola di scarico
	E	Válvula de purga
	NL	Afblaasklep
	D	Abblaseventil
	DK	Blow down ventil
	S	Avblåsningsventil
	N	Avblåsningsventil
	SF	Venttiili, paineenalennus–

3	**1**	**35327691**
	GB	Switch, water temperature
	F	Sécurité température d'eau
	P	Interruptor temperatura
	I	Interrutore alta temperatura elevada da água
	E	Interruptor de temperatura alta acqua
	NL	Watertemperatuur schakel aar del agua
	D	Wassertemperaturschalter
	DK	Vandtemperaturafbryder
	S	Hög kylvattentemp. vakt
	N	Vanntemperaturbryter
	SF	Veden lämpötilakytkin

4	**1**	**35355106**
	GB	Regulator
	F	Régulateur
	P	Regulador
	I	Regolatore
	E	Regulador
	NL	Regulateur
	D	Regler
	DK	Regulator
	S	Regulator
	N	Regulator
	SF	Säädin

5	**1**	**35596436**
	GB	Switch, temperature
	F	Sécurité température
	P	Interruptor temperatura
	I	Interruttore, temperatura
	E	Interruptor de temperatura
	NL	Temperatuurschakelaar
	D	Schalter, Temperatur
	DK	Termostat
	S	Temperaturvakt
	N	Temperatur vakt
	SF	Kytkin, lämpötila

6	**1**	**36878379**
	GB	Switch, oil pressure
	F	Interrupteur, pression d'huile
	P	Interruptor da pressão do óleo
	I	Interruttore, pressione olio
	E	Interruptor, presión del aceite
	NL	Schakelaar, olie druk
	D	Schalter, Öldruck
	DK	Kontakt, olietryk
	S	Oljetrycksbtytare
	N	Oljetrykksbryter
	SF	Kytkin, öljynpaine

7	**1**	**36880706**
	GB	Switch, temperature
	F	Sécurité température
	P	Interruptor temperatura
	I	Interruttore, temperatura
	E	Interruptor de temperatura
	NL	Temperatuurschakelaar
	D	Schalter, Temperatur
	DK	Termostat
	S	Temperaturvakt
	N	Temperatur vakt
	SF	Kytkin, lämpötila

8	**1**	**36897353**
	GB	Element, oil filter (airend)
	F	Elément, filtre à huile (compresseur)
	P	Elemento, filtro óleo (compressor)
	I	Elemento filtro oilio (compressore)
	E	Elemento filtro de aceite (unidad compresora)
	NL	Element, oliefilter (kompressor)
	D	Ölfilterelement (Verdichterblock)
	DK	Oliefilterelement for luftende
	S	Oljefilterinsats (kompressor)
	N	Kompressoroljefilter
	SF	Panos, öljynsuodatin (paineilmapuoli)

9	**1**	**49807613**
	GB	Valve, relief
	F	Soupape de sûreté
	P	Válvula de descarga
	I	Valvola di sicurezza
	E	Válvula de desahogo
	NL	Ontlastklep
	D	Entlastungsventil
	DK	Overtryksventil
	S	Reduceringsventil
	N	Avlastningsventil
	SF	Venttiili, paineenalennus–

10	**1**	**49840762**
	GB	Kit, gasket/'O' Ring engine
	F	KIT – Joint/Joint torique
	P	Kit – Juntas/'O'Ring
	I	Kit – Guarnizioni/O–Ring
	E	Kit de Juntas/Tóricas
	NL	Kit – Pakking/'O'Ring
	D	Dichtungs / O–Ring–Satz
	DK	Paknings– og O–Rings sæt
	S	Packnings–/O–Ringsats
	N	Pakningsett
	SF	Sarja, tiiviste/O–rengas

11	**1**	**49841315**
	GB	Hose, fuel
	F	Tuyau flexible à carburant
	P	Tubo flexível, combustível
	I	Flessibile, carburante
	E	Manguera, combustible
	NL	Slang, brandstof
	D	Schlauch, Kraftstoff
	DK	Slange, brændstof–
	S	Slang, bränsle
	N	Drivstoffslange
	SF	Polttoaineletku

12	**4**	**49841323**
	GB	Nozzle, injector
	F	Gicleur, Injecteur
	P	Bico, injector
	I	Ugello, iniettore
	E	Boquilla de inyector
	NL	Mondstuk, verstuiver
	D	Düse, Einspritz~
	DK	Forstøver
	S	Insprutningsmunstycke
	N	Innsprøytningsdyse
	SF	suutin, suihku–

13	**1**	**54381306**
	GB	Element, fuel filter
	F	Elément, filtre à carburant
	P	Elemento filtro de combustivel
	I	Elemento filtro nafta
	E	Elemento filtro de combustible
	NL	Brandstoffilter element
	D	Kraftstoffilter element
	DK	Brændstoffilterelement
	S	Bränslefilterinsats
	N	Brennstoff – filter
	SF	Panos, polttoainesuodatin

14	**1**	**54385836**
	GB	Thermostat
	F	Thermostat
	P	Termostato
	I	Termostato
	E	Termostato
	NL	Thermostaat
	D	Thermostat
	DK	Termostat
	S	Termostat
	N	Termostat
	SF	Termostaatti

15	**4**	**54385893**
	GB	Glowplug
	F	Bobine de préchauffage
	P	Bobine pré–aquecimento
	I	Resistenza preriscaldamento
	E	Bobina de precalentamiento
	NL	Gloeispiraal
	D	Vorglühwendel
	DK	Glødespole
	S	Glödspiral
	N	Glødespiral
	SF	Esilämmityskela

16	**1**	**54429675**
	GB	Element, oil filter (engine)
	F	Elément, filtre à huile
	P	Elemento de filtro de óleo
	I	Elemento filtro olio
	E	Elemento filtro de aceite
	NL	Oliefilter element
	D	Ölfilter element
	DK	Oliefilterelement
	S	Oljefilterinsats
	N	Oljefilter
	SF	Panos, öljynsuodatin

17	**1**	**54429717**
	GB	Valve, PCV
	F	Valve
	P	Válvula
	I	Valvola
	E	Válvula
	NL	Afsluiter
	D	Ventil
	DK	Ventil
	S	Ventil
	N	Ventil
	SF	Venttiili

18	**1**	**54430707**
	GB	Solenoid, stop
	F	Solénoïde, arrêt
	P	Solenóide de paragem
	I	Solenoide stop
	E	Solenoide de parada
	NL	Relais, stop
	D	Magnetschalter Stop
	DK	Magnetventil, stands
	S	Solenoid. stopp
	N	Stoppsolenoid
	SF	Solenoidi, pysäytys–
19	**1**	**54493085**
	GB	Ball–joint
	F	Joint à rotule
	P	Rótula
	I	Giunto sferico
	E	Junta de bola
	NL	Stangkop
	D	Kugelgelenk
	DK	Kugleled
	S	Kulled
	N	Kuleledd
	SF	Kuulanivel
20	**1**	**54525530**
	GB	Element, water separator
	F	Elément séparateur
	P	Elemento, separador
	I	Elemento separatore
	E	Elemento separador
	NL	Afscheider element
	D	Abscheiderselement
	DK	Filter element, separator
	S	Separatorfilterinsats
	N	Element
	SF	Panos, erotin
21	**1**	**54526801**
	GB	Belt, fan
	F	Courroie, ventilateur
	P	Correia da ventoinha
	I	Cinghia, ventola
	E	Correa del ventilador
	NL	Ventilatorsnaar
	D	Riemen, Lüfterantriebs~
	DK	Rem, ventilator
	S	Fläktrem
	N	Vifterem
	SF	hihna, tuulettimen
22	**1**	**54533047**
	GB	Cap, fuel filler
	F	Bouchon, réservoir de carburant
	P	Tampão, bocal gasóleo
	I	Tappo del serbatoio carburante
	E	Tapón boca de combustible
	NL	Tankdop
	D	Kraftstoffeinfüllverschluß
	DK	Brændstofdæksel
	S	Bränslelock
	N	Tanklokk
	SF	kansi, polttoaineen täyttöaukon

23	**1**	**54540661**
	GB	Cap, header tank
	F	Couvercle
	P	Tampão
	I	Tappo
	E	Caperuza
	NL	Kap
	D	Kappe
	DK	Dæksel
	S	Lock
	N	Hette
	SF	Kansi
24	**1**	**54571906**
	GB	Resistor
	F	Résistance
	P	Resistencia
	I	Resistenza
	E	Resistencia
	NL	Weerstand
	D	Widerstand
	DK	Modstand
	S	Motstånd
	N	Motstand
	SF	Vastus
25	**1**	**54596705**
	GB	Element, separator
	F	Elément séparateur
	P	Elemento, separador
	I	Elemento separatore
	E	Elemento separador
	NL	Afscheider element
	D	Abscheiderselement
	DK	Filter element, separator
	S	Separatorfilterinsats
	N	Element
	SF	Panos, erotin
26	**1**	**85448397**
	GB	Kit, gasket/'O' Ring
	F	KIT – Joint/Joint torique
	P	Kit – Juntas/'O'Ring
	I	Kit – Guarnizioni/O–Ring
	E	Kit de Juntas/Tóricas
	NL	Kit – Pakking/'O'Ring
	D	Dichtungs / O–Ring–Satz
	DK	Paknings– og O–Rings sæt
	S	Packnings–/O–Ringsats
	N	Pakningsett
	SF	Sarja, tiiviste/O–rengas
27	**1**	**88082656**
	GB	Plug, oil drain
	F	Bouchon
	P	Tomada
	I	Tappo
	E	Tapón
	NL	Plug
	D	Stecker
	DK	Prop
	S	Plugg
	N	Plugg
	SF	Pistoke

28	**1**	**89232474**
	GB	Element, air filter
	F	Elément, filtre à air
	P	Elemento de filtro de ar
	I	Elemento filtro aria
	E	Elemento filtro de aire
	NL	Luchtfilter element
	D	Luftfilterelement
	DK	Luftfilterelement
	S	Luftfilterinsats
	N	Luftfilter
	SF	Panos, ilmansuodatin
29	**1**	**89232854**
	GB	Orifice, sonic
	F	Orifice, sonique
	P	Orificio, sónico
	I	Orifizio acustico
	E	Orificio sónico
	NL	Sproeier
	D	Schallöffnung
	DK	Lydåbning
	S	Ljudöppning
	N	Dyse
	SF	Aukko, akustinen
30	**1**	**89284558**
	GB	Fuse
	F	Fusible
	P	Fusível
	I	Fusibili
	E	Fusibile
	NL	Zekering
	D	Sicherung
	DK	Sikring
	S	Säkring
	N	Sikring
	SF	Varoke
31	**1**	**92076173**
	GB	Relay
	F	Relais
	P	Relé
	I	Relé
	E	Relé
	NL	Relais
	D	Relais
	DK	Relæ
	S	Relä
	N	Rele
	SF	Rele
32	**1**	**92086719**
	GB	Key–switch
	F	Clef – commutateur
	P	Interruptor de chave
	I	Chiavetta interruttore
	E	Llave interruptor
	NL	Sleutel–schakelaar
	D	Schlüsselschalter
	DK	Tændingskontakt
	S	Tändningslås
	N	Nøkkelbryter
	SF	Virtalukko

33	**1**	**92294461**
	GB	Valve, hand
	F	Robinet de manoeuvre
	P	Válvula manual
	I	Valvola a mano
	E	Válvula de mano
	NL	Handklep
	D	Handventil
	DK	Håndventil
	S	Handventil
	N	Ventil
	SF	Venttiili, käsikäyttö–
34	**1**	**92306901**
	GB	Hourmeter
	F	Compteur horaire
	P	Conta–horas
	I	Contaore
	E	Horómetro
	NL	Urenteller
	D	Betriebsstunden–Zähler
	DK	Timetæller
	S	Timräknare
	N	Timeteller
	SF	Käyttötuntimittari
35	**1**	**92549369**
	GB	Orifice, silencer
	F	Orifice, silencieux
	P	Orificio, silenciador
	I	Orifizio, silenziatore
	E	Orificio silenciador
	NL	Sproeier, demper
	D	Schalldämpferöffnung
	DK	Åbning for lyddæmper
	S	Öppning, ljuddämpare
	N	Dyse med lyddemper
	SF	Aukko, äänenvaimentimen
36	**1**	**92762756**
	GB	Switch, temperature
	F	Sécurité température
	P	Interruptor temperatura
	I	Interruttore, temperatura
	E	Interruptor de temperatura
	NL	Temperatuurschakelaar
	D	Schalter, Temperatur
	DK	Termostat
	S	Temperaturvakt
	N	Temperatur vakt
	SF	Kytkin, lämpötila
37	**1**	**92790187**
	GB	Gauge, pressure
	F	Manométre
	P	Manometro
	I	Manometro pressione
	E	Manómetro
	NL	Manometer
	D	Druckanzeige
	DK	Manometer
	S	Manometer
	N	Manometer
	SF	Mittari, paine–
38	**2**	**92969914**
	GB	Diode
	F	Diode
	P	Diodo
	I	Diodo
	E	Diodo
	NL	Diode
	D	Diode
	DK	Diode
	S	Diod
	N	Diode
	SF	Diodi
39	**1**	**93159655**
	GB	Valve, safety
	F	Soupape de sécurité
	P	Válvula de segurança
	I	Valvola di sicurezza
	E	Válvula de seguridad
	NL	Veiligheidsklep
	D	Sicherheitsventil
	DK	Sikkerhedsventil
	S	Säkerhetsventil
	N	Sikkerhetsventil
	SF	Venttiili, varo–
40	**1**	**93174175**
	GB	Valve, check
	F	Soupape d'arrêt
	P	Válvula de retenção
	I	Valvola di controllo
	E	Válvula antirretorno
	NL	Terugslagklep
	D	Rückschlagventil
	DK	Kontra ventil
	S	Backventil
	N	Tilbakeslagsventil
	SF	Venttiili, takaisku–
41	**1**	**93466381**
	GB	Light indicator (Amber)
	F	Indicateur (Orange)
	P	Indicador (Ambar)
	I	Indicatore (Ambra)
	E	Indicador (Ambar)
	NL	Indicateur (Oranje)
	D	Anzeiger (orange)
	DK	Indikator (Gul)
	S	Indikator (Gul)
	N	Indikator (Gul)
	SF	Merkkivalo (keltainen)
1–13	**1**	**85448397**
	GB	**KIT – GASKET/'O' RING (Airend)**
	F	**KIT – JOINTS/O–RING**
	P	**KIT – JUNTAS/'O'RING**
	I	**KIT – GUARNIZIONI/O–RING**
	E	**KIT DE JUNTAS/TÓRICAS**
	NL	**KIT – PAKKING/'O'RING**
	D	**DICHTUNGS / O–RING–SATZ**
	DK	**PAKNINGS– OG O–RINGS SÆT**
	S	**PACKNINGS–/O–RINGSATS**
	N	**PAKNINGSETT**
	SF	**SARJA – TIIVISTE/O–RENGAS**
1	**1**	**35279942**
	GB	'O'Ring, filler plug
	F	Joint torique, bouchon de remplissage
	P	'O–ring' , bujão enchimento
	I	O–ring, tappo di riempimento
	E	Junta tórica, tapón de llenado
	NL	O–Ring, vulplug
	D	O–Ring, Einfüllstopfen
	DK	'0'–ring, påfyldningsprop
	S	O–ring, påfyllningsplugg
	N	O–ring, påfyllingsplugg
	SF	O–rengas, täyttötulppa
2	**1**	**35375369**
	GB	Lipseal, driveshaft
	F	Joint à lèvres, arbre de transmission
	P	Retentor veio motor
	I	Paraolio, albero
	E	Sello labiado del eje motríz
	NL	Keerring aandrijfas
	D	Lippendichtung, Antriebswelle
	DK	Kanttætning, drivaksel
	S	Läpptätning, drivaxel
	N	Tetningsring – drivaksel
	SF	Huulitiiviste, vetoakselin
3	**1**	**35376359**
	GB	Seal, unloader
	F	Joint, vanne d'aspiration
	P	Vedante do descompressor
	I	Tenuta di scarico
	E	Obturador del descargador
	NL	Keerring, ontlast
	D	Dichtung, Entlastungsventil
	DK	Tåtning, Aflaster
	S	Tätning, Avlastare
	N	Forsegling, avlaster
	SF	Tiiviste, purkausventtiilin
4	**1**	**39404165**
	GB	'O' Ring, temperature switch
	F	Joint torique, commutateur de température
	P	'O' ring interruptor temperatura
	I	Tenuta termostato
	E	Tórica interruptor de temp.
	NL	'O'Ring temperatuurschakelaar
	D	O–Ring, Temperaturschalter
	DK	'O'ring termostat
	S	O–ring, temperaturvakt
	N	'O'Ring, temperaturvakt
	SF	0–rengas, lämpökytkin
5	**1**	**49808447**
	GB	Gasket, exhaust
	F	Joint, tubulure d'échappement
	P	Junta, colector escape
	I	Guarnizione, scarico collettore
	E	Junta colector de escape
	NL	Uitlaatpakking
	D	Dichtung, Auspuffkrümmer
	DK	Pakning, udstødningsmanifold
	S	Grenrörspackning
	N	Pakning, eksosmanifold
	SF	Tiiviste, pakosarja
6	**1**	**88080767**
	GB	Gasket, oil filler cap
	F	Joint
	P	Junta
	I	Guarnizione
	E	Junta
	NL	Pakking
	D	Dichtung
	DK	Pakning
	S	Packning
	N	Pakning
	SF	Tiiviste

7	**5**	**88082607**
	GB	Gasket, fuel filter tubes
	F	Joint
	P	Junta
	I	Guarnizione
	E	Junta
	NL	Pakking
	D	Dichtung
	DK	Pakning
	S	Packning
	N	Pakning
	SF	Tiiviste
8	**2**	**92788926**
	GB	Seal
	F	Joint
	P	Junta
	I	Tenuta
	E	Sello
	NL	Keerring
	D	Dichtung
	DK	Tætning
	S	Tätning
	N	Tetning
	SF	Tiiviste
9	**1**	**92877620**
	GB	‘O’ Ring, drop tube adaptor
	F	Joint torique
	P	‘O’ ring
	I	Tenuta
	E	Junta tórica
	NL	‘O’Ring
	D	O–Ring
	DK	O–Ring
	S	O–Ring
	N	O–Ring
	SF	O–rengas
10	**1**	**93472272**
	GB	Seal
	F	Joint
	P	Junta
	I	Tenuta
	E	Sello
	NL	Keerring
	D	Dichtung
	DK	Tætning
	S	Tätning
	N	Tetning
	SF	Tiiviste
11	**1**	**95022331**
	GB	’O’ Ring, driveshaft seal cover
	F	Joint torique, couvercle du joint d’arbre de transmission
	P	‘O’ ring tampa veio motor
	I	Tenuta , coperchio paraolio albero trasmissione
	E	Tórica de la tapa del sello del eje motor
	NL	‘O’Ring van aandrijf keering deksel
	D	O–Ring, Abdeckung für Antriebswellendichtung
	DK	‘O’ring, drivaksel tætningsdæksel
	S	O–ring, drivaxeltätn.lock
	N	’O‘Ring, pakningshus – drivaksel
	SF	O–rengas, vetoakselin tiivisten suojus
12	**1**	**95023107**
	GB	’O’ Ring, unloader
	F	Joint torique, vanne d’aspiration
	P	’O’ ring descarregador
	I	Tenuta scarico
	E	Tórica del volumétrico
	NL	‘O’Ring afblaas
	D	O–Ring, Entlastungsventil
	DK	‘O’ring, regulator
	S	O–ring, avlastare
	N	‘O’Ring, avlastningsventil
	SF	O–rengas, purkausventtiili
13	**1**	**95023115**
	GB	’O’ Ring, rear bearing cover
	F	Joint torique, couvercle du palier arrière
	P	’O’ ring tampa rolamento trás
	I	Tenuta , coperchio cuscinetto posteriore
	E	Tórica de la tapa del rodamiento trasero
	NL	‘O’Ring achter lagerdeksel
	D	O–Ring, Rücklagerabdeckung
	DK	‘O’ring, bageste lejedæksel
	S	O–ring, bakre lagerlock
	N	O’Ring, bakre lagerhus
	SF	O–rengas, takalaakerikansi
1 –21	**1**	**49840853**
	GB	Kit, gasket/’O’ Ring (Engine – 7/31)
	F	KIT – Joint/Joint torique (7/31)
	P	Kit – Juntas/’O’Ring (7/31)
	I	Kit – Guarnizioni/O–Ring (7/31)
	E	Kit de Juntas/Tóricas (7/31)
	NL	Kit – Pakking/‘O’Ring (7/31)
	D	Dichtungs / O–Ring–Satz (7/31)
	DK	Paknings– og O–Rings sæt (7/31)
	S	Packnings–/O–Ringsats (7/31)
	N	Pakningsett (7/31)
	SF	Sarja, tiiviste/O–rengas (7/31)
1	**2**	**49807019**
	GB	Gasket, timing case lever
	F	Joint
	P	Junta
	I	Guarnizione
	E	Junta
	NL	Pakking
	D	Dichtung
	DK	Pakning
	S	Packning
	N	Pakning
	SF	Tiiviste
2	**1**	**49807027**
	GB	Gasket, oil pump filter
	F	Joint
	P	Junta
	I	Guarnizione
	E	Junta
	NL	Pakking
	D	Dichtung
	DK	Pakning
	S	Packning
	N	Pakning
	SF	Tiiviste
3	**2**	**49708126**
	GB	Gasket, plug
	F	Joint
	P	Junta
	I	Guarnizione
	E	Junta
	NL	Pakking
	D	Dichtung
	DK	Pakning
	S	Packning
	N	Pakning
	SF	Tiiviste
4	**1**	**49807159**
	GB	Seal, oil crankshaft rear
	F	Joint
	P	Junta
	I	Tenuta
	E	Sello
	NL	Keerring
	D	Dichtung
	DK	Tætning
	S	Tätning
	N	Tetning
	SF	Tiiviste
5	**6**	**49807324**
	GB	Seal, guide
	F	Joint
	P	Junta
	I	Tenuta
	E	Sello
	NL	Keerring
	D	Dichtung
	DK	Tætning
	S	Tätning
	N	Tetning
	SF	Tiiviste
6	**1**	**49808306**
	GB	Gasket, exhaust manifold
	F	Joint, tubulure d’échappement
	P	Junta, colector escape
	I	Guarnizione, scarico collettore
	E	Junta colector de escape
	NL	Uitlaatpakking
	D	Dichtung, Auspuffkrümmer
	DK	Pakning, udstødningsmanifold
	S	Grenrörspackning
	N	Pakning, eksosmanifold
	SF	Tiiviste, pakosarja
7	**1**	**49808702**
	GB	Gasket, timing case cover
	F	Joint
	P	Junta
	I	Guarnizione
	E	Junta
	NL	Pakking
	D	Dichtung
	DK	Pakning
	S	Packning
	N	Pakning
	SF	Tiiviste

8	**1**	**49809338**
	GB	Gasket, oil pump
	F	Joint
	P	Junta
	I	Guarnizione
	E	Junta
	NL	Pakking
	D	Dichtung
	DK	Pakning
	S	Packning
	N	Pakning
	SF	Tiiviste
9	**1**	**49840879**
	GB	Gasket, rocker cover
	F	Joint
	P	Junta
	I	Guarnizione
	E	Junta
	NL	Pakking
	D	Dichtung
	DK	Pakning
	S	Packning
	N	Pakning
	SF	Tiiviste
10	**1**	**49840960**
	GB	Gasket, cylinder head
	F	Joint
	P	Junta
	I	Guarnizione
	E	Junta
	NL	Pakking
	D	Dichtung
	DK	Pakning
	S	Packning
	N	Pakning
	SF	Tiiviste
11	**1**	**49841265**
	GB	Gasket, timing case cover
	F	Joint
	P	Junta
	I	Guarnizione
	E	Junta
	NL	Pakking
	D	Dichtung
	DK	Pakning
	S	Packning
	N	Pakning
	SF	Tiiviste
12	**3**	**49841380**
	GB	Gasket, fuel injection pipe
	F	Joint
	P	Junta
	I	Guarnizione
	E	Junta
	NL	Pakking
	D	Dichtung
	DK	Pakning
	S	Packning
	N	Pakning
	SF	Tiiviste
13	**1**	**54385851**
	GB	Gasket, thermostat cover
	F	Joint
	P	Junta
	I	Guarnizione
	E	Junta
	NL	Pakking
	D	Dichtung
	DK	Pakning
	S	Packning
	N	Pakning
	SF	Tiiviste
14	**3**	**54385935**
	GB	Gasket, injector nozzle
	F	Joint
	P	Junta
	I	Guarnizione
	E	Junta
	NL	Pakking
	D	Dichtung
	DK	Pakning
	S	Packning
	N	Pakning
	SF	Tiiviste
15	**3**	**54385950**
	GB	Gasket, injector nozzle
	F	Joint
	P	Junta
	I	Guarnizione
	E	Junta
	NL	Pakking
	D	Dichtung
	DK	Pakning
	S	Packning
	N	Pakning
	SF	Tiiviste
16	**6**	**54430715**
	GB	Gasket, fuel injection pipe
	F	Joint
	P	Junta
	I	Guarnizione
	E	Junta
	NL	Pakking
	D	Dichtung
	DK	Pakning
	S	Packning
	N	Pakning
	SF	Tiiviste
17	**1**	**88080395**
	GB	Gasket, oil drain plug
	F	Joint
	P	Junta
	I	Guarnizione
	E	Junta
	NL	Pakking
	D	Dichtung
	DK	Pakning
	S	Packning
	N	Pakning
	SF	Tiiviste
18	**1**	**88080510**
	GB	Seal, oil crankshaft front
	F	Joint
	P	Junta
	I	Tenuta
	E	Sello
	NL	Keerring
	D	Dichtung
	DK	Tætning
	S	Tätning
	N	Tetning
	SF	Tiiviste
19	**1**	**88082565**
	GB	Gasket, cylinder head plug
	F	Joint
	P	Junta
	I	Guarnizione
	E	Junta
	NL	Pakking
	D	Dichtung
	DK	Pakning
	S	Packning
	N	Pakning
	SF	Tiiviste
20	**1**	**88082607**
	GB	Gasket, plug
	F	Joint
	P	Junta
	I	Guarnizione
	E	Junta
	NL	Pakking
	D	Dichtung
	DK	Pakning
	S	Packning
	N	Pakning
	SF	Tiiviste
21	**1**	**88082581**
	GB	Gasket, plug flywheel housing
	F	Joint
	P	Junta
	I	Guarnizione
	E	Junta
	NL	Pakking
	D	Dichtung
	DK	Pakning
	S	Packning
	N	Pakning
	SF	Tiiviste
1	**1**	**49840762**
–21	GB	Kit, gasket/'O' Ring (Engine – 7/41)
	F	KIT – Joint/Joint torique (7/41)
	P	Kit – Juntas/'O'Ring (7/41)
	I	Kit – Guarnizioni/O–Ring (7/41)
	E	Kit de Juntas/Tóricas (7/41)
	NL	Kit – Pakking/'O'Ring (7/41)
	D	Dichtungs / O–Ring–Satz (7/41)
	DK	Paknings– og O–Rings sæt (7/41)
	S	Packnings–/O–Ringsats (7/41)
	N	Pakningsett (7/41)
	SF	Sarja, tiiviste/O–rengas (7/41)
1	**2**	**49807019**
	GB	Gasket, timing case lever
	F	Joint
	P	Junta
	I	Guarnizione
	E	Junta
	NL	Pakking
	D	Dichtung
	DK	Pakning
	S	Packning
	N	Pakning
	SF	Tiiviste
2	**1**	**49807027**
	GB	Gasket, oil pump filter
	F	Joint
	P	Junta
	I	Guarnizione
	E	Junta
	NL	Pakking
	D	Dichtung
	DK	Pakning
	S	Packning
	N	Pakning
	SF	Tiiviste

3	**2**	**49807126**
	GB	Gasket, plug
	F	Joint
	P	Junta
	I	Guarnizione
	E	Junta
	NL	Pakking
	D	Dichtung
	DK	Pakning
	S	Packning
	N	Pakning
	SF	Tiiviste
4	**1**	**49807159**
	GB	Seal, oil crankshaft rear
	F	Joint
	P	Junta
	I	Tenuta
	E	Sello
	NL	Keerring
	D	Dichtung
	DK	Tætning
	S	Tätning
	N	Tetning
	SF	Tiiviste
5	**8**	**49807324**
	GB	Seal, guide
	F	Joint
	P	Junta
	I	Tenuta
	E	Sello
	NL	Keerring
	D	Dichtung
	DK	Tætning
	S	Tätning
	N	Tetning
	SF	Tiiviste
6	**1**	**49808702**
	GB	Gasket, timing case cover
	F	Joint
	P	Junta
	I	Guarnizione
	E	Junta
	NL	Pakking
	D	Dichtung
	DK	Pakning
	S	Packning
	N	Pakning
	SF	Tiiviste
7	**1**	**49809338**
	GB	Gasket, oil pump
	F	Joint
	P	Junta
	I	Guarnizione
	E	Junta
	NL	Pakking
	D	Dichtung
	DK	Pakning
	S	Packning
	N	Pakning
	SF	Tiiviste
8	**1**	**49841067**
	GB	Gasket, exhaust manifold
	F	Joint, tubulure d'échappement
	P	Junta, colector escape
	I	Guarnizione, scarico collettore
	E	Junta colector de escape
	NL	Uitlaatpakking
	D	Dichtung, Auspuffkrümmer
	DK	Pakning, udstødningsmanifold
	S	Grenrörspackning
	N	Pakning, eksosmanifold
	SF	Tiiviste, pakosarja
9	**1**	**49841182**
	GB	Gasket, rocker cover
	F	Joint
	P	Junta
	I	Guarnizione
	E	Junta
	NL	Pakking
	D	Dichtung
	DK	Pakning
	S	Packning
	N	Pakning
	SF	Tiiviste
10	**1**	**49841265**
	GB	Gasket, timing case cover
	F	Joint
	P	Junta
	I	Guarnizione
	E	Junta
	NL	Pakking
	D	Dichtung
	DK	Pakning
	S	Packning
	N	Pakning
	SF	Tiiviste
11	**4**	**49841380**
	GB	Gasket, fuel injection pipe
	F	Joint
	P	Junta
	I	Guarnizione
	E	Junta
	NL	Pakking
	D	Dichtung
	DK	Pakning
	S	Packning
	N	Pakning
	SF	Tiiviste
12	**1**	**49841422**
	GB	Gasket, cylinder head
	F	Joint
	P	Junta
	I	Guarnizione
	E	Junta
	NL	Pakking
	D	Dichtung
	DK	Pakning
	S	Packning
	N	Pakning
	SF	Tiiviste
13	**1**	**54385851**
	GB	Gasket, thermostat cover
	F	Joint
	P	Junta
	I	Guarnizione
	E	Junta
	NL	Pakking
	D	Dichtung
	DK	Pakning
	S	Packning
	N	Pakning
	SF	Tiiviste
14	**4**	**54385935**
	GB	Gasket, injector nozzle
	F	Joint
	P	Junta
	I	Guarnizione
	E	Junta
	NL	Pakking
	D	Dichtung
	DK	Pakning
	S	Packning
	N	Pakning
	SF	Tiiviste
15	**4**	**54385950**
	GB	Gasket, injector nozzle
	F	Joint
	P	Junta
	I	Guarnizione
	E	Junta
	NL	Pakking
	D	Dichtung
	DK	Pakning
	S	Packning
	N	Pakning
	SF	Tiiviste
16	**8**	**54537063**
	GB	Gasket, fuel injection pipe
	F	Joint
	P	Junta
	I	Guarnizione
	E	Junta
	NL	Pakking
	D	Dichtung
	DK	Pakning
	S	Packning
	N	Pakning
	SF	Tiiviste
17	**1**	**88080395**
	GB	Gasket, oil drain plug
	F	Joint
	P	Junta
	I	Guarnizione
	E	Junta
	NL	Pakking
	D	Dichtung
	DK	Pakning
	S	Packning
	N	Pakning
	SF	Tiiviste
18	**1**	**88080510**
	GB	Seal, oil crankshaft front
	F	Joint
	P	Junta
	I	Tenuta
	E	Sello
	NL	Keerring
	D	Dichtung
	DK	Tætning
	S	Tätning
	N	Tetning
	SF	Tiiviste
19	**1**	**88082565**
	GB	Gasket, cylinder head plug
	F	Joint
	P	Junta
	I	Guarnizione
	E	Junta
	NL	Pakking
	D	Dichtung
	DK	Pakning
	S	Packning
	N	Pakning
	SF	Tiiviste

20	**1**	**88082581**
	GB	Gasket, plug flywheel housing
	F	Joint
	P	Junta
	I	Guarnizione
	E	Junta
	NL	Pakking
	D	Dichtung
	DK	Pakning
	S	Packning
	N	Pakning
	SF	Tiiviste

21	**1**	**88082607**
	GB	Gasket, plug
	F	Joint
	P	Junta
	I	Guarnizione
	E	Junta
	NL	Pakking
	D	Dichtung
	DK	Pakning
	S	Packning
	N	Pakning
	SF	Tiiviste

	89292973
	20l
GB	Pro–Tec™ compressor fluid
F	Liquide compresseur Pro–Tec™
P	Fluido de compressor Pro–Tec ™
I	Pro–Tec™ – fluido compressore
E	Líquido de compresor Pro–Tec™
NL	Pro–Tec™ compressorvloeistof
D	Pro–Tec™ Kompressoröl
DK	Pro–Tec™ – kompressorvæske
S	Pro–Tec™ kompressorvätska
N	Pro–Tec™ kompressorolje
SF	Pro–Tec™ kompressorineste

	89292981
	208l
GB	Pro–Tec™ compressor fluid
F	Liquide compresseur Pro–Tec™
P	Fluido de compressor Pro–Tec ™
I	Pro–Tec™ – fluido compressore
E	Líquido de compresor Pro–Tec™
NL	Pro–Tec™ compressorvloeistof
D	Pro–Tec™ Kompressoröl
DK	Pro–Tec™ – kompressorvæske
S	Pro–Tec™ kompressorvätska
N	Pro–Tec™ kompressorolje
SF	Pro–Tec™ kompressorineste

	89311716
	20l
	15W/40
GB	Pro–Tec™ engine oil
F	Huile moteur Pro–Tec™
P	Óleo de motor Pro–Tec ™
I	Pro–Tec™ – olio motore
E	Aceite de motor Pro–Tec™
NL	Pro–Tec™ motorolie
D	Pro–Tec™ Motoröl
DK	Pro–Tec™ – motorolie
S	Pro–Tec™ motorolja
N	Pro–Tec™ motorolje
SF	Pro–Tec™ moottoriöljy

	89311724
	208l
	15W/40
GB	Pro–Tec™ engine oil
F	Huile moteur Pro–Tec™
P	Óleo de motor Pro–Tec ™
I	Pro–Tec™ – olio motore
E	Aceite de motor Pro–Tec™
NL	Pro–Tec™ motorolie
D	Pro–Tec™ Motoröl
DK	Pro–Tec™ – motorolie
S	Pro–Tec™ motorolja
N	Pro–Tec™ motorolje
SF	Pro–Tec™ moottoriöljy

Language	Translation
GB	* Not illustrated
F	* Non illustré
P	* Não ilustrado
I	* Non illustrato
E	* No dibujado
NL	* Niet geïllustreerd
D	* Nicht abgebildet
DK	* Ikke illustreret
S	* Ej visat
N	* Ikke illustrert
SF	* Ei kuvaa
GB	† Option
F	† Option
P	† Opções
I	† Opzionale
E	† Opcion
NL	† Extra
D	† Sonder ausstattung
DK	† Tilbehør
S	† Tillval
N	† Ekstrautstyr
SF	† Lisävaruste
GB	Adaptor
F	Adapteur
P	Adaptador
I	Adattatore
E	Adaptador
NL	Adapter
D	Anschlußnippel
DK	Adapter
S	Anslutning
N	Overgang
SF	Liitin
GB	Bolt
F	Boulon
P	Parafuso
I	Bullone
E	Tornillo
NL	Bout
D	Bolzen
DK	Bolt
S	Bult
N	Bolt
SF	Pultti
GB	Box, electrical socket
F	Boîtier, fiche électrique
P	Caixa, terminal
I	Presa (di corrente)
E	Caja, enchufes eléctricos
NL	Kontaktdoos
D	Steckdosekasten
DK	Stikdåse
S	Strömuttag
N	Holder
SF	Pistorasia
GB	Cable, earth
F	Cable de terre
P	Cabo de terra
I	Conduttore di terra
E	Cable tierra
NL	Aardingskabel
D	Erdungskabel
DK	Jordkabel
S	Jordkabel
N	Jordkabel
SF	Kaapeli, maatto–

Language	Translation
GB	Capscrew Socket Head
F	Boulon à tête
P	Parafuso sextavado interior
I	Tappo filettato
E	Tornillo de caperuza
NL	Imbusbout
D	Innensechskantschraube
DK	Sætskrue
S	Insexskruv
N	Unbrakoskrue
SF	Kantaruuvi, uppokantainen
GB	Contactor
F	Contacteur
P	Contactor
I	Contattore
E	Contactor
NL	Schakelaar
D	Schütz
DK	Kontaktor
S	Kontaktor
N	Kontaktor
SF	Kontaktori
GB	Circuit breaker
F	Sectionneur
P	Corta–circuitos
I	Interruttore circuito
E	Interruptor
NL	Schakelaar
D	Electrische Sickerung Unterbrecker
DK	Afbryderkontakt
S	Strömbrytare
N	Kretsbryter
SF	Virrankatkaisin
GB	Connector
F	Connecteur
P	Ligador
I	Connettore
E	Conector
NL	Koppelstuk
D	Doppelnippel
DK	Forbindelsesnippel
S	Anslutning
N	Ansats
SF	liitin
GB	Decal GB,D,F
F	Décalque GB,D,F
P	Autocolante GB,D,F
I	Targhetta GB,D,F
E	Etiqueta GB,D,F
NL	Sticker GB,D,F
D	Aufkleber GB,D,F
DK	Decal GB,D,F
S	Dekal GB,D,F
N	Merke GB,D,F
SF	Sirtokuva GB,D,F

Language	Translation
GB	Diode assembly
F	Diode
P	Diodo
I	Diodo
E	Diodo
NL	Diode
D	Diode
DK	Diode
S	Diod
N	Diode
SF	Diodi
GB	Earth leakage module
F	Module de fuite à la terre
P	Módulo de ligação à massa
I	Presa di tera in esercizio
E	Módulo de fuga a tierra
NL	Aard lek modul
D	Erdschlußmodul
DK	Jordafledningsmodul
S	Jordfelsmodul
N	Jordlekkasjemodul
SF	Maavuotomoduuli
GB	Earth spike
F	Fiche de mise à la terre
P	Espigão de terra
I	Perno di massa
E	Clavija de puesta a tierra
NL	Aardingsstaaf
D	Erdungsspieß
DK	Jordspyd
S	Jordledartapp
N	Jordingspiss
SF	Maadoituspiikki
GB	Elbow
F	Coude
P	Joelho
I	Gomito
E	Codo
NL	Bochtstuk
D	Krümmer
DK	Vinkel
S	Rörkrök
N	Albue
SF	Mutka
GB	Fuse
F	Fusible
P	Fusível
I	Fusibili
E	Fusibile
NL	Zekering
D	Sicherung
DK	Sikring
S	Säkring
N	Sikring
SF	Varoke

GLOSSARY OF NON–ILLUSTRATED ITEMS

GB	Fuse, holder
F	Logement de fusible
P	Porta–fusível
I	Fusibile, contenitore
E	Fusible, portafusible
NL	Zekeringhouder
D	Sicherung, Halter
DK	Sikring, holder
S	Säkring, hållare
N	Sikringholder
SF	Varokkeenpidin

GB	Harness
F	Harnais
P	Cablagem
I	Cablaggio
E	Mazo de cables
NL	Kabelboom
D	Kabelbaum
DK	Ledningsnet
S	Kabelhärva
N	Ledningsnett
SF	Johdinsarja

GB	Harness, alternator
F	Harnais, alternateur
P	Cablagem, alternador
I	Cablaggio, altanatore
E	Mazo de cables, alternador
NL	Kabelboom, dynamo
D	Kabelbaum Drehstromlichtmaschine
DK	Ledningsnet, generator
S	Kabelhärva, generator
N	Ledningsnett, vekselstrømsgenerator
SF	Johdinsar, laturi

GB	Harness, generator control panel
F	Harnais, tableau de commande du générateur
P	Arnês, painel de comando do gerador
I	Fascio di cablaggio, pannello di comando del generatore
E	Mazo de cables, panel de control del generador
NL	Kabelboom, generator bedieningspaneel
D	Kabelsatz, Generator Steuertafel
DK	Ledningsnet, generators instrumentpanel
S	Kabelhärva, generatorns styrpanel
N	Ledningnett, generatorens kontrollpanel
SF	Generaattorin hallintataulun johdinsarja

GB	Holder
F	Porte
P	Suporte
I	Staffa
E	Soporte
NL	Houder
D	Halter
DK	Holder
S	Hållare
N	Holder
SF	Pidin

GB	Key
F	Clef
P	Chave
I	Chiave
E	Llave
NL	Spie
D	Schlüssel
DK	Not
S	Kil för remskiva, skruvpaket
N	Kile skrue – reimhjul
SF	Selitys

GB	Kit, earth spike
F	Kit de fiche de mise à la terre
P	Jogo de ligação do espigão de terra
I	Kit, perno di massa
E	Juego de clavija de puesta a tierra
NL	Pakket, aardingsstaaf
D	Bausatz, Erdungsspieß
DK	Jordspydsæt
S	Jordledningssats
N	Jordingsspiss–sett
SF	Maadoituspiikkisarja

GB	**KIT – INTERNAL DECALS**
F	**KIT – DÉCALCOMANIES INTERNES**
P	**KIT – AUTOCOLANTES INTERIORES**
I	**KIT – SERIE DI TARGHETTE INTERNE**
E	**KIT – CALCOMANÍAS INTERNAS**
NL	**KIT – STICKERS BINNENKANT**
D	**SATZ INNERE AUFKLEBER**
DK	**MONTERINGSSÆT – INDVENDIGE DECALER**
S	**SATS INVÄNDIGA DEKALER**
N	**SETT – MERKER INNVENDIGE**
SF	**SARJA – SISÄISET TARRAT**

GB	Lamp, stop/tail LH
F	Lampe, feu stop/arrière LH
P	Luz, stop/retaguarda LH
I	Spia luminosa, stop, coda LH
E	Luz, parada/trasera LH
NL	Gloeilamp, stop–/achterlicht LH
D	Lampe, Stopp/Melden LH
DK	Lampe, stop/bag LH
S	Lampa, stopp/fel LH
N	Bremse/baklys LH
SF	Lamppu, jarru–/takavalo LH

GB	Lamp, stop/tail RH
F	Lampe, feu stop/arrière RH
P	Luz, stop/retaguarda RH
I	Spia luminosa, stop, coda RH
E	Luz, parada/trasera RH
NL	Gloeilamp, stop–/achterlicht RH
D	Lampe, Stopp/Melden RH
DK	Lampe, stop/bag RH
S	Lampa, stopp/fel RH
N	Bremse/baklys RH
SF	Lamppu, jarru–/takavalo RH

GB	Lipseal, driveshaft
F	Joint à lèvres, arbre de transmission
P	Retentor veio motor
I	Paraolio, albero
E	Sello labiado del eje motríz
NL	Keerring aandrijfas
D	Lippendichtung, Antriebswelle
DK	Kanttætning, drivaksel
S	Läpptätning, drivaxel
N	Tetningsring – drivaksel
SF	Huulitiiviste, vetoakselin

GB	Lock
F	Serrure
P	Fecho
I	Serratura
E	Cerradura
NL	Slot
D	Schloß
DK	Lås
S	Lås
N	Lås
SF	Lukko

GB	Locknut
F	Ecrou
P	Porca de freio
I	Controdado
E	Tuerca de seguridad
NL	Borgmoer
D	Sicherungsmutter
DK	Låsemørtrik
S	Låsmutter
N	Låsemutter
SF	Lukkomutteri

GB	Lockwasher
F	Rondelle d'arrêt
P	Anilha de aperto
I	Rosetta di sicurezza
E	Arandela de presión
NL	Borgring
D	Sicherungsscheibe
DK	Låseskive
S	Låsbricka
N	Låseskive
SF	Lukkoaluslevy

GB	Manual, Operation and Maintenance, with parts catalogue
F	Manuel d'utilisation et de pièces détachèes d'entretien, avec catalogue
P	Manual de operação e manutenção, com lista de peças
I	Libro d'uso e manutenzione, con lista ricambi
E	Manual de manejo y mantenimiento, con lista de repuestos
NL	Bedienings– en onderhoudshandboek, onderdelenkatalogus
D	Betriebs– und Wartungshandbuch mit Ersatzteilliste
DK	Drifts–og vedligeholdelsesmanual, med reservedelsliste
S	Drifts– och underhållsinstruktion med reservdelslista
N	Instruksjonsbok, med delekatalog
SF	Ohjekirja, käyttö ja huolto sekä varaosaluettelo

GB	Manual, Operation and Maintenance
F	Manuel d'utilisation et d'entretien
P	Manual de operação e manutenção
I	Libro d'uso e manutenzione
E	Manual de manejo y mantenimiento
NL	Bedienings– en onderhoudshandboek
D	Betriebsanleitung und Ersatzteilliste
DK	Drifts–og vedligeholdelsesmanual
S	Drifts– och underhållsinstruktion
N	Instruksjonsbok
SF	Ohjekirja, käyttö ja huolto

GB	Manual, Parts catalogue
F	Catalogue de pièces déta-chèes
P	Lista de peças
I	Lista ricambi
E	Lista de repuestos
NL	Onderdelenkatalogus
D	Teile– Liste
DK	Reservedelsliste
S	Reservdelslista
N	Delekatalog
SF	Ohjekirja, varaosaluettelo

GB	Nipple
F	Mamelon
P	Casquilho
I	Nipplo
E	Manguito
NL	Nippel
D	Nippel
DK	Nippel
S	Nippel
N	Nippel
SF	Nippa

GB	Nut
F	Ecrou
P	Porca
I	Dado
E	Tuerca
NL	Moer
D	Mutter
DK	Møtrik
S	Mutter
N	Mutter
SF	Mutteri

GB	'O' Ring
F	Joint torique
P	'O' ring
I	Tenuta
E	Junta tórica
NL	'O'Ring
D	O–Ring
DK	O–Ring
S	O–Ring
N	O–Ring
SF	0–rengas

GB	Plug
F	Bouchon
P	Tomada
I	Tappo
E	Tapón
NL	Plug
D	Stecker
DK	Prop
S	Plugg
N	Plugg
SF	Pistoke

GB	Relay
F	Relais
P	Relé
I	Relé
E	Relé
NL	Relais
D	Relais
DK	Relæ
S	Relä
N	Rele
SF	Rele

GB	Resistor
F	Résistance
P	Resistencia
I	Resistenza
E	Resistencia
NL	Weerstand
D	Widerstand
DK	Modstand
S	Motstånd
N	Motstand
SF	Vastus

GB	Resistor, heatsink
F	Résistances, dissipateur de chaleur
P	Resistência eléctrica, amortecedor de calor
I	Resistenza, dissipatore di calore
E	Resistor, absorbedor del calor
NL	Weerstand, warmteafleiderq
D	Widerstand, Wärmesenke
DK	Modstand, varmeafleder
S	Motstånd, kyldon
N	Motstand, varmebortleder
SF	Jäähdytyslevyn vastus

GB	Rivet
F	Rivet
P	Rebite
I	Rivetto
E	Remache
NL	Klinknagel
D	Niet
DK	Nitte
S	Nit
N	Nagle
SF	Niitti

GB	Screw
F	Vis
P	Parafuso
I	Vite
E	Tornillo
NL	Schroef
D	Schraube
DK	Skrue
S	Skruv
N	Skrue
SF	Ruuvi

GB	Screw, self tapping
F	Vis autotaraudeuse
P	Parafuso auto–roscante
I	Vite autofilettante
E	Tornillo, autorroscante
NL	Schroef, zelftapper
D	Blechschraube
DK	Galopskrue
S	Skruv, självgängande
N	Treskrue
SF	Itsekierteittävä ruuvi

GLOSSARY OF NON–ILLUSTRATED ITEMS

GB	Setscrew
F	Vis
P	Parafusos
I	Vite
E	Tornillo
NL	Instelschroef
D	Stellschraube
DK	Sætskrue
S	Ställskruv
N	Pinneskrue
SF	Asetusruuvi

GB	Socket, electrical outlet
F	Prise de sortie électrique
P	Tomada, saída de corrente
I	Presa, uscita elettricità
E	Enchufe, toma eléctrica
NL	Contactdoos
D	Elektrische Steckdose
DK	Stik, elektrisk udtag
S	Eluttag
N	Elektrisk kontakt
SF	Pistorasia

GB	Spacer
F	Entretoise
P	Espassador
I	Distanziatore
E	Separador
NL	Vulring
D	Abstandsstück
DK	Afstandsskive
S	Distansring
N	Distansering
SF	Välike

GB	Strap
F	Courroie
P	Fita
I	Cinghia
E	Correa
NL	Riem
D	Riemen
DK	Strop
S	Rem
N	Stropp
SF	Hihna

GB	Switch, auxilliary contact MCB
F	Commutateurs, contact auxiliaire MCB
P	Interruptor, contacto auxiliar MCB
I	Interruttore, contatti ausiliari interruttore automatico miniatura (MCB)
E	Interruptor. contacto auxiliar MCB
NL	Schakelaar, automaat (MCB) hulpcontact
D	Schalter, Hilfskontact–MCB (Leistungsschutzschalter)
DK	Afbryder, hjælpekontakt MCB
S	Brytare, reservkontakt minikretsbrytare
N	Bryteer, ekstrakontakt MCB
SF	Lisäkosketuskytkin (pienoiskatkaisija – MCB)

GB	Switch, contact
F	Commutateur, contact
P	Interruptor, contacto
I	Interruttore, contatti
E	Interruptor, contacto
NL	Schakelaar, contact
D	Kontaktschalter
DK	Afbryder, kontakt
S	Brytare, kontakt Bryter,
N	kontakt
SF	Kosketuskytkin

GB	Switch, test push button (Grey)
F	Commutateurs, bouton–poussoir d'essai (gris)
P	Interruptor, botoneira de teste (Cinzento)
I	Interruttore, pulsante di prova (grigio)
E	Interruptor, botón pulsador de pruebas
NL	Schakelaar, testknop (grijs)
D	Schalter, Prüftaster (grau)
DK	Afbryder, prøvetrykknap (Grå)
S	Brytare, testknapp (grå)
N	Bryter, test–trykknapp (grå)
SF	Testauspainokytkin (harmaa)

GB	Tee
F	Té
P	Tê
I	Raccordo a T
E	Te
NL	T–stuk
D	T–Stück
DK	Tee
S	T–rör
N	T–stykke
SF	T–kappale

GB	Terminal, contact block
F	Borne, block de contact (plot)
P	Terminal, bloco de contacto
I	Terminale, blocco contatti
E	Terminal, bloque de contactos
NL	Klem, klemmenstrook
D	Klemme, Kontaktblock
DK	Terminal, kontaktblok
S	Klämma, kontaktblock
N	Terminal, kontaktblokk
SF	Pääteliitin, liityntälohko

GB	Terminal, end stop
F	Borne, embout arrêtoir
P	Terminal, paragem final
I	Terminale, fermo d'estremità
E	Terminal, parada final
NL	Klem, eindaanslag
D	Klemme, Endanschlag
DK	Terminal, endestop
S	Klämma, ändstopp
N	Terminal, endestopp
SF	Pääteliitin, päätyrajoitin

GB	Stud
F	Vis de tour
P	Perno
I	Perno
E	Esparrago
NL	Tapeind
D	Bolzen
DK	Tap
S	Sprint
N	Skive
SF	Vaarna

GB	Washer
F	Rondelle
P	Anilha
I	Rondella
E	Arandela
NL	Ring
D	Unterlegscheibe
DK	Skive
S	Bricka
N	Skive
SF	Aluslevy

Code	Description	CCN
AV	Bolt M12 x 65	92148014
CB	Bolt 5/8” UNC x 1”	95664314
ED	Capscrew Socket Head M10 x 60	35299353
EM	Capscrew Socket Head M8 x 20	92421403
FH	Capscrew Socket Head M5 x 15	92421429
FO	Capscrew Socket Head M10 x 100	92794502
FQ	Capscrew Socket Head M8 X 50	92475276
GO	Locknut M8	92304559
GQ	Locknut M16	92311695
HA	Locknut 1/2”	95081824
HO	Lockwasher M12	92304682
HX	Lockwasher M4	92340447
HZ	Lockwasher M5	92304641
IA	Lockwasher M6	92304658
IB	Lockwasher M8	92061324
ID	Lockwasher M8	92304666
II	Lockwasher M10	92304674
IU	Screw M8 x 30	92708999
JR	Nut M12	90103854
KD	Nut M8	92304518
KR	Nut M10	92304567
LD	Nut M10	92473594
LG	Nut M8	92398114
LM	Nut M6	92304542
LO	Nut 1/2” UNC	95077798
MA	Rivet 3/16” x 5/8”	92271923
MQ	Screw M8 x 50	92472109
NU	Screw, self tapping M6 x 15	92441450
OA	Screw M6 x 12	92368687

Code	Description	CCN
OG	Screw M10 x 25	92473586
OH	Screw M10 x 30	92182138
OM	Screw M6 x 12	92184811
ON	Screw M6 x 16	92096015
OO	Screw M6 x 20	92398122
OP	Screw M6 x 25	92179043
OQ	Screw M8 x 20	92398130
OR	Screw M8 x 25	92101112
OT	Screw M6 x 12	92722990
QZ	Setscrew M10 x 25	92304401
RA	Setscrew M10 x 30	92280981
RF	Setscrew M12 x 30	90103185
RI	Setscrew M12 x 50	92304450
SG	Setscrew M6 x 20	92304484
SL	Setscrew M8 x 16	92304336
SN	Setscrew M8 x 25	90141078
SW	Setscrew M4 x 16	92050376
SY	Screw M5 x 20	92340058
TI	Screw M16 x 50	92398239
UB	Setscrew M4 x 40	92861442
UH	Setscrew M6 x 40	92476019
VP	Washer M10	92061498
VR	Washer M10	92329283
VT	Washer M12	92061506
WC	Washer M4	92340439
WG	Washer M6	92341981
WH	Washer M8	92061480
WI	Washer M8	92304609
WX	Washer 17 ID X 25 OD	35294339
XE	Washer 1/4”	95094298

Code	Description	CCN
XR	Washer M16	92757632
ZV	Stud M8 x 30	92961499

D4	Capscrew Socket Head M10 x 30	89298566
E5	Washer	49807969
E7	Washer	49807431
E8	Bolt	88081203
E9	Washer	88082466
F2	Bolt M6 X 20 Flange	49840663
F3	Bolt M8 X 25	49807878
F4	Bolt M12 X 89	49808280
F5	Bolt M8 X 16 Flange	49806797
F7	Bolt M6 X 14 Flange	49806748
F8	Bolt M10 – 1.5 X 20	49806896
F9	Bolt M6 X 13 W/WASHER	49809650
G2	Bolt M8 X 45 FLANGE	49806870
G3	Bolt M6 X 25 FLANGE	49806763
G5	Bolt	49807423
G6	Bolt	49807761
H3	Bolt M8 X 60 FLANGE	49806888
H4	Bolt M8 X 40 FLANGE	49806805
H5	Bolt M8 X 70 FLANGE	49806839
H6	Bolt M8 X 45 FLANGE	49806813
H7	Bolt M8 X 20 FLANGE	88080049
H8	Bolt M6 X 12	49806722
J3	Stud M8 X 1.25	49809973
J4	Stud M8 X 36	49809957
J7	Bolt	49840820
J8	Nut	49840838
J9	Nut	49840721
K2	Bolt M10 X 30 FLANGE	49806854
K3	Bolt M10 X 20 FLANGE	49806896
K4	Bolt M6 X 12 FLANGE	88080023

FASTENERS INDEX

Code	Description	CCN
K5	Bolt M8 X 30 FLANGE	88080064
K6	Bolt M6 X 30 FLANGE	49806771
K7	Bolt M6 X 50 FLANGE	49806789
K9	Bolt M10 x 70	49806862
L3	Nut	49806946
L4	Nut	49809668
L5	Nut	49807118
L6	Nut	49849086
L8	Nut	88080312
M3	Nut M8	88082383
M5	Nut	88080320
M6	Nut	49849078
M7	Nut	49807100
M8	Nut	88082367
M9	Nut	49807381
N3	Nut	49849060
P3	Washer	49807134
P4	Washer	49849094
P5	Washer	49849102

Code	Description	CCN
P6	Washer	88082433
Q3	Screw	49807886
Q4	Screw M4 – 0.7 X 10	49809924
Q5	Screw	49808389
Q6	Screw	49807902
Q7	Screw	49807696
S2	Bolt M6 – 1.0 x 16	49809635
S3	Bolt M6 x 22	49809643
S5	Bolt	54530530
S6	Bolt, Eye M14 X 29	88082672
S8	Bolt	49840812
S9	Bolt M8 X 53 Flange	49840846
T2	Stud M8 X 79 L=92	49807092
T3	Stud	49809122
T4	Stud M6 X 16 L=25	49809932
T5	Stud M8 X 52	49809965

Code	Description	CCN
T6	Stud	49806987
T7	Stud M6 X 19 L= 27	49807720
T8	Stud	49807712
U8	Bolt	88080105
U9	Bolt	49840697
V2	Bolt	88081393
V3	Bolt	49840713
W5	Bolt M8 – 1.25 X 80 FLANGE HEAD	48906847
W6	Washer	49841539
W7	Stud	49841489
W8	Bolt M10 – 1.75 X 25 FLANGE HEAD	49840705
Y3	Screw M8 – 1.25 X 80	36884187
Y4	Bolt, Eye	49840853
Y5	Stud	48909932
Z3	Washer	92058429
Z4	Washer	88082433

Tube Fittings Index		CCN
AC	Adaptor	92123215
BH	Connector	35295880
BU	Connector	92104132
BW	Connector	92091990
KH	Tee	54577192

Tube Fittings Index		CCN
LX	Elbow	89249643
MS	‘O’ Ring	92338946
OA	Plug	35579630
OH	Plug	39483888
OZ	Plug	93502128

Tube Fittings Index		CCN
XM	Nipple	92795194
WP	Elbow	54485222
WS	Elbow	54403191
WX	Elbow	35374867

CCN & PAGE

35255553, *54*
35279942, 69
35286491, *8*
35296342, *43*
35300615, *49*, 64, 66
35317379, *8*
35320688, *59*
35322379, *53*, 64, 67
35327691, 64, 67
35355106, *53*, *58*, 64, 67
35363498, *43*
35372986, *8*
35374867, *8*
35375369, *8*, 69
35376334, *8*
35376342, *8*, *54*
35376359, *8*, 69
35379817, *8*
35579523, *59*
35596436, *8*, 64, 67
35611557, *8*
35611615, *8*
35611623, *8*
36007813, *8*
36007847, *8*
36506442, *8*
36508471, *8*
36764553, *8*
36875565, *7*
36878379, 64, 67
36880706, *39*, 67
36897353, *8*, 63, 64, 67
36921690, *50*, 64
39404165, *8*, 69
49708126, 70
49807001, *12*, *26*, *46*
49807019, *26*, *46*, 70, 71
49807027, *24*, *44*, 70, 71
49807043, *27*, *47*
49807126, *26*, *46*, 72
49807142, *13*, *33*
49807159, 28, *33*, 70, 72
49807167, *22*, *42*
49807175, *23*
49807183, *21*, *41*
49807241, *16*, *35*
49807266, *26*, *46*
49807274, *26*, *46*
49807290, *24*, *44*
49807324, *11*, *31*, 70, 72
49807456, *22*
49807589, *13*, *33*
49807597, *17*, *36*
49807605, *12*, *13*, *32*, *33*
49807613, *24*, *44*, 64, 67
49807621, *15*, *30*
49807670, *15*, *30*
49807712, *33*
49807753, *26*, *46*
49807811, *17*, *36*
49807829, 28, *46*
49807845, *26*, *46*
49807910, *26*, *46*
49807928, *26*, *46*
49807936, *26*, *46*
49807944, *27*, *47*
49808009, *11*, *31*
49808017, *18*
49808041, *17*, *36*
49808058, *27*, *47*
49808165, *21*
49808199, *15*, *30*
49808223, *27*, *47*
49808231, *27*, *47*
49808256, *27*, *47*
49808306, *18*, 70
49808322, *26*, *46*
49808348, *13*, *33*
49808355, *15*, *30*
49808363, *26*, *46*
49808447, *18*, *38*, 69
49808488, *34*
49808504, *34*
49808538, 28, *33*
49808546, *24*, *44*
49808579, *27*, *47*
49808595, *12*, *32*
49808603, *13*, *33*
49808611, *24*, *44*
49808637, *26*, *46*
49808645, *16*, *35*
49808702, *26*, *46*, 70, 72
49808975, *27*, *47*
49808983, *27*, *47*
49809031, *11*, *31*
49809049, *11*, *31*
49809114, *27*, *47*
49809338, *24*, *44*, 71, 72
49809379, *22*, *42*
49809387, *17*, *23*, *43*
49809395, *23*
49809403, *23*
49809411, *27*, *47*
49809429, *24*, *44*
49809460, *15*, *30*
49809486, *26*, *46*
49809494, *21*, *41*
49809502, *21*, *41*
49809510, *21*, *41*
49809528, *21*, *41*
49809536, *21*, *41*
49809544, *21*, *41*
49809551, *21*, *41*
49809569, *21*, *41*
49809577, *21*, *41*
49809593, *16*, *35*
49809684, *27*, *47*
49809692, *27*, *47*
49809700, *27*, *47*
49809809, *23*, *43*
49809825, *15*, *30*
49809833, *15*, *30*
49809841, *25*, *45*
49809858, *20*, *40*
49809866, *36*
49809882, *20*, *45*
49809908, *16*, *35*
49809916, *16*, *35*
49809999, *26*, *46*
49840739, *17*
49840747, *36*
49840762, *29*, 67, 71
49840770, *20*
49840788, *17*, *36*
49840796, *17*
49840804, *17*, *36*
49840853, *9*, 64, 70
49840861, *19*, *39*
49840879, *10*, 71
49840887, *11*, *31*
49840895, *11*, *31*
49840903, *24*, *44*
49840911, *15*, *30*
49840929, *17*, *36*
49840937, *15*, *30*
49840945, *15*, *30*
49840960, *11*, 71
49840978, *15*, *30*
49840986, *45*
49840994, *36*
49841000, *47*
49841018, *44*
49841034, *30*
49841067, *38*, 72
49841075, *19*, *39*
49841083, *36*
49841091, *36*
49841109, *36*
49841117, *47*
49841125, *26*, *46*
49841133, *47*
49841141, *41*
49841157, *31*
49841166, *21*, *41*
49841174, *30*
49841182, *30*, 72
49841190, *41*
49841216, *16*, *35*
49841224, *17*, *36*
49841240, *14*
49841257, *26*, *46*
49841265, *26*, *46*, 71, 72
49841273, 28, *46*
49841281, *10*, *30*
49841299, *35*
49841307, *41*
49841315, *21*, *41*, 64, 67
49841323, *21*, *41*, 64, 67
49841331, *21*, *41*
49841349, *16*, *35*
49841356, *31*
49841372, *32*, *33*
49841380, *21*, *41*, 71, 72
49841398, *36*
49841406, *36*
49841414, *11*, *31*
49841422, *31*, 72
49841430, *30*
49841448, *19*, *39*
49841455, *32*
49841463, *37*, *38*
49841471, *40*
49841497, *16*, *35*
49841539, *17*
49841547, *15*
49841554, *27*
49841562, *17*
49841570, *14*
49841588, *24*
49841596, *13*
49841604, *27*
49841612, *17*
49841620, *17*
49841638, *11*
49841646, *15*
49841653, *11*
49841661, *21*
49841687, *17*
49841695, *12*, *13*
49841711, *17*
49841729, *12*
49849003, *15*, *30*
49849011, *27*, *47*
49849029, *13*, *24*, *33*, *44*
49849037, *13*, *33*
49849045, *26*, *46*
49849052, *27*, *47*
49849086, *25*
49849110, *16*, *35*
49849128, *26*, *46*
49849136, *13*, *33*
49849185, *33*
49849193, *16*, *35*
49849219, *10*, *32*, *33*
49849227, *12*, *32*
49849284, *15*, *22*, *30*, *42*
49849318, *12*, *32*
49849557, *36*
54381306, *22*, *42*, 63, 65, 67
54385836, *19*, *39*, 65, 67
54385851, *19*, *39*, 71, 72
54385893, *11*, *31*, 65, 67
54385935, *21*, *41*, 71, 72
54385950, *21*, *41*, 71, 72
54385984, *10*, *30*
54403266, *53*, *58*
54403530, *1*
54403605, *4*
54427083, *1*, *4*
54427133, *52*
54427182, *1*, *4*
54427185, *1*, *4*
54427224, *2*, *5*
54427240, *1*, *4*
54427257, *1*, *4*
54427273, *3*, *6*
54428289, *6*
54429675, *13*, *33*, *63*, 67
54429717, *10*, *30*, 65, 67
54429725, *25*, *45*
54430566, *21*
54430665, *17*
54430707, *13*, *33*, 65, 68
54430715, *21*, 71
54438213, *53*, *58*
54438239, *53*, *58*
54440102, *53*, *58*
54479654, *54*
54492989, *56*
54493085, *53*, *58*, 65, 68
54495700, *8*
54497276, *7*
54505987, *7*
54506027, *7*
54506035, *7*
54508866, *57*
54514310, 2, 4
54514328, 2, 4
54514336, 2, 4
54516075, 63
54517735, *50*
54519665, *8*
54525506, *52*
54525530, 63, 65, 68
54526801, *20*, *40*, 65, 68
54530522, *12*, *32*
54533047, *52*, 65, 68
54537063, *41*, 72
54537303, *54*, 65
54540331, 48
54540349, 48
54540356, 48
54540380, 48
54540398, 48
54540403, *7*
54540406, 48
54540414, 48
54540422, *7*
54540455, *7*
54540505, *7*
54540521, *49*
54540539, *7*
54540547, 51
54540554, 51
54540570, *49*
54540588, *49*
54540596, *49*

CCN & PAGE

54540612, *49*
54540620, *49*
54540646, 50
54540653, 51
54540661, 51, 68
54540711, *50*
54540729, *50*
54540737, 50
54540745, *50*
54540778, *56*
54541768, 56
54542899, 48
54542931, 50
54542949, *52*
54542998, 50
54563317, 48
54564273, 51
54566328, 51
54568415, *7*
54569405, *50*
54570544, *60*
54570585, 62
54570593, 62
54570734, *49*
54570908, *7*
54571906, 68
54571914, 54
54572128, *54*
54572151, *54*
54572557, 48
54572565, 48
54573845, *49*
54575147, *50*
54575154, *1*
54576525, *1*
54576624, *52*
54576632, *49*
54577168, *50*
54577176, 51
54577184, 51
54577267, 51
54577275, 51
54577937, *56*
54580139, 52
54581160, *59*
54581186, *59*
54581939, *59*
54581947, *7*
54582010, *60*, 62
54584511, *60*, *61*, 62
54585062, *60*, 61
54585070, 62

CCN & PAGE

54585096, *60*, 61
54585104, 62
54592126, *7*
54596705, 50, 65, 68
54598701, *54*
54599345, 50
54599352, 50
54601653, *54*
54601901, *52*
54602057, 8
54602065, 8
54605985, *59*
54605993, *59*
54609706, *60*, *61*, 62
54612213, *8*
54612239, *7*
54612247, *48*
54619010, *7*
54619374, *57*
54626486, 56
54626494, 56
54635539, 48
54635547, 48
54637061, *60*, *61*, *62*
54643515, *16*
85448371, 66
85448389, 64
85448397, 65, 68, 69
85448686, 63
85448694, 63
85449015, 56
85449023, 56
88080353, *11*, *31*
88080379, *26*, *33*, *46*
88080387, *37*
88080395, *14*, *34*, 71, 72
88080486, *12*, *13*, *15*, *30*
88080494, *11*, *19*, *31*, *39*
88080510, 28, *46*, 71, 72
88080544, *26*, *46*
88080569, *13*, *33*
88080643, *22*, *42*
88080767, *10*, 28, *30*, *46*, 69
88081757, *20*, *45*
88081906, *11*, *12*, *31*, *32*
88082524, *27*, *47*
88082565, *15*, *30*, 71, 72
88082581, *37*, 71, 73

CCN & PAGE

88082607, *13*, *22*, *33*, *42*, 70, 71, 73
88082656, *14*, *34*, 65, 68
88082664, *12*, *32*
88091889, *59*
88109988, *54*
88111349, *2*
88123153, *60*, *61*
88123229, 59
88125752, *54*
89204572, *61*
89204648, 60, 61
89204721, *49*
89205355, *60*, *61*, *62*
89205371, *60*
89230494, *59*
89230536, *61*
89230551, *62*
89230577, *62*
89230585, *62*
89231005, 62
89231013, *62*
89231021, *61*, *62*
89231138, *59*
89231146, *59*
89231690, *60*
89231708, *61*
89231716, *60*, *61*
89231724, *60*, *61*
89231732, *60*
89231740, *61*, *62*
89231757, *54*
89232151, *60*, *62*
89232169, *61*
89232177, *60*, *61*, *62*
89232474, *49*, 66, 68
89232854, *50*, 68
89235389, *61*, *62*
89235397, *60*, *61*, *62*
89248678, 62
89249577, *62*
89249585, *60*, *61*, *62*
89253991, *53*, *58*
89257067, 48
89257489, 52
89257497, *52*
89260319, *3*, *6*
89260954, *52*
89282867, *54*
89283527, *60*
89284558, *54*, 66, 68
89292973, 73

CCN & PAGE

89292981, 73
89303655, *58*
89303853, *49*
89311716, 73
89311724, 73
90103185, *3*, *6*
92022540, *2*, *5*, *6*
92022763, *1*, *3*, *4*, *5*, *6*
92049543, *6*
92053487, *1*, *4*
92053495, *1*, *4*
92053537, *1*, *6*
92053768, *1*, *4*
92053776, *1*, *4*
92053800, *1*, *4*
92053818, *1*, *4*
92053826, *1*, *4*
92053834, *1*, *4*
92053842, *1*, *4*
92053859, *2*, *5*, *6*
92053883, *3*, *5*
92053974, *1*, *4*
92054006, *2*, 4
92055433, *2*, 4
92055482, *2*
92055516, *3*, *5*
92055557, *3*, *5*
92055581, *3*, *5*
92055623, *3*, *5*
92055631, *3*, *5*
92055649, *3*, *5*
92055656, *3*, *5*
92055680, *1*, *4*
92055698, *1*, *4*
92055706, *1*, *4*
92061506, *3*, *6*
92067982, *57*
92074350, *1*, *4*
92074384, *1*, *4*
92075530, *54*
92076173, *54*, 66, 68
92085729, *48*
92086719, *54*, 66, 68
92094358, *48*
92102540, *1*, *4*
92102557, *2*, *5*
92102565, *2*, *5*
92102573, *2*
92102599, *1*, *4*
92102607, *1*, *4*
92107804, 48
92117696, *49*

CCN & PAGE

92118504, *8*
92118520, *8*
92119445, 48
92119460, 48
92119957, 48
92121243, *48*
92173780, *58*
92178524, *50*
92185016, *57*
92253111, 51
92253137, *3*, *5*
92253194, *55*
92259563, *3*, *6*
92272343, *3*, *5*
92280817, *55*
92290162, *57*
92293661, *53*, *58*
92294461, *50*, 66, 69
92302058, *3*, *5*, *6*
92304518, *1*, *4*, *6*
92304575, *3*, *6*
92304682, *3*, *6*
92306901, *54*, 66
92311224, *49*
92312339, *6*
92321926, *49*
92368687, *3*, *6*
92472638, *57*
92473594, *57*
92490358, *53*, *57*, *58*
92549369, *53*, *58*, 66, 69
92656925, *54*
92661750, 3
92680552, *2*
92680602, *3*, *5*
92680610, *3*, *5*
92680628, *3*
92680636, *3*
92680669, *2*, *4*
92680693, *3*, *5*
92680701, *3*, *5*
92680890, *59*
92687417, *2*
92687433, *1*, *4*
92699412, *59*
92699420, *59*
92699438, *59*
92715051, *53*, *57*, *58*
92719921, *5*
92721331, *48*
92753789, *6*
92754530, *5*

CCN & PAGE

92754548, *5*
92754555, *5*
92754563, *5*
92754571, *6*
92754589, *5*
92754597, *6*
92754605, *6*
92756675, *6*
92756774, *6*
92756782, 6
92756790, 6
92756816, *6*
92756865, *6*
92756907, *5*
92757046, *1*, *4*
92762723, 51
92762756, *53*, *58*, 66, 69
92762962, *1*, *4*
92762970, *1*, *4*
92762988, *1*, *4*
92762996, *1*, *4*
92763002, *1*, *4*
92782762, *4*
92783281, 48
92783810, 48
92788868, 48
92788918, *53*, *58*
92788926, 70
92789080, *8*
92789288, *50*
92789338, *4*
92789734, *54*
92789742, *55*
92790187, *54*, 66, 69
92790633, *8*
92790831, *3*, 6
92792977, 52
92793124, *58*
92793249, *1*
92793272, *1*, *4*
92793405, *1*, *4*
92793413, *1*, *4*
92794254, *48*
92794266, *53*, *58*
92795095, 48
92798719, 48
92798727, 48
92799378, *53*, *58*
92799436, *58*
92799444, *58*
92799485, *52*
92799501, 48

CCN & PAGE	CCN & PAGE	CCN & PAGE	CCN & PAGE	CCN & PAGE	CCN & PAGE
92799519, 48	92848647, *6*, 6	92894609, 48	93151413, *8*	93465417, 48	95023115, *8*, 70
92799840, *54*	92855634, *59*	92896158, *57*	93152593, *58*	93466381, *54*, 66, 69	95064697, *3*, *5*, *6*
92808161, *54*	92856160, *57*	92911288, *57*	93159655, *50*, 66, 69	93472272, *50*, 70	95076774, *2*, 4
92810373, 6	92856707, *60*, *61*, *62*	92919331, *52*	93159804, *54*	93477370, *48*	95076790, *5*
92810381, *6*	92857556, *52*	92919380, *57*	93159812, *54*	93477388, *48*	95077442, *3*, *5*
92814243, *52*	92859560, *60*, *61*, *62*	92919398, *57*	93163897, *57*	93478899, *60*, *61*, *62*	95081857, *3*, *5*
92814276, *56*	92863810, *53*, *58*	92919554, *57*	93174068, *56*	93499929, *56*	95094314, *3*, *5*
92823913, *57*	92869775, *3*, *6*	92919810, *57*	93174118, *60*	93499952, *56*	95252524, *1*, *4*
92823921, *50*	92869783, *3*, *6*	92931401, *53*	93174175, *53*, *58*, 66, 69	95002697, *1*, *4*	95391348, *1*, *4*
92824010, 48	92876887, *60*, *61*, *62*	92951417, *60*, *61*, *62*	93181366, *59*	95022331, 8, 70	
92829308, *60*, *61*, *62*	92877620, *50*, 70	92969914, *54*, 66, 69	93465409, 48	95023107, *8*, 70	

Printed in the United Kingdom