INGERSOLL-RAND

G 16

PARTS MANUAL

17131178

Doosan purchased Bobcat Company from Ingersoll-Rand Company in 2007. Any reference to Ingersoll-Rand Company or use of trademarks, service marks, logos, or other proprietary identifying marks belonging to Ingersoll-Rand Company in this manual is historical or nominative in nature, and is not meant to suggest a current affiliation between Ingersoll-Rand Company and Doosan Company or the products of either.

G 16
EDITION:02/04/2004
Revised (01-13)

33519016101

AFTERMARKET - 50 Hertz Generators

For more information on how to order parts or information regarding your local distributor (Europe, Middle East, Africa) please contact:

Facility Details **Coordonnées du Site** **Unternehmensdetails** **Dirección**	Ingersoll-Rand European Sales Ltd Portable Power Paragon Business Park Chorley New Road, Horwich Bolton BL6 6JN United Kingdom
Telephone **Téléphone** **Telefon** **Teléfono**	+44 (0) 1204 690 690
Fax	+44 (0) 1204 690 366
Emergency order phone **Numéro d'urgence pour commandes** **Dringende Aufträge, Telefon** **Teléfono de pedidos de urgencia**	+44 (0) 777 6170921
Office hours **Heures d'ouverture** **Bürostunden** **Horas de oficina**	Mon-Fri 8:00am to 4:30pm (GMT)

Telephone contact directory
Numéros des contacts
Telefonkontaktverzeichnis
Teléfonos de contacto

Harry Dale Aftermarket Marketing Manager	+44 (0) 1204 690 541
Malcolm Stott Marketing Analyst	+44 (0) 1204 690 396
Ian Parr Parts Co-ordinator	+44 (0) 1204 690 465
Howard Connolly Parts Co-ordinator	+44 (0) 1204 690 641
Martin James Parts Co-ordinator MEA	+44 (0) 1204 690 329

Imprimé avec FinePrint 2000 - enregistrer sous http://www.gs2.fr

G016

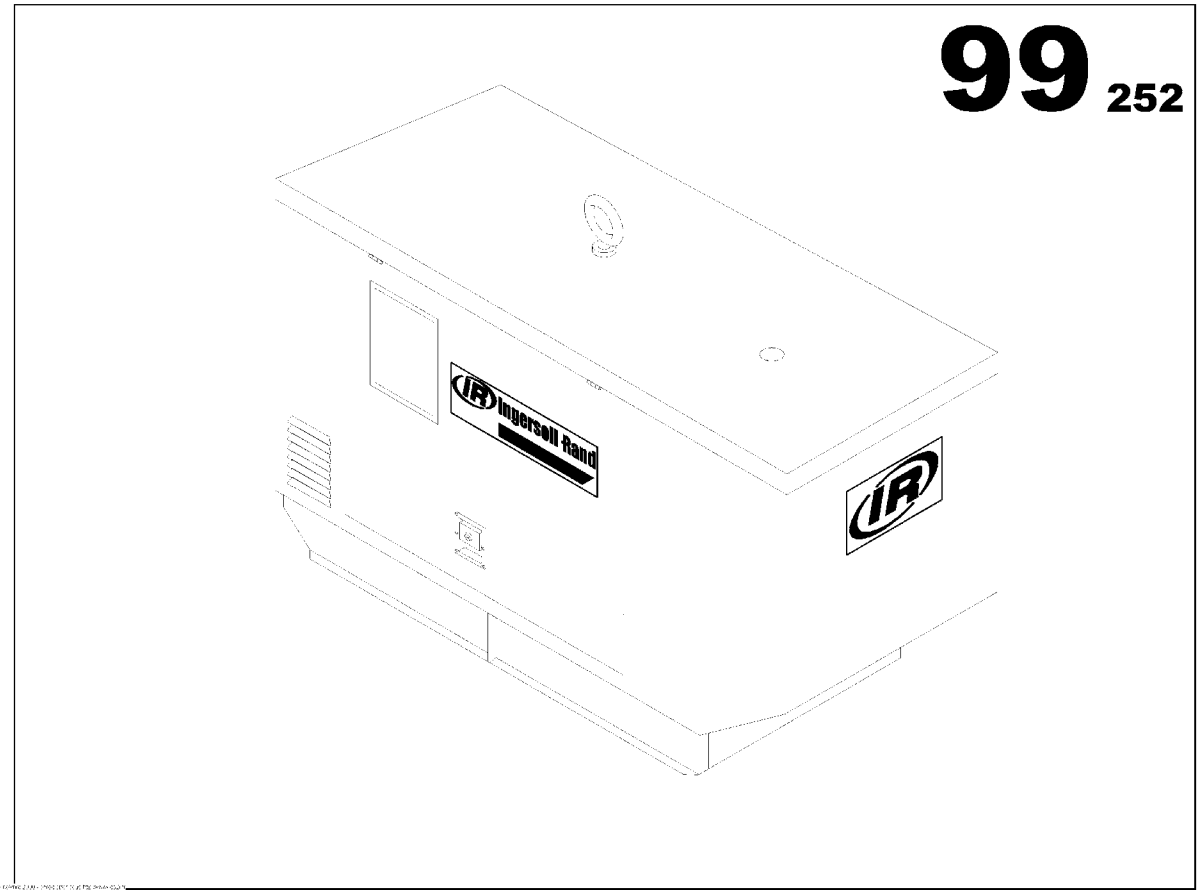

G016

Part numbers listed are only parts used in this model

Item	Part No.	Description	Qty	Un	From SN	To SN	Order PN	Page
1		G016 *-Basic Version*	1	U N				3
2		BASE INTELISYS OPTION	1	UN				161
3		AUTO START OPTION	1	UN				189
4		ADJUSTABLE EARTH FAULT PROTECTION WITH INTELISYS	1	UN				237
5		ADJUSTABLE EARTH FAULT PROTECTION WITH INTELISYS	1	UN				247
6		3 WAY FUEL VALVES OPTION	1	UN				289
7		REINFORCED INSULATION OPTION	1	UN				295

G016

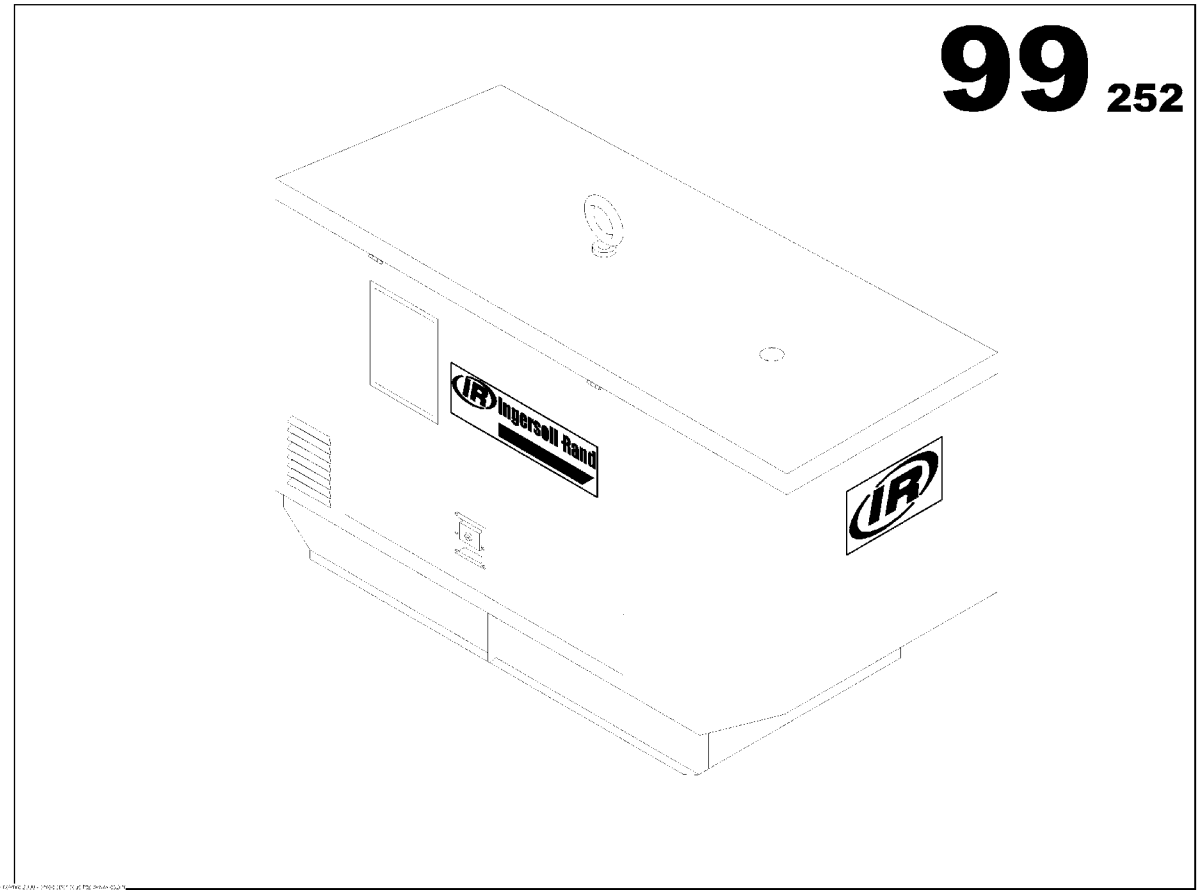

G016

Part numbers listed are only parts used in this model

Item	Part No.	Description	Qty	Un	From SN	To SN	Order PN	Page
1		ENGINE FUNCTION	1	UN				5
2		ALTERNATOR FUNCTION	1	UN				27
3		COOLER FUNCTION	1	UN				35
4		FUEL FUNCTION	1	UN				43
5		STARTING FUNCTION	1	UN				63
6		EXHAUST FUNCTION	1	UN				69
7		FRAME FUNCTION	1	UN				79
8		CANOPY FONCTION	1	UN				89
9		ELECTRICAL FUNCTION	1	UN				113
10		POWER CONNECTION BLOCK FUNCTION	1	UN				147
11		DOCUMENTATION OPTION	1	UN				

ENGINE FUNCTION

Non illustré
Not illustrated

ENGINE FUNCTION

Part numbers listed are only parts used in this model

Item	Part No.	Description	Qty	Un	From SN	To SN	Order PN	Page
1	85413920	ENGINE MITSUBISHI S4L2 SAE 5/7.5 *-61SD*	1	UN			85413920	7
2	85414613	AIR FILTER HEAVY DUTY ASSEMBLY	1	UN			85414613	9
3	85496982	WATER TEMPERATURE OIL PRESSURE SECURITY ASSEMBLY *-Provided with the Engine*	1	UN			85496982	
4	85414654	SUMP DRAIN PUMP ASSEMBLY	1	UN			85414654	13
5		ENGINE WIRING FUNCTION	1	UN				17

ENGINE MITSUBISHI S4L2 SAE 5/7.5

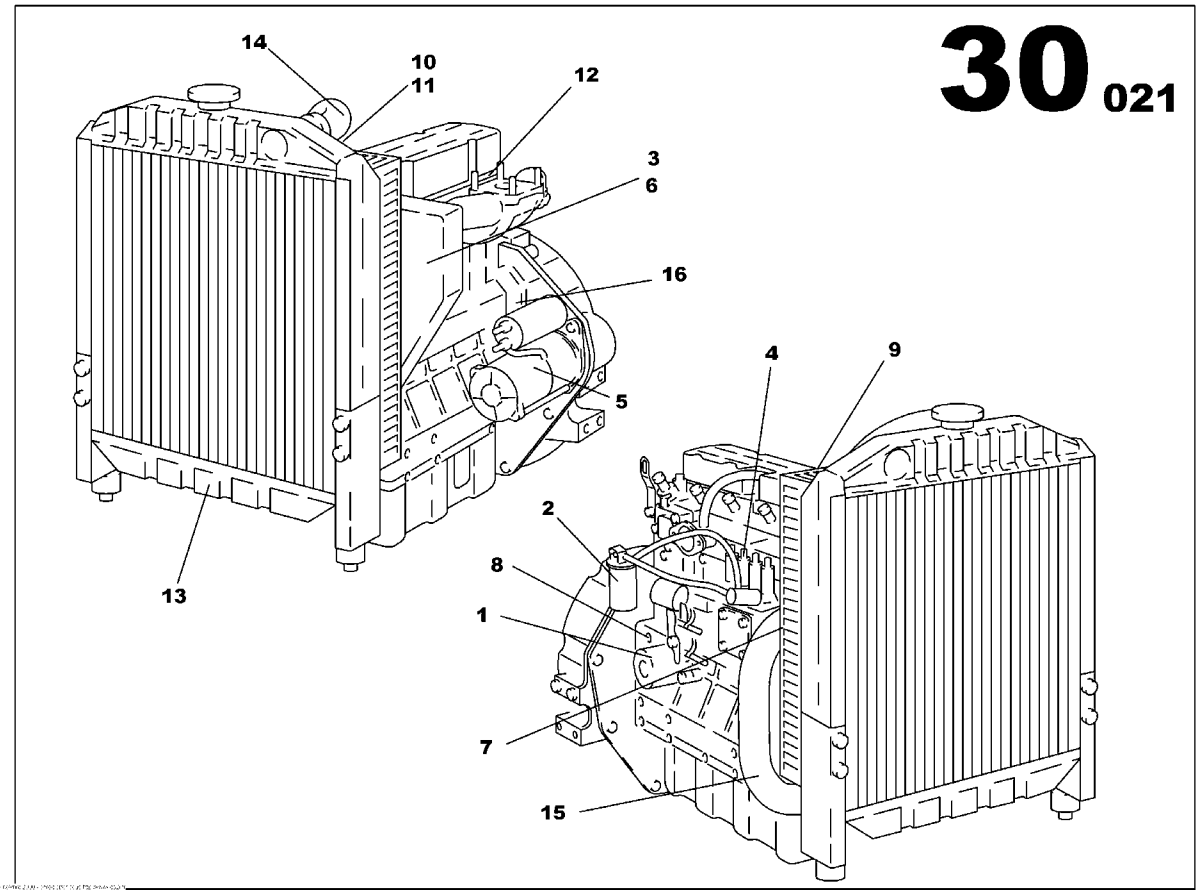

ENGINE MITSUBISHI S4L2 SAE 5/7.5
85413920

Part numbers listed are only parts used in this model

Item	Part No.	Description	Qty	Un	From SN	To SN	Order PN	Page
1	85426849	LUBE OIL FILTER	1	UN			85426849	
2	85426815	FUEL FILTER	1	UN			85426815	
3	85400190	BELT *Engine serial Number<24875-*	1	UN			85400190	
3	85621555	BELT *Engine serial Number>24874-*	1	UN			85621555	
4	85636686	INJECTOR NOZZLE	4	UN			85636686	
5	85621522	STARTER *Engine SN 45654->-*	1	UN			85621522	
5	85400075	STARTER *Engine serial Number<45654-*	1	UN			85400075	
6	85491546	CHARGING ALTERNATOR	1	UN			85491546	
7	85400299	WATER PUMP	1	UN			85400299	
8	85508182	PRESSURE SWITCH *Engine serial Number>4691-*	1	UN			85508182	
8	85625382	OIL PRESSURE SENSOR *Engine SN->46091-*	1	UN			85625382	
9	85426252	TEMPERATURE SWITCH	1	UN			85426252	
10	85400349	THERMOSTAT SEAL	1	UN			85400349	
11	85400091	THERMOSTAT	1	UN			85400091	
12	85400208	ROCKER COVER GASKET	1	UN			85400208	
13	85426054	RADIATOR	1	UN			85426054	
14	85425569	RADIATOR TOP HOSE	1	UN			85425569	
15	85401321	RADIATOR BOTTOM HOSE	1	UN			85401321	
16	85636678	PISTON RING SET	3	UN			85636678	

AIR FILTER HEAVY DUTY ASSEMBLY

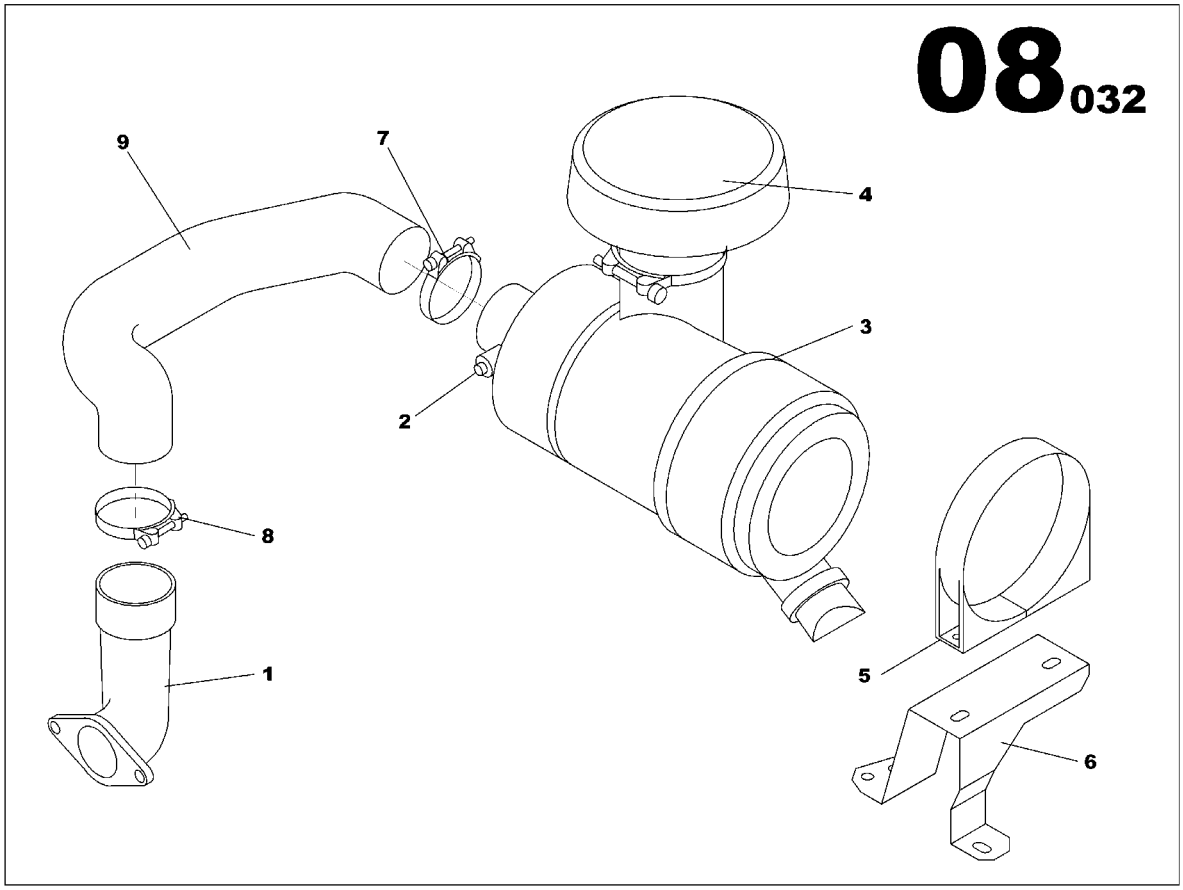

AIR FILTER HEAVY DUTY ASSEMBLY
85414613

Part numbers listed are only parts used in this model

Item	Part No.	Description	Qty	Un	From SN	To SN	Order PN	Page
1	85416386	AIR FILTER INLET PIPE	1	UN			85416386	
2	85413581	AIR RESTRICTION INDICATOR	1	UN			85413581	
3	85413433	AIR FILTER HEAVY DUTY	1	UN			85413433	11
4	85412823	RAIN CAP	1	UN			85412823	
5	85412880	CLAMP D146	1	UN			85412880	
6	85425379	AIR FILTER BRACKET MI S4L2	1	UN			85425379	
7	85412922	HOSE CLIP D50/70	1	UN			85412922	
8	85409399	HOSE CLIP D60/80	1	UN			85409399	
9	85429587	RUBBER HOSE ELBOW D57	1	UN			85429587	

AIR FILTER HEAVY DUTY

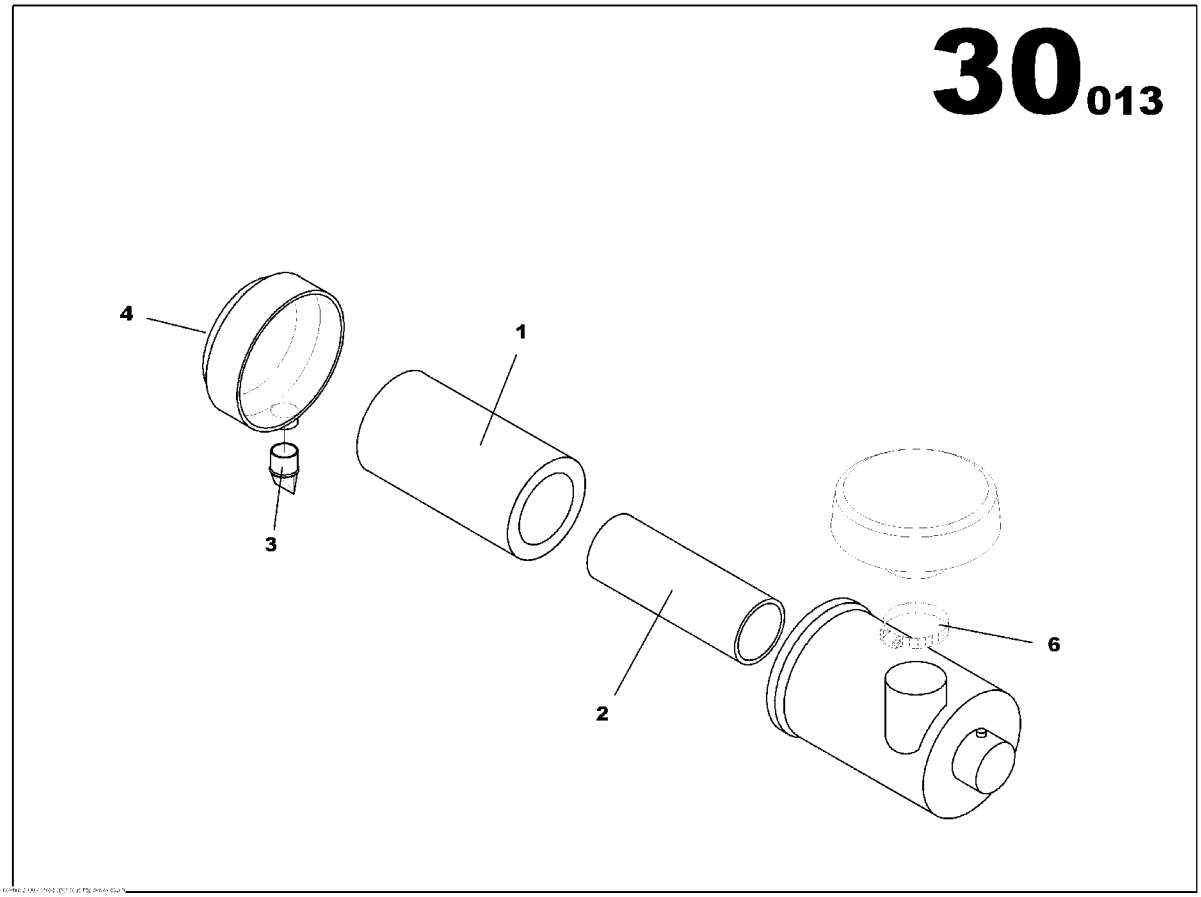

AIR FILTER HEAVY DUTY
85413433

Part numbers listed are only parts used in this model

Item	Part No.	Description	Qty	Un	From SN	To SN	Order PN	Page
1	85400646	AIR FILTER ELEMENT	1	UN			85400646	
2	85400695	AIR FILTER ELEMENT	1	UN			85400695	
3	85501252	VACUATOR VALVE	1	UN			85501252	
4	85501278	DUST CUP	1	UN			85501278	
6	85500544	HOSE CLIP D40/60	1	UN			85500544	

SUMP DRAIN PUMP ASSEMBLY

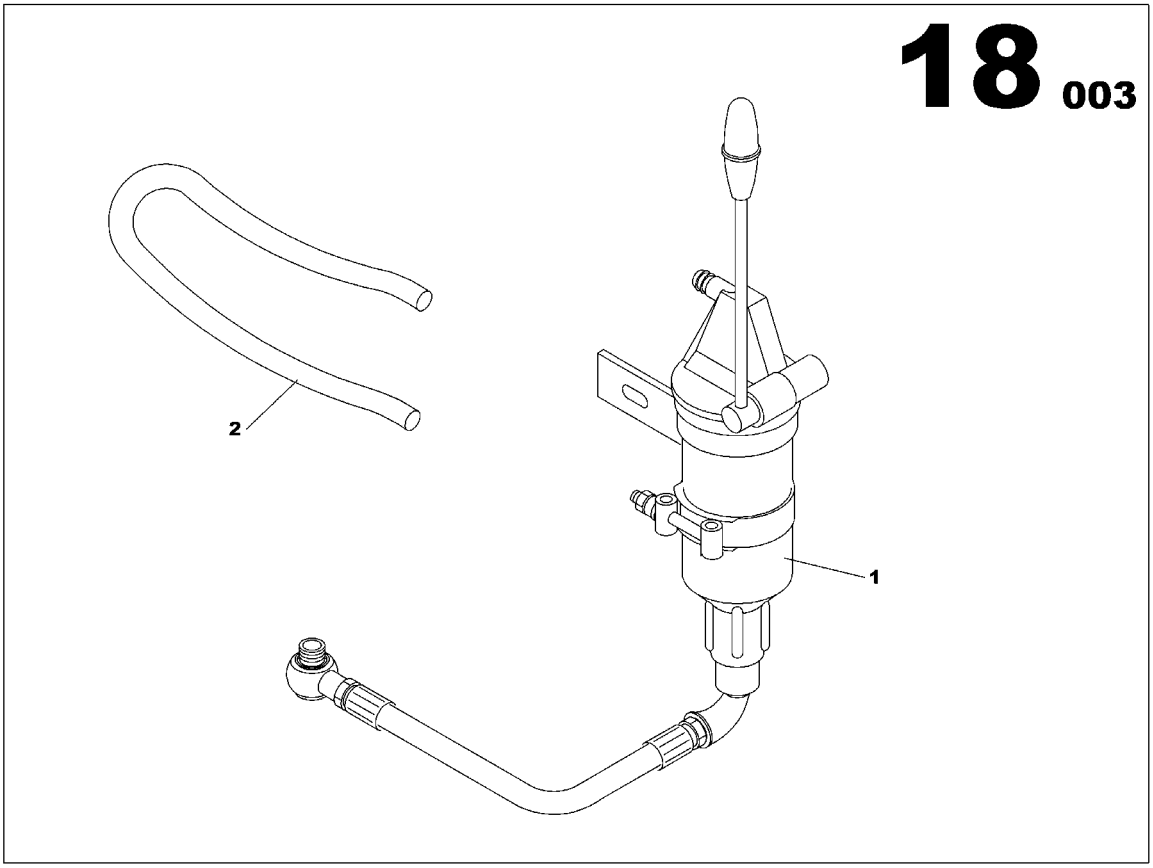

SUMP DRAIN PUMP ASSEMBLY
85414654

Part numbers listed are only parts used in this model

Item	Part No.	Description	Qty	Un	From SN	To SN	Order PN	Page
1	85415222	OIL SUMP DRAIN PUMP ASSEMBLY	1	UN			85415222	15
2	85416428	FLEXIBLE HOSE D5.5	0.4	ML			85416428	
2	85416428	FLEXIBLE HOSE D5.5	0.5	ML			85416428	
2	85416428	FLEXIBLE HOSE D5.5	1.1	ML			85416428	

OIL SUMP DRAIN PUMP ASSEMBLY

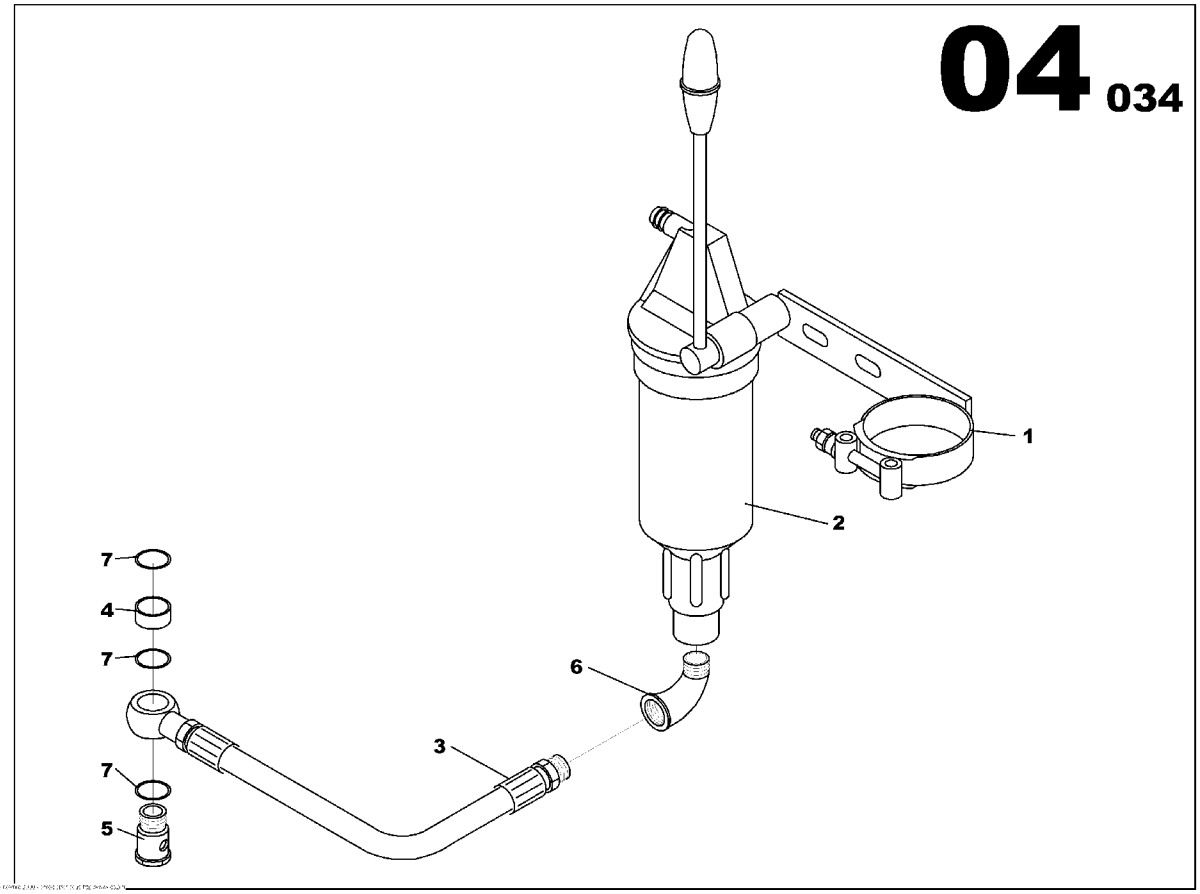

OIL SUMP DRAIN PUMP ASSEMBLY
85415222

Part numbers listed are only parts used in this model

Item	Part No.	Description	Qty	Un	From SN	To SN	Order PN	Page
1	85403426	OIL SUMP PUMP BRACKET	1	UN			85403426	
2	85403434	MANUAL PUMP	1	UN			85403434	
3	85413474	HOSE L450	1	UN			85413474	
4	85413359	SPACER Th14 D22	1	UN			85413359	
5	85416493	BANJO SCREW M14X150 L41	1	UN			85416493	
6	85409308	PIPE UNION ELBOW 90° MAL/FEM 3/8G	1	UN			85409308	
7	85409522	GASKET D14x20	3	UN			85409522	

ENGINE WIRING FUNCTION

Non illustré
Not illustrated

ENGINE WIRING FUNCTION

Part numbers listed are only parts used in this model

Item	Part No.	Description	Qty	Un	From SN	To SN	Order PN	Page
1	85635233	ENGINE WIRING LOOM MI S3/S4L2	1	UN			85635233	19

ENGINE WIRING LOOM MI S3/S4L2

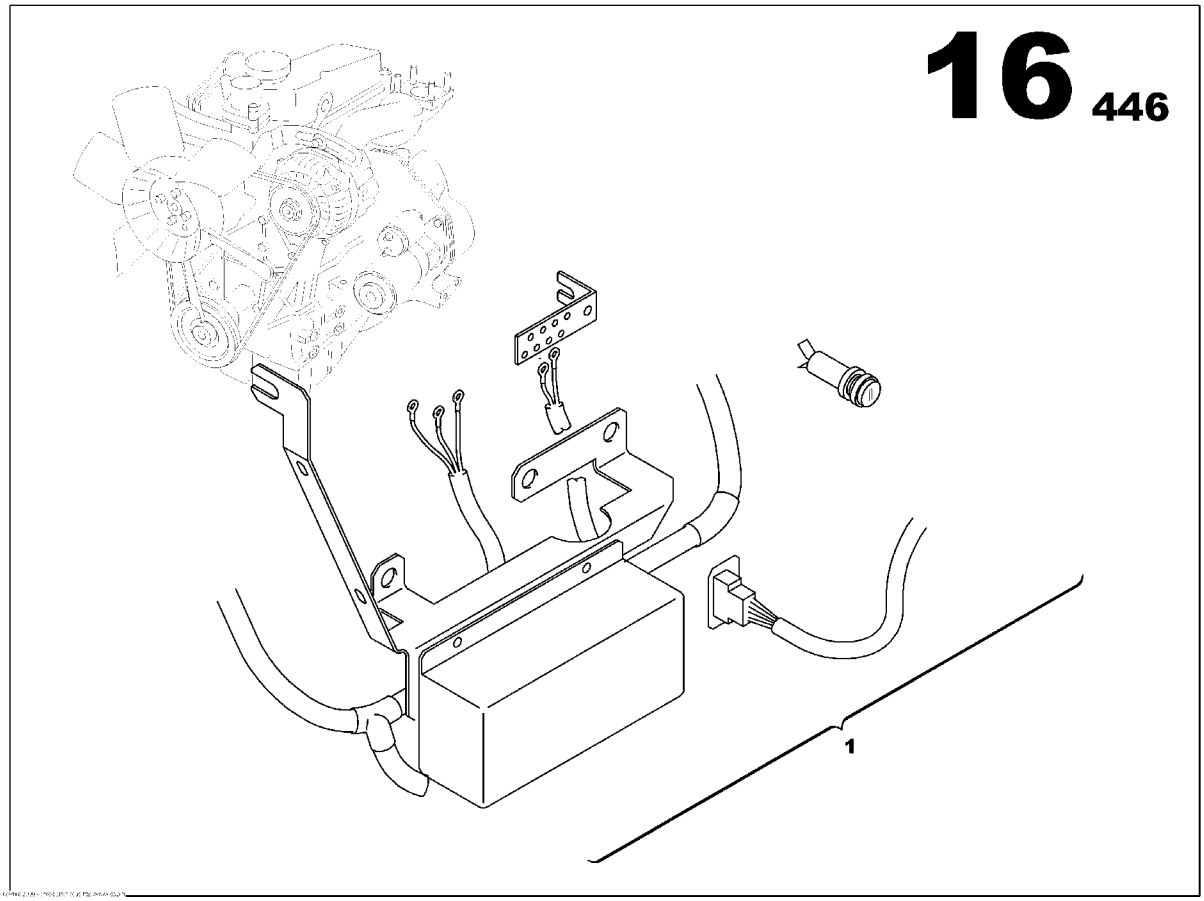

ENGINE WIRING LOOM MI S3/S4L2

85635233

Part numbers listed are only parts used in this model

Item	Part No.	Description	Qty	Un	From SN	To SN	Order PN	Page
1	85626943	ENGINE WIRING LOOM MI S3/S4L2	1	UN	02009426		85626943	21

ENGINE WIRING LOOM MI S3/S4L2

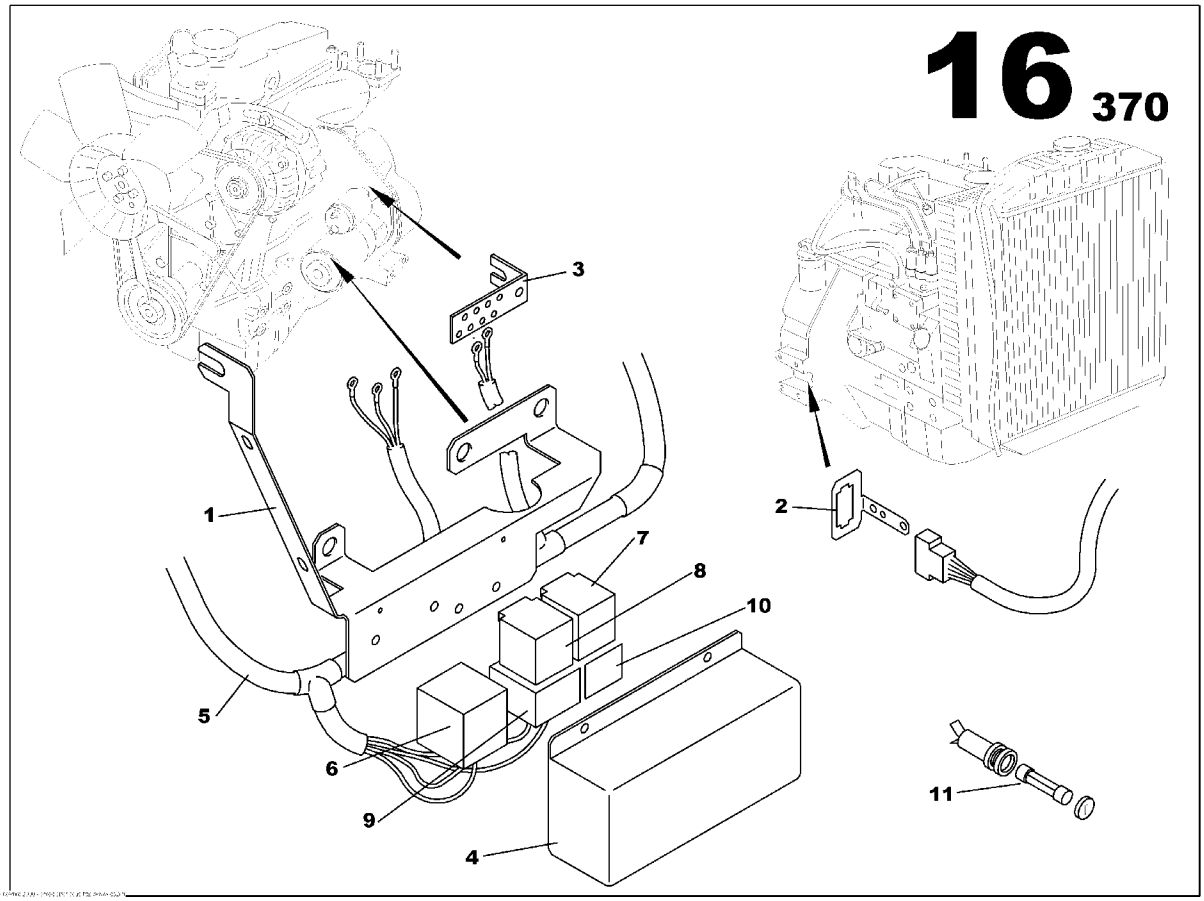

ENGINE WIRING LOOM MI S3/S4L2
85626943

Part numbers listed are only parts used in this model

Item	Part No.	Description	Qty	Un	From SN	To SN	Order PN	Page
1	85415941	WIRING BRACKET MI S3L2/S4L2	1	UN			85415941	
2	85407047	CONNECTOR BRACKET	1	UN			85407047	
3	85635266	COPPER BAR 5x25	1	UN			85635266	
4	85416279	STARTING RELAY PROTECTION PANEL	1	UN			85416279	
5	85635688	ENGINE WIRING LOOM MI S3/S4	1	UN			85635688	
6	85414191	MITSUBISHI RELAY ASSEMBLY	1	UN			85414191	23
7	85408888	RELAY 12V 70A WITH BRAKET	1	UN			85408888	
8	85408896	RELAY 12V 20/30A	1	UN			85408896	
9	85413292	AUTOMOBILE RELAY BASE	1	UN			85413292	
10	85408912	AUTOMOBILE RELAY BASE	1	UN			85408912	
11	85635878	FUSE HOUSING ASSEMBLY	1	UN			85635878	25

MITSUBISHI RELAY ASSEMBLY

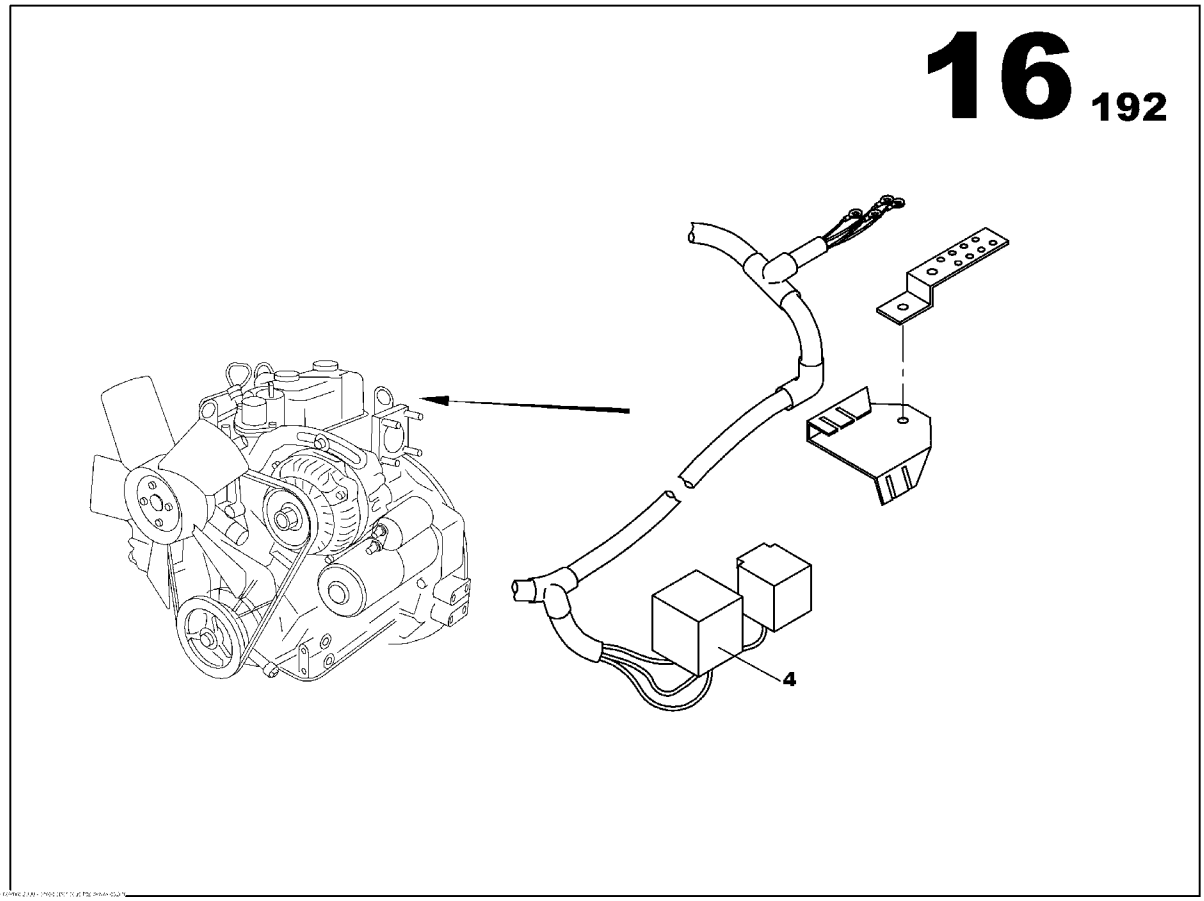

MITSUBISHI RELAY ASSEMBLY
85414191

Part numbers listed are only parts used in this model

Item	Part No.	Description	Qty	Un	From SN	To SN	Order PN	Page
4	85415792	STARTING RELAY	1	UN			85415792	

FUSE HOUSING ASSEMBLY

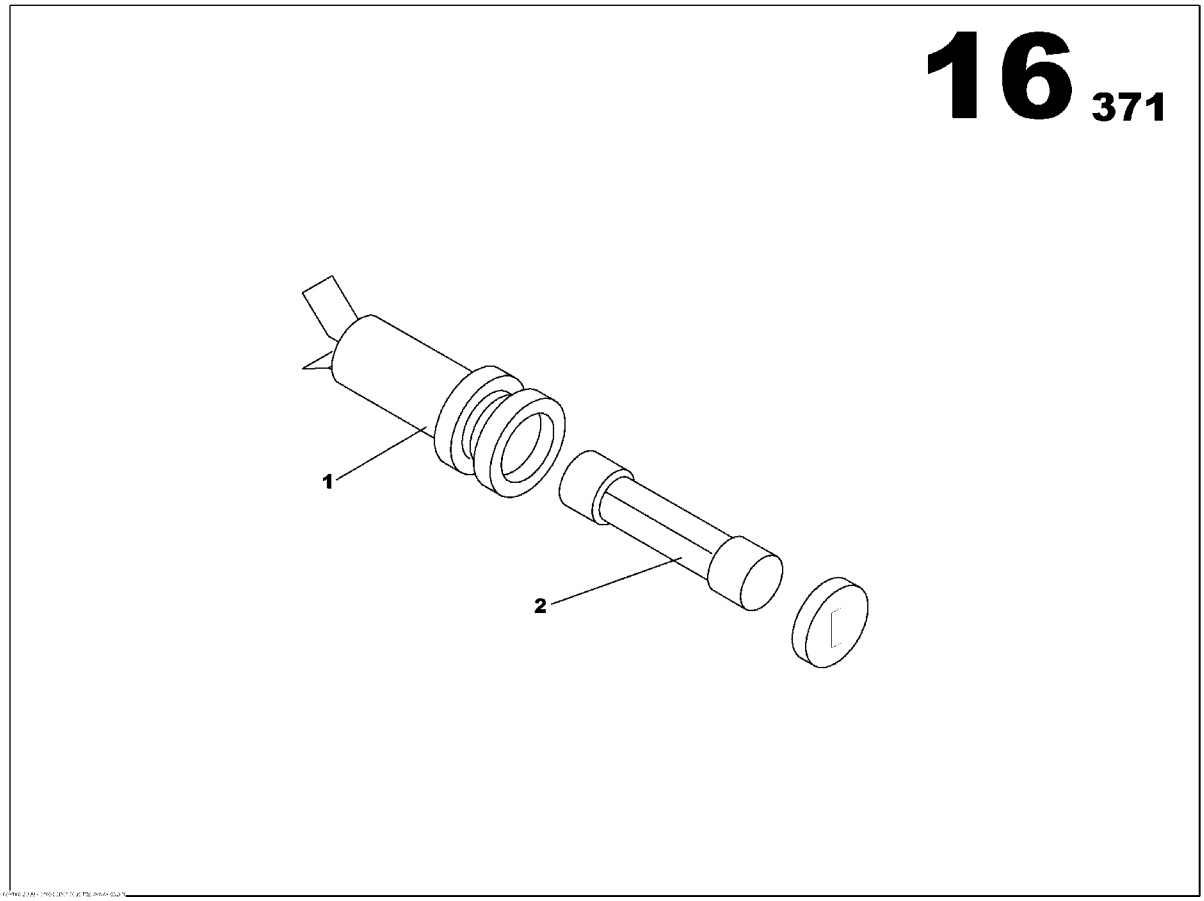

FUSE HOUSING ASSEMBLY
85635878

Part numbers listed are only parts used in this model

Item	Part No.	Description	Qty	Un	From SN	To SN	Order PN	Page
1	85635860	FUSE HOLDER 5x20	1	UN			85635860	
2	85636702	FUSE CYLINDRICAL 0.16A	1	UN			85636702	

ALTERNATOR FUNCTION

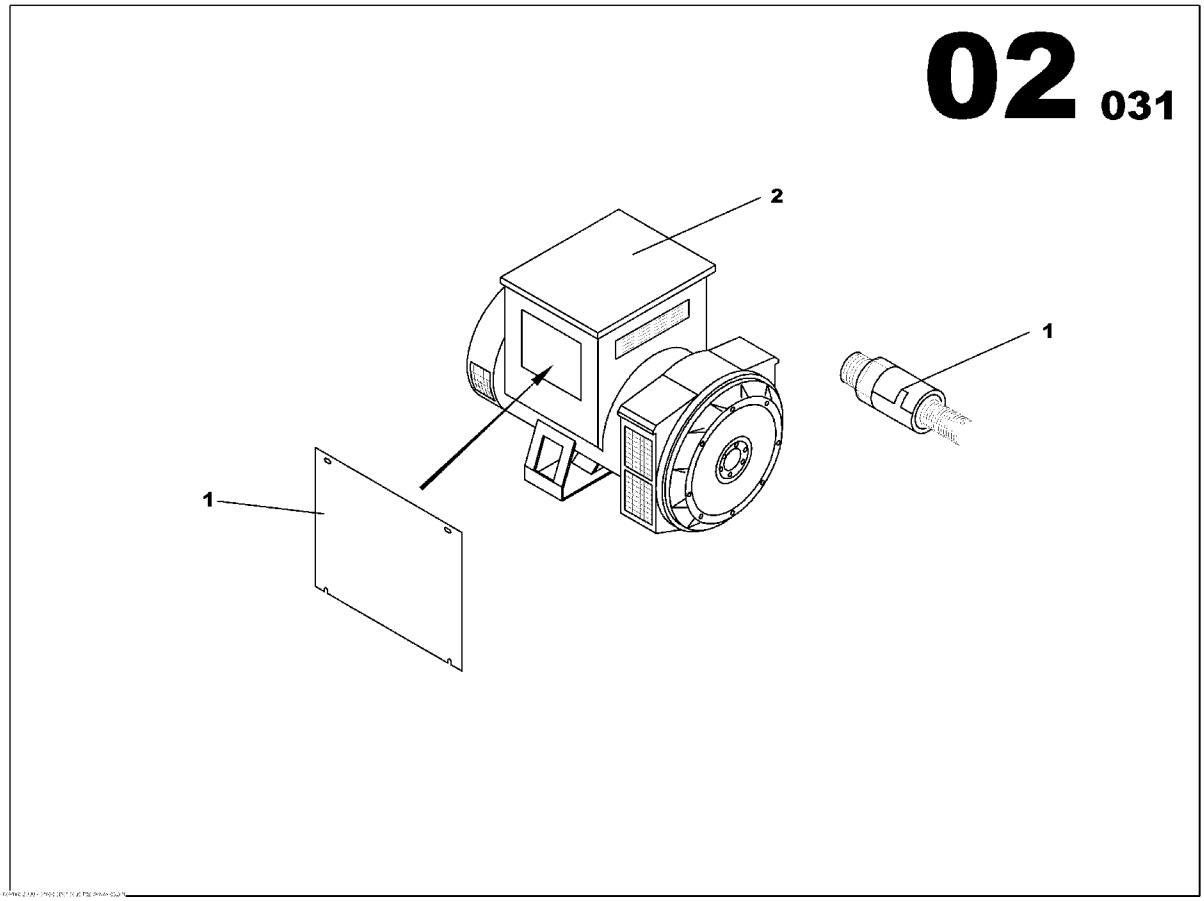

ALTERNATOR FUNCTION

Part numbers listed are only parts used in this model

Item	Part No.	Description	Qty	Un	From SN	To SN	Order PN	Page
1	85634772	OUTPUT CABLES ALTERNATOR ASSEMBLY	1	UN			85634772	29
2		ALTERNATOR	1	UN				31

OUTPUT CABLES ALTERNATOR ASSEMBLY

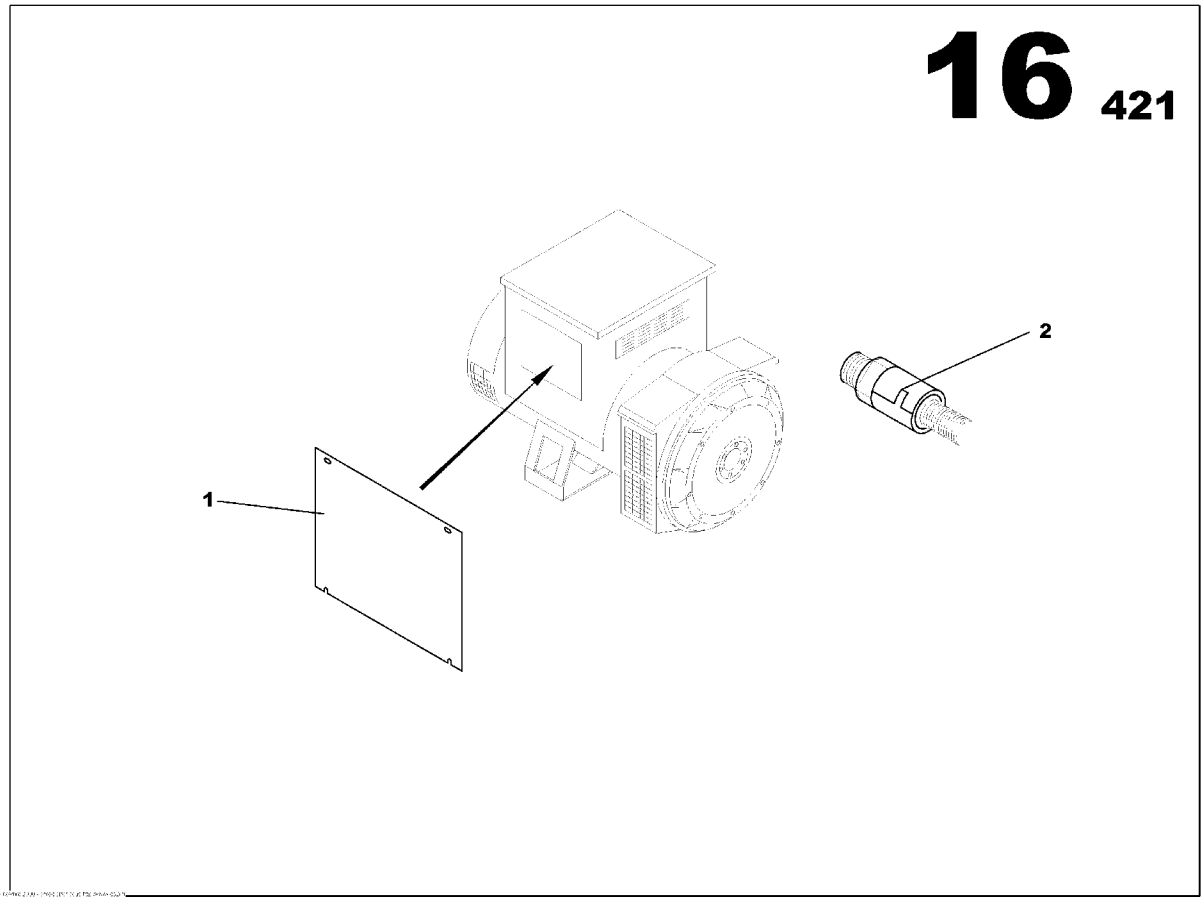

OUTPUT CABLES ALTERNATOR ASSEMBLY
85634772

Part numbers listed are only parts used in this model

Item	Part No.	Description	Qty	Un	From SN	To SN	Order PN	Page
1	85501435	CABLE OUTLET PLATE	1	UN			85501435	
2	85501575	PIPE UNION PG36	1	UN			85501575	

ALTERNATOR

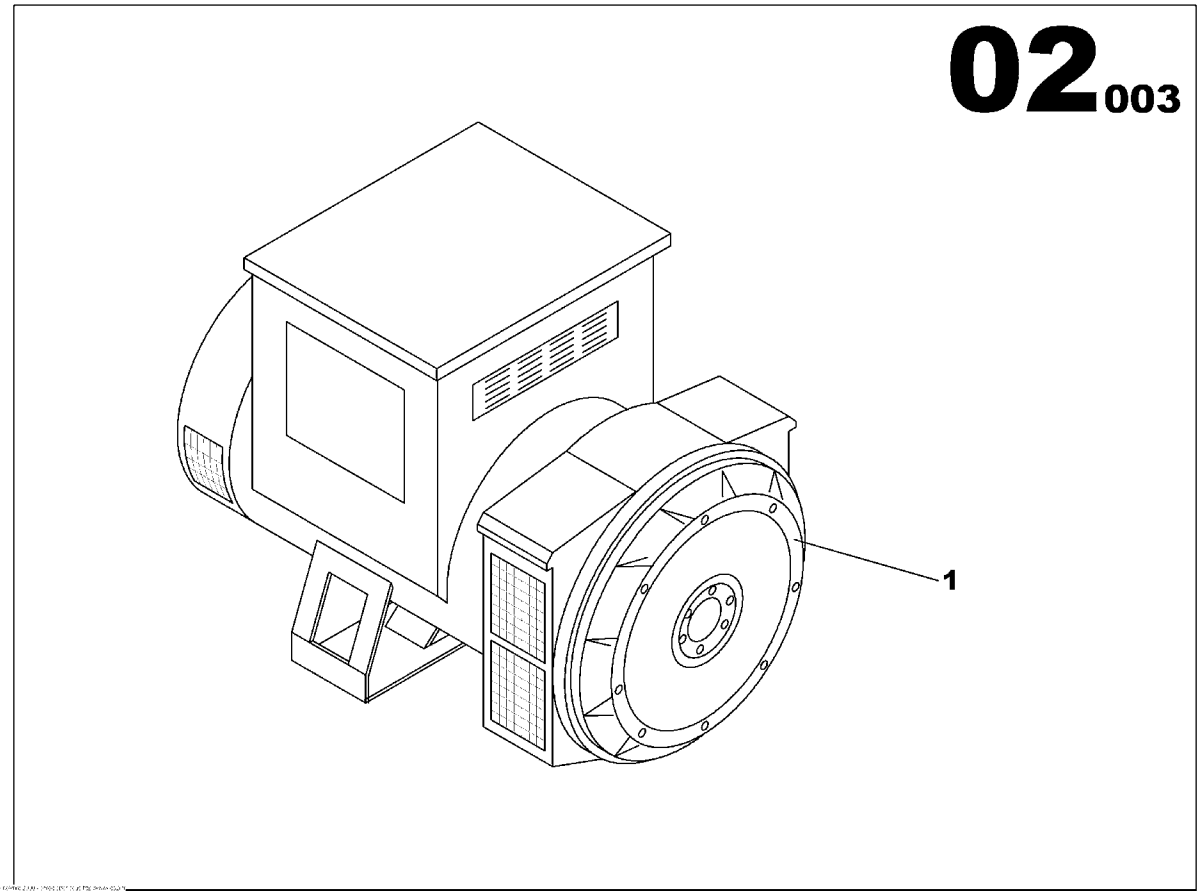

ALTERNATOR

Part numbers listed are only parts used in this model

Item	Part No.	Description	Qty	Un	From SN	To SN	Order PN	Page
1	85429090	ALTERNATOR LS 422S	1	UN			85429090	33

ALTERNATOR LS 422S

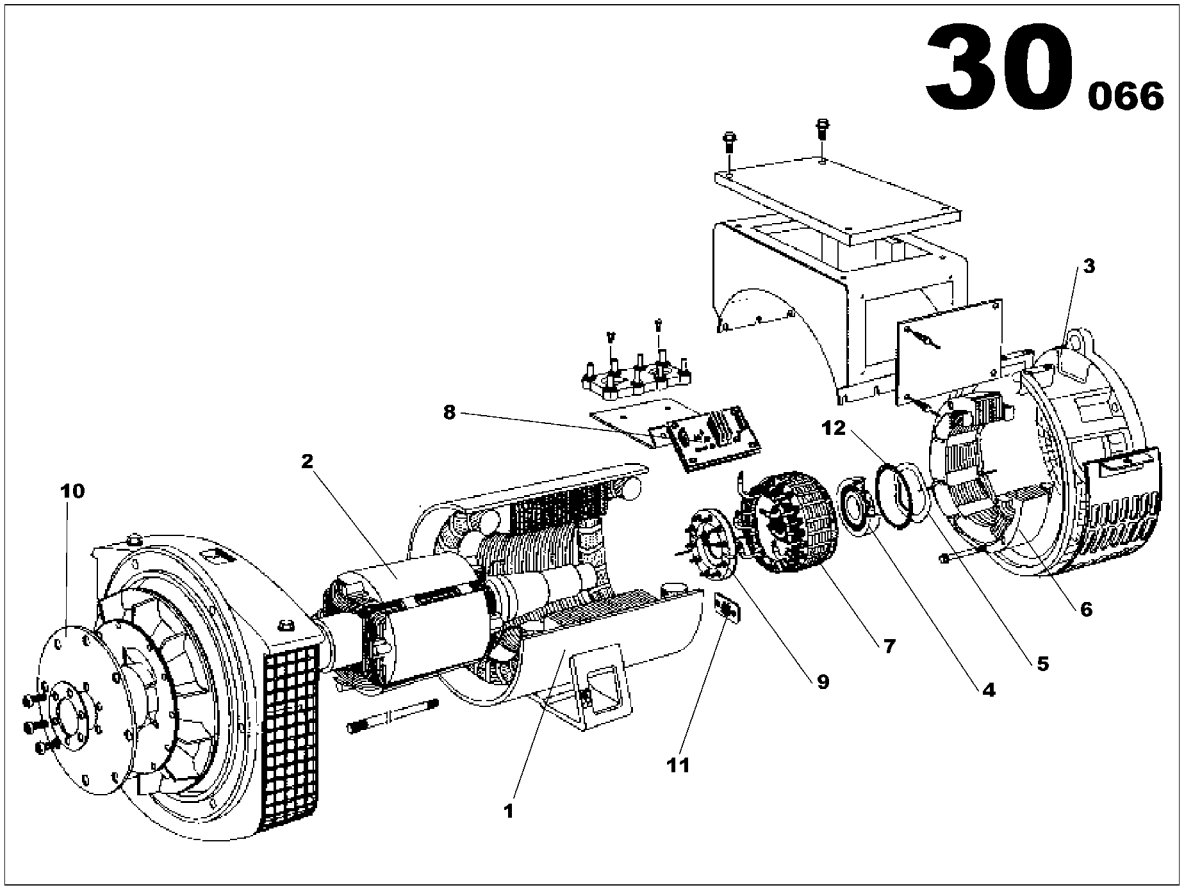

ALTERNATOR LS 422S
85429090

Part numbers listed are only parts used in this model

Item	Part No.	Description	Qty	Un	From SN	To SN	Order PN	Page
1	85508745	WOUND STATOR ASSEMBLY	1	UN			85508745	
2	85509073	WOUND ROTOR ASSEMBLY	1	UN			85509073	
3	85508851	N.D.E BRACKET	1	UN			85508851	
4	85425882	BEARING	1	UN			85425882	
5	85509032	WAVY WASHER	1	UN			85509032	
6	85508893	WOUND EXCITER FIELD	1	UN			85508893	
7	85508943	WOUND EXCITER ARMATURE	1	UN			85508943	
8	85402451	GOVERNOR	1	UN			85402451	
9	85425858	DIODE BRIDGE ASSEMBLY	1	UN			85425858	
10	85425965	DRIVE DISC LSA 422S5	1	UN			85425965	
11	85425866	SURGE SUPPRESSOR	1	UN			85425866	
12	85508992	O RING	1	UN			85508992	

COOLER FUNCTION

Non illustré
Not illustrated

COOLER FUNCTION

Part numbers listed are only parts used in this model

Item	Part No.	Description	Qty	Un	From SN	To SN	Order PN	Page
1	85414837	RADIATOR MI S3/S4 ASSEMBLY	1	UN			85414837	37

RADIATOR MI S3/S4 ASSEMBLY

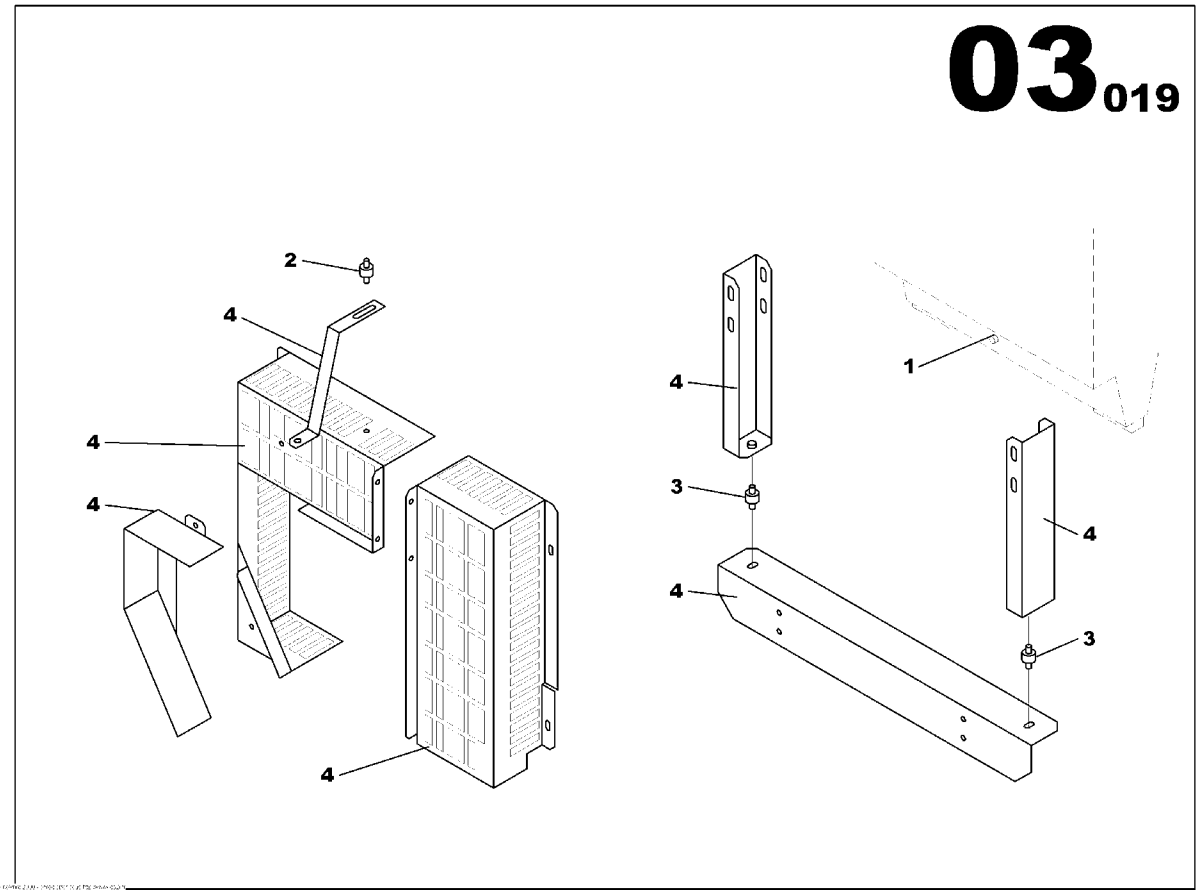

RADIATOR MI S3/S4 ASSEMBLY
85414837

Part numbers listed are only parts used in this model

Item	Part No.	Description	Qty	Un	From SN	To SN	Order PN	Page
1	85415214	RADIATOR DRAIN MI L2E/L3E ASSEMBLY	1	UN			85415214	39
2	85400018	ANTI-VIBRATION MOUNT D25 Th22	1	UN			85400018	
3	85400026	ANTI-VIBRATION MOUNT D40 Th28	2	UN			85400026	
4	85627487	FAN GUARD ASSEMBLY	1	UN			85627487	41

RADIATOR DRAIN MI L2E/L3E ASSEMBLY

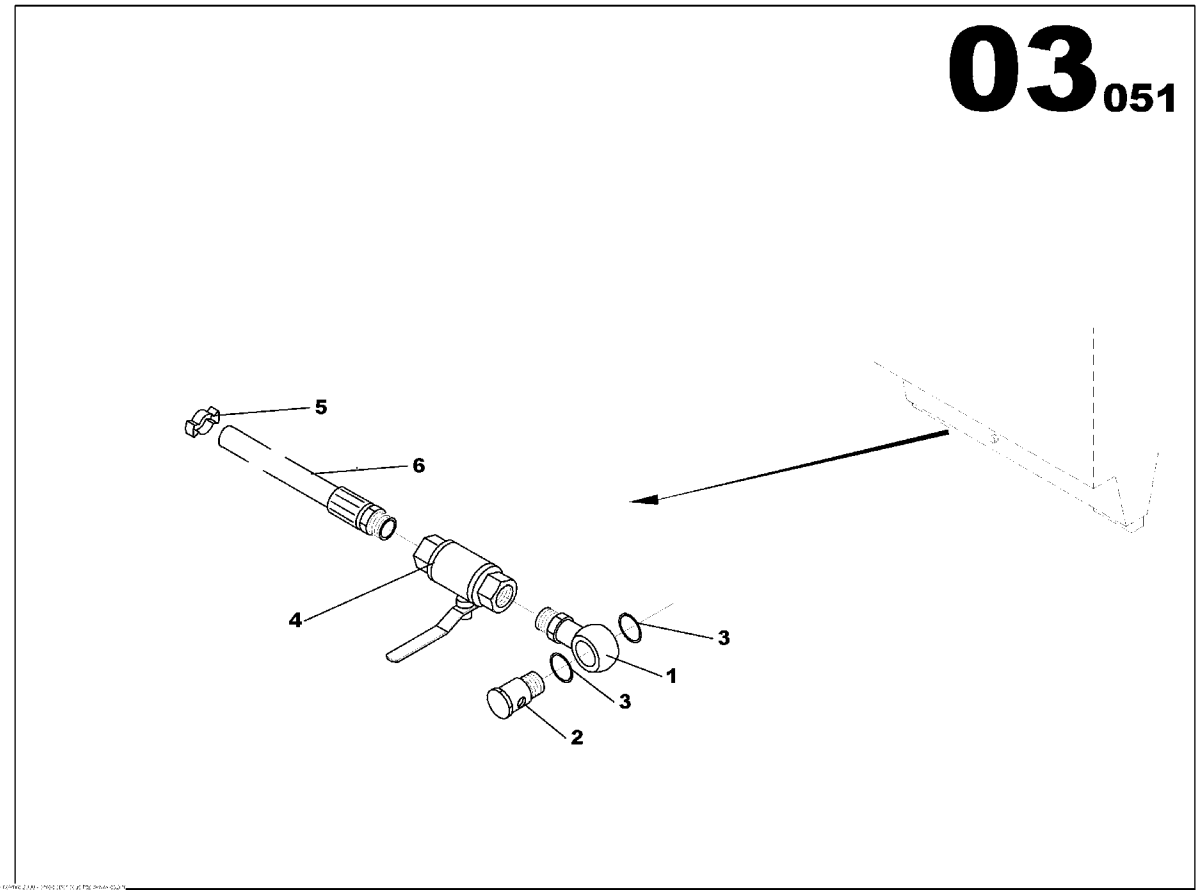

RADIATOR DRAIN MI L2E/L3E ASSEMBLY
85415214

Part numbers listed are only parts used in this model

Item	Part No.	Description	Qty	Un	From SN	To SN	Order PN	Page
1	85415735	BANJO CONNECTOR MALE D08	1	UN			85415735	
2	85416485	BANJO SCREW M12x125 L24	1	UN			85416485	
3	85413748	GASKET D12x18	2	UN			85413748	
4	85416469	2 WAY VALVE	1	UN			85416469	
5	17130824	SPRING CLAMP D10/13	2	UN			17130824	
6	85416436	FLEXIBLE HOSE D8x14	0.03	ML			85416436	

FAN GUARD ASSEMBLY

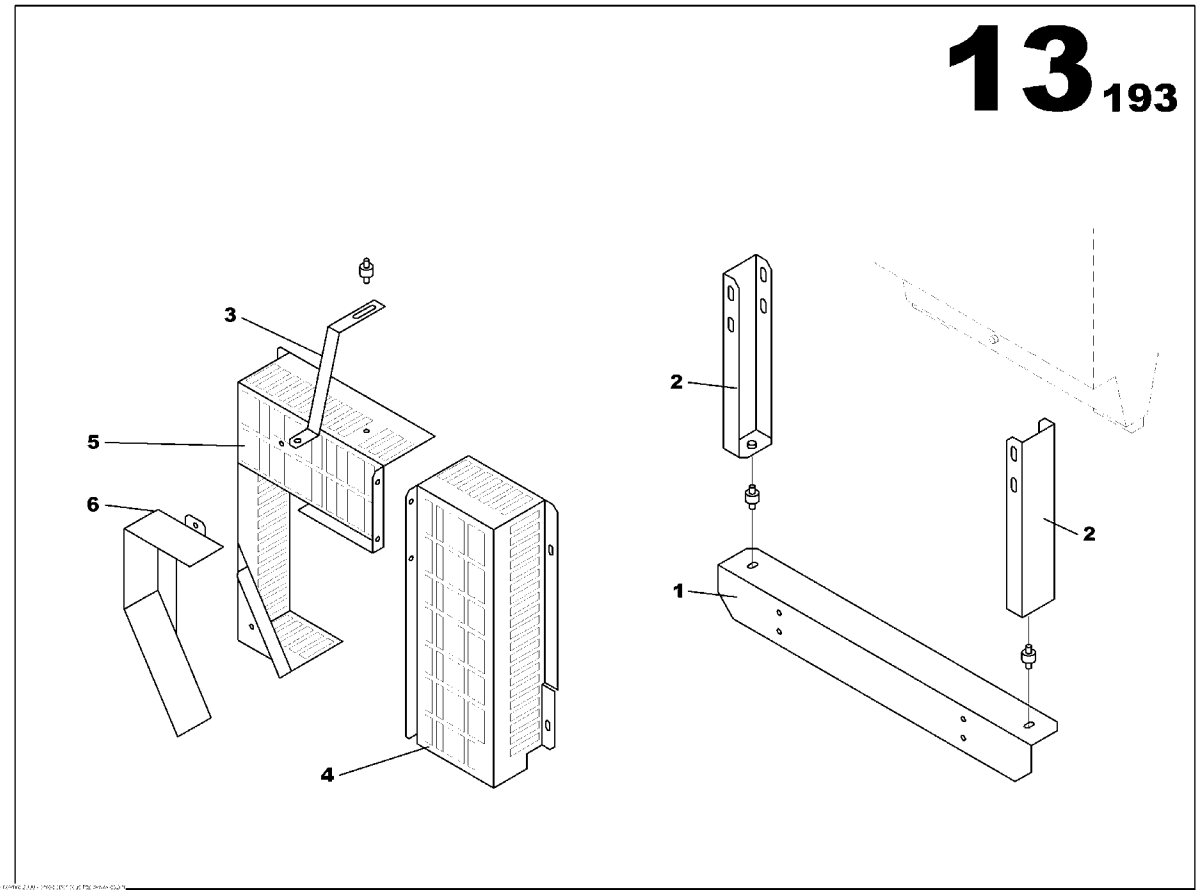

FAN GUARD ASSEMBLY
85627487

Part numbers listed are only parts used in this model

Item	Part No.	Description	Qty	Un	From SN	To SN	Order PN	Page
1	85416162	RADIATOR BRACKET MI S3L/S4L2	1	UN			85416162	
2	85415404	RADIATOR BRACKET ENGINE MI S3/S4	2	UN			85415404	
3	85415412	RADIATOR BRACKET ENGINE MI S3/S4	1	UN			85415412	
4	85415628	RADIATOR GUARD MI S3/S4	1	UN			85415628	
5	85415636	RADIATOR GUARD MI S3/S4	1	UN			85415636	
6	85415644	ALTERNATOR GUARD MI S3/S4	1	UN			85415644	

FUEL FUNCTION

Non illustré
Not illustrated

FUEL FUNCTION

Part numbers listed are only parts used in this model

Item	Part No.	Description	Qty	Un	From SN	To SN	Order PN	Page
1	85633220	FUEL PREFILTER KIT ASSEMBLY	1	UN			85633220	45
2		FUEL TANK M107 ASSEMBLY	1	UN				51

FUEL PREFILTER KIT ASSEMBLY

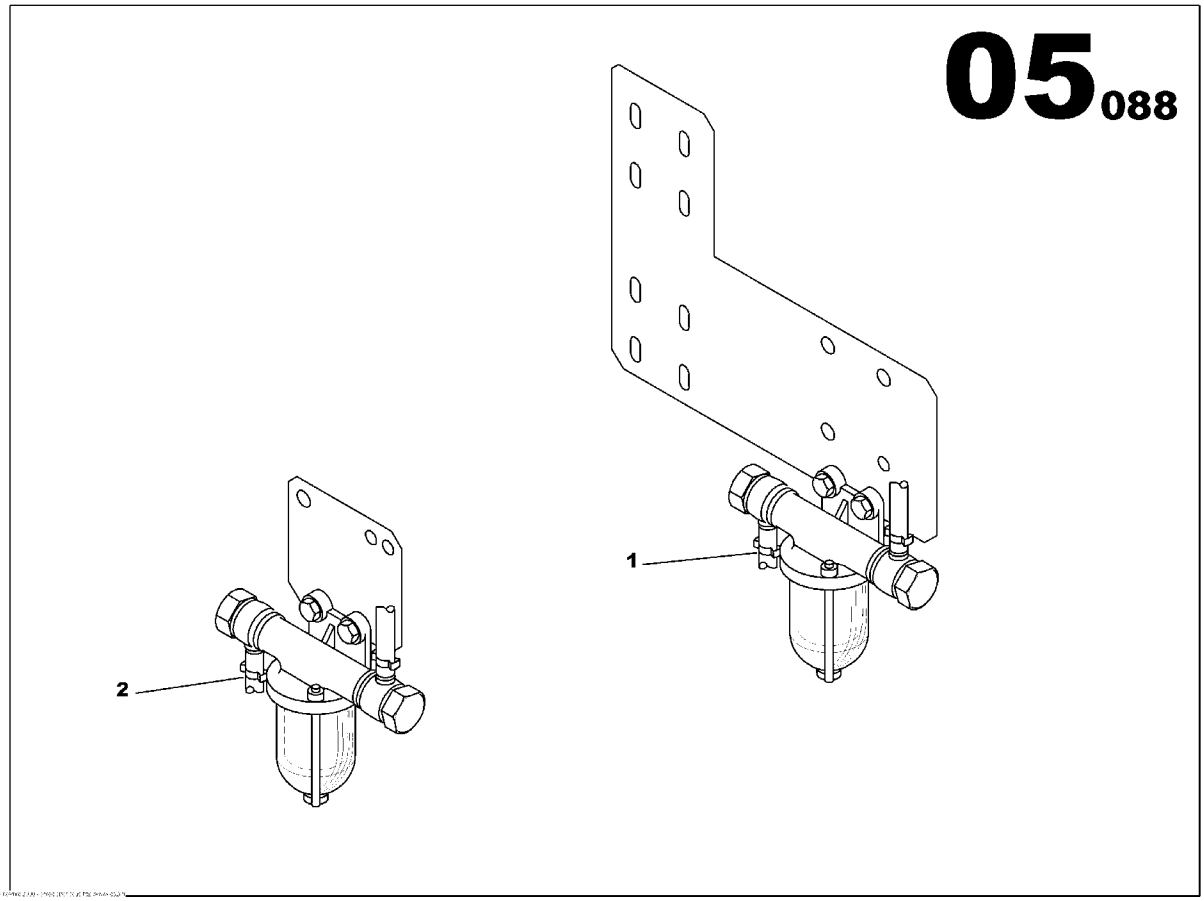

FUEL PREFILTER KIT ASSEMBLY
85633220

Part numbers listed are only parts used in this model

Item	Part No.	Description	Qty	Un	From SN	To SN	Order PN	Page
2	85633378	FUEL PREFILTER KIT ASSEMBLY	1	UN	02011031		85633378	47

FUEL PREFILTER KIT ASSEMBLY

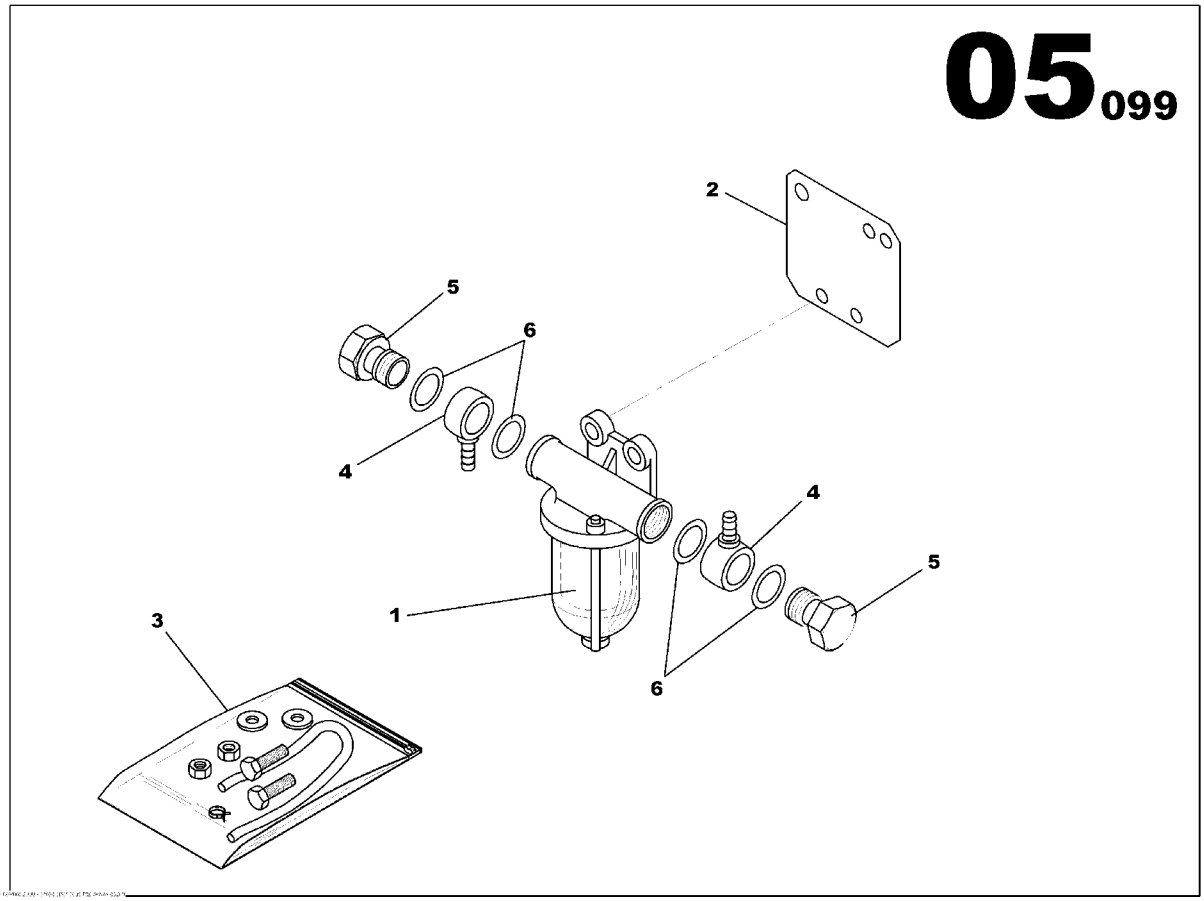

FUEL PREFILTER KIT ASSEMBLY
85633378

Part numbers listed are only parts used in this model

Item	Part No.	Description	Qty	Un	From SN	To SN	Order PN	Page
1	85403525	FUEL FILTER SEPARATOR	1	UN			85403525	
2	85633311	FUEL PREFILTER BRACKET	1	UN			85633311	
3	85636421	SCREWS ASSEMBLY	1	UN			85636421	49
4	85409274	BANJO CONNECTOR MALE D08	2	UN			85409274	
5	85409282	BANJO SCREW M14X150 L26	2	UN			85409282	
6	85409522	GASKET D14x20	4	UN			85409522	

SCREWS ASSEMBLY

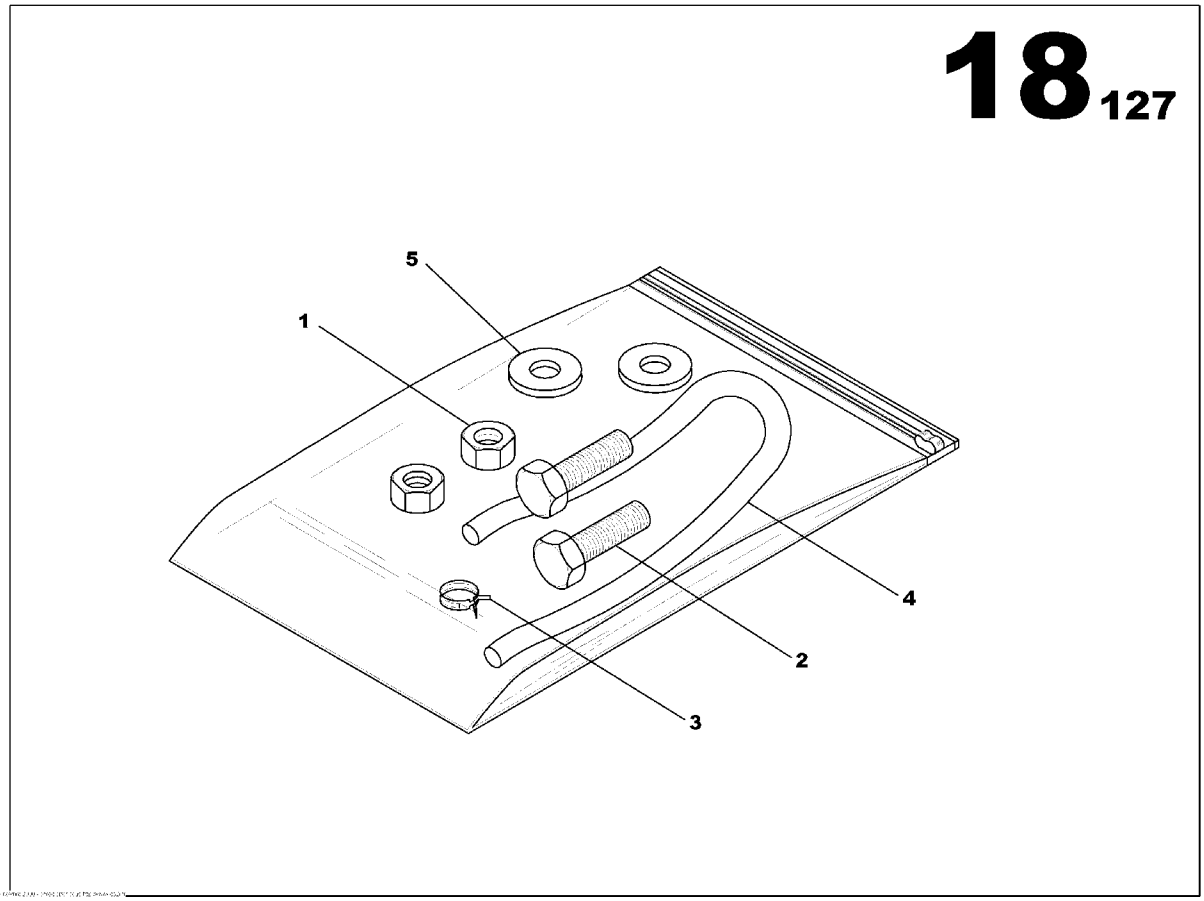

SCREWS ASSEMBLY
85636421

Part numbers listed are only parts used in this model

Item	Part No.	Description	Qty	Un	From SN	To SN	Order PN	Page
1	85507911	NUT M6	2	UN			85507911	
2	85636389	SCREW H M6x16	2	UN			85636389	
3	85621266	SPRING CLAMP D8.9/9.3	2	UN			85621266	
4	85416428	FLEXIBLE HOSE D5.5	2	ML			85416428	
5	85429793	WASHER 6x14	2	UN			85429793	

FUEL TANK M107 ASSEMBLY

Non illustré
Not illustrated

FUEL TANK M107 ASSEMBLY

Part numbers listed are only parts used in this model

Item	Part No.	Description	Qty	Un	From SN	To SN	Order PN	Page
	17130170	FUEL TANK M107 ASSEMBLY	1	UN			17130170	53

FUEL TANK M107 ASSEMBLY

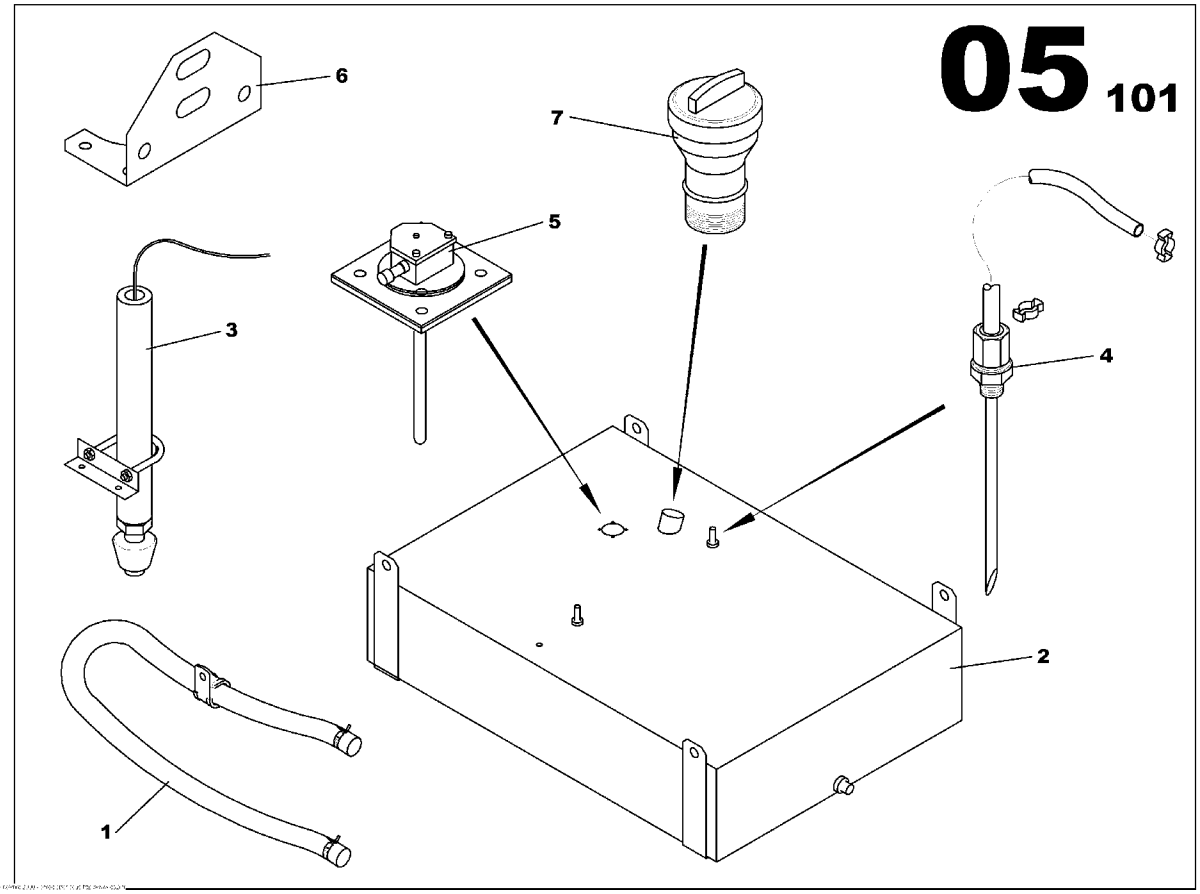

FUEL TANK M107 ASSEMBLY
17130170

Part numbers listed are only parts used in this model

Item	Part No.	Description	Qty	Un	From SN	To SN	Order PN	Page
1	17130196	COMBUSTIBLE VENT TANK ASSEMBLY	1	UN			17130196	57
2	17130154	TANK 230L	1	UN			17130154	
3	17130279	LEAKAGE DETECTION RETENTION BUND ASSEMBLY	1	UN			17130279	59
4	17130121	FUEL SUCCION PIPE L320 D8	1	UN			17130121	
5	17130287	TANK GAUGE ASSEMBLY	1	UN			17130287	61
6	85416147	ELECTRICAL PUMP BRACKET	1	UN			85416147	
7	85629541	FUEL FILLING FUNNEL BASE TANK	1	UN			85629541	55

FUEL FILLING FUNNEL BASE TANK

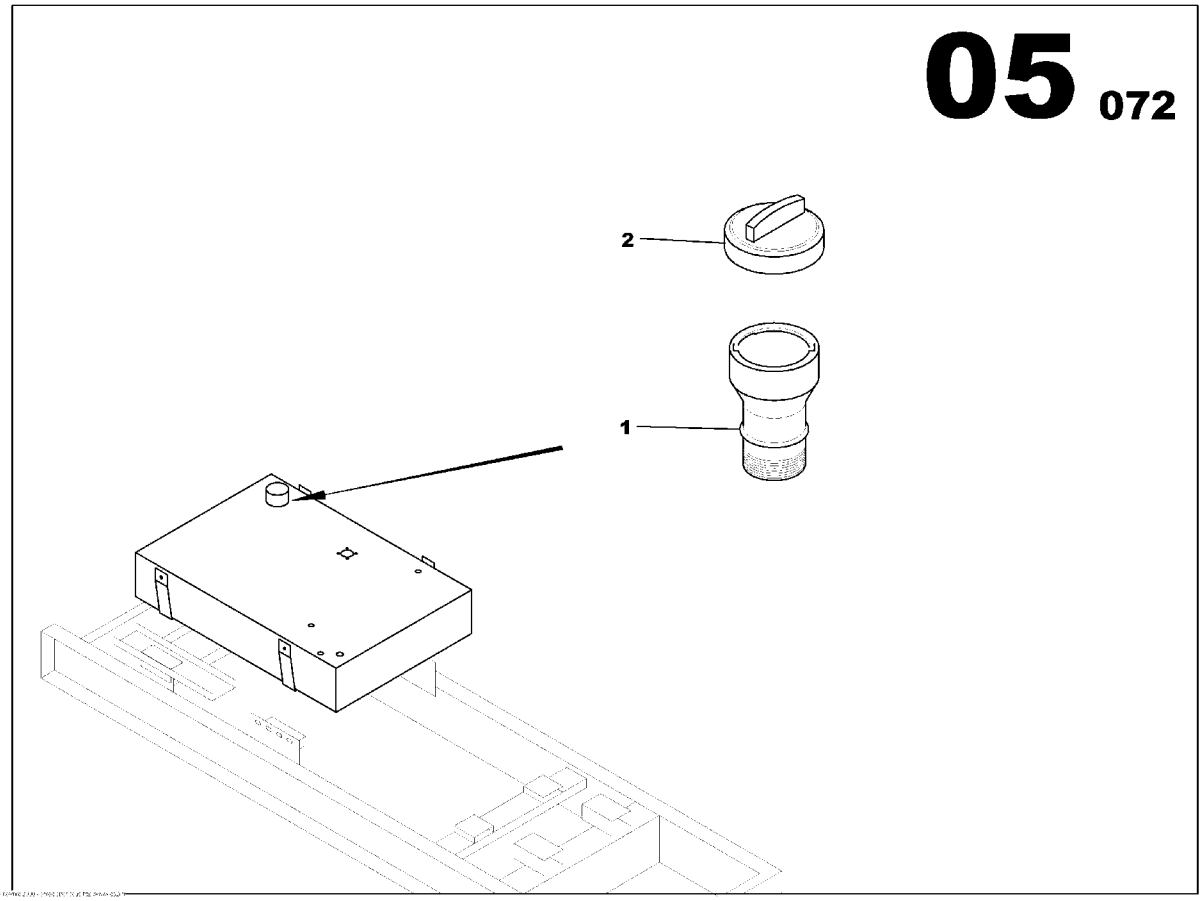

FUEL FILLING FUNNEL BASE TANK
85629541

Part numbers listed are only parts used in this model

Item	Part No.	Description	Qty	Un	From SN	To SN	Order PN	Page
1	85403517	FUEL FILLING FUNNEL BASE TANK	1	UN			85403517	
2	85509222	TANK CAP	1	UN			85509222	

COMBUSTIBLE VENT TANK ASSEMBLY

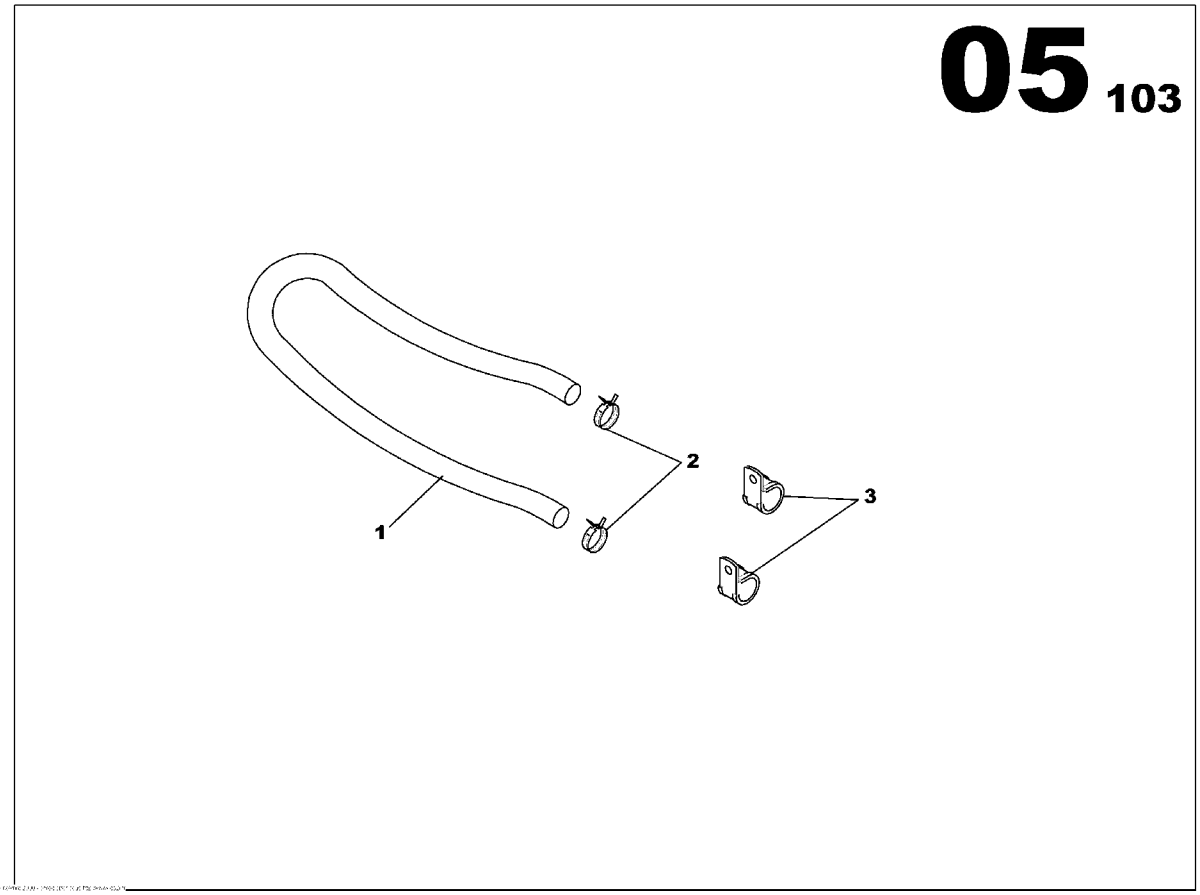

COMBUSTIBLE VENT TANK ASSEMBLY
17130196

Part numbers listed are only parts used in this model

Item	Part No.	Description	Qty	Un	From SN	To SN	Order PN	Page
1	85416436	FLEXIBLE HOSE D8x14	1	ML			85416436	
2	17130824	SPRING CLAMP D10/13	1	UN			17130824	
3	17130816	CLAMP D20	2	UN			17130816	

LEAKAGE DETECTION RETENTION BUND ASSEMBLY

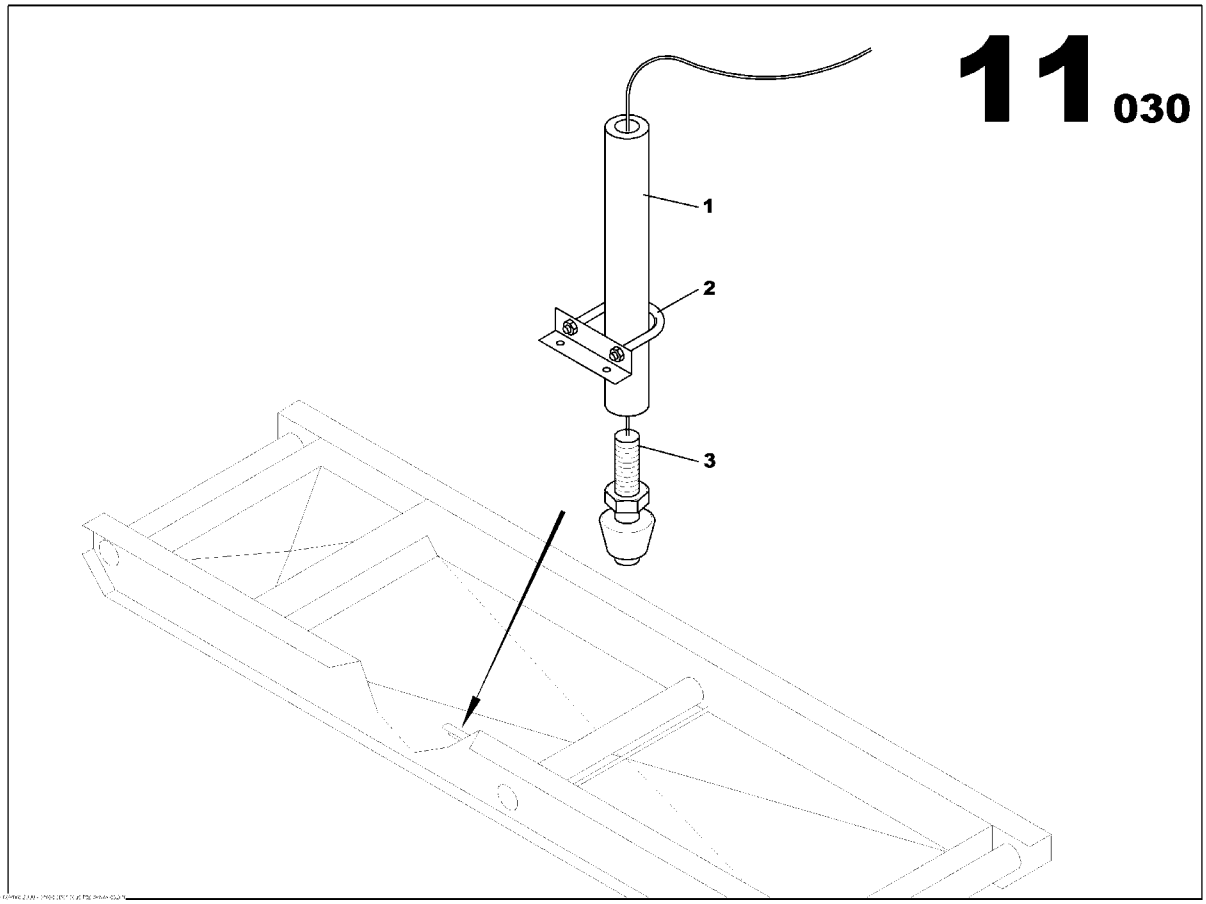

LEAKAGE DETECTION RETENTION BUND ASSEMBLY
17130279

Part numbers listed are only parts used in this model

Item	Part No.	Description	Qty	Un	From SN	To SN	Order PN	Page
1	17130428	DETECTION ESCAPE SWITCH BRACKET	1	UN			17130428	
2	85417772	HOSE CLAMP D17	1	UN			85417772	
3	85417459	LEVEL SWITCH	1	UN			85417459	

TANK GAUGE ASSEMBLY

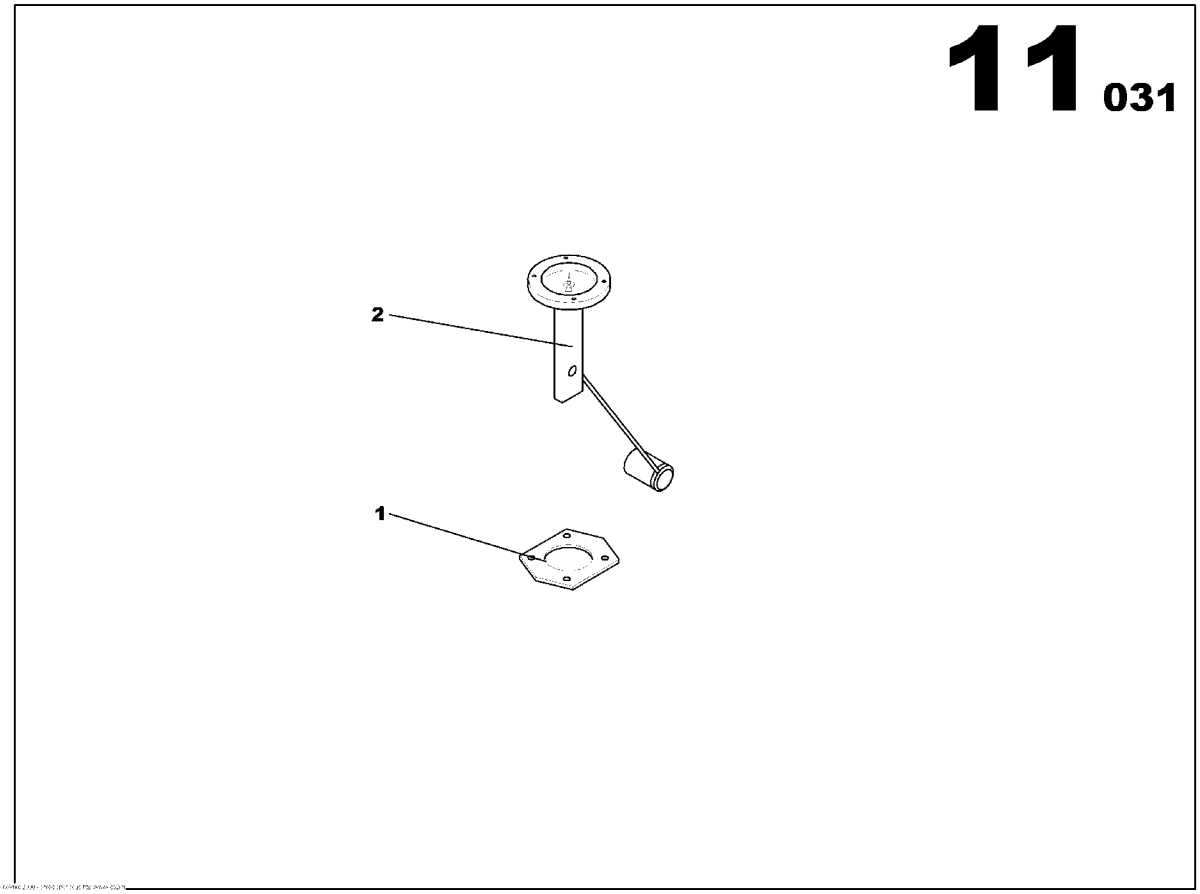

TANK GAUGE ASSEMBLY
17130287

Part numbers listed are only parts used in this model

Item	Part No.	Description	Qty	Un	From SN	To SN	Order PN	Page
1	85490811	SPECIAL FLANGE GASKET	1	UN			85490811	
2	17130295	BASE TANK FUEL GAUGE	1	UN			17130295	

STARTING FUNCTION

Non illustré
Not illustrated

STARTING FUNCTION

Part numbers listed are only parts used in this model

Item	Part No.	Description	Qty	Un	From SN	To SN	Order PN	Page
1		ELECTRIC STARTER ASSEMBLY	1	UN				65

ELECTRIC STARTER ASSEMBLY

Non illustré
Not illustrated

ELECTRIC STARTER ASSEMBLY

Part numbers listed are only parts used in this model

Item	Part No.	Description	Qty	Un	From SN	To SN	Order PN	Page
	17130238	ELECTRIC STARTER ASSEMBLY	1	UN			17130238	67

ELECTRIC STARTER ASSEMBLY

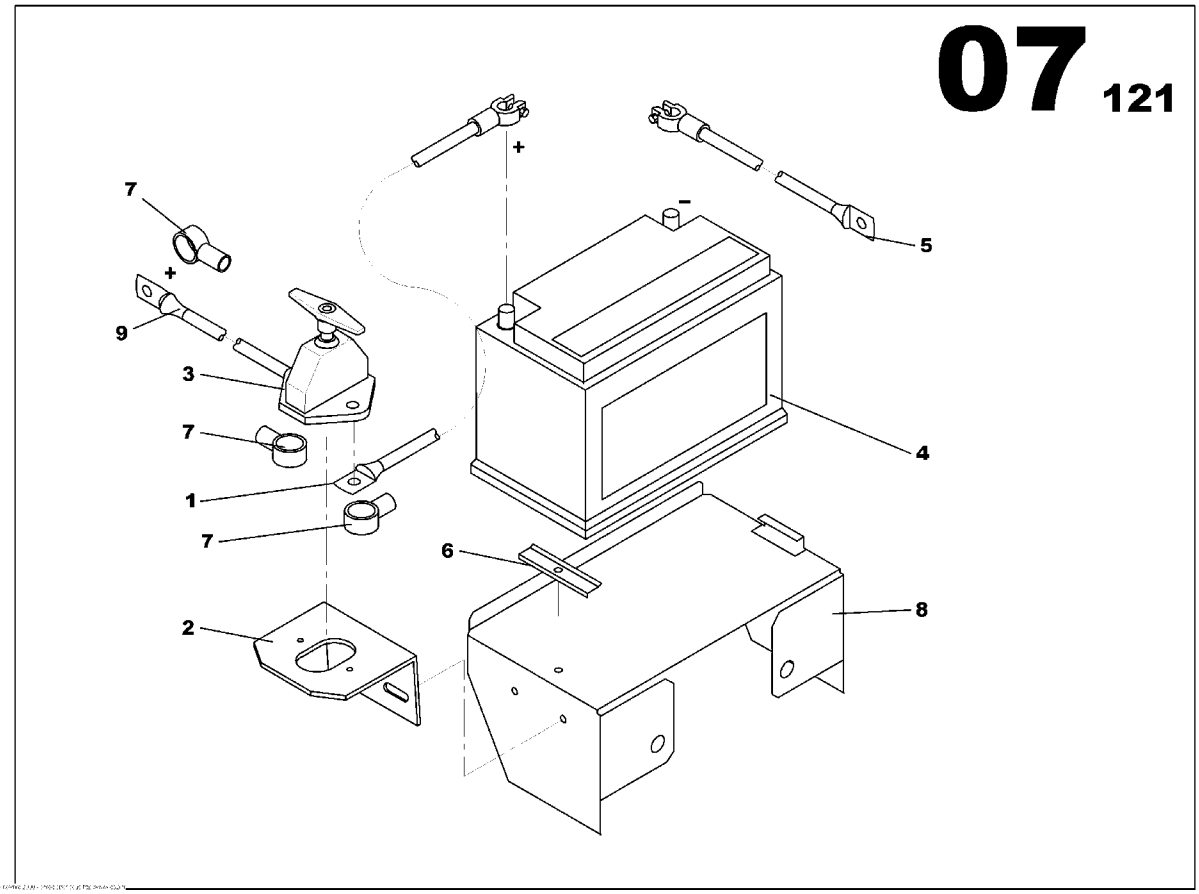

ELECTRIC STARTER ASSEMBLY
17130238

Part numbers listed are only parts used in this model

Item	Part No.	Description	Qty	Un	From SN	To SN	Order PN	Page
1	85634384	BATTERY CABLE 35mm2 L0900 RED	1	UN			85634384	
2	85403707	BATTERY ISOLATOR BRACKET	1	UN			85403707	
3	85403723	BATTERY ISOLATOR SWITCH	1	UN			85403723	
4	85403715	STARTING BATTERY 12V 70Ah 400A	1	UN			85403715	
5	85412625	BATTERY CABLE(-) 35mm2 L900 BLACK	1	UN			85412625	
6	85403699	BATTERY FIXING BRACKET	1	UN			85403699	
7	85502235	COWL	3	UN			85502235	
8	85633410	BATTERY SUPPORT BRACKET	1	UN			85633410	
9	85634376	BATTERY CABLE(+) 35mm2 L730 RED	1	UN			85634376	

EXHAUST FUNCTION

Non illustré
Not illustrated

EXHAUST FUNCTION

Part numbers listed are only parts used in this model

Item	Part No.	Description	Qty	Un	From SN	To SN	Order PN	Page
1	85414530	EXHAUST FITTING KIT M107 ASSEMBLY	1	UN			85414530	71
2	85414944	HOT SPOT GUARDS ASSEMBLY	1	UN			85414944	75

EXHAUST FITTING KIT M107 ASSEMBLY

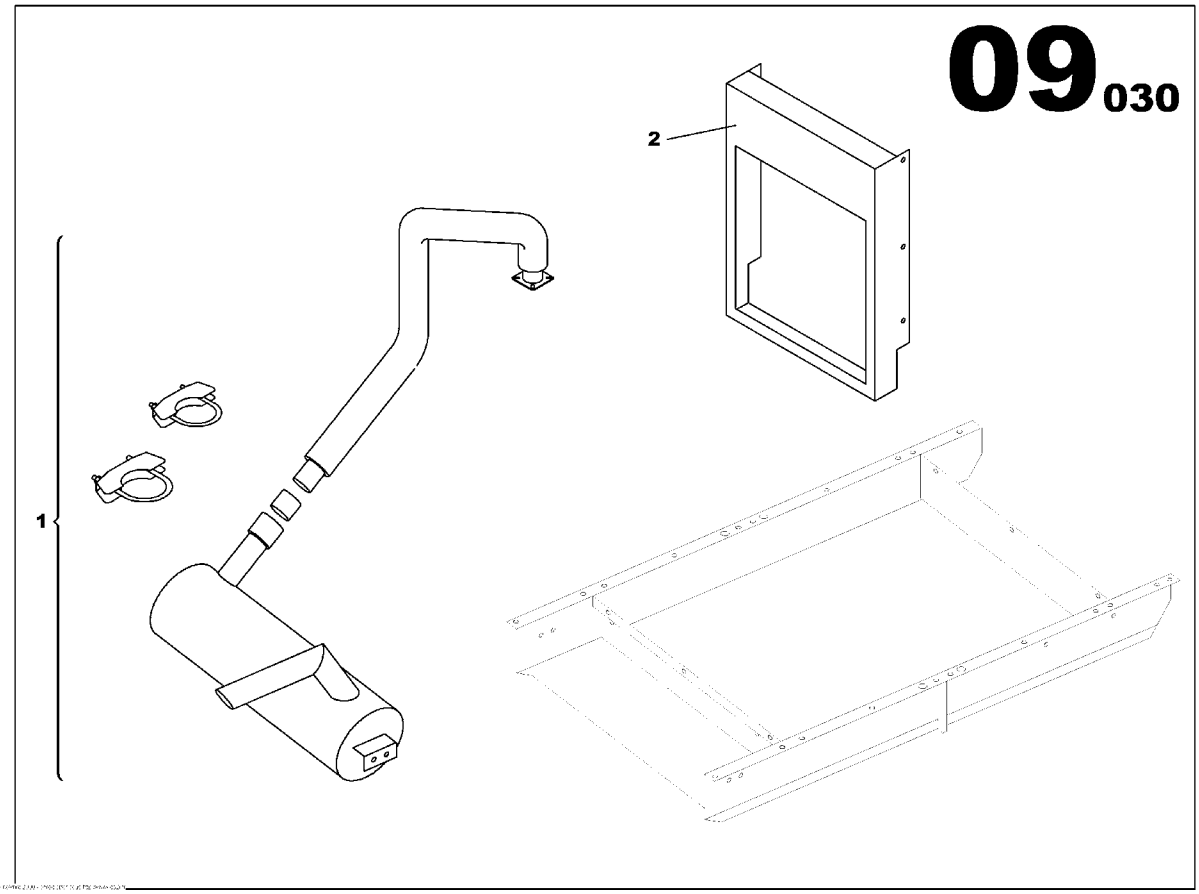

EXHAUST FITTING KIT M107 ASSEMBLY
85414530

Part numbers listed are only parts used in this model

Item	Part No.	Description	Qty	Un	From SN	To SN	Order PN	Page
1	85414563	EXHAUST MUFFLER M107 ASSEMBLY	1	UN			85414563	73
2	85632982	RADIATOR PANEL M107 MI S4L2	1	UN			85632982	

EXHAUST MUFFLER M107 ASSEMBLY

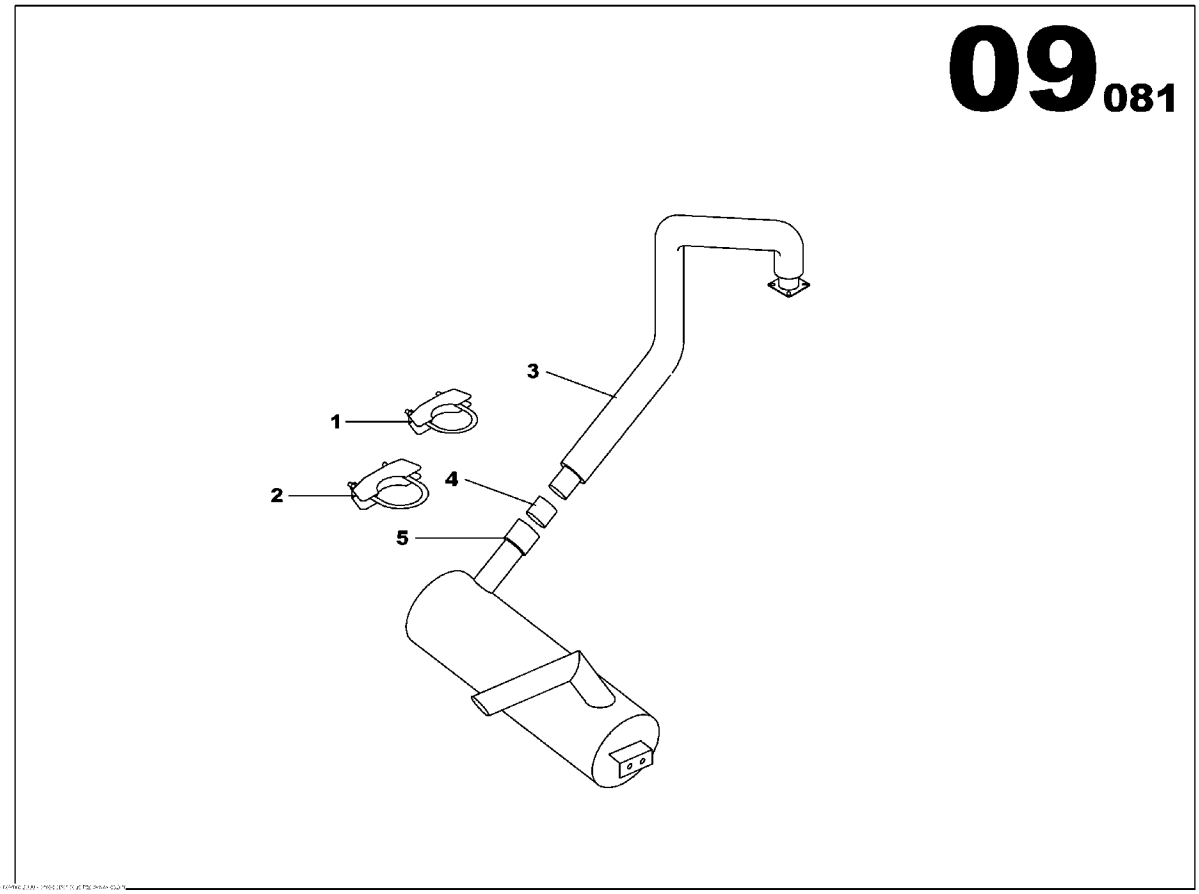

EXHAUST MUFFLER M107 ASSEMBLY
85414563

Part numbers listed are only parts used in this model

Item	Part No.	Description	Qty	Un	From SN	To SN	Order PN	Page
1	85490787	HOSE CLAMP D45	1	UN	03002053		85490787	
2	85429421	HOSE CLAMP D54	1	UN	03002053		85429421	
3	85413805	EXHAUST PIPE D40 MITSU	1	UN			85413805	
4	85496925	MUFFLER PIPE UNION REDUCER D50/D40	1	UN			85496925	
5	85633832	23dB MUFFLER	1	UN	03005015		85633832	

HOT SPOT GUARDS ASSEMBLY

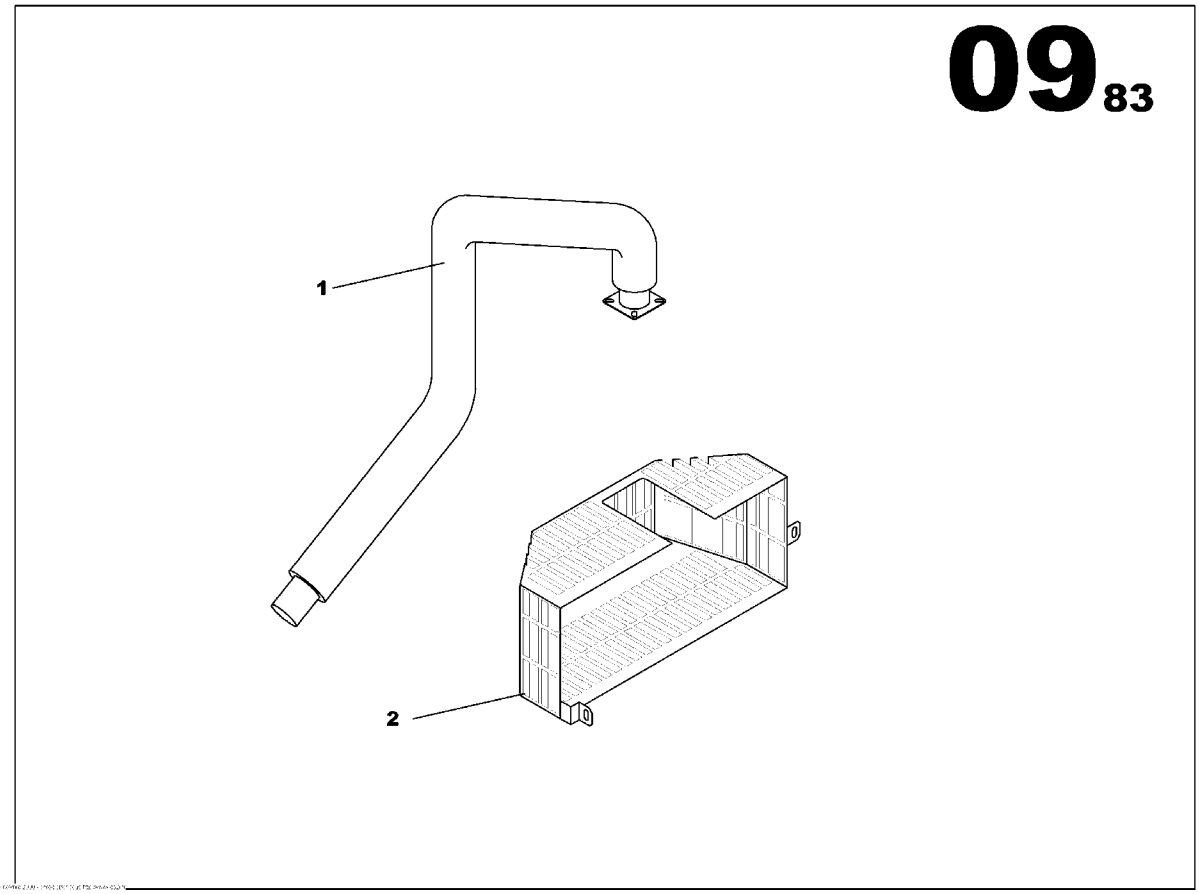

HOT SPOT GUARDS ASSEMBLY
85414944

Part numbers listed are only parts used in this model

Item	Part No.	Description	Qty	Un	From SN	To SN	Order PN	Page
1	85413854	EXHAUST PIPE D40 MITSU	1	UN			85413854	
2	85626893	HOT SPOT GUARDS ASSEMBLY	1	UN	01011032		85626893	77

HOT SPOT GUARDS ASSEMBLY

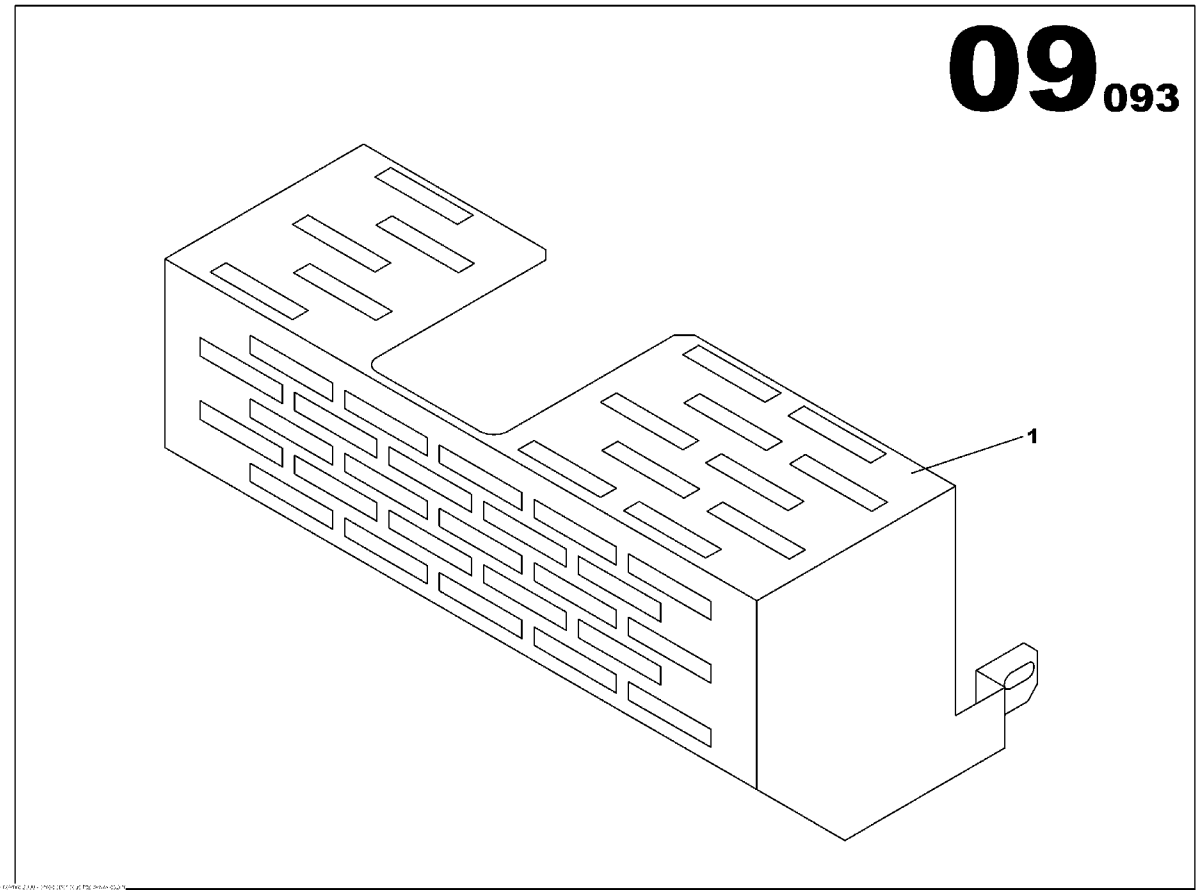

HOT SPOT GUARDS ASSEMBLY
85626893

Part numbers listed are only parts used in this model

Item	Part No.	Description	Qty	Un	From SN	To SN	Order PN	Page
1	85634079	HOT SPOT GUARD	1	UN			85634079	

FRAME FUNCTION

Non illustré
Not illustrated

FRAME FUNCTION

Part numbers listed are only parts used in this model

Item	Part No.	Description	Qty	Un	From SN	To SN	Order PN	Page
1		FRAME M107 ASSEMBLY	1	UN				81
2	85501377	G16 ACCESSORY ASSEMBLY	1	UN			85501377	85

FRAME M107 ASSEMBLY

Non illustré
Not illustrated

FRAME M107 ASSEMBLY

Part numbers listed are only parts used in this model

Item	Part No.	Description	Qty	Un	From SN	To SN	Order PN	Page
	17130329	FRAME M107 ASSEMBLY	1	UN			17130329	83

FRAME M107 ASSEMBLY

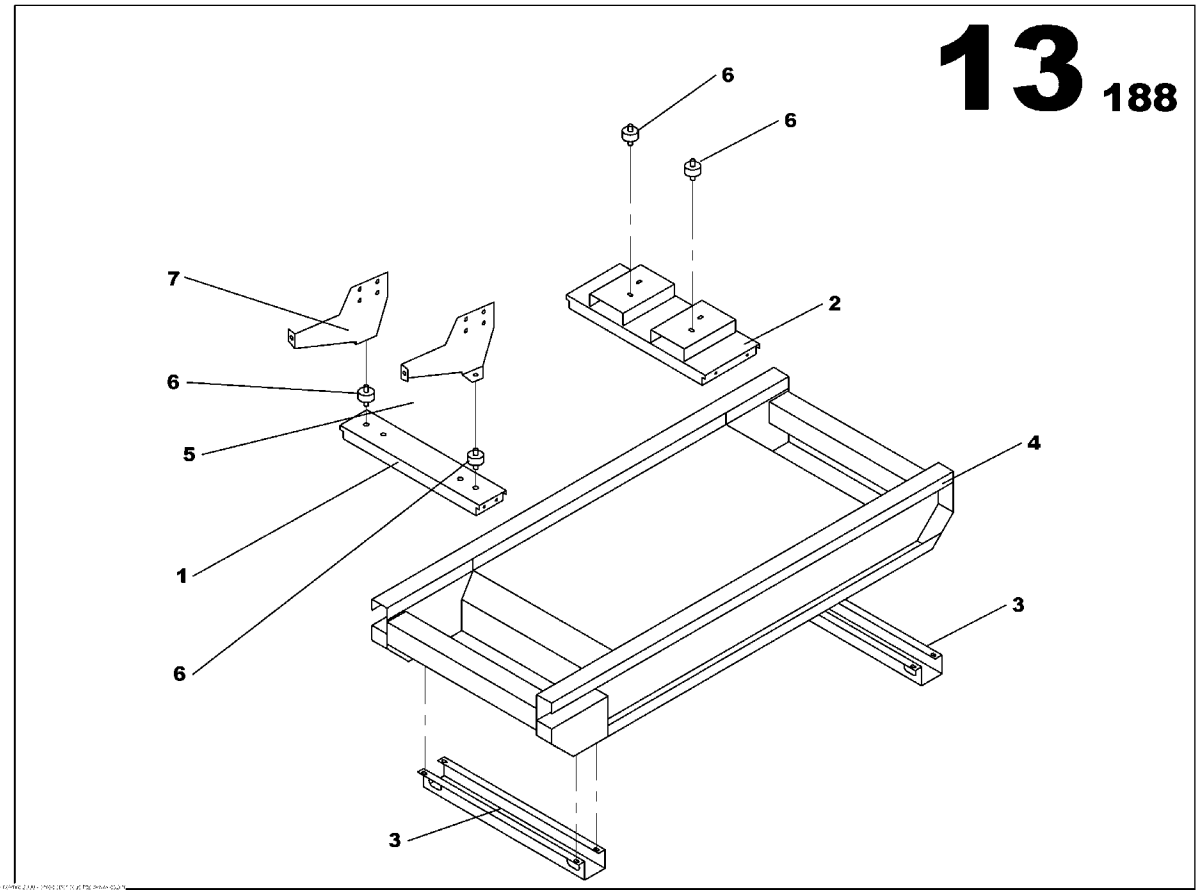

FRAME M107 ASSEMBLY
17130329

Part numbers listed are only parts used in this model

Item	Part No.	Description	Qty	Un	From SN	To SN	Order PN	Page
1	17130378	ENGINE TRAVERSE	1	UN			17130378	
2	17130386	ALTERNATOR TRAVERSE M107	1	UN			17130386	
3	17130394	FORK LIFT CHANNEL	2	UN			17130394	
4	17130303	FRAME M107	1	UN			17130303	
5	85416055	ENGINE SUPPORT MI S3L2/S4L2 LEFT SIDE	1	UN			85416055	
6	85415495	ANTI-VIBRATION MOUNT D60 Th35	4	UN			85415495	
7	85416063	ENGINE SUPPORT MI S3L2/S4L2 RIGHT SIDE	1	UN			85416063	

G16 ACCESSORY ASSEMBLY

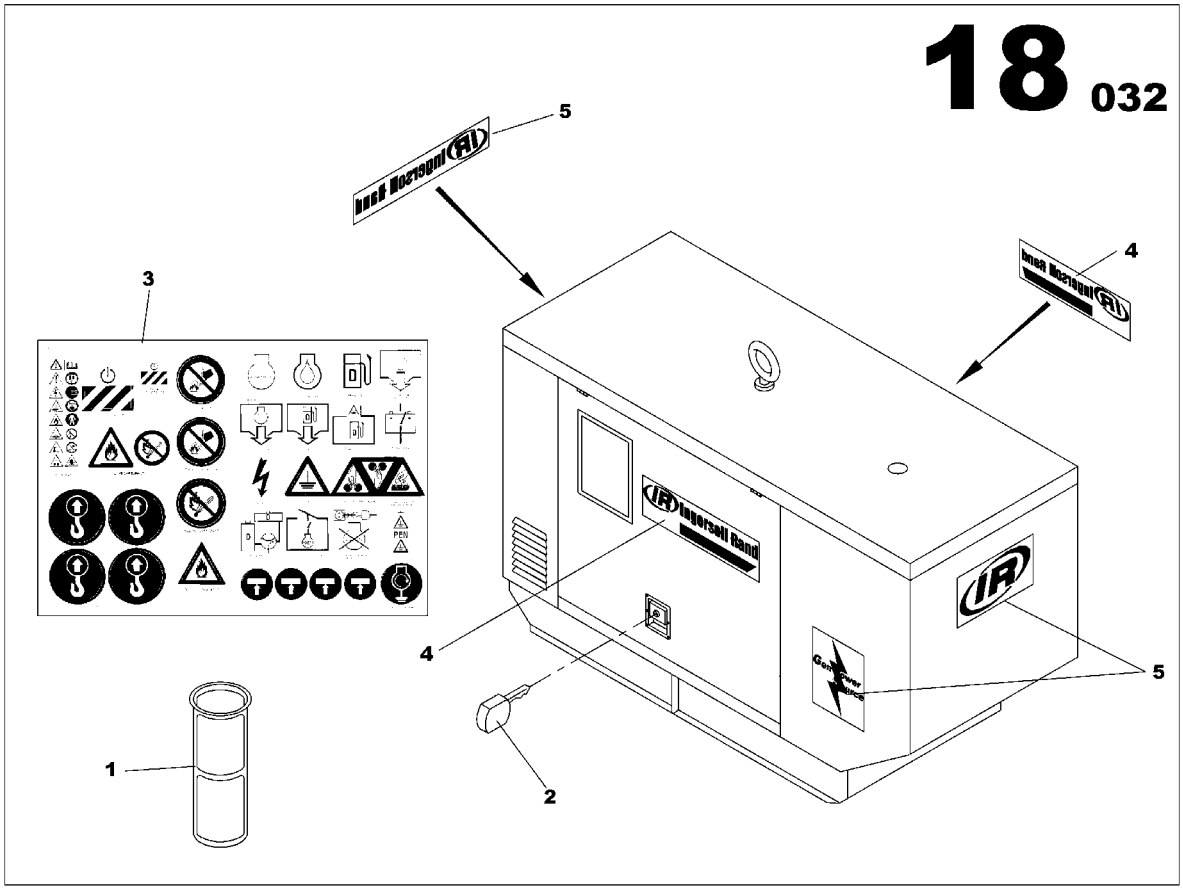

G16 ACCESSORY ASSEMBLY
85501377

Part numbers listed are only parts used in this model

Item	Part No.	Description	Qty	Un	From SN	To SN	Order PN	Page
1	85633386	FUEL FILTER	1	UN	03010525		85633386	
2	85509263	WBH LATCHE KEY	1	UN			85509263	
3	85506467	STICKER	1	UN			85506467	
4	85503746	STICKER G16	2	UN			85503746	
5	85636553	DECALS ASSEMBLY	1	UN			85636553	87

DECALS ASSEMBLY

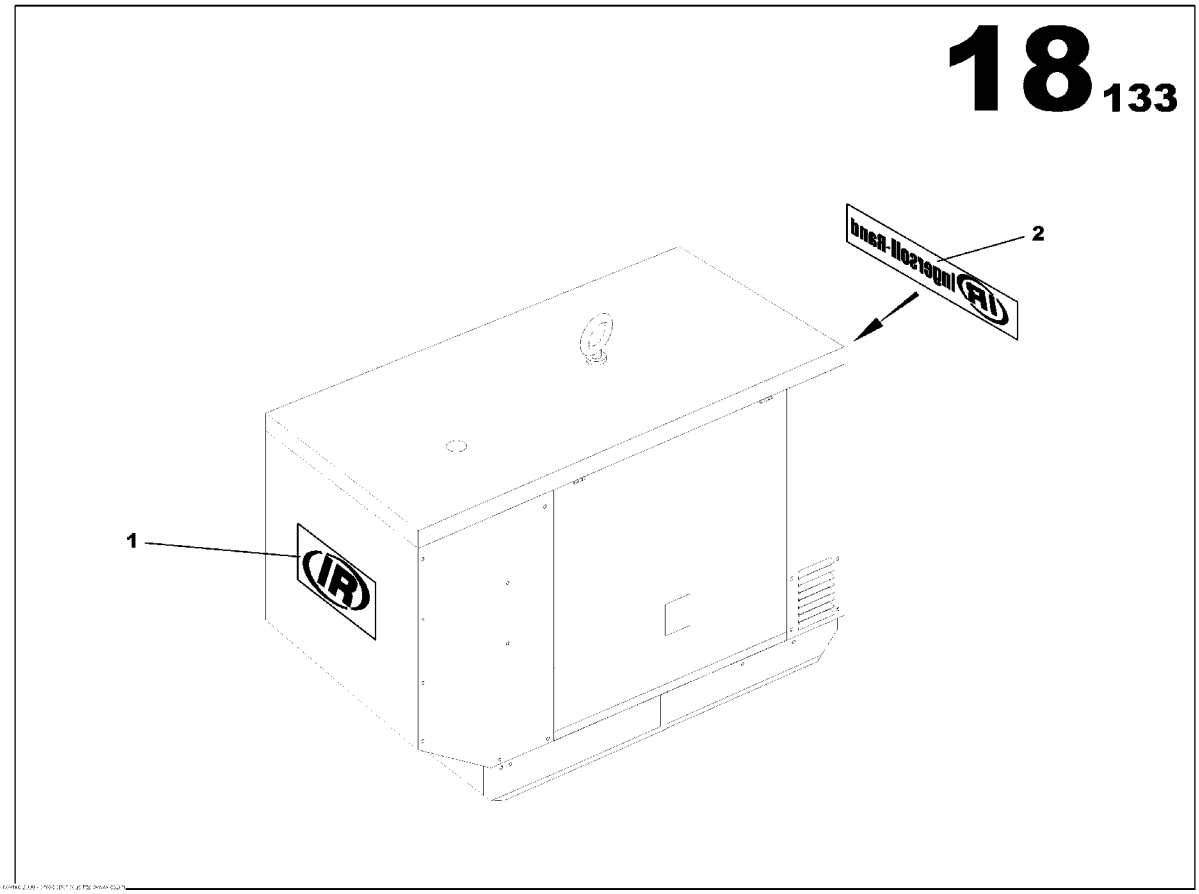

DECALS ASSEMBLY
85636553

Part numbers listed are only parts used in this model

Item	Part No.	Description	Qty	Un	From SN	To SN	Order PN	Page
1	85500197	STICKER IR	1	UN			85500197	
2	85500221	STICKER IR SYMBOL	1	UN			85500221	

CANOPY FONCTION

Non illustré
Not illustrated

CANOPY FONCTION

Part numbers listed are only parts used in this model

Item	Part No.	Description	Qty	Un	From SN	To SN	Order PN	Page
1	85634202	CANOPY M107 ASSEMBLY	1	UN			85634202	91
2	85491991	EMERGENCY STOP PANEL ASSEMBLY	1	UN			85491991	101
3	85634640	EMERGENCY STOP PANEL ASSEMBLY	1	UN			85634640	103
4	85638914	EARTH ROD WITH CABLE CANOPY ASSEMBLY	1	UN			85638914	109

CANOPY M107 ASSEMBLY

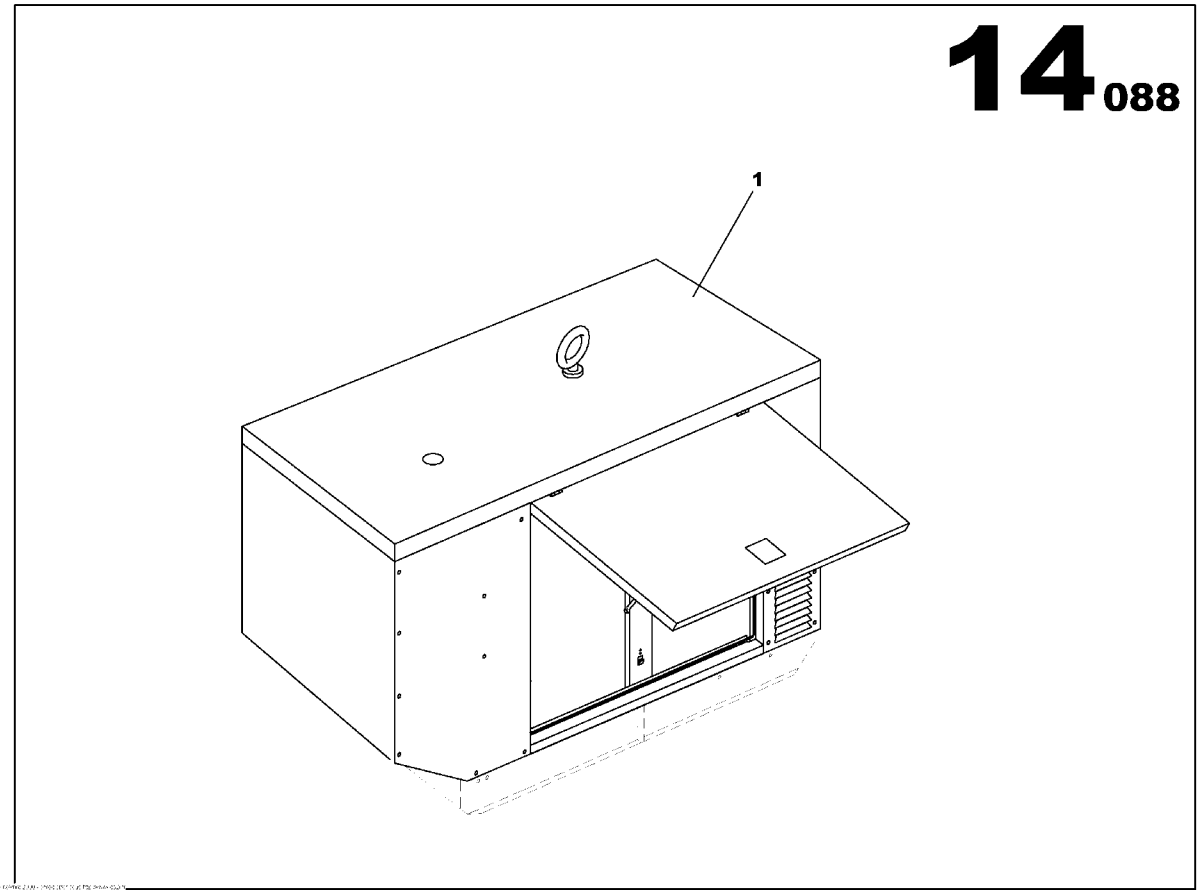

CANOPY M107 ASSEMBLY
85634202

Part numbers listed are only parts used in this model

Item	Part No.	Description	Qty	Un	From SN	To SN	Order PN	Page
1	85634194	CANOPY M107 ASSEMBLY	1	UN			85634194	93

CANOPY M107 ASSEMBLY

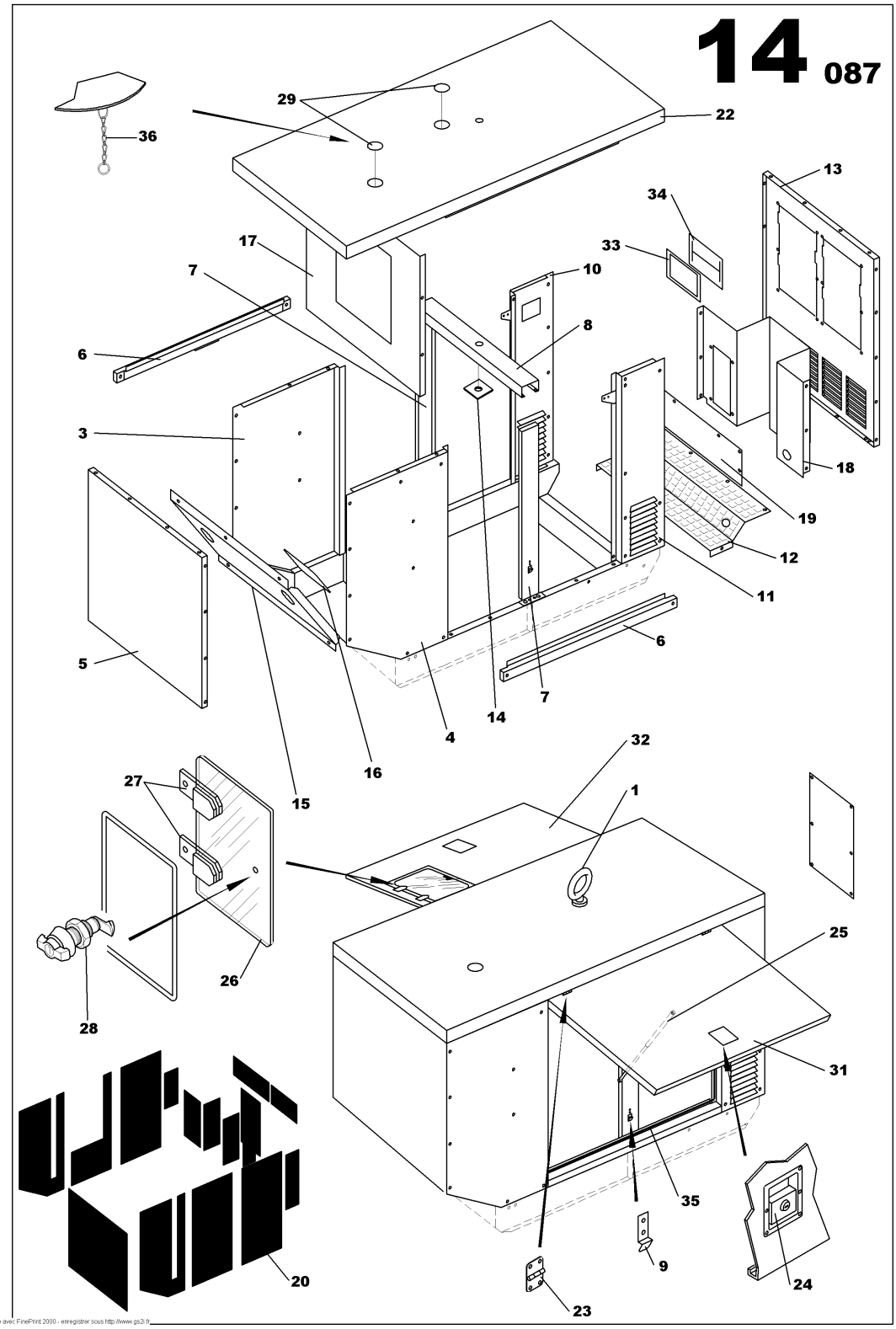

Imprimé avec FinePrint 2000 - enregistrer sous http://www.gs2i.fr

CANOPY M107 ASSEMBLY
85634194

Part numbers listed are only parts used in this model

Item	Part No.	Description	Qty	Un	From SN	To SN	Order PN	Page
1	85492700	LIFTING EYE D58	1	UN			85492700	
3	85415354	M107 CANOPY RIGHT HEAD PANEL	1	UN			85415354	
4	85415362	M107 CANOPY LEFT HEAD PANEL	1	UN			85415362	
5	85415347	M107 CANOPY HEAD PANEL	1	UN			85415347	
6	85415370	CANOPY SIDE PANEL M107	2	UN			85415370	
7	85412484	SIDE SUPPORT ARCH UPRIGHTS M107	2	UN			85412484	
8	85412492	TRANSVERSE ARCH SUPPORT M107	1	UN			85412492	
9	85413516	STRIKER PLATE M107 CANOPY DOOR	2	UN			85413516	
10	85497410	M107 CANOPY RIGHT REAR PANEL	1	UN			85497410	
11	85497428	M107 CANOPY LEFT REAR PANEL	1	UN			85497428	
12	85497436	REAR AIR INTAKE LOUVER M107 CANOPY	1	UN			85497436	
13	85415313	M107 CANOPY REAR PANEL	1	UN			85415313	
14	85509594	SUPPORT ARCH BRACKET PANEL	1	UN			85509594	
15	85509560	RADIATOR BLACK PANEL M107	1	UN			85509560	
16	85509578	RADIATOR BLACK PANEL M107	1	UN			85509578	
17	85509586	RADIATOR PANEL M107 JD 3039D	1	UN			85509586	
18	85633048	AIR DEFLECTOR	1	UN			85633048	
19	85633055	AIR DEFLECTOR	1	UN			85633055	
20	85633063	SOUNDPROOF PANELS BATCH M107	1	UN			85633063	
22	85634319	CANOPY TOP M107	1	UN			85634319	
23	85406130	DOOR HINGE	4	UN			85406130	
24	85509305	CANOPY DOOR LOCK KEY LOCK	2	UN			85509305	
25	85416477	GAS FILLED DAMPER 70kg ROD D10	2	UN			85416477	
26	85416501	SECURITY WINDOW M107	1	UN			85416501	
27	85412831	DOOR HINGE	2	UN			85412831	
28	85402907	SLAM SHUT ASSEMBLY	1	UN			85402907	97
29	85621142	FLAP D160	2	UN			85621142	
31	85509859	CANOPY DOOR M107 LEFT	1	UN			85509859	

CANOPY M107 ASSEMBLY

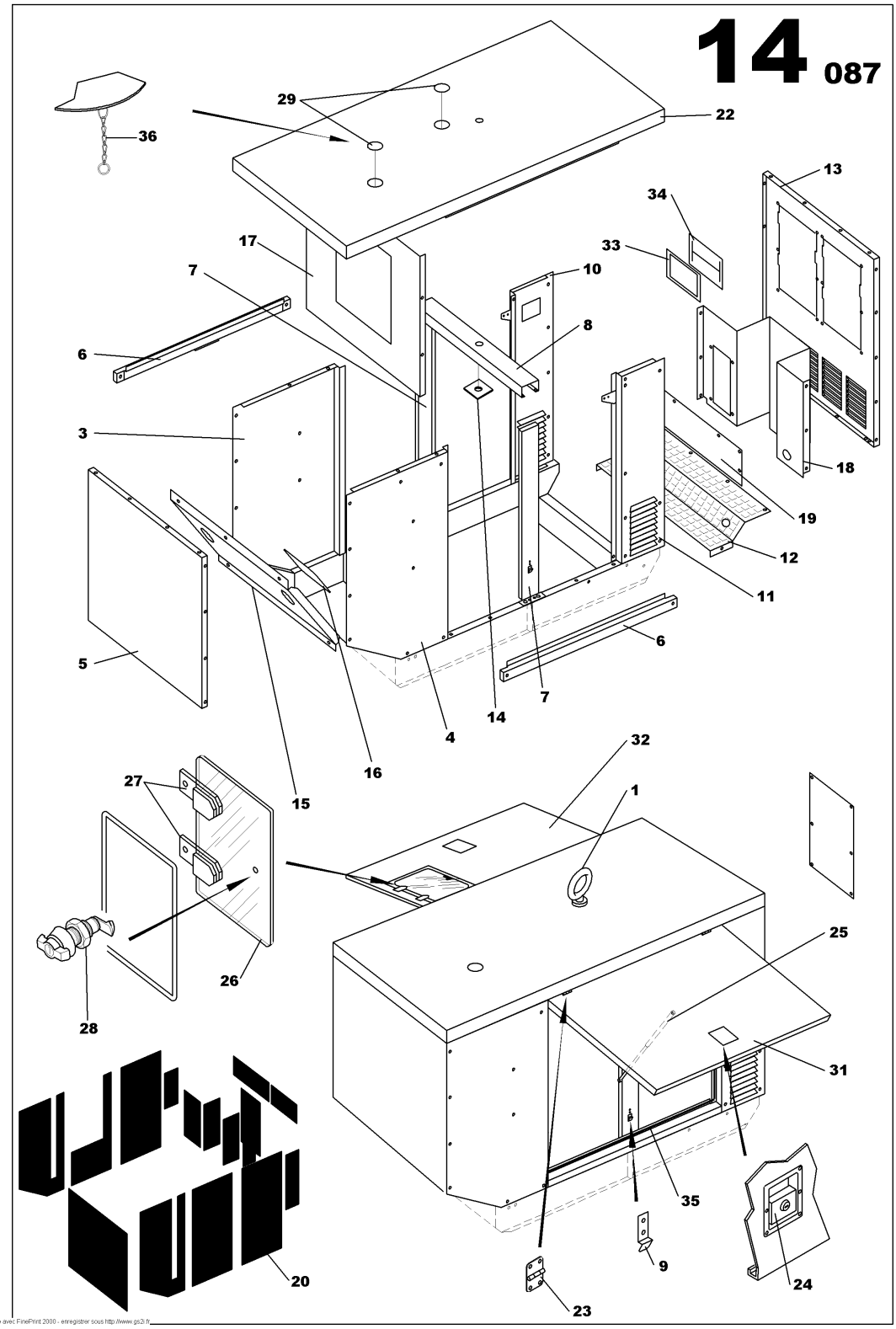

CANOPY M107 ASSEMBLY
85634194

Part numbers listed are only parts used in this model

Item	Part No.	Description	Qty	Un	From SN	To SN	Order PN	Page
32	85509842	CANOPY DOOR M107 RIGHT	1	UN			85509842	
33	85634939	WIRE BIB OUTPUT BRACKET M107	1	UN			85634939	
34	85621191	CABLE OUTPUT RUBBER SCREEN	1	UN			85621191	
35	85413722	LINEAR SEAL	8.3	ML			85413722	
36	85632016	CHAIN	2	UN			85632016	

SLAM SHUT ASSEMBLY

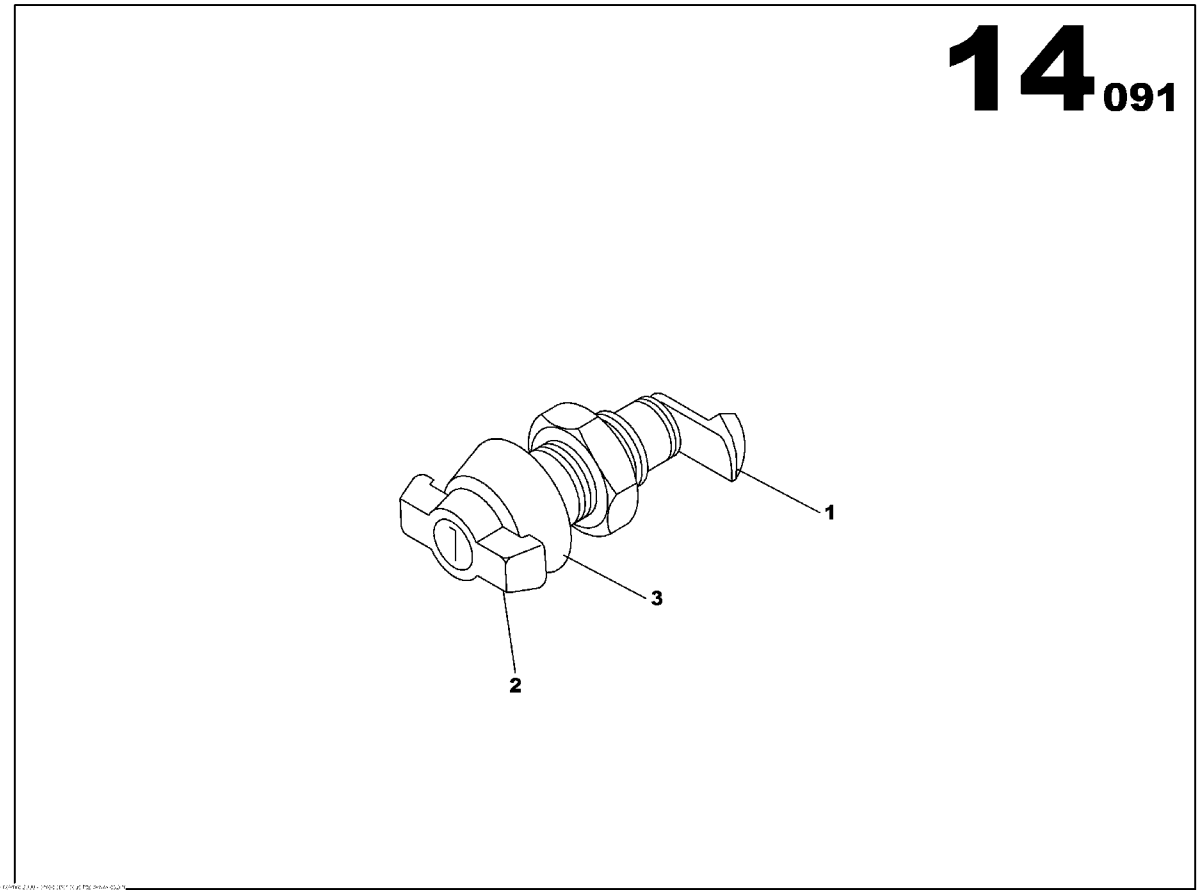

SLAM SHUT ASSEMBLY
85402907

Part numbers listed are only parts used in this model

Item	Part No.	Description	Qty	Un	From SN	To SN	Order PN	Page
1	85406221	SLAM SHUT DOOR LATCH	1	UN			85406221	
2	85406239	SLAM SHUT LATCH HANDLE	1	UN			85406239	99
3	85406247	SLAM SHUT FASTENER	1	UN			85406247	

SLAM SHUT LATCH HANDLE

Non illustré
Not illustrated

SLAM SHUT LATCH HANDLE
85406239

Part numbers listed are only parts used in this model

Item	Part No.	Description	Qty	Un	From SN	To SN	Order PN	Page
1	85632883	WBH LATCHE KEY	1	UN			85632883	

EMERGENCY STOP PANEL ASSEMBLY

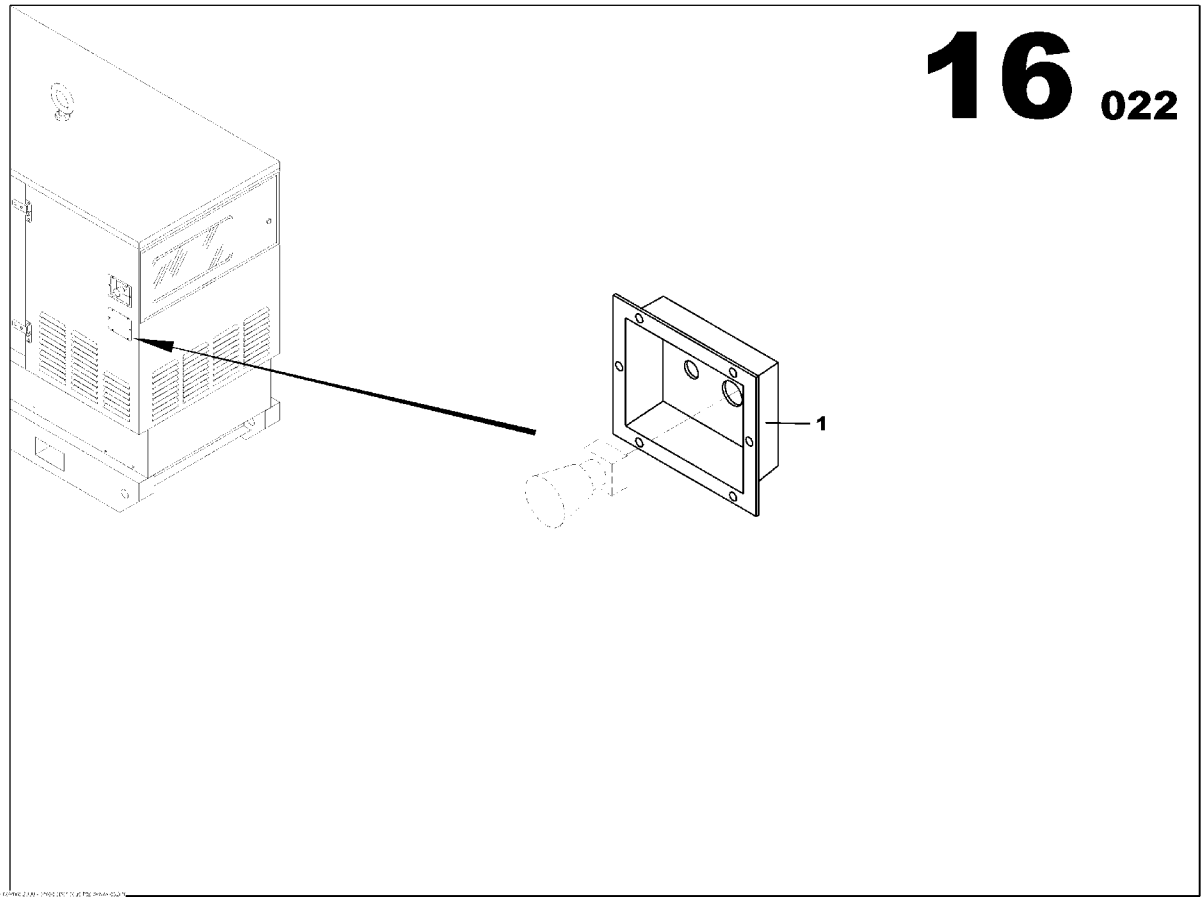

EMERGENCY STOP PANEL ASSEMBLY
85491991

Part numbers listed are only parts used in this model

Item	Part No.	Description	Qty	Un	From SN	To SN	Order PN	Page
1	85407294	EMERGENCY STOP PANEL	1	UN			85407294	

EMERGENCY STOP PANEL ASSEMBLY

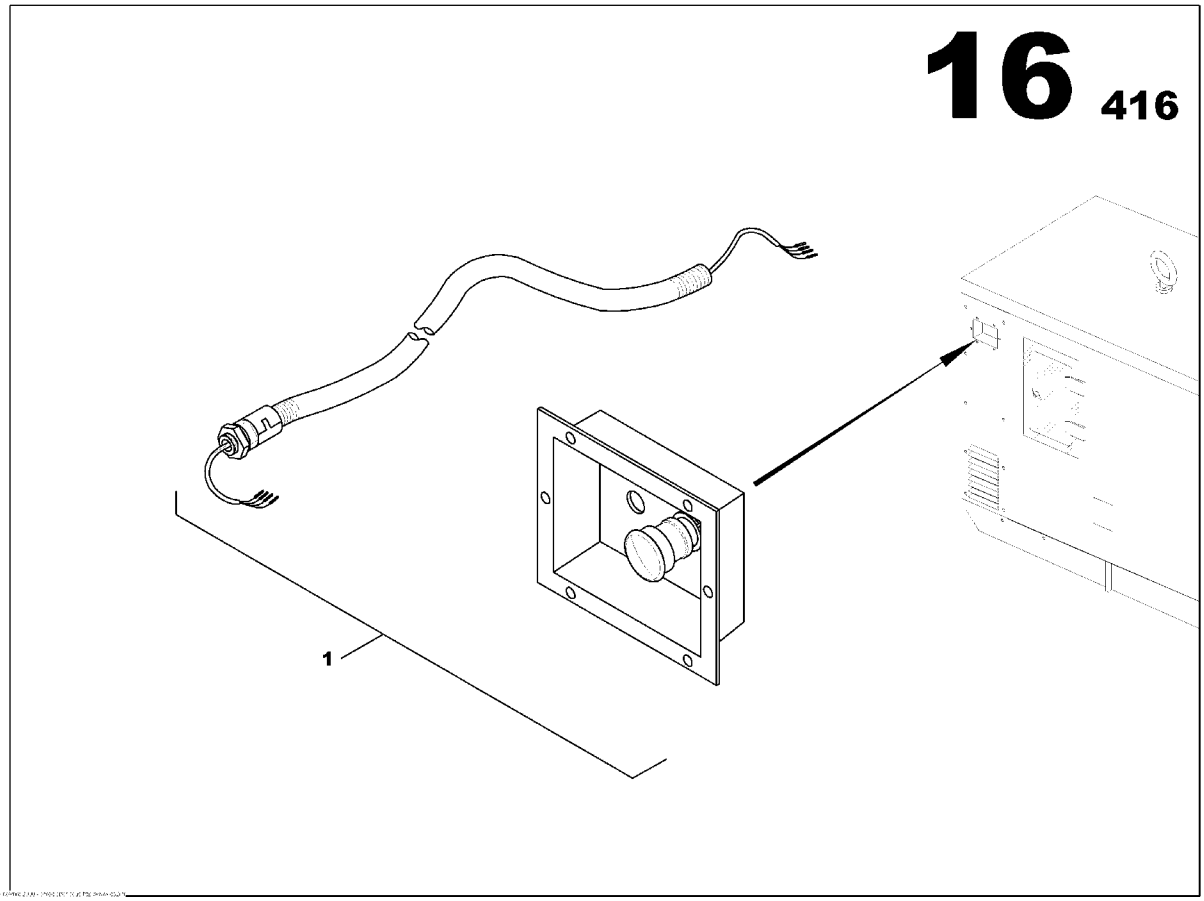

EMERGENCY STOP PANEL ASSEMBLY
85634640

Part numbers listed are only parts used in this model

Item	Part No.	Description	Qty	Un	From SN	To SN	Order PN	Page
1	85634657	EMERGENCY STOP PANEL ASSEMBLY	1	UN			85634657	105

EMERGENCY STOP PANEL ASSEMBLY

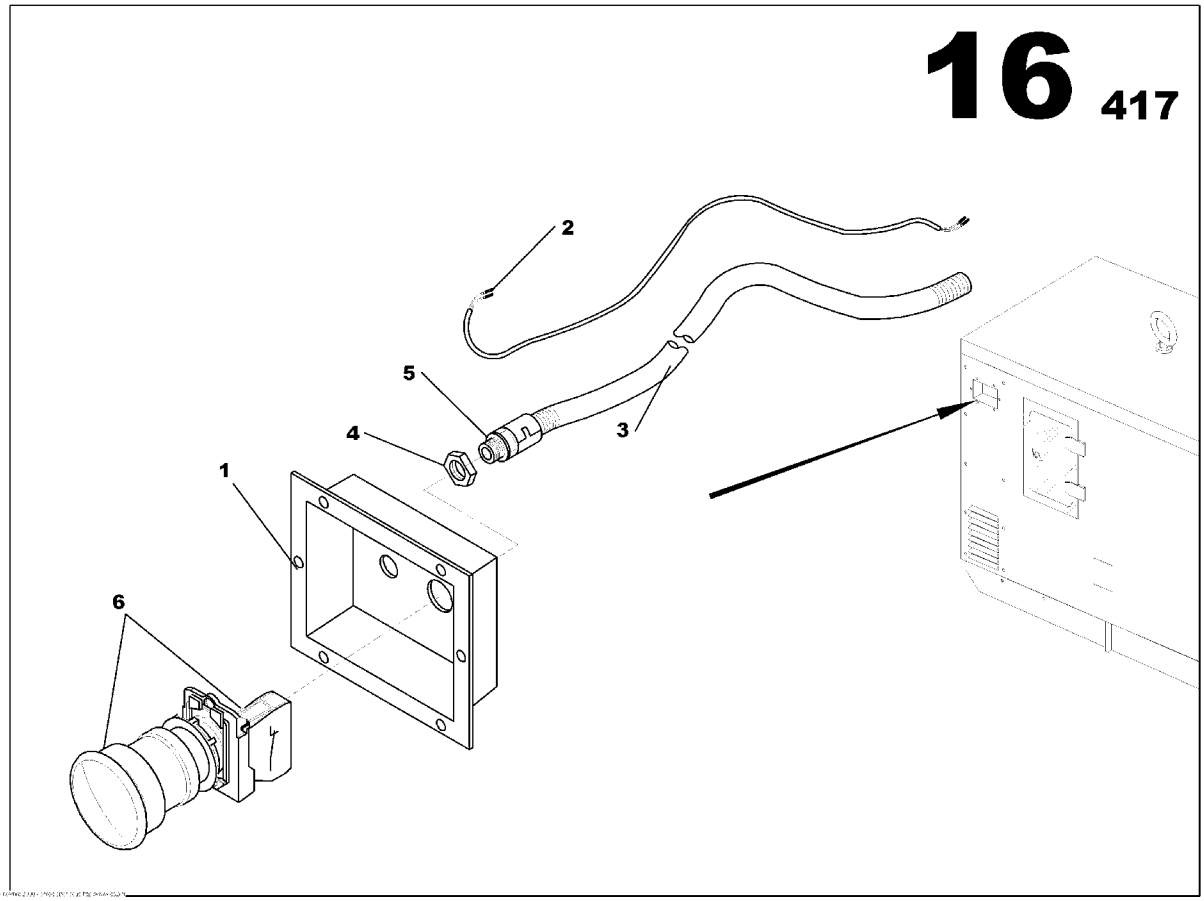

EMERGENCY STOP PANEL ASSEMBLY
85634657

Part numbers listed are only parts used in this model

Item	Part No.	Description	Qty	Un	From SN	To SN	Order PN	Page
1	85407294	EMERGENCY STOP PANEL	1	UN			85407294	
2	85635175	EMERGENCY STOP WIRING LOOM	1	UN			85635175	
3	85635241	ELECTRICAL SHAFT D09	1.2	ML			85635241	
4	85506061	GLAND NUT SCREW PG9	1	UN			85506061	
5	85499663	PIPE UNION PG9	1	UN			85499663	
6	85632370	EMRGENCY STOP BUTTON ASSEMBLY	1	UN			85632370	107

EMRGENCY STOP BUTTON ASSEMBLY

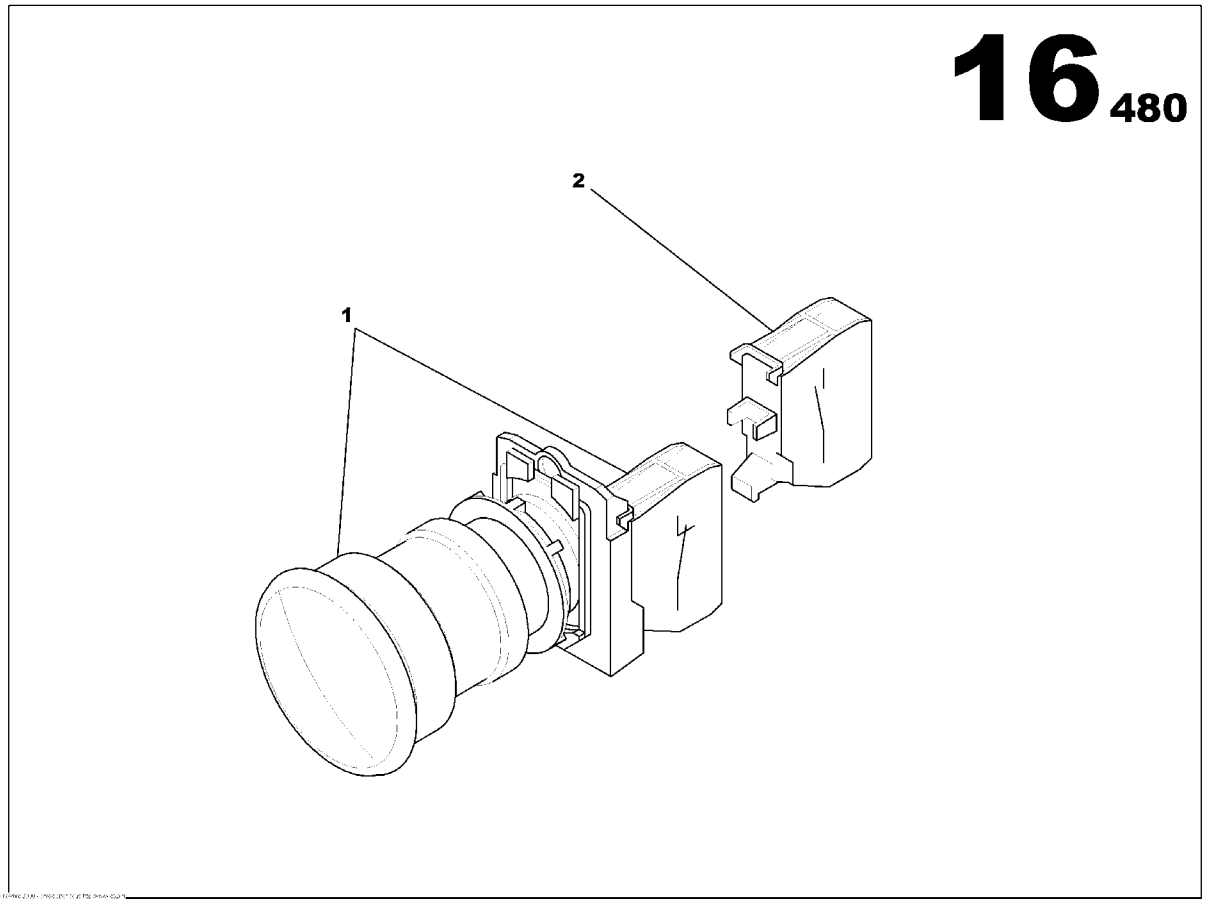

EMRGENCY STOP BUTTON ASSEMBLY
85632370

Part numbers listed are only parts used in this model

Item	Part No.	Description	Qty	Un	From SN	To SN	Order PN	Page
1	85631422	EMERGENCY STOP BUTTON	1	UN			85631422	
2	85632362	AUXILARY CONTACT NO	1	UN			85632362	

EARTH ROD WITH CABLE CANOPY ASSEMBLY

EARTH ROD WITH CABLE CANOPY ASSEMBLY
85638914

Part numbers listed are only parts used in this model

Item	Part No.	Description	Qty	Un	From SN	To SN	Order PN	Page
1	85639391	SCREWS ASSEMBLY	1	UN			85639391	111
2	85639086	EARTH ROD BRACKET	1	UN			85639086	
3	85408334	EARTH ROD L1000	1	UN			85408334	
4	85408227	NEUTRAL/EARTH SYSTEM CABLE 25mm2 L10000 Gr/Ye	1	UN			85408227	

SCREWS ASSEMBLY

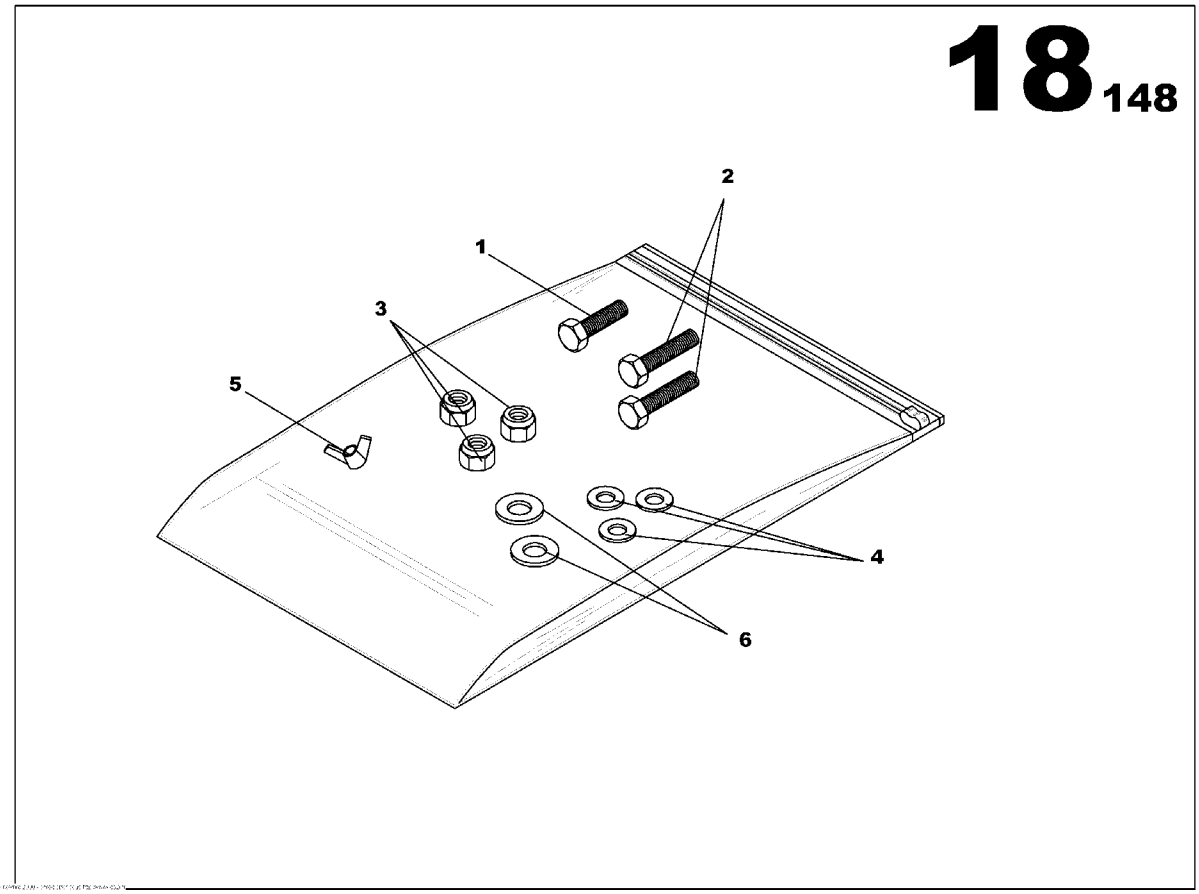

SCREWS ASSEMBLY
85639391

Part numbers listed are only parts used in this model

Item	Part No.	Description	Qty	Un	From SN	To SN	Order PN	Page
1	85626356	SCREW H M6x35	1	UN			85626356	
2	85639326	SCREW H M6x40	2	UN			85639326	
3	85507911	NUT M6	3	UN			85507911	
4	85507929	WASHER M6	3	UN			85507929	
5	85410157	WING NUT M6	1	UN			85410157	
6	85429793	WASHER 6x14	2	UN			85429793	

ELECTRICAL FUNCTION

Non illustré
Not illustrated

ELECTRICAL FUNCTION

Part numbers listed are only parts used in this model

Item	Part No.	Description	Qty	Un	From SN	To SN	Order PN	Page
1	85634780	CIRCUIT BREAKER PROTECTION PANEL OPTION	1	UN			85634780	115
2		CONTROL PANEL FONCTION	1	UN				117
3		ELECTRIC SUPPLY FUNCTION	1	UN				133

CIRCUIT BREAKER PROTECTION PANEL OPTION

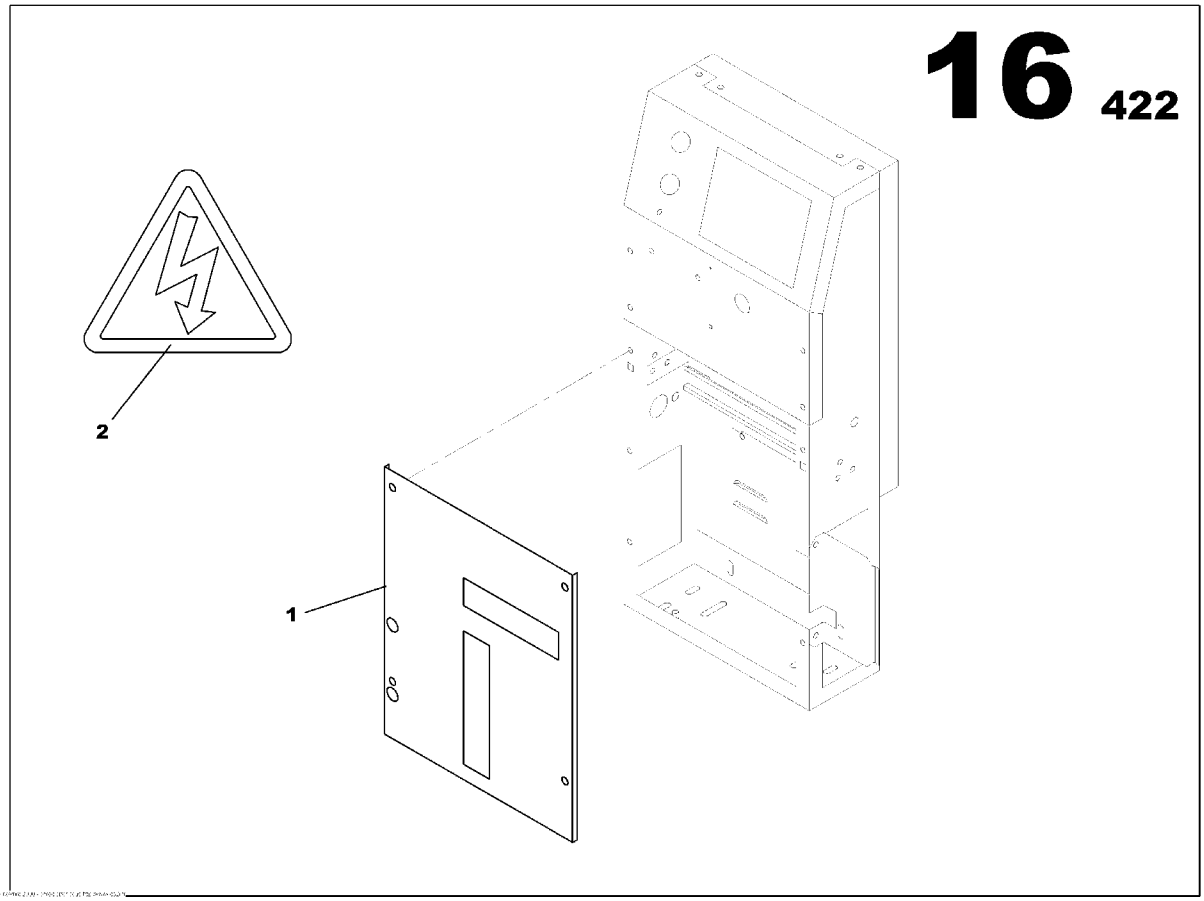

CIRCUIT BREAKER PROTECTION PANEL OPTION
85634780

Part numbers listed are only parts used in this model

Item	Part No.	Description	Qty	Un	From SN	To SN	Order PN	Page
1	85634723	CIRCUIT BREAKER CONTROL PANEL S2500 CONTROL PANEL	1	UN			85634723	
2	85409175	STICKER ELECTRIC DANGER SYMBOL	1	UN			85409175	

CONTROL PANEL FONCTION

Non illustré
Not illustrated

CONTROL PANEL FONCTION

Part numbers listed are only parts used in this model

Item	Part No.	Description	Qty	Un	From SN	To SN	Order PN	Page
1	85636280	STANDARD DASHBOARD M150 IR ASSEMBLY	1	UN			85636280	119
2	17130758	PGS REGLAGE OPTION	1	UN			17130758	

STANDARD DASHBOARD M150 IR ASSEMBLY

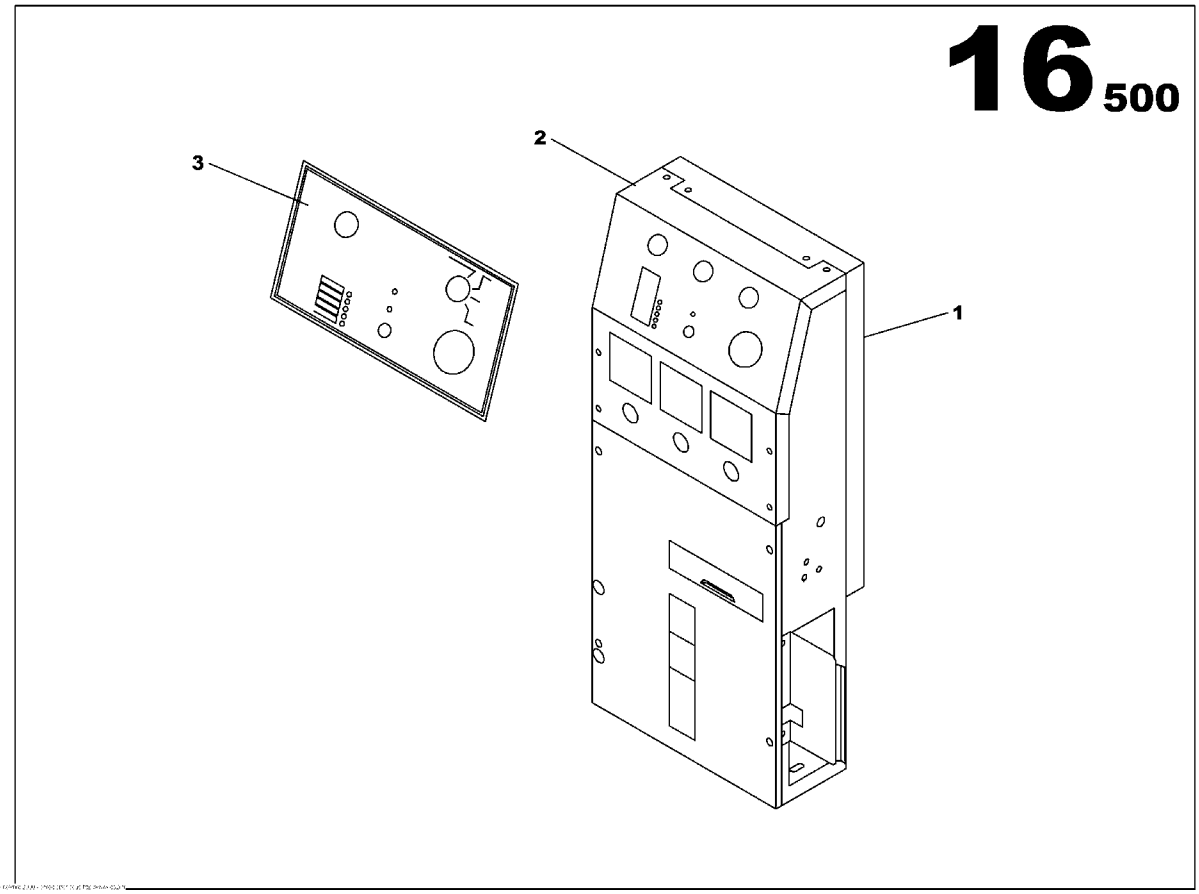

STANDARD DASHBOARD M150 IR ASSEMBLY
85636280

Part numbers listed are only parts used in this model

Item	Part No.	Description	Qty	Un	From SN	To SN	Order PN	Page
1	85634731	CONTROL PANEL SHEET METAL ASSEMBLY	1	UN			85634731	121
2	85636314	CONTROL PANEL ASSEMBLY	1	UN			85636314	123
3	85505634	PLASTIC PLATE L2450xh140	1	UN			85505634	

CONTROL PANEL SHEET METAL ASSEMBLY

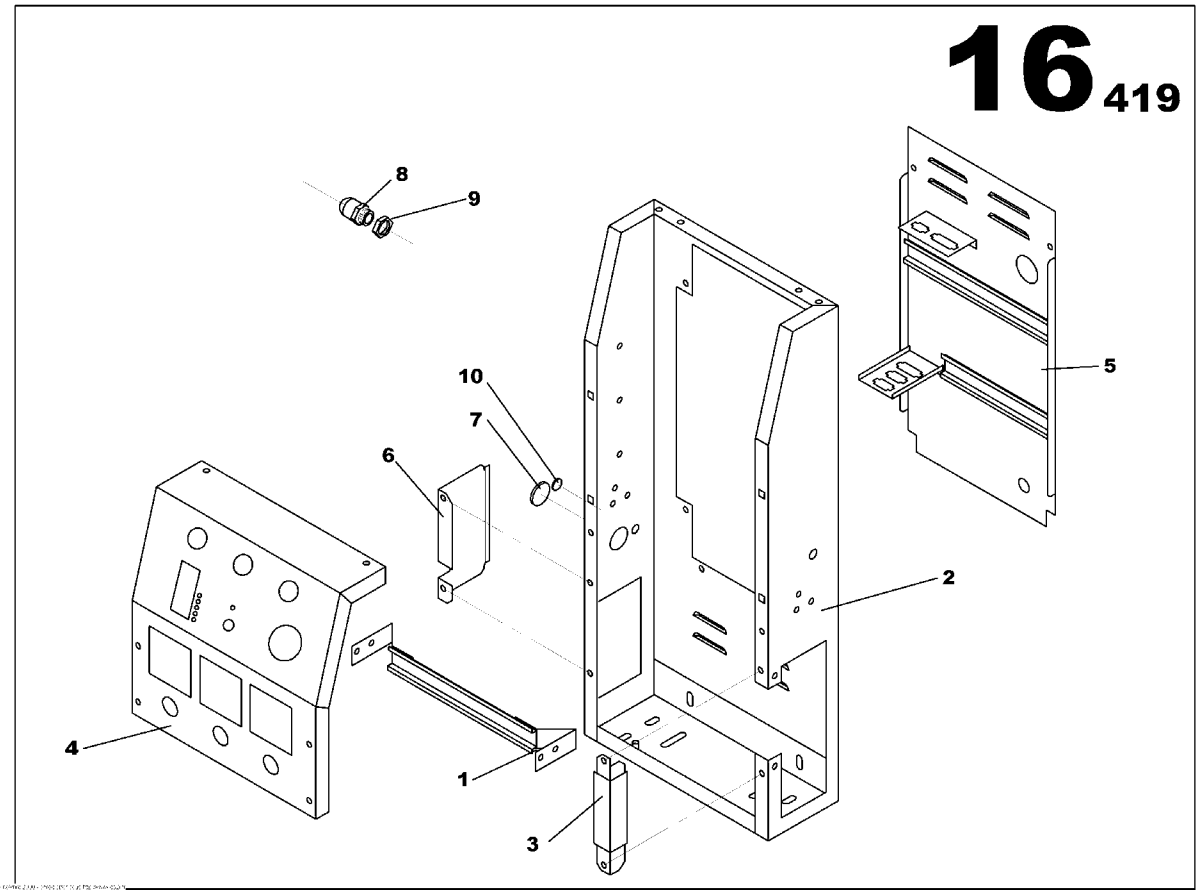

CONTROL PANEL SHEET METAL ASSEMBLY
85634731

Part numbers listed are only parts used in this model

Item	Part No.	Description	Qty	Un	From SN	To SN	Order PN	Page
1	85634632	ELECTRIC DIN RAIL	1	UN			85634632	
2	85634665	CONTROL PANEL S2500 HOUSING	1	UN			85634665	
3	85634699	SUPPORT PANEL S2500 CONTROL PANEL	1	UN			85634699	
4	85634707	CONTROL PANEL BRACKET	1	UN			85634707	
5	85634749	REAR CLOSURE PANEL M150 CONTROL PANEL	1	UN			85634749	
6	85635027	CABLE OUTLET PLATE	1	UN			85635027	
7	85408391	RUBBER GROMMET D47	2	UN			85408391	
8	85635894	GLAND NUT PG13	1	UN			85635894	
9	85635902	PG13 NUT	1	UN			85635902	
10	85636694	RUBBER GROMMET D15	1	UN			85636694	

CONTROL PANEL ASSEMBLY

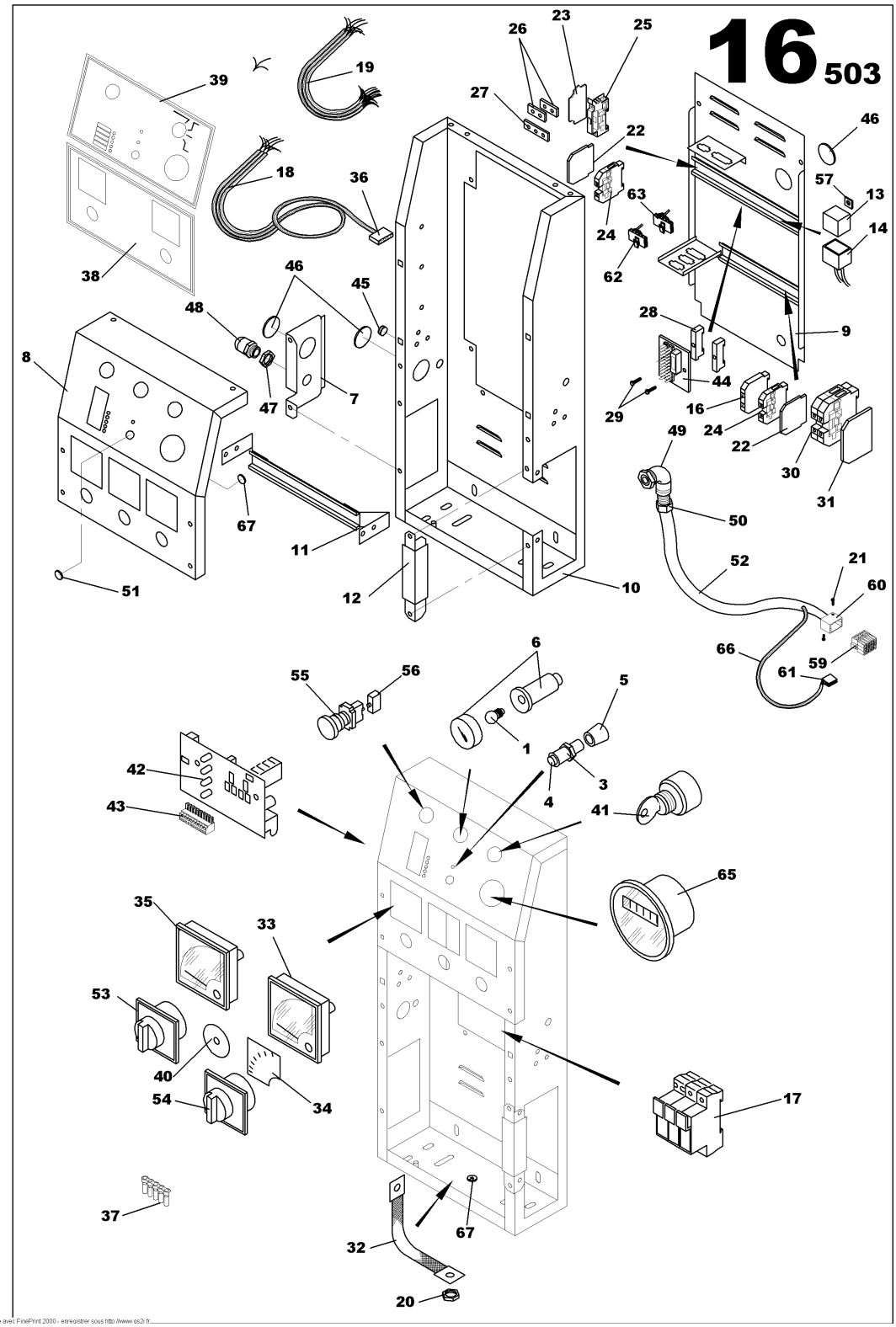

imprimé avec FinePrint 2000 - enregistrer sous http://www.qs2i.fr

CONTROL PANEL ASSEMBLY
85636314

Part numbers listed are only parts used in this model

Item	Part No.	Description	Qty	Un	From SN	To SN	Order PN	Page
1	17130923	LAMP	1	UN			17130923	
3	17130915	CONTACT PUSH BUTTON	1	UN			17130915	
4	17130907	BLACK PUSH BUTTON	1	UN			17130907	
5	17130931	HUB CAP CHROMIUM PLATES	1	UN			17130931	
6	85416527	PANEL LIGHT CYLINDRIC D22	1	UN			85416527	
7	85635027	CABLE OUTLET PLATE	1	UN			85635027	
8	85634707	CONTROL PANEL BRACKET	1	UN			85634707	
9	85634749	REAR CLOSURE PANEL M150 CONTROL PANEL	1	UN			85634749	
10	85634665	CONTROL PANEL S2500 HOUSING	1	UN			85634665	
11	85634632	ELECTRIC DIN RAIL	1	UN			85634632	
12	85634699	SUPPORT PANEL S2500 CONTROL PANEL	1	UN			85634699	
13	85408896	RELAY 12V 20/30A	1	UN			85408896	
14	85408912	AUTOMOBILE RELAY BASE	1	UN			85408912	
15	17130949	SPACER	2	UN			17130949	
16	17130956	STOP	1	UN			17130956	
17	85415503	FUSE HOUSING 10.5x38	1	UN			85415503	
18	17130964	STRAND	1	UN			17130964	
19	17130972	STRAND	1	UN			17130972	
20	17130766	NUT M6	2	UN			17130766	
21	17130980	SCREW	2	UN			17130980	
22	17130998	PLASTIC COVER	3	UN			17130998	
23	17130881	PLASTIC COVER	1	UN			17130881	
24	85505691	TERMINAL CONNECTION	9	UN			85505691	
25	17131004	TERMINAL CONNECTION	8	UN			17131004	
26	17131012	TERMINAL JUNCTION	2	UN			17131012	
27	17131020	TERMINAL JUNCTION	1	UN			17131020	
28	85408854	STOP	2	UN			85408854	
29	17131038	SCREW	2	UN			17131038	

CONTROL PANEL ASSEMBLY

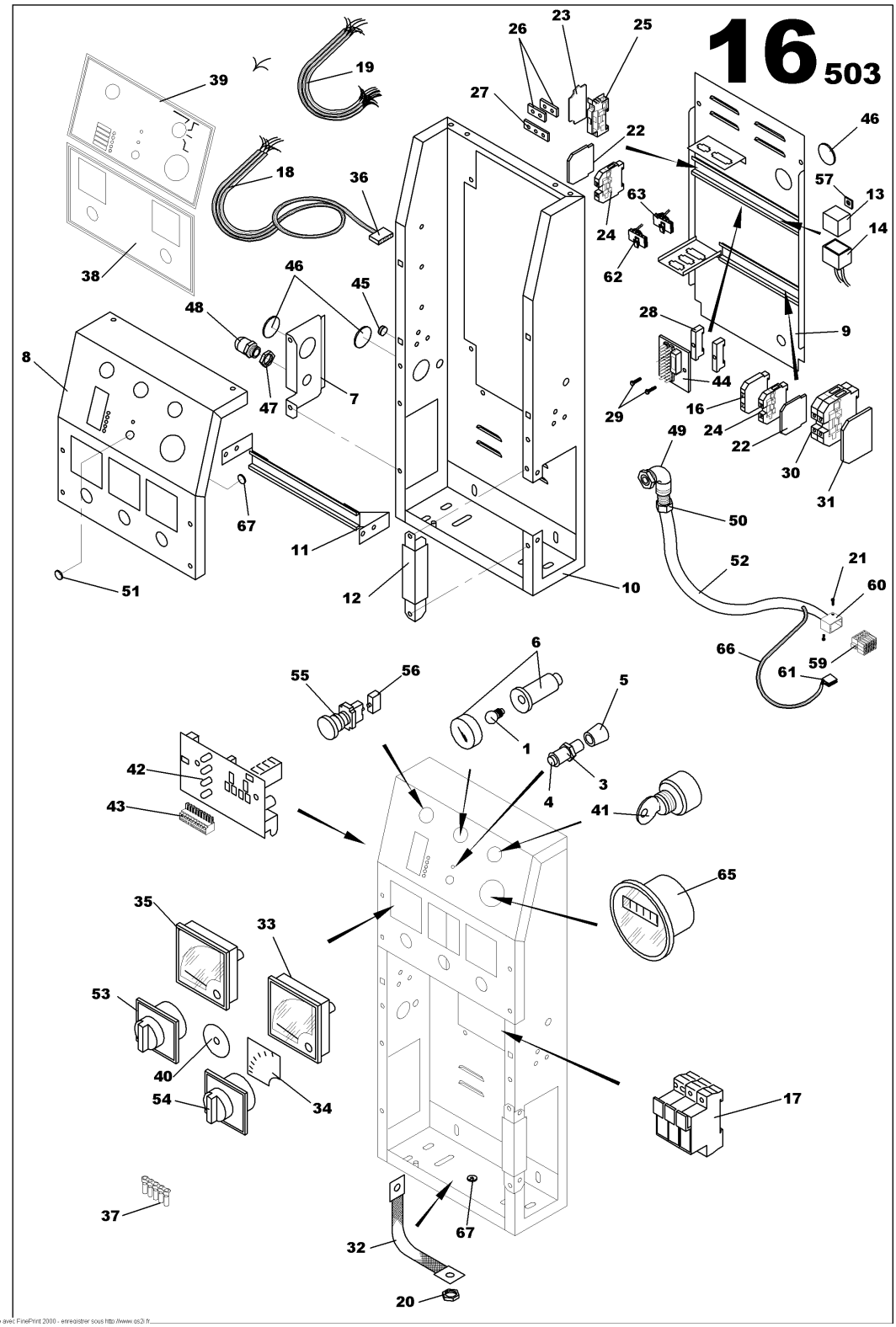

imprimé avec FinePrint 2000 - enregistrer sous http://www.qs2i.fr

CONTROL PANEL ASSEMBLY
85636314

Part numbers listed are only parts used in this model

Item	Part No.	Description	Qty	Un	From SN	To SN	Order PN	Page
30	17131046	TERMINAL CONNECTION BLOCK	2	UN			17131046	
31	85413466	PLASTIC COVER TERMINAL BLOCK	1	UN			85413466	
32	85505543	GROUND WIRES 16mm2	1	UN			85505543	
33	85402477	AMMETER WITH NEEDLE 72x72	1	UN			85402477	
34	85413250	AMPERMETRIC SCALE	1	UN			85413250	
35	85416519	VOLTMETER 0/500V	1	UN			85416519	
36	17131053	5 POINTS APPLIANCE CONNECTOR	1	UN			17131053	
37	17131061	CONTACT	5	UN			17131061	
38	85413797	PLASTIC PLATE L235xh245	1	UN			85413797	
39	85505634	PLASTIC PLATE L2450xh140	1	UN			85505634	
40	85505717	STICKER VOLTAGE ADJUST	1	UN			85505717	
41	85402543	KEY COBO ASSEMBLY	1	UN			85402543	129
42	85402527	CARD PGS	1	UN			85402527	
43	17130899	APPLIANCE CONNECTOR	1	UN			17130899	
44	85627222	CARD CDF	1	UN			85627222	131
45	17131079	CAP	1	UN			17131079	
46	85408391	RUBBER GROMMET D47	3	UN			85408391	
47	85635902	PG13 NUT	1	UN			85635902	
48	85635894	GLAND NUT PG13	1	UN			85635894	
49	17131087	PIPE UNION	1	UN			17131087	
50	85408664	GLAND NUT SCREW PG16	1	UN			85408664	
51	17131095	OBTURATOR	1	UN			17131095	
52	17131137	ELECTRICAL SHAFT D16	1	ML			17131137	
53	85412955	VOLTMETER SELECTOR SWITCH	1	UN			85412955	
54	85412930	AMMETER SELECTOR SWITCH	1	UN			85412930	
55	85631422	EMERGENCY STOP BUTTON	1	UN			85631422	
56	85632362	AUXILARY CONTACT NO	1	UN			85632362	
57	17131111	CLIP	1	UN			17131111	

CONTROL PANEL ASSEMBLY

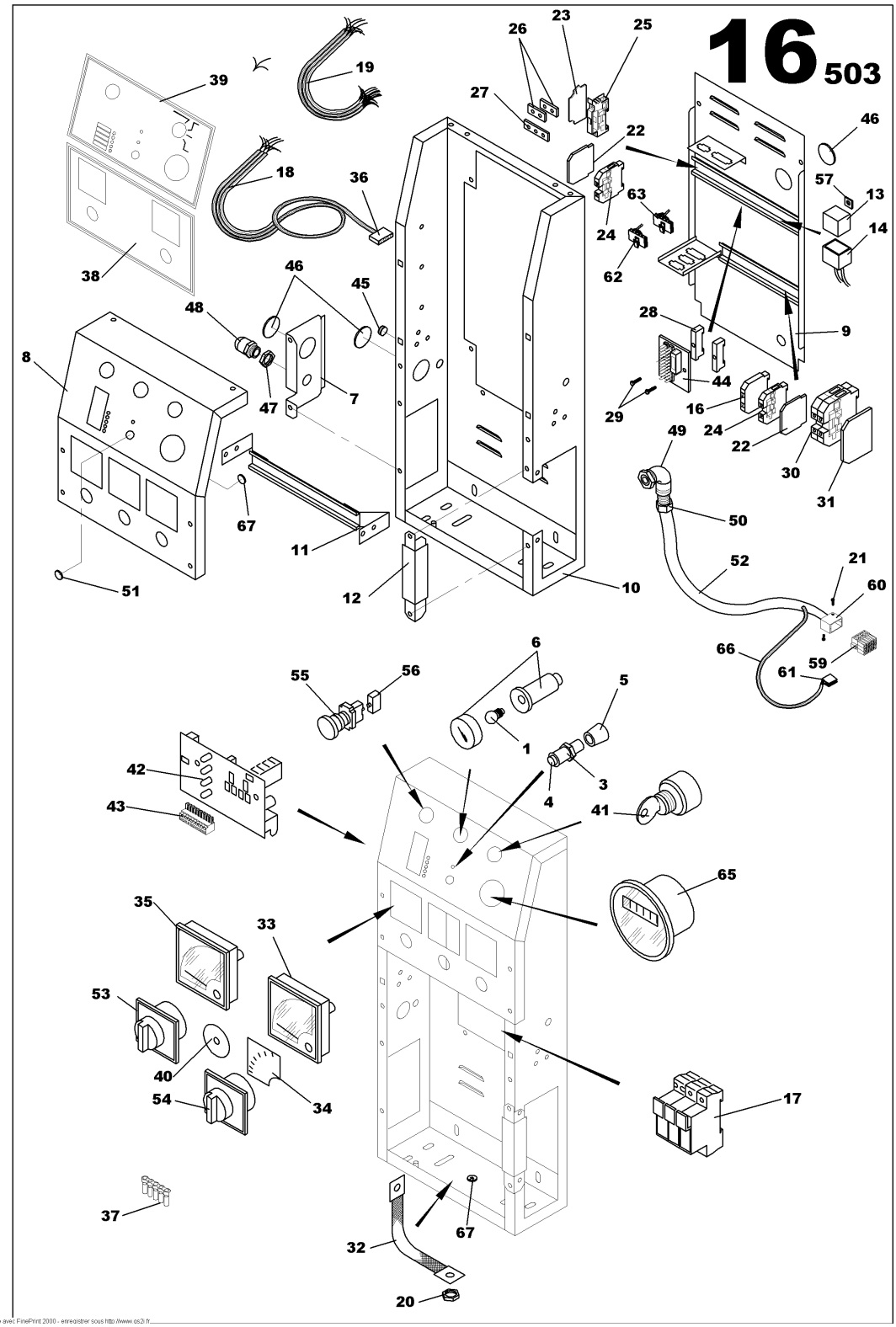

imprimé avec FinePrint 2000 - enregistrer sous http://www.qs2i.fr

CONTROL PANEL ASSEMBLY
85636314

Part numbers listed are only parts used in this model

Item	Part No.	Description	Qty	Un	From SN	To SN	Order PN	Page
58	17131152	SCREW CHC M4	1	UN			17131152	
59	85413052	CONNECTOR 15 POLE MALE	1	UN			85413052	
60	17130592	COVER	2	UN			17130592	
61	17130550	2 POINTS APPLIANCE CONNECTOR	1	UN			17130550	
62	17130568	4 POINTS APPLIANCE CONNECTOR	1	UN			17130568	
63	17130584	FEMALE BLOCK	1	UN			17130584	
64	17131103	CLIP	18	UN			17131103	
65	85412971	HOUR METER	1	UN			85412971	
66	85635183	INTELLISYSTM WIRING LOOM 010-BAT	1	UN			85635183	
67	17131145	EARTH STICKER	2	UN			17131145	

KEY COBO ASSEMBLY

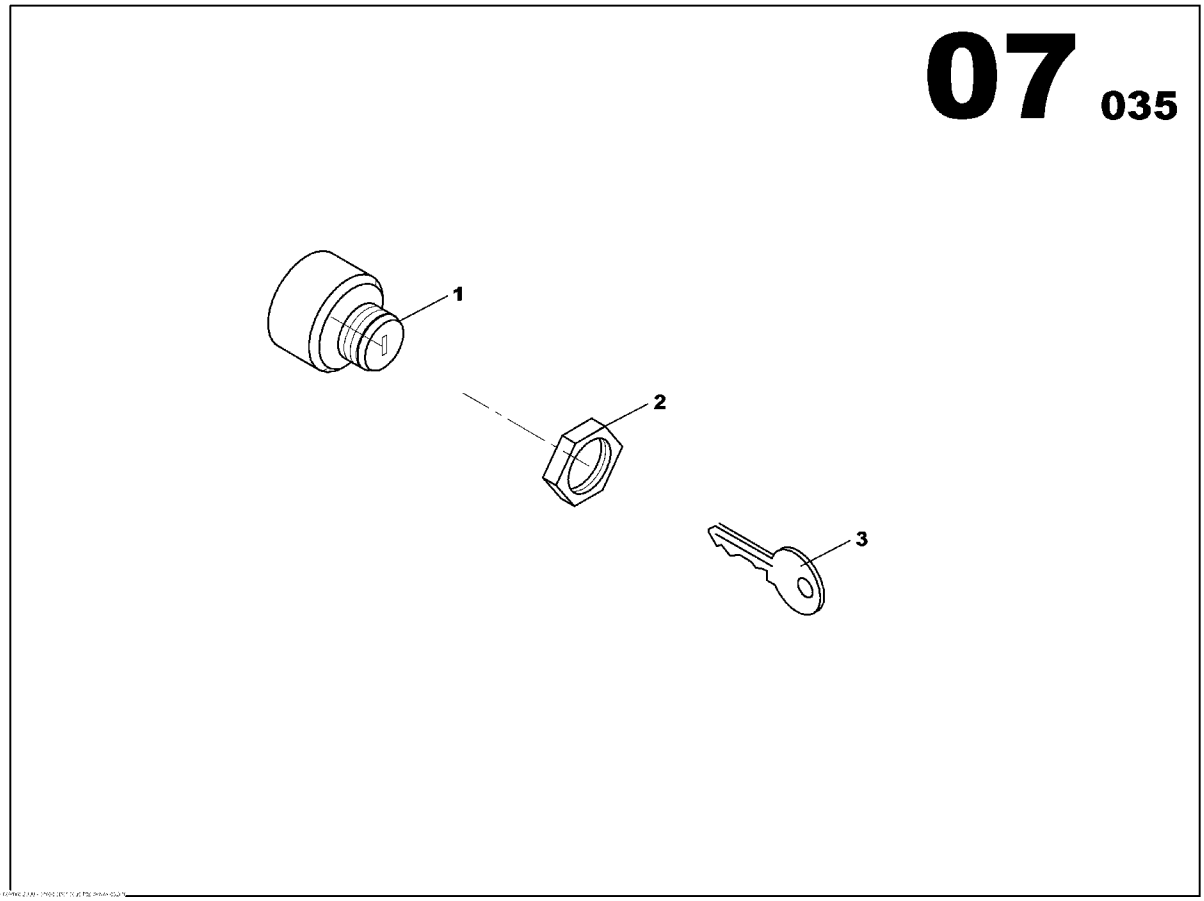

KEY COBO ASSEMBLY
85402543

Part numbers listed are only parts used in this model

Item	Part No.	Description	Qty	Un	From SN	To SN	Order PN	Page
1	85412948	KEY SELECTOR SWITCH	1	UN			85412948	
2	85413268	SWITCH NUT	1	UN			85413268	
3	85412872	KEY SWITCH	2	UN			85412872	

CARD CDF

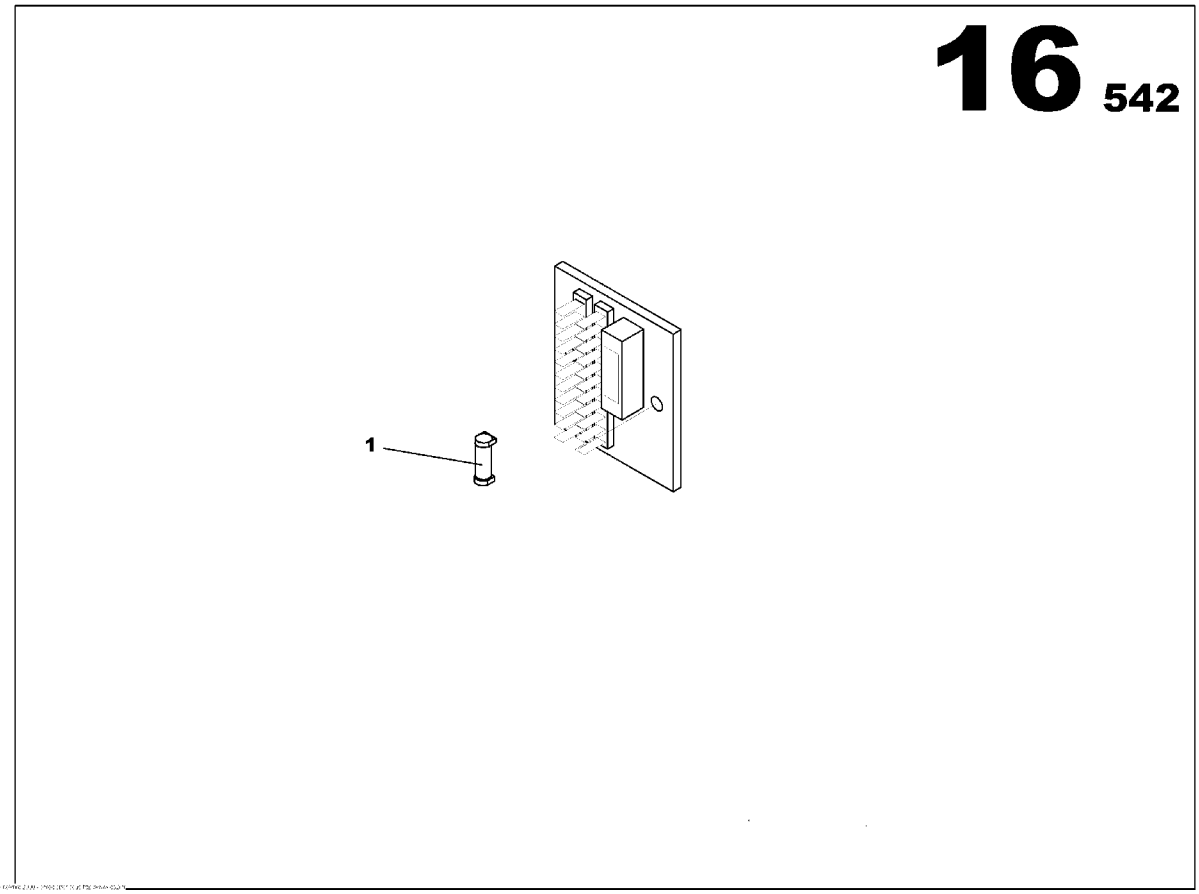

CARD CDF
85627222

Part numbers listed are only parts used in this model

Item	Part No.	Description	Qty	Un	From SN	To SN	Order PN	Page
1	85426120	FUSE CYLINDRICAL 10A	1	UN			85426120	

ELECTRIC SUPPLY FUNCTION

Non illustré
Not illustrated

ELECTRIC SUPPLY FUNCTION

Part numbers listed are only parts used in this model

Item	Part No.	Description	Qty	Un	From SN	To SN	Order PN	Page
1	85634814	POWER TERMINAL CONNECTIONS 25A ASSEMBLY	1	UN			85634814	135
2	85634947	ELECTRIC CONNECTION 25A ASSEMBLY	1	UN			85634947	139
3	85635662	STANDARD OPTION MCPS ASSEMBLY M150	1	UN			85635662	141
4	85635746	RELEASE COIL	1	UN			85635746	143
5	17130626	AMPERMETRIC SCALE	1	UN			17130626	145

POWER TERMINAL CONNECTIONS 25A ASSEMBLY

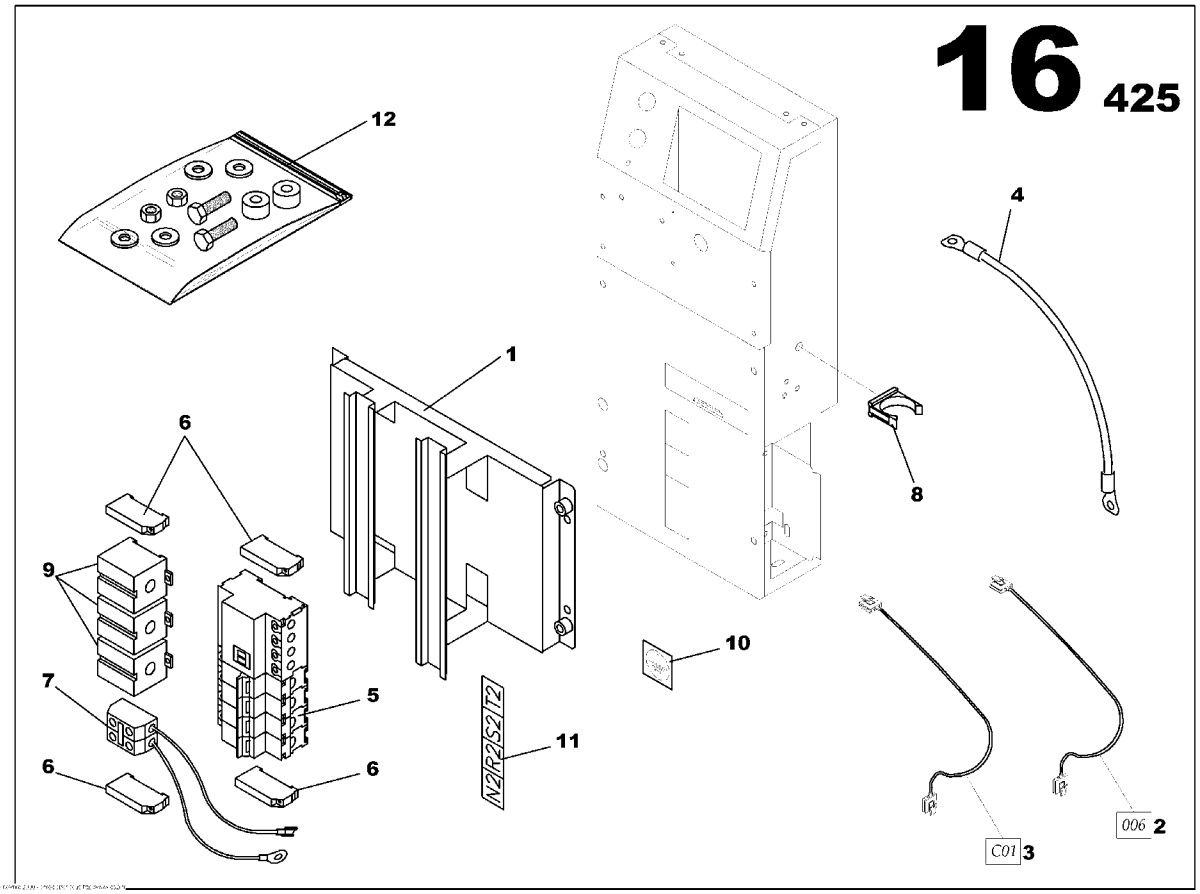

POWER TERMINAL CONNECTIONS 25A ASSEMBLY
85634814

Part numbers listed are only parts used in this model

Item	Part No.	Description	Qty	Un	From SN	To SN	Order PN	Page
1	85635019	CONTROL PANEL S2500 CIRCUIT BREAKER BRACKET	1	UN			85635019	
2	85635373	INTELLISYSTM WIRING LOOM 006	1	UN			85635373	
3	85635456	INTELLISYSTM WIRING LOOM 001	1	UN			85635456	
4	85635589	NEUTRAL/EARTH SYSTEM CABLE 16mm2 L150	1	UN			85635589	
5	85413185	MOULDED CASE CIRCUIT BREAKER 4x25A	1	UN			85413185	
6	85408706	STOP	4	UN			85408706	
7	85635944	TERMINAL JUNCTION	1	UN			85635944	
8	85636033	SHAFT BRACKET	1	UN			85636033	
9	85636058	CURRENT TRANSFORMER 40/5	3	UN			85636058	
10	85409084	STICKER EARTH SYMBOL	1	UN			85409084	
11	85409092	STICKER POWER LINK	1	UN			85409092	
12	85636439	SCREWS ASSEMBLY	1	UN			85636439	137

SCREWS ASSEMBLY

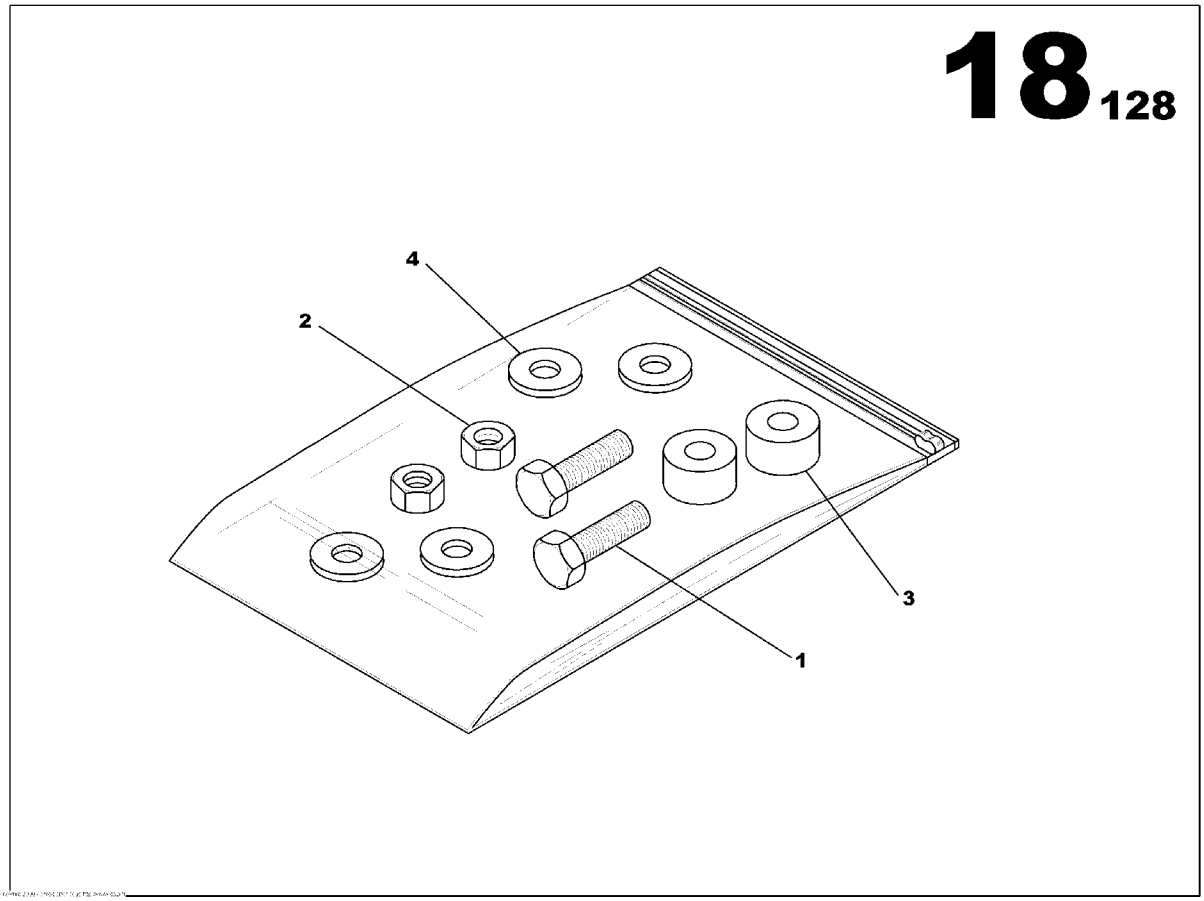

SCREWS ASSEMBLY
85636439

Part numbers listed are only parts used in this model

Item	Part No.	Description	Qty	Un	From SN	To SN	Order PN	Page
1	85636330	SCREW H M6x12	2	UN			85636330	
2	85507911	NUT M6	2	UN			85507911	
3	85636652	SPACER	2	UN			85636652	
4	85636744	WASHER 6x18	4	UN			85636744	

ELECTRIC CONNECTION 25A ASSEMBLY

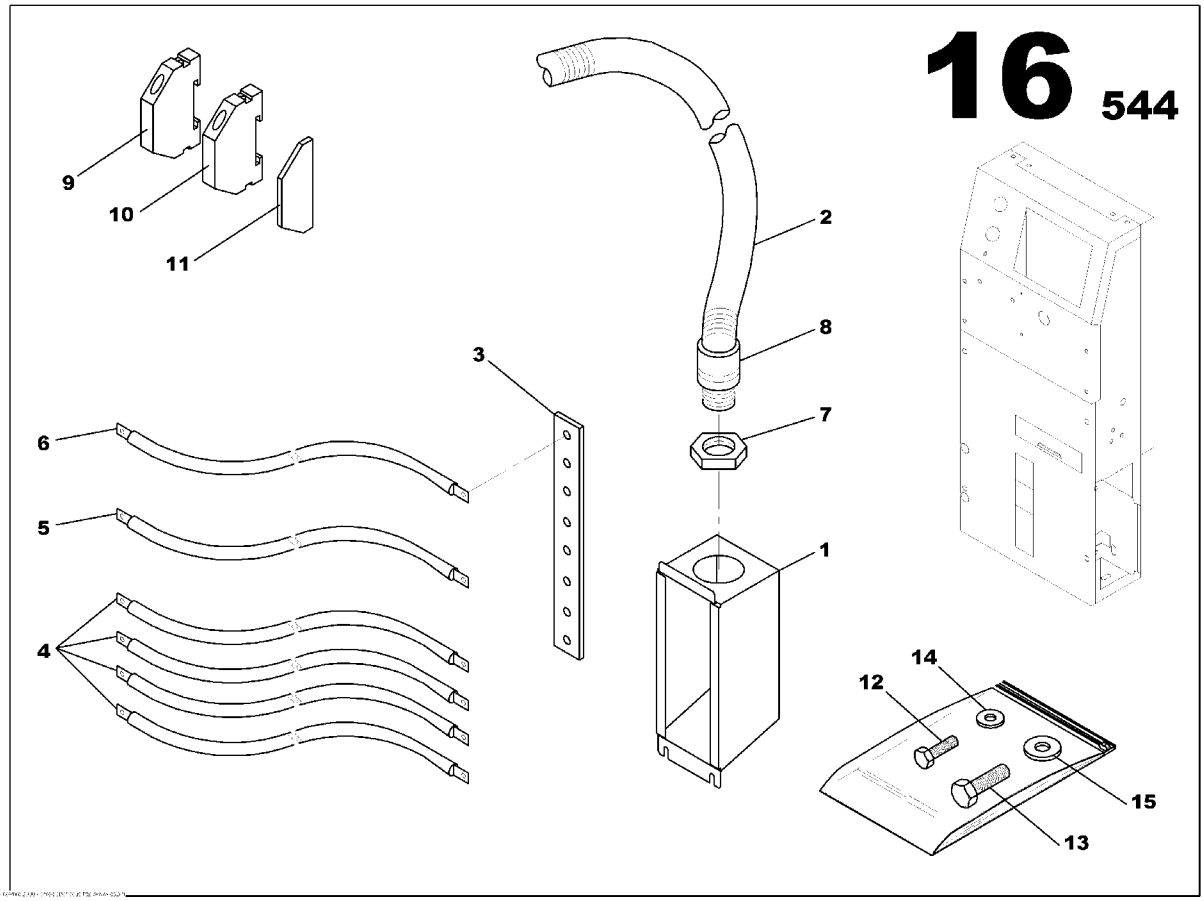

ELECTRIC CONNECTION 25A ASSEMBLY
85634947

Part numbers listed are only parts used in this model

Item	Part No.	Description	Qty	Un	From SN	To SN	Order PN	Page
1	85635035	CONNECTION HOUSING	1	UN			85635035	
2	85499440	ELECTRICAL SHAFT D36	0.75	ML			85499440	
3	85635423	COPPER BAR 5x25	1	UN			85635423	
4	85635472	POWER CABLE 25A 2,5mm2 L1600	4	UN			85635472	
5	85635548	EARTHING CABLE 16mm2 L1600	1	UN			85635548	
6	85635563	NEUTRAL/EARTH SYSTEM CABLE 16mm2 L400 Gr/Ye	1	UN			85635563	
7	85408680	GLAND NUT SCREW PG36	1	UN			85408680	
8	85501575	PIPE UNION PG36	1	UN			85501575	
9	85635951	TERMINAL BLOCK	1	UN			85635951	
10	85635969	TERMINAL BLOCK	1	UN			85635969	
11	85635993	PLASTIC COVER TERMINAL BLOCK	1	UN			85635993	
12	85636348	SCREW H M6x10	3	UN			85636348	
13	85636710	SCREW H M8x12	2	UN			85636710	
14	85636736	WASHER 6x12	3	UN			85636736	
15	85636751	WASHER 8x16	2	UN			85636751	

STANDARD OPTION MCPS ASSEMBLY M150

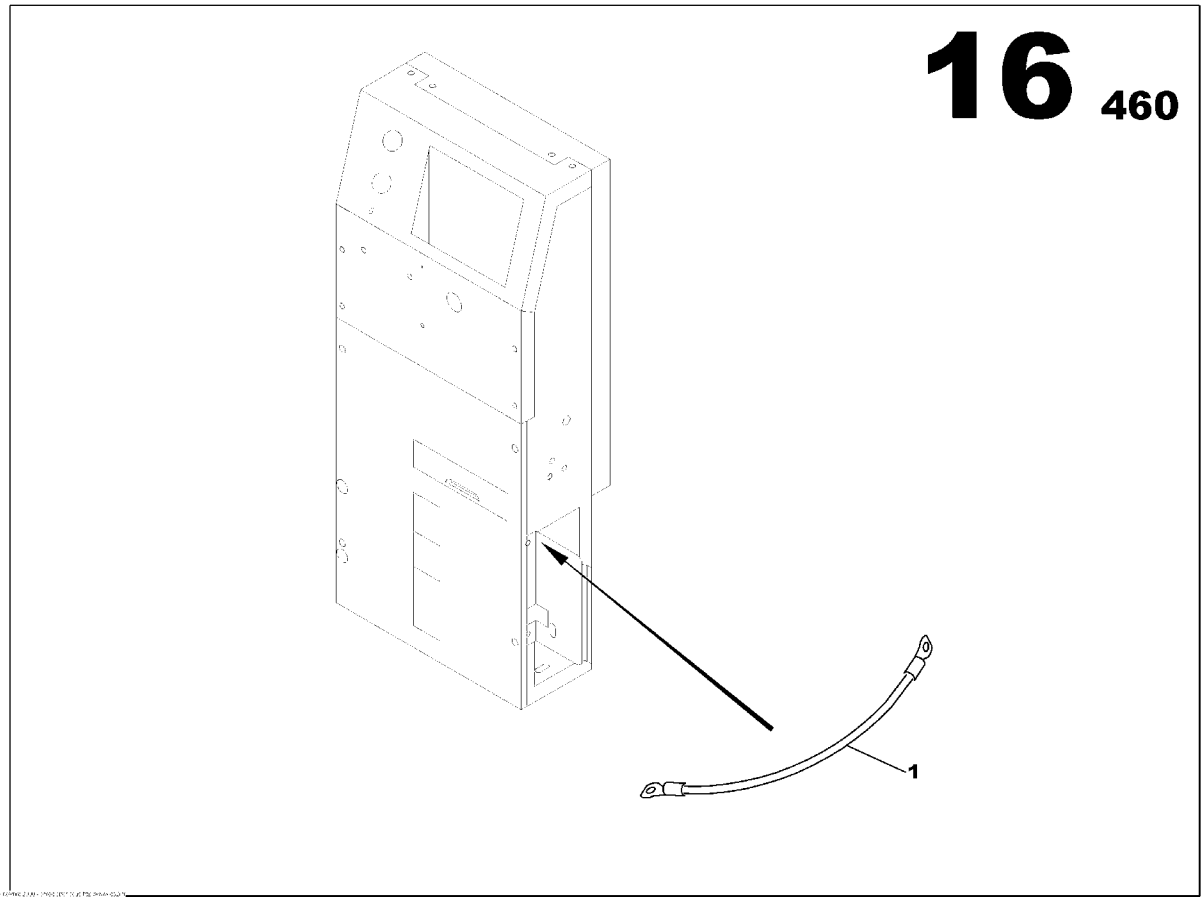

STANDARD OPTION MCPS ASSEMBLY M150
85635662

Part numbers listed are only parts used in this model

Item	Part No.	Description	Qty	Un	From SN	To SN	Order PN	Page
1	85635654	EARTH CABLE	1	UN			85635654	

RELEASE COIL

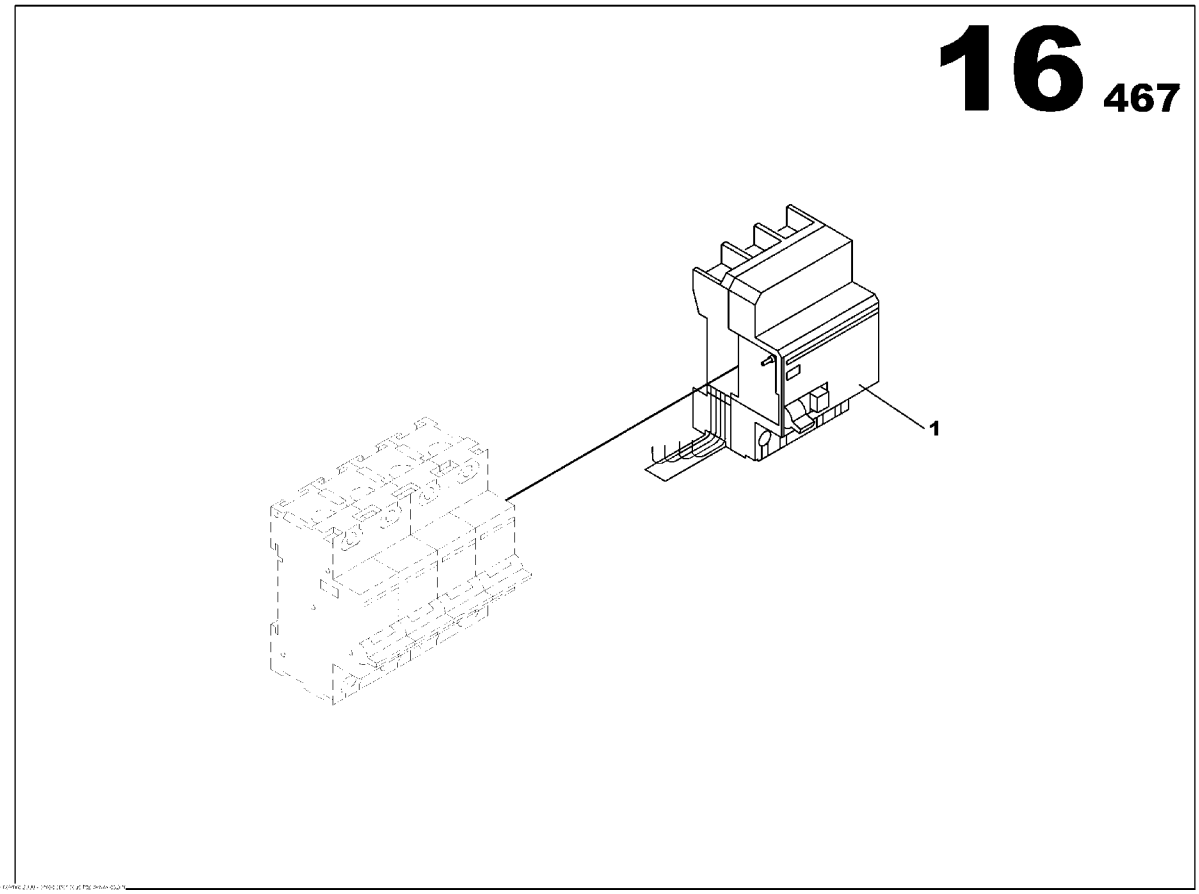

RELEASE COIL
85635746

Part numbers listed are only parts used in this model

Item	Part No.	Description	Qty	Un	From SN	To SN	Order PN	Page
1	85495893	EARTH LEAKAGE 30mA 240/415V	1	UN			85495893	

AMPERMETRIC SCALE

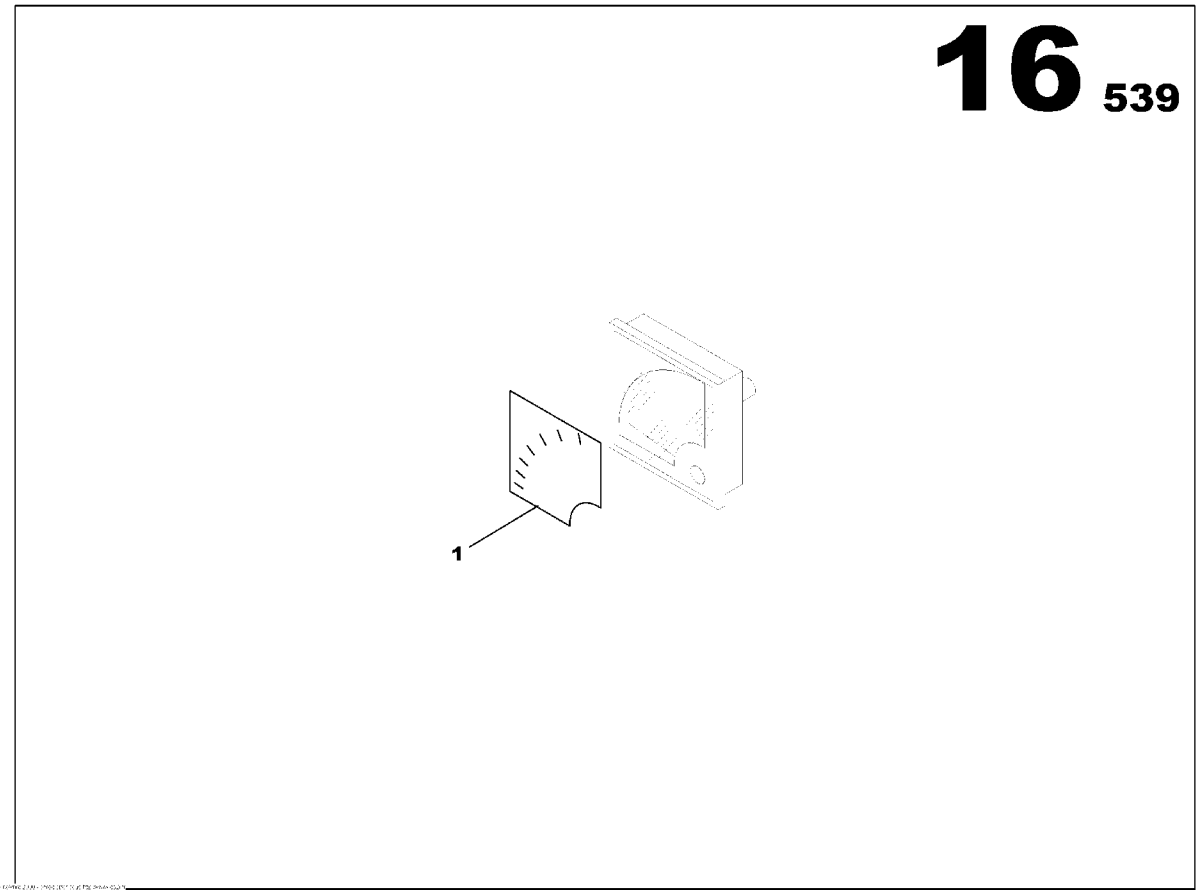

AMPERMETRIC SCALE
17130626

Part numbers listed are only parts used in this model

Item	Part No.	Description	Qty	Un	From SN	To SN	Order PN	Page
1	17130576	AMPERMETRIC SCALE	1	UN			17130576	

POWER CONNECTION BLOCK FUNCTION

Non illustré
Not illustrated

POWER CONNECTION BLOCK FUNCTION

Part numbers listed are only parts used in this model

Item	Part No.	Description	Qty	Un	From SN	To SN	Order PN	Page
1	85621175	TERMINAL M107 ASSEMBLY	1	UN			85621175	149

TERMINAL M107 ASSEMBLY

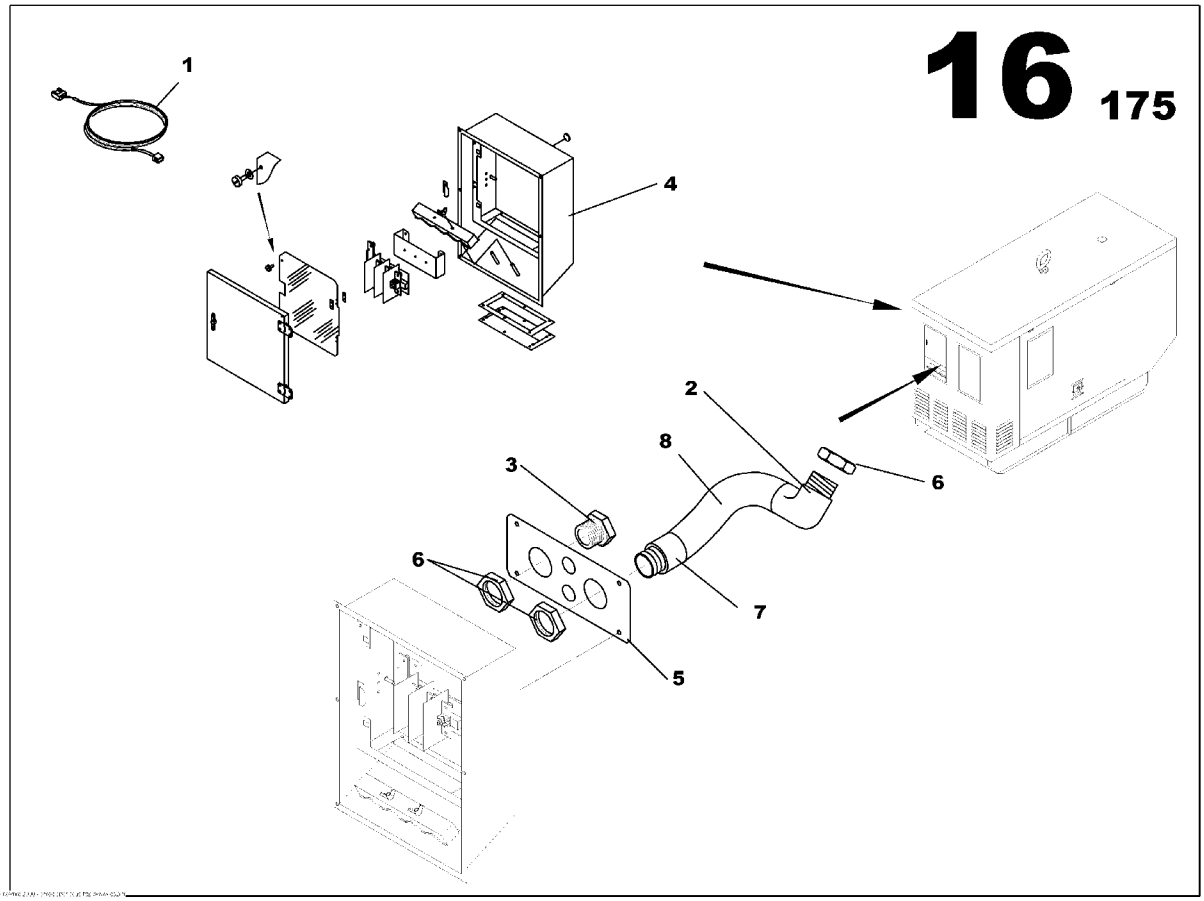

TERMINAL M107 ASSEMBLY
85621175

Part numbers listed are only parts used in this model

Item	Part No.	Description	Qty	Un	From SN	To SN	Order PN	Page
1	17130618	WIRING LOOM CONNECTIONS BLOCK	1	UN			17130618	
2	85499689	PIPE UNION ELBOW 90° PG36	1	UN			85499689	
3	85621233	PLUG ELECTRIC D36	1	UN			85621233	
4	85414829	MCPS CONNECTION ASSEMBLY	1	UN			85414829	151
5	85499150	GLAND NUT PLATE TERMINAL CONNECTION M107	1	UN			85499150	
6	85408680	GLAND NUT SCREW PG36	3	UN			85408680	
7	85501575	PIPE UNION PG36	1	UN			85501575	
8	85499440	ELECTRICAL SHAFT D36	0.9	ML			85499440	

MCPS CONNECTION ASSEMBLY

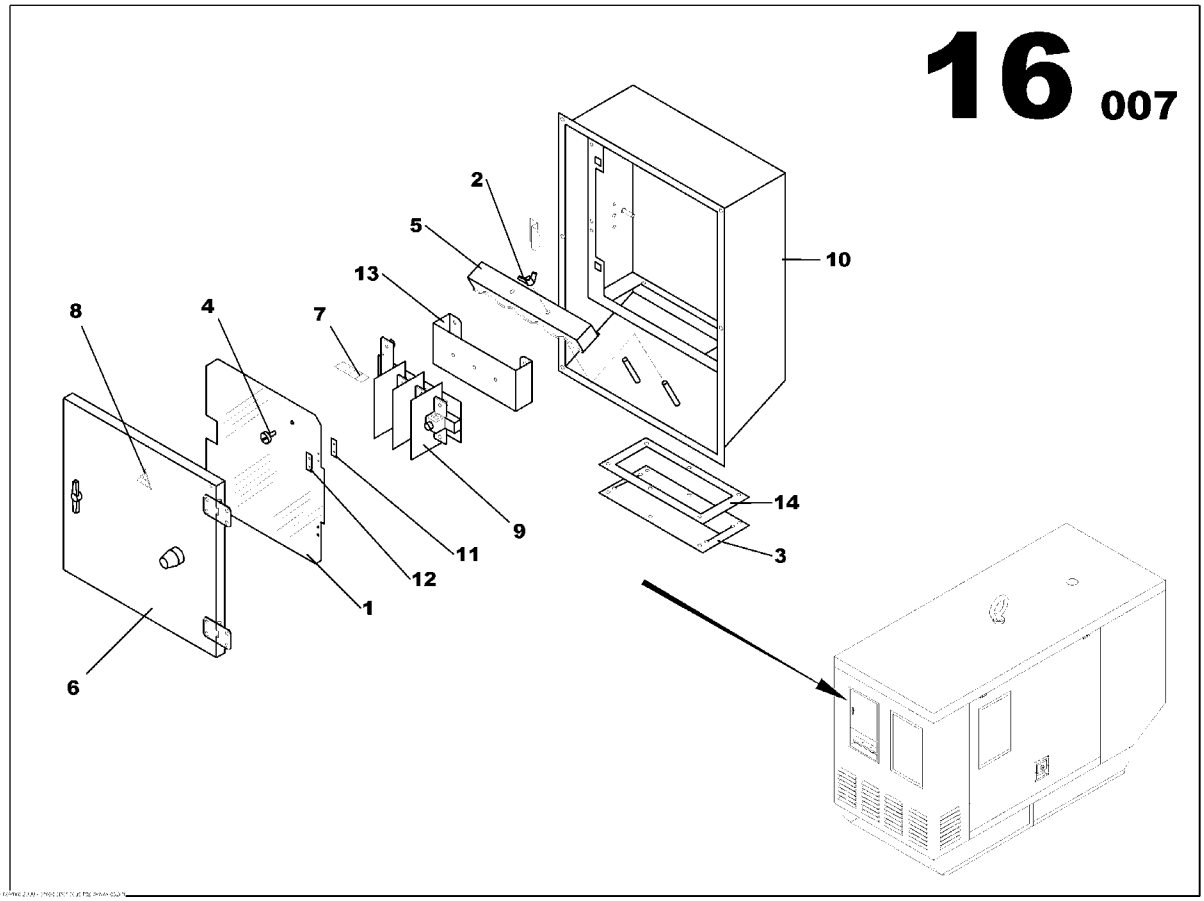

MCPS CONNECTION ASSEMBLY
85414829

Part numbers listed are only parts used in this model

Item	Part No.	Description	Qty	Un	From SN	To SN	Order PN	Page
1	85415545	TERMINAL CONNECTION DOOR M107	1	UN			85415545	
2	85410140	WING NUT M8	2	UN			85410140	
3	85412534	CABLE OUTPUT RUBBER SCREEN	1	UN			85412534	
4	85409217	SLAM SHUT ASSEMBLY	1	UN			85409217	159
5	85416030	FUEL FILTER BRACKET	1	UN			85416030	
6	85414860	PANEL DOOR M107 ASSEMBLY	1	UN			85414860	153
7	85409126	STICKER POWER LINK	1	UN			85409126	
8	85409084	STICKER EARTH SYMBOL	1	UN			85409084	
9	17130683	POWER CONNECTION BLOCK	1	UN			17130683	
10	85416048	MCPS BRACKET	1	UN			85416048	
11	85407708	HINGE FIXING PLATE M214	2	UN			85407708	
12	85407690	DOOR SHIM ASSEMBLY	2	UN			85407690	
13	85415933	TERMINAL BRACKET	1	UN			85415933	
14	85415982	WIRE BIB OUTPUT BRACKET	1	UN			85415982	

PANEL DOOR M107 ASSEMBLY

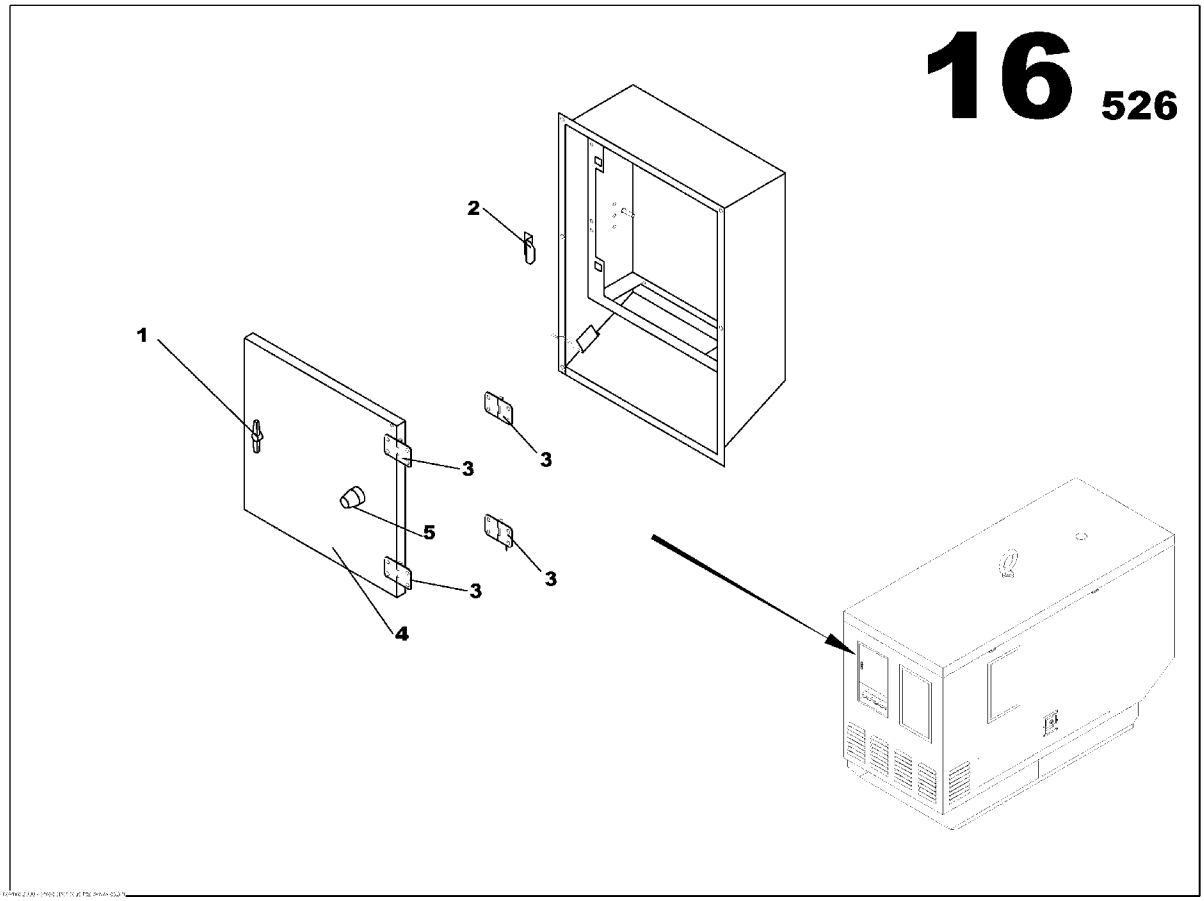

PANEL DOOR M107 ASSEMBLY
85414860

Part numbers listed are only parts used in this model

Item	Part No.	Description	Qty	Un	From SN	To SN	Order PN	Page
1	85402907	SLAM SHUT ASSEMBLY	1	UN			85402907	155
2	85407682	STRIKER PLATE CANOPY MCPS DOOR	1	UN			85407682	
3	85406130	DOOR HINGE	4	UN			85406130	
4	85415537	TERMINAL CONNECTION DOOR M107	1	UN			85415537	
5	85406189	ANTI-VIBRATION MOUNT 140daN 15mm	1	UN			85406189	

SLAM SHUT ASSEMBLY

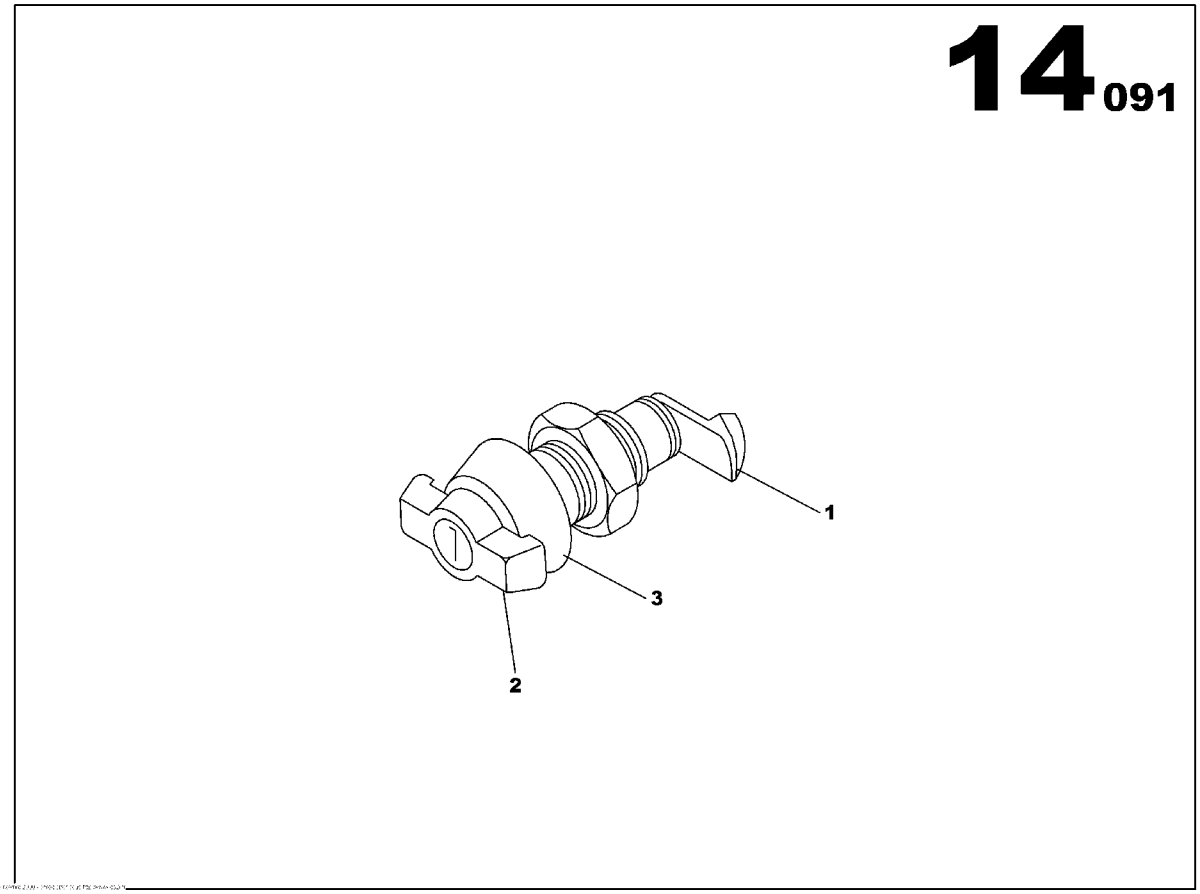

SLAM SHUT ASSEMBLY
85402907

Part numbers listed are only parts used in this model

Item	Part No.	Description	Qty	Un	From SN	To SN	Order PN	Page
1	85406221	SLAM SHUT DOOR LATCH	1	UN			85406221	
2	85406239	SLAM SHUT LATCH HANDLE	1	UN			85406239	157
3	85406247	SLAM SHUT FASTENER	1	UN			85406247	

SLAM SHUT LATCH HANDLE

Non illustré
Not illustrated

SLAM SHUT LATCH HANDLE
85406239

Part numbers listed are only parts used in this model

Item	Part No.	Description	Qty	Un	From SN	To SN	Order PN	Page
1	85632883	WBH LATCHE KEY	1	UN			85632883	

SLAM SHUT ASSEMBLY

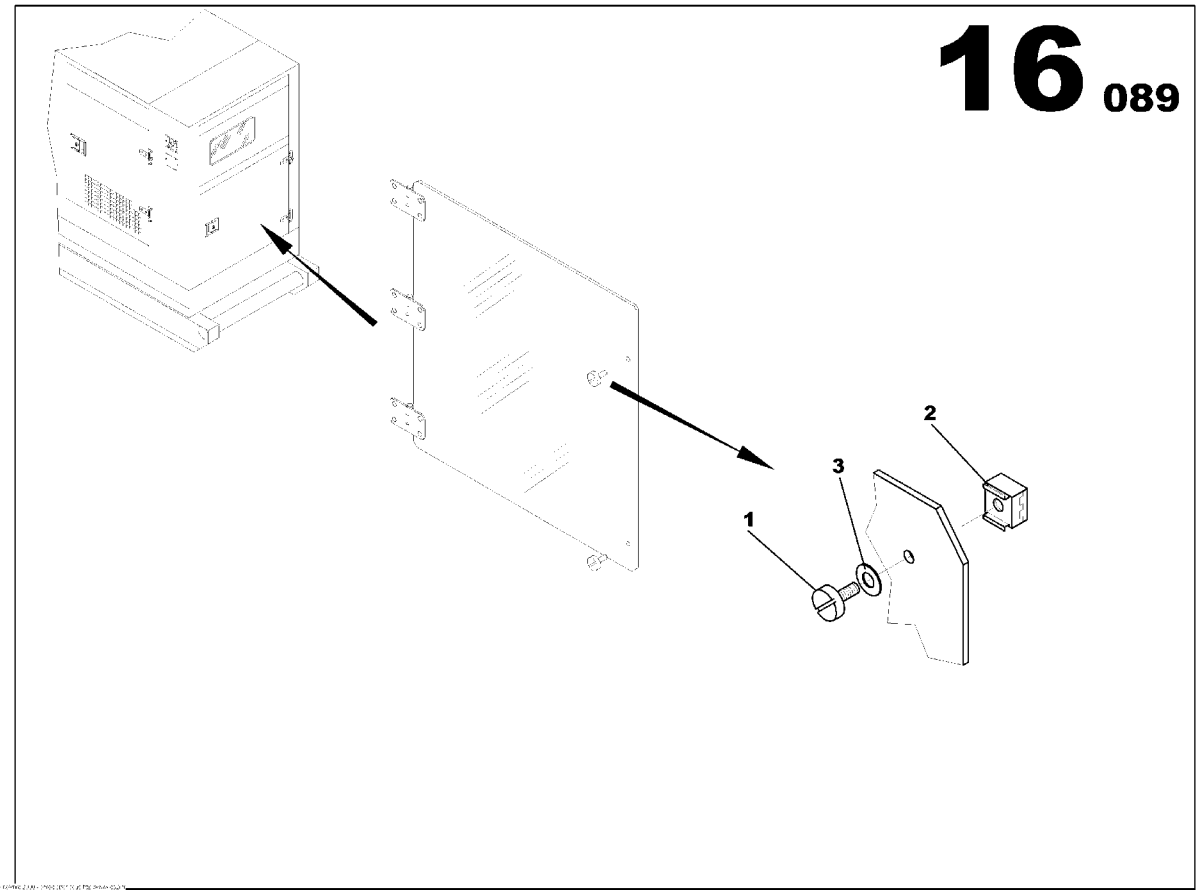

SLAM SHUT ASSEMBLY
85409217

Part numbers listed are only parts used in this model

Item	Part No.	Description	Qty	Un	From SN	To SN	Order PN	Page
1	85409225	1/4 TURN SCREW D9 *-Order 31801021601NE*	2	UN			85409225	
2	85409233	CAPTIVE NUT FOR 1/4 TURN BOLT *-Order 31801021601NE*	2	UN			85409233	
3	85409241	WASHER FOR 1/4 TURN FASTENER *-Order 31801021601NE*	2	UN			85409241	

BASE INTELISYS OPTION

Non illustré
Not illustrated

BASE INTELISYS OPTION

Part numbers listed are only parts used in this model

Item	Part No.	Description	Qty	Un	From SN	To SN	Order PN	Page
1	85635225	TELYS 010 WIRING LOOM ASSEMBLY JD 6081	1	UN			85635225	163
2	85635357	ELECTRICAL SHAFT	1	ML			85635357	
3	85634616	EMERGENCY STOP PANEL ASSEMBLY	1	UN			85634616	165
4	85639599	DECALS TERMINAL BLOCK ASSEMBLY	1	UN			85639599	169
5	85411551	INTELLISYSTM OPTION CB CARD	1	UN			85411551	171
6	85636272	S2500 DASHBOARD OPTION	1	UN			85636272	177
7	17130741	INTELLISYSTM PARAMETER OPTION	1	UN			17130741	
8	85635415	TELYS 035 WIRING LOOM ASSEMBLY JD 6081	1	UN			85635415	187

TELYS 010 WIRING LOOM ASSEMBLY JD 6081

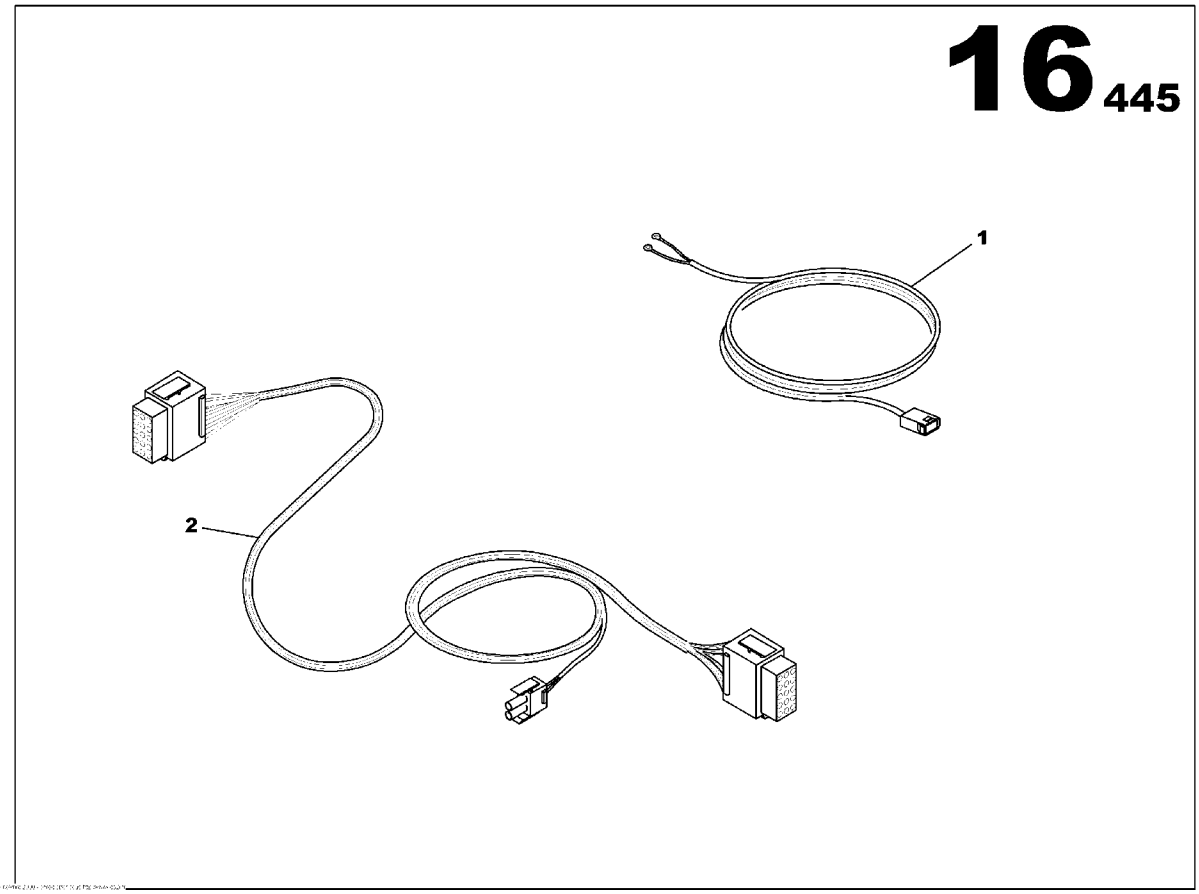

TELYS 010 WIRING LOOM ASSEMBLY JD 6081
85635225

Part numbers listed are only parts used in this model

Item	Part No.	Description	Qty	Un	From SN	To SN	Order PN	Page
1	85635183	INTELLISYSTM WIRING LOOM 010-BAT	1	UN			85635183	
2	85635209	INTELLISYSTM WIRING LOOM 010	1	UN			85635209	

EMERGENCY STOP PANEL ASSEMBLY

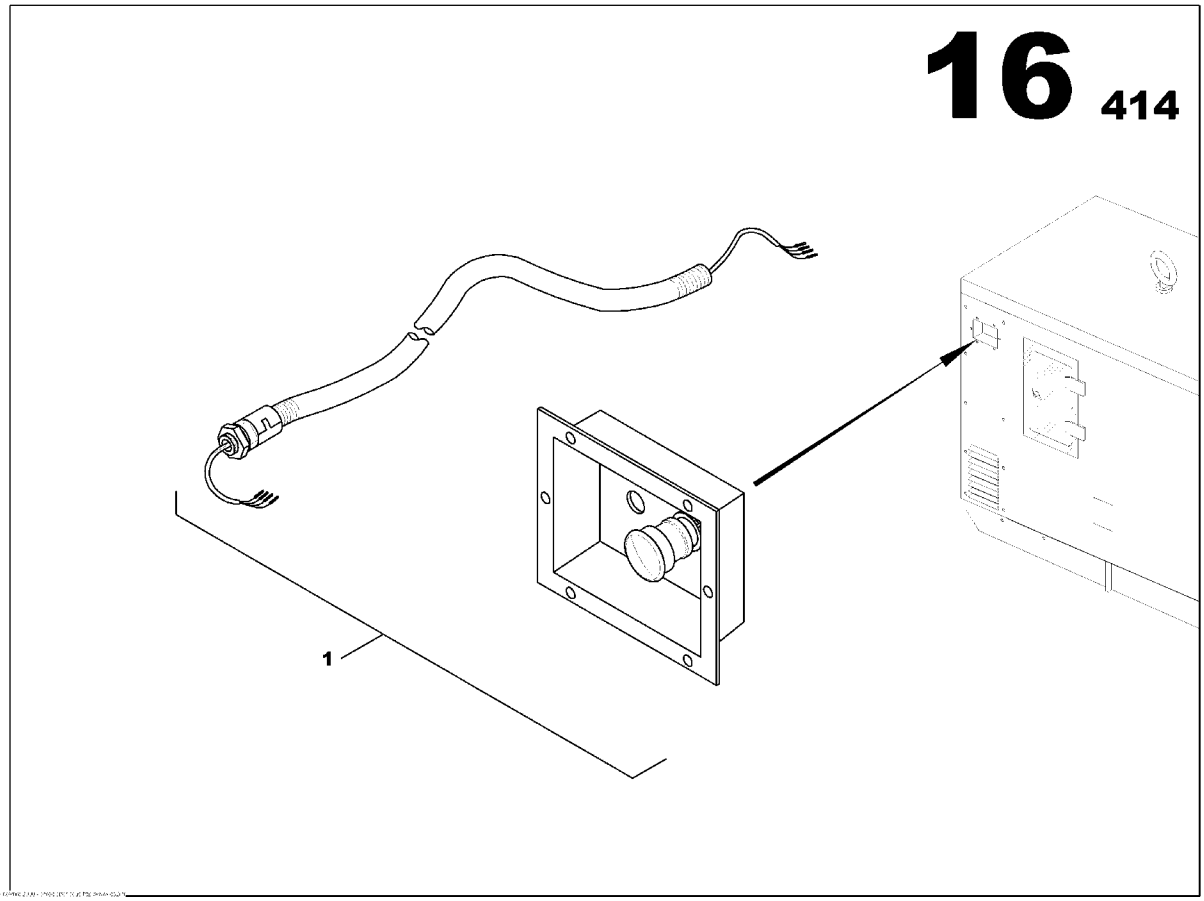

EMERGENCY STOP PANEL ASSEMBLY
85634616

Part numbers listed are only parts used in this model

Item	Part No.	Description	Qty	Un	From SN	To SN	Order PN	Page
1	85634624	EMERGENCY STOP PANEL ASSEMBLY	1	UN			85634624	167

EMERGENCY STOP PANEL ASSEMBLY

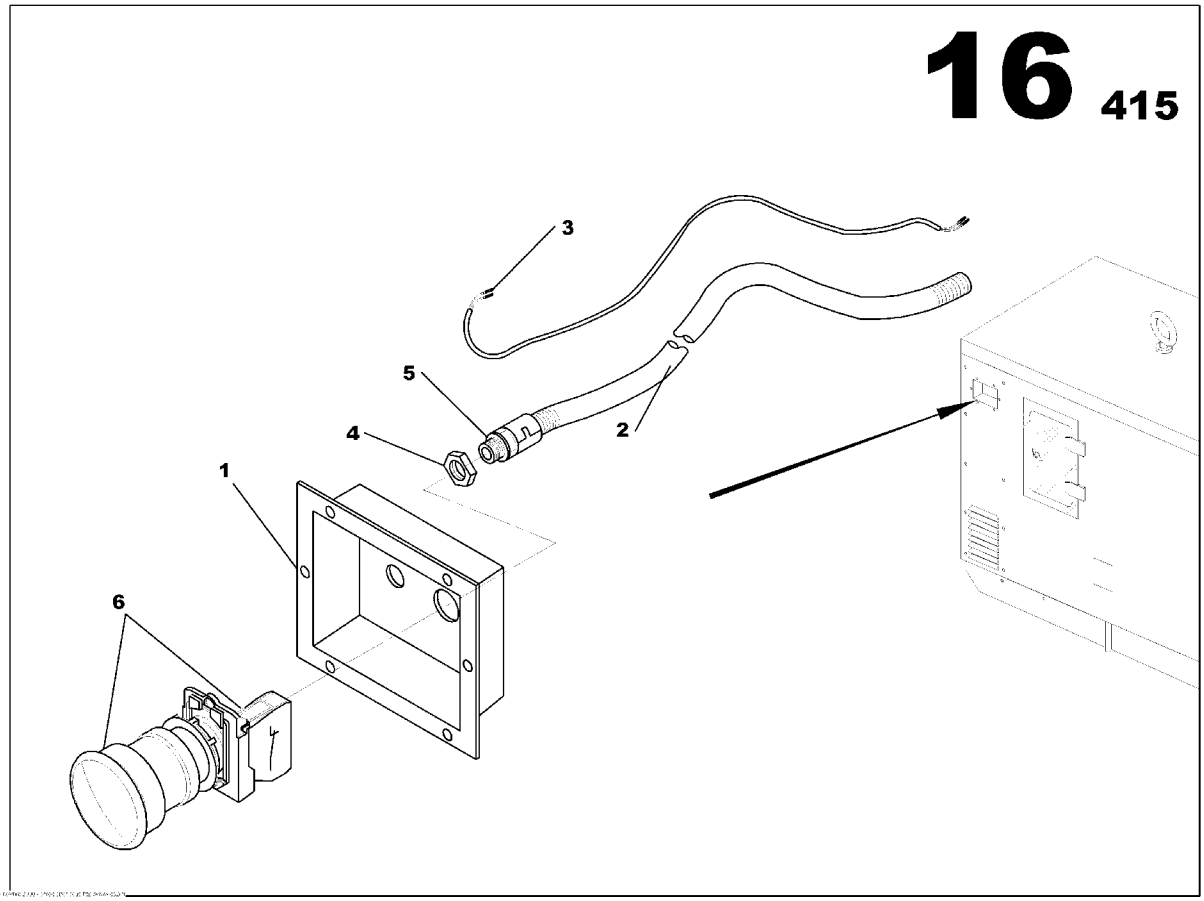

EMERGENCY STOP PANEL ASSEMBLY
85634624

Part numbers listed are only parts used in this model

Item	Part No.	Description	Qty	Un	From SN	To SN	Order PN	Page
1	85407294	EMERGENCY STOP PANEL	1	UN			85407294	
2	85635241	ELECTRICAL SHAFT D09	1.2	ML			85635241	
3	85635621	EMERGENCY STOP WIRING LOOM	1	UN			85635621	
4	85506061	GLAND NUT SCREW PG9	1	UN			85506061	
5	85499663	PIPE UNION PG9	1	UN			85499663	
6	85631422	EMERGENCY STOP BUTTON	1	UN			85631422	

DECALS TERMINAL BLOCK ASSEMBLY

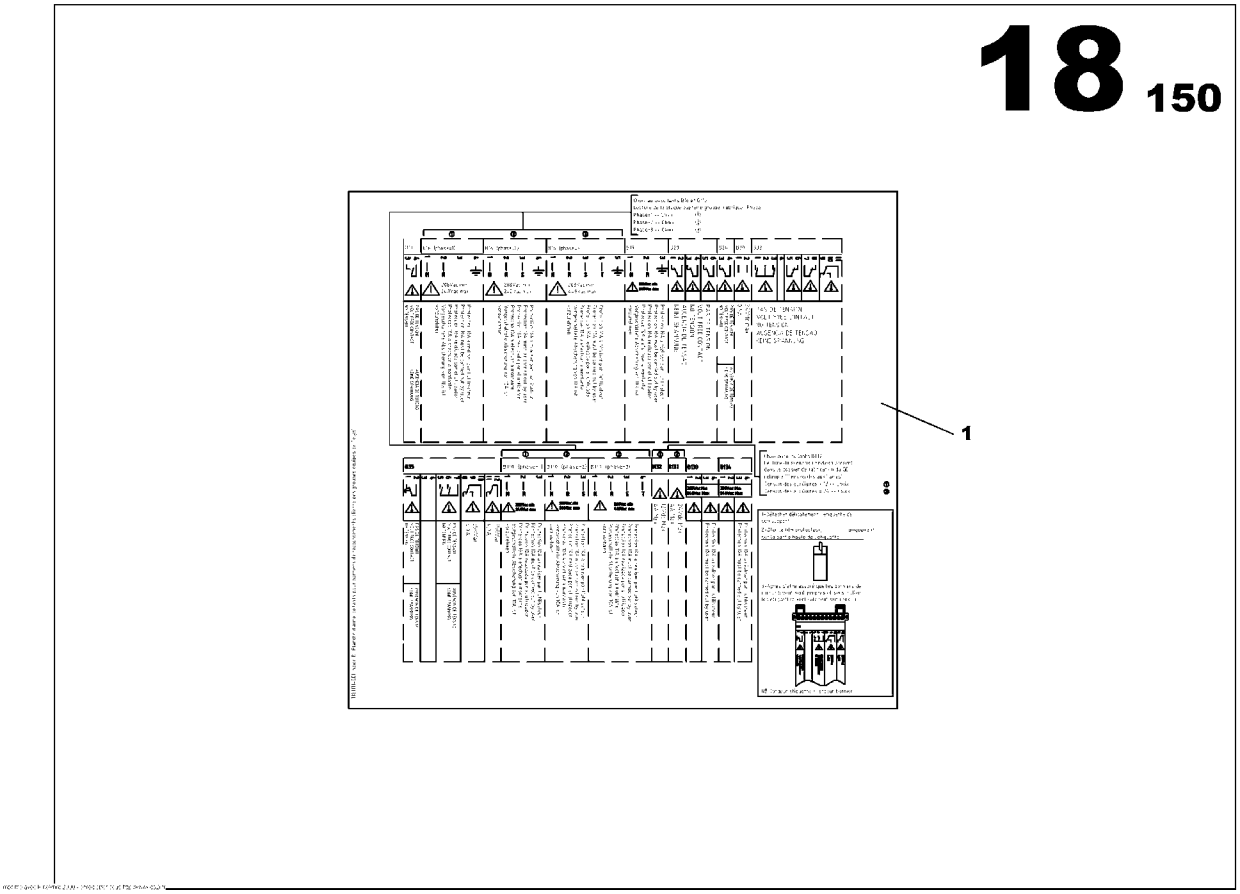

DECALS TERMINAL BLOCK ASSEMBLY
85639599

Part numbers listed are only parts used in this model

Item	Part No.	Description	Qty	Un	From SN	To SN	Order PN	Page
1	85639573	STICKER TERMINAL BLOCK	1	UN	03012825		85639573	

INTELLISYSTM OPTION CB CARD

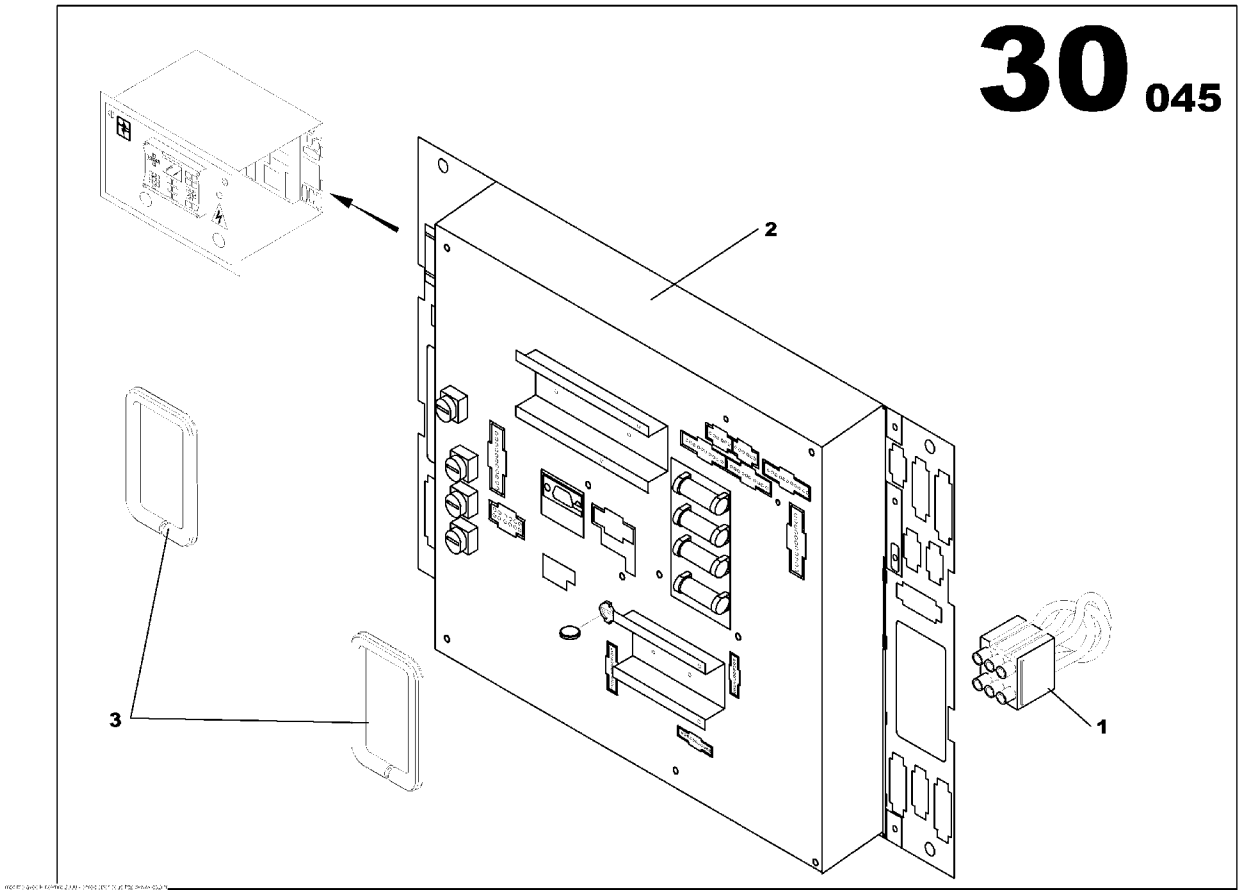

INTELLISYSTM OPTION CB CARD
85411551

Part numbers listed are only parts used in this model

Item	Part No.	Description	Qty	Un	From SN	To SN	Order PN	Page
1	85504033	WIRING LOOM C35S	1	UN			85504033	
2	85639250	INTELLISYSTM CARD CB *-1.10G*	1	UN	04000934		85639250	175
3	85630515	LINEAR SEAL	0.2	ML			85630515	

INTELLISYSTM OPTION CB CARD

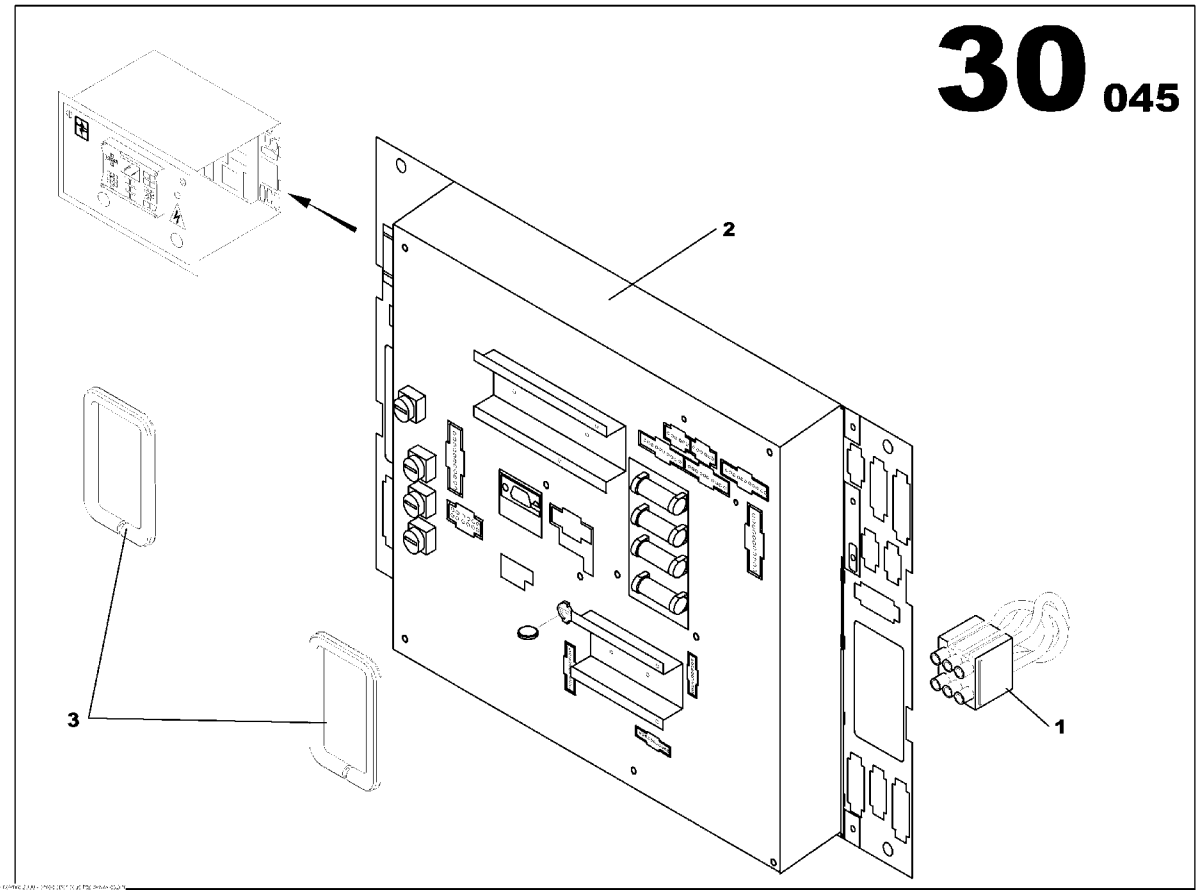

INTELLISYSTM OPTION CB CARD
85411551

Part numbers listed are only parts used in this model

Item	Part No.	Description	Qty	Un	From SN	To SN	Order PN	Page
1	85504033	WIRING LOOM C35S	1	UN			85504033	
2	85639250	INTELLISYSTM CARD CB *-1.10G*	1	UN	04000934		85639250	175
3	85630515	LINEAR SEAL	0.2	ML			85630515	

INTELLISYSTM CARD CB

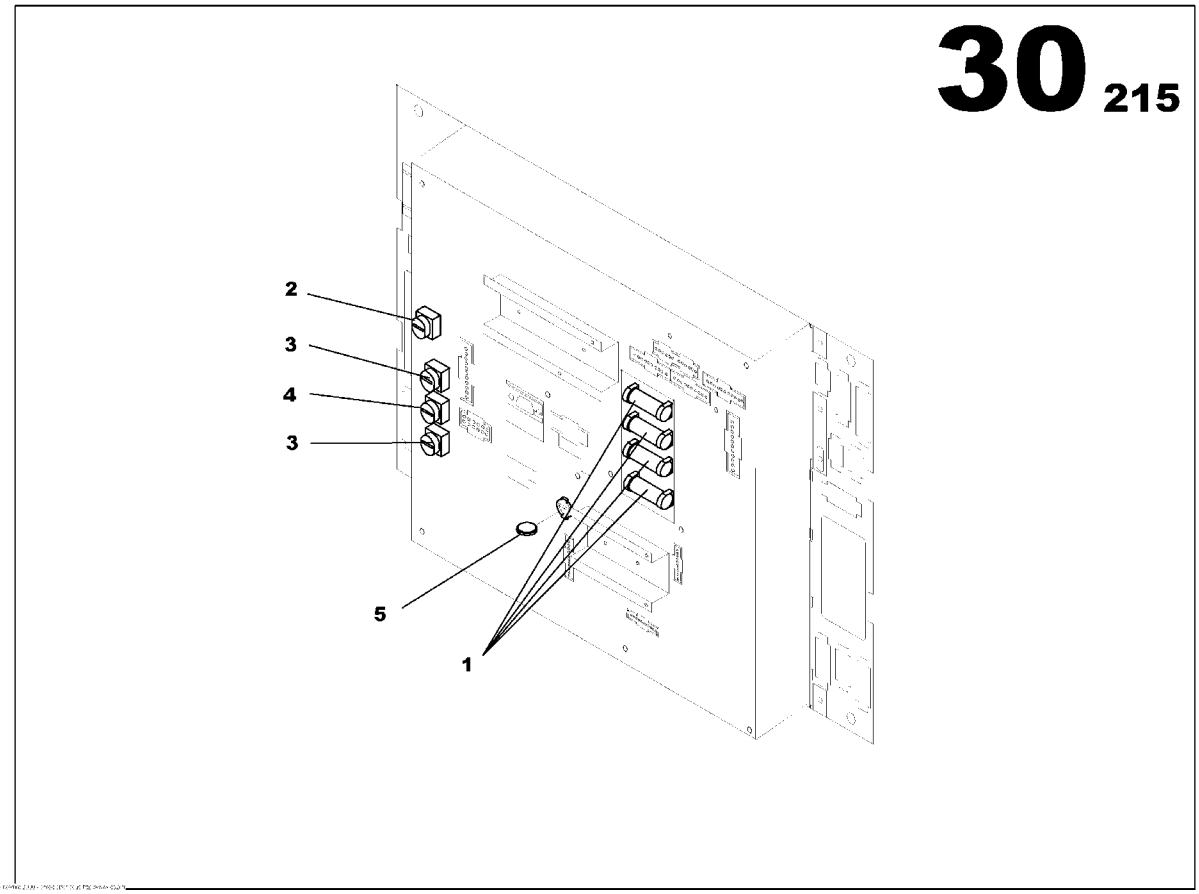

INTELLISYSTM CARD CB
85639250

Part numbers listed are only parts used in this model

Item	Part No.	Description	Qty	Un	From SN	To SN	Order PN	Page
1	85426112	FUSE CYLINDRICAL 12.5A	4	UN			85426112	
2	85426120	FUSE CYLINDRICAL 10A	1	UN			85426120	
3	85426138	FUSE CYLINDRICAL 1A	2	UN			85426138	
4	85426146	FUSE CYLINDRICAL 2,5A	1	UN			85426146	
5	85505154	CR2032 CELL	1	UN			85505154	

S2500 DASHBOARD OPTION

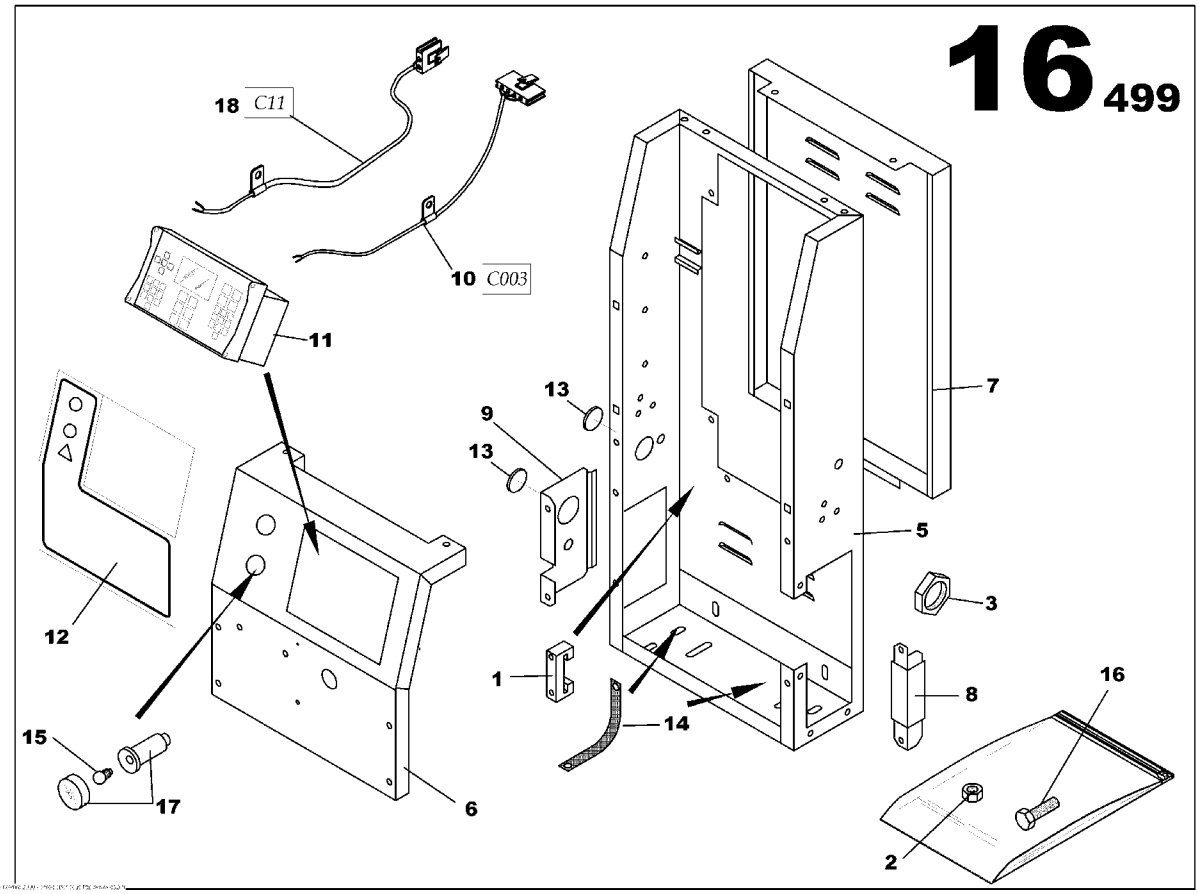

S2500 DASHBOARD OPTION
85636272

Part numbers listed are only parts used in this model

Item	Part No.	Description	Qty	Un	From SN	To SN	Order PN	Page
1	85634715	CONTROL PANEL SHEET METAL ASSEMBLY	1	UN			85634715	181
1	85408854	STOP	3	UN			85408854	
2	85408656	NUT M5	1	UN			85408656	
2	85636298	CONTROL PANEL ASSEMBLY	1	UN			85636298	183
3	85413276	GLAND NUT SCREW PG11	1	UN			85413276	
3	85636595	PLASTIC PLATE S2500 ASSEMBLY	1	UN			85636595	185
5	85636835	CONTROL PANEL S2500 HOUSING	1	UN			85636835	
6	85636843	CONTROL PANEL S2500 HOUSING	1	UN			85636843	
7	85636850	REAR CLOSURE CONTROL PANEL	1	UN			85636850	
8	85636868	SUPPORT PANEL	1	UN			85636868	
9	85635027	CABLE OUTLET PLATE	1	UN			85635027	
10	85504017	INTELLISYSTM WIRING LOOM 003	1	UN			85504017	
11	85623668	INTELLISYSTM DISPLAY *-IR PLATE SOFT 1.2*	1	UN			85627495	
12	85636587	PLASTIC PLATE L235xh245	1	UN			85636587	
13	85408391	RUBBER GROMMET D47	2	UN			85408391	
14	85505543	GROUND WIRES 16mm2	2	UN			85505543	
15	85402519	LAMP 12V BA9S TYPE	1	UN			85402519	
16	85636389	SCREW H M6x16	10	UN			85636389	
17	85503522	PANEL LIGHT CYLINDRIC D22	1	UN			85503522	
18	85504025	WIRING LOOM C11 L460	1	UN			85504025	

S2500 DASHBOARD OPTION

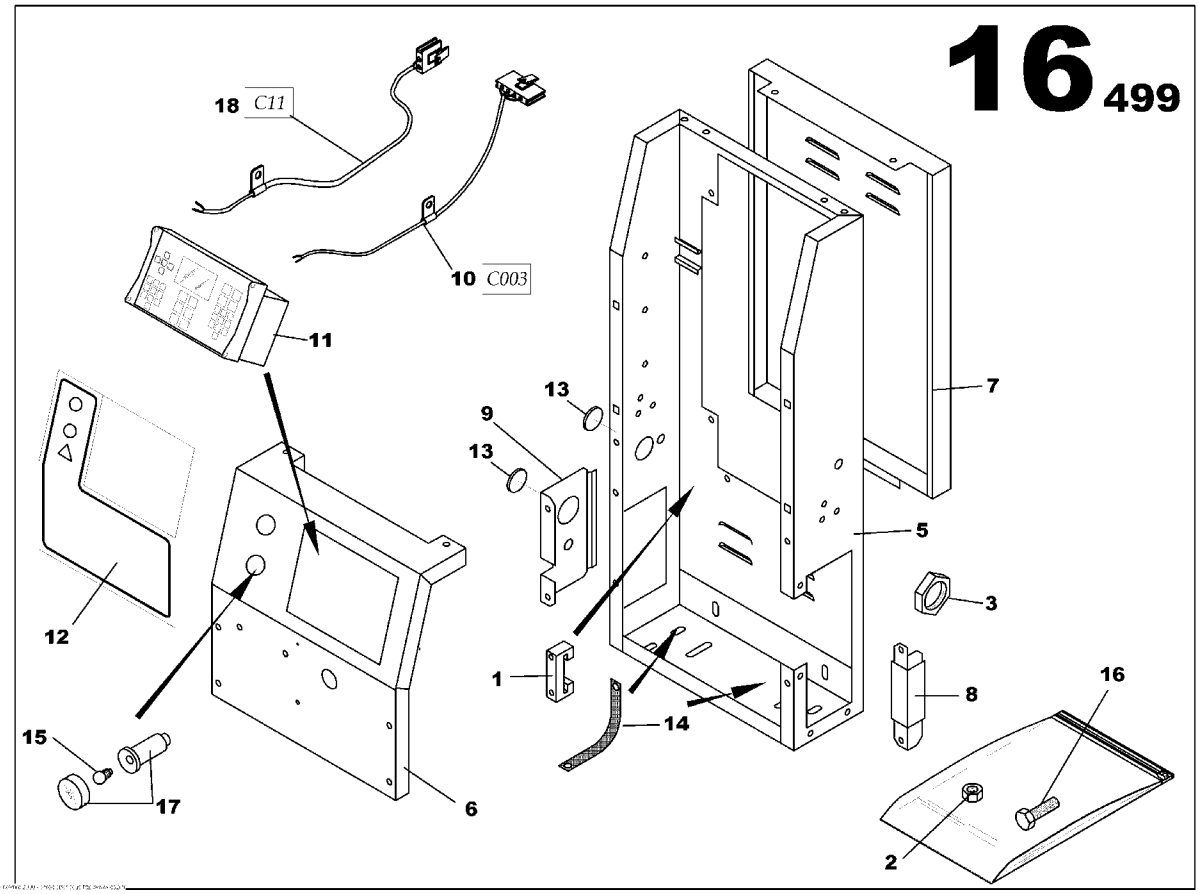

S2500 DASHBOARD OPTION
85636272

Part numbers listed are only parts used in this model

Item	Part No.	Description	Qty	Un	From SN	To SN	Order PN	Page
1	85634715	CONTROL PANEL SHEET METAL ASSEMBLY	1	UN			85634715	181
1	85408854	STOP	3	UN			85408854	
2	85408656	NUT M5	1	UN			85408656	
2	85636298	CONTROL PANEL ASSEMBLY	1	UN			85636298	183
3	85413276	GLAND NUT SCREW PG11	1	UN			85413276	
3	85636595	PLASTIC PLATE S2500 ASSEMBLY	1	UN			85636595	185
5	85636835	CONTROL PANEL S2500 HOUSING	1	UN			85636835	
6	85636843	CONTROL PANEL S2500 HOUSING	1	UN			85636843	
7	85636850	REAR CLOSURE CONTROL PANEL	1	UN			85636850	
8	85636868	SUPPORT PANEL	1	UN			85636868	
9	85635027	CABLE OUTLET PLATE	1	UN			85635027	
10	85504017	INTELLISYSTM WIRING LOOM 003	1	UN			85504017	
11	85623668	INTELLISYSTM DISPLAY *-IR PLATE SOFT 1.2*	1	UN			85627495	
12	85636587	PLASTIC PLATE L235xh245	1	UN			85636587	
13	85408391	RUBBER GROMMET D47	2	UN			85408391	
14	85505543	GROUND WIRES 16mm2	2	UN			85505543	
15	85402519	LAMP 12V BA9S TYPE	1	UN			85402519	
16	85636389	SCREW H M6x16	10	UN			85636389	
17	85503522	PANEL LIGHT CYLINDRIC D22	1	UN			85503522	
18	85504025	WIRING LOOM C11 L460	1	UN			85504025	

CONTROL PANEL SHEET METAL ASSEMBLY

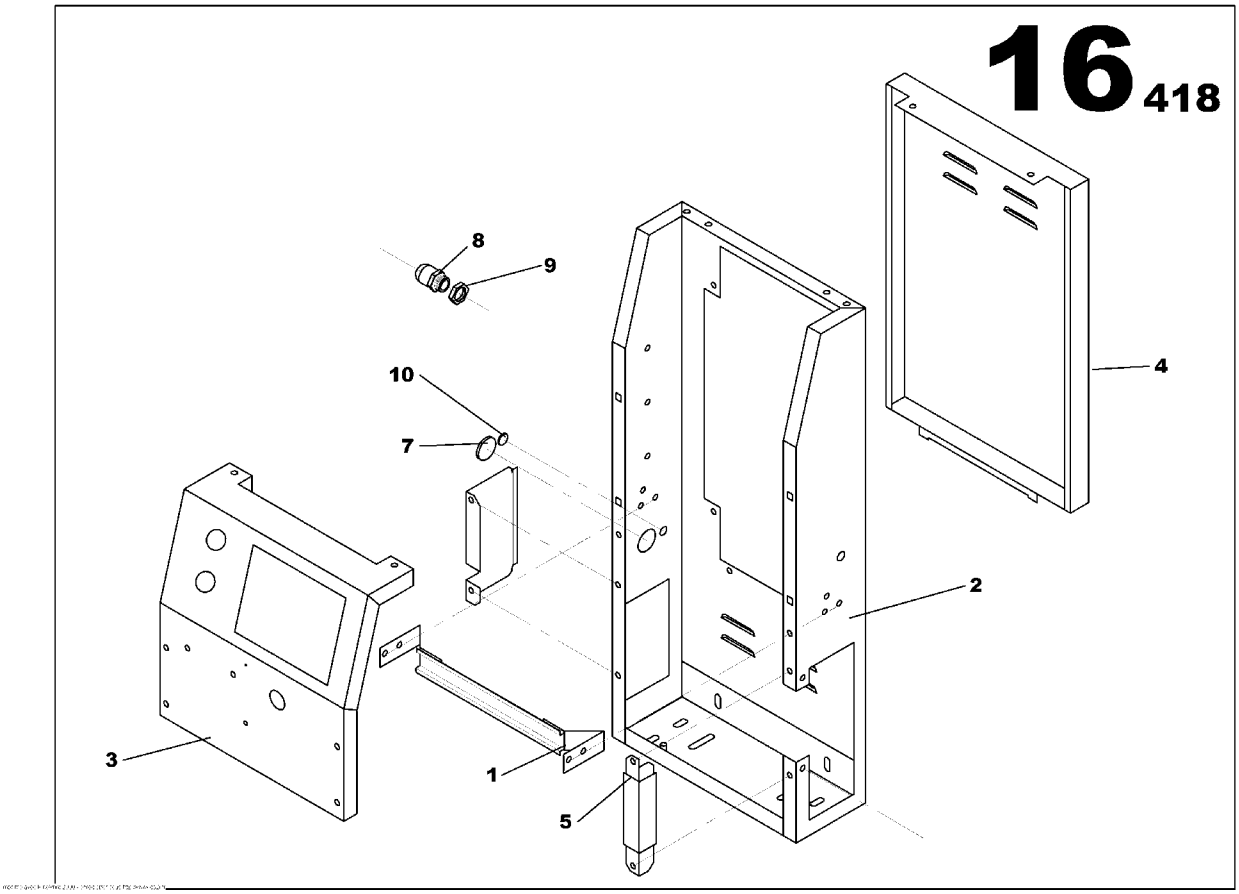

CONTROL PANEL SHEET METAL ASSEMBLY
85634715

Part numbers listed are only parts used in this model

Item	Part No.	Description	Qty	Un	From SN	To SN	Order PN	Page
1	85634632	ELECTRIC DIN RAIL	1	UN			85634632	
2	85634665	CONTROL PANEL S2500 HOUSING	1	UN			85634665	
3	85634673	CONTROL PANEL BRACKET	1	UN			85634673	
4	85634681	REAR CLOSURE PANEL S2500 CONTROL PANEL	1	UN			85634681	
5	85634699	SUPPORT PANEL S2500 CONTROL PANEL	1	UN			85634699	
6	85635027	CABLE OUTLET PLATE	1	UN			85635027	
7	85408391	RUBBER GROMMET D47	2	UN			85408391	
8	85635894	GLAND NUT PG13	1	UN			85635894	
9	85635902	PG13 NUT	1	UN			85635902	
10	85636694	RUBBER GROMMET D15	1	UN			85636694	

CONTROL PANEL ASSEMBLY

CONTROL PANEL ASSEMBLY
85636298

Part numbers listed are only parts used in this model

Item	Part No.	Description	Qty	Un	From SN	To SN	Order PN	Page

PLASTIC PLATE S2500 ASSEMBLY

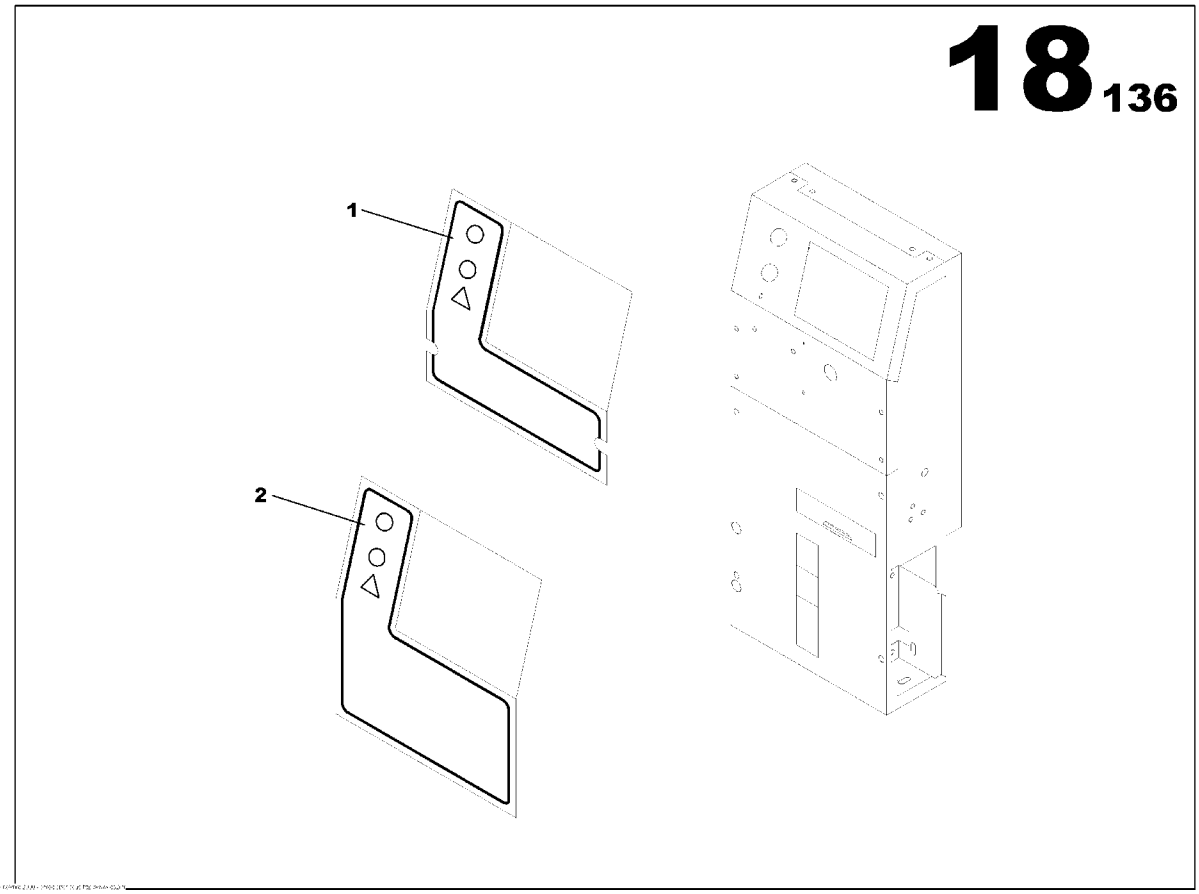

PLASTIC PLATE S2500 ASSEMBLY
85636595

Part numbers listed are only parts used in this model

Item	Part No.	Description	Qty	Un	From SN	To SN	Order PN	Page
1	85636587	PLASTIC PLATE L235xh245	1	UN			85636587	
2	85636611	PLASTIC PLATE L235xh325	1	UN			85636611	

TELYS 035 WIRING LOOM ASSEMBLY JD 6081

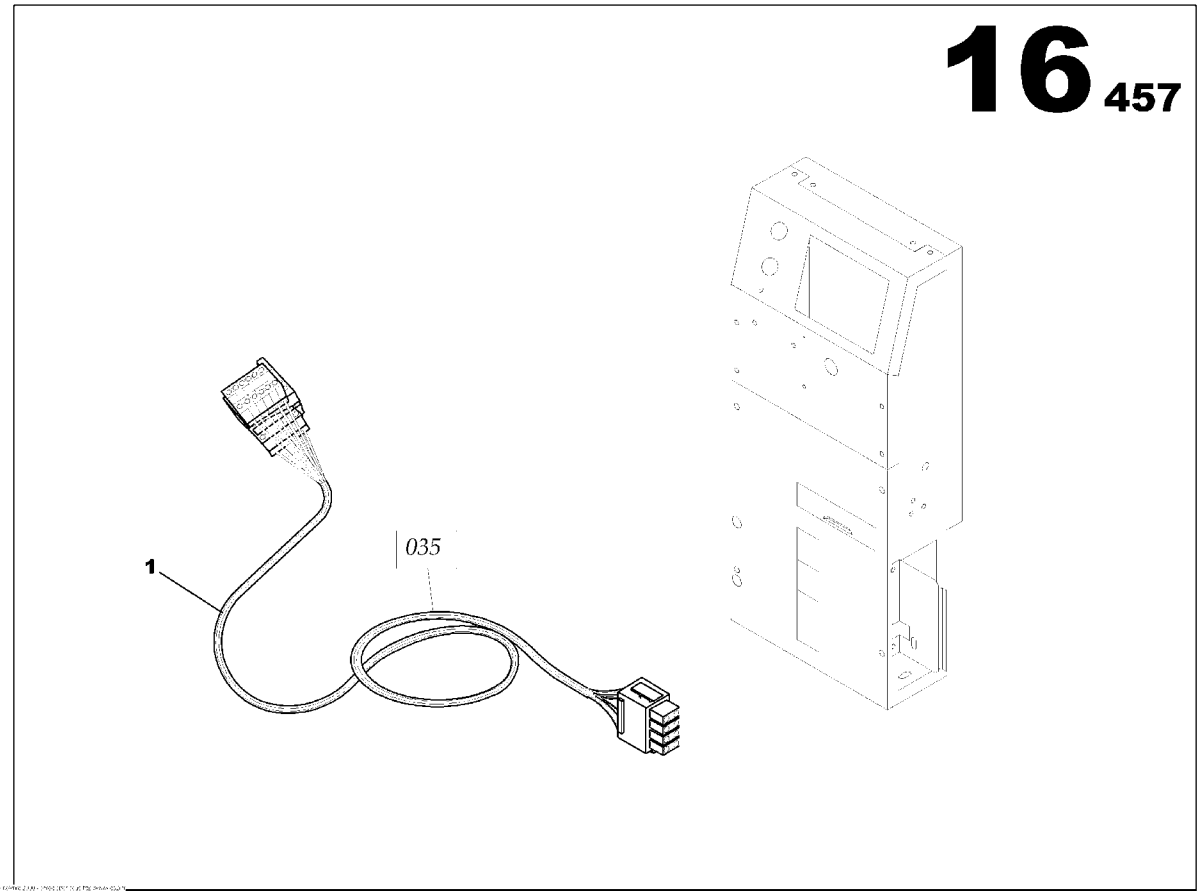

TELYS 035 WIRING LOOM ASSEMBLY JD 6081
85635415

Part numbers listed are only parts used in this model

Item	Part No.	Description	Qty	Un	From SN	To SN	Order PN	Page
1	85635308	INTELLISYSTM WIRING LOOM 035	1	UN	02010280		85635308	

AUTO START OPTION

Non illustré
Not illustrated

AUTO START OPTION

Part numbers listed are only parts used in this model

Item	Part No.	Description	Qty	Un	From SN	To SN	Order PN	Page
1	85414894	WATER PREHEATING ASSEMBLY	1	UN			85414894	191
2	85635225	TELYS 010 WIRING LOOM ASSEMBLY JD 6081	1	UN			85635225	193
3	85635357	ELECTRICAL SHAFT	1	ML			85635357	
4	85634616	EMERGENCY STOP PANEL ASSEMBLY	1	UN			85634616	195
5	85639599	DECALS TERMINAL BLOCK ASSEMBLY	1	UN			85639599	199
6	85411551	INTELLISYSTM OPTION CB CARD	1	UN			85411551	201
7	85636157	WATER PREHEATING OPTION	1	UN			85636157	207
8	85636181	EXTERNAL AMF PREDISPOSITION OPTION	1	UN			85636181	211
9	85636231	BATTERY CHARGER OPTION	1	UN			85636231	215
10	85636249	CURRENT SENSOR OPTION	1	UN			85636249	219
11	85636272	S2500 DASHBOARD OPTION	1	UN			85636272	223
12	17130741	INTELLISYSTM PARAMETER OPTION	1	UN			17130741	
13	85635845	AUXILIARY CONTACT ASSEMBLY	1	UN			85635845	233
14	85635399	TELYS 016 WIRING LOOM ASSEMBLY JD 6081	1	UN			85635399	235

WATER PREHEATING ASSEMBLY

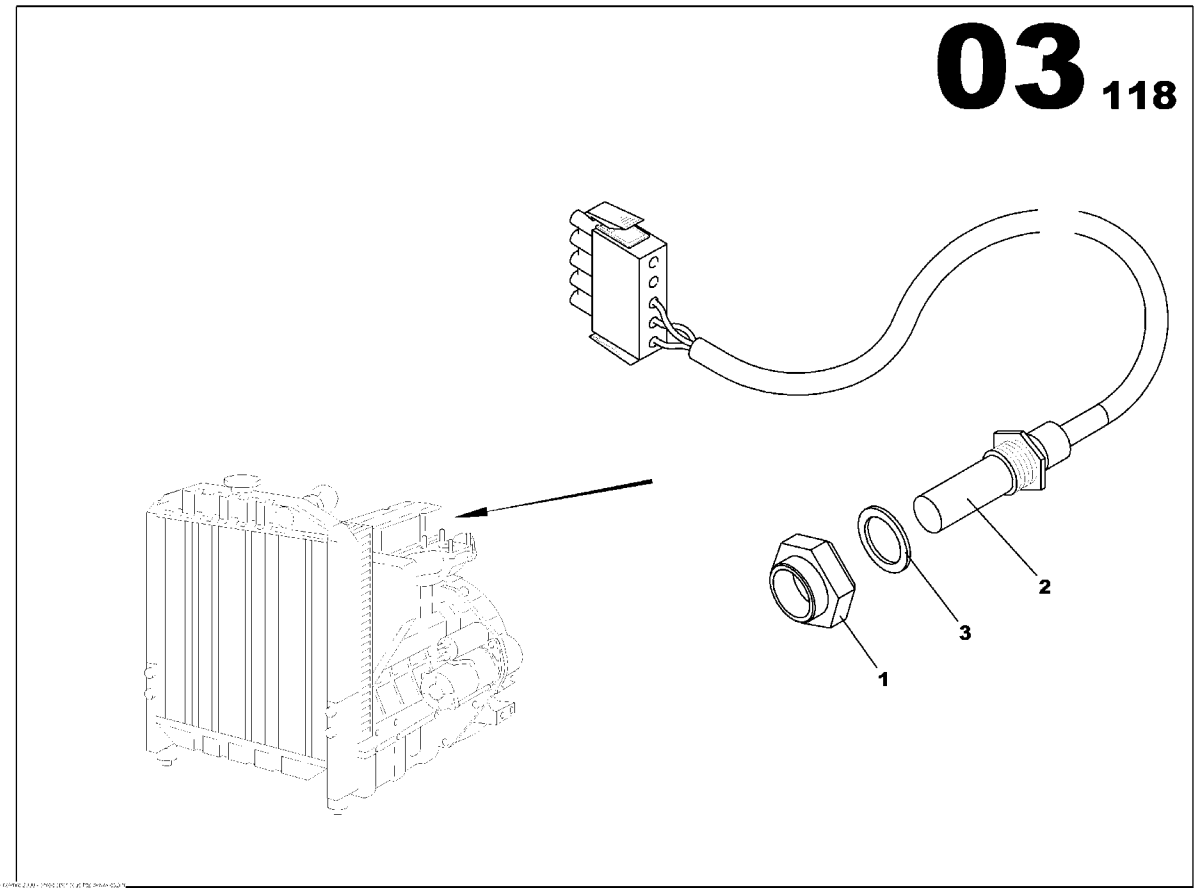

WATER PREHEATING ASSEMBLY
85414894

Part numbers listed are only parts used in this model

Item	Part No.	Description	Qty	Un	From SN	To SN	Order PN	Page
1	85413201	HEATING RESISTOR ADAPTATOR	1	UN			85413201	
2	85429157	COOLANT HEATER RESISTANCE 300W 240V	1	UN			85429157	
3	85413755	GASKET D20x26	1	UN			85413755	

TELYS 010 WIRING LOOM ASSEMBLY JD 6081

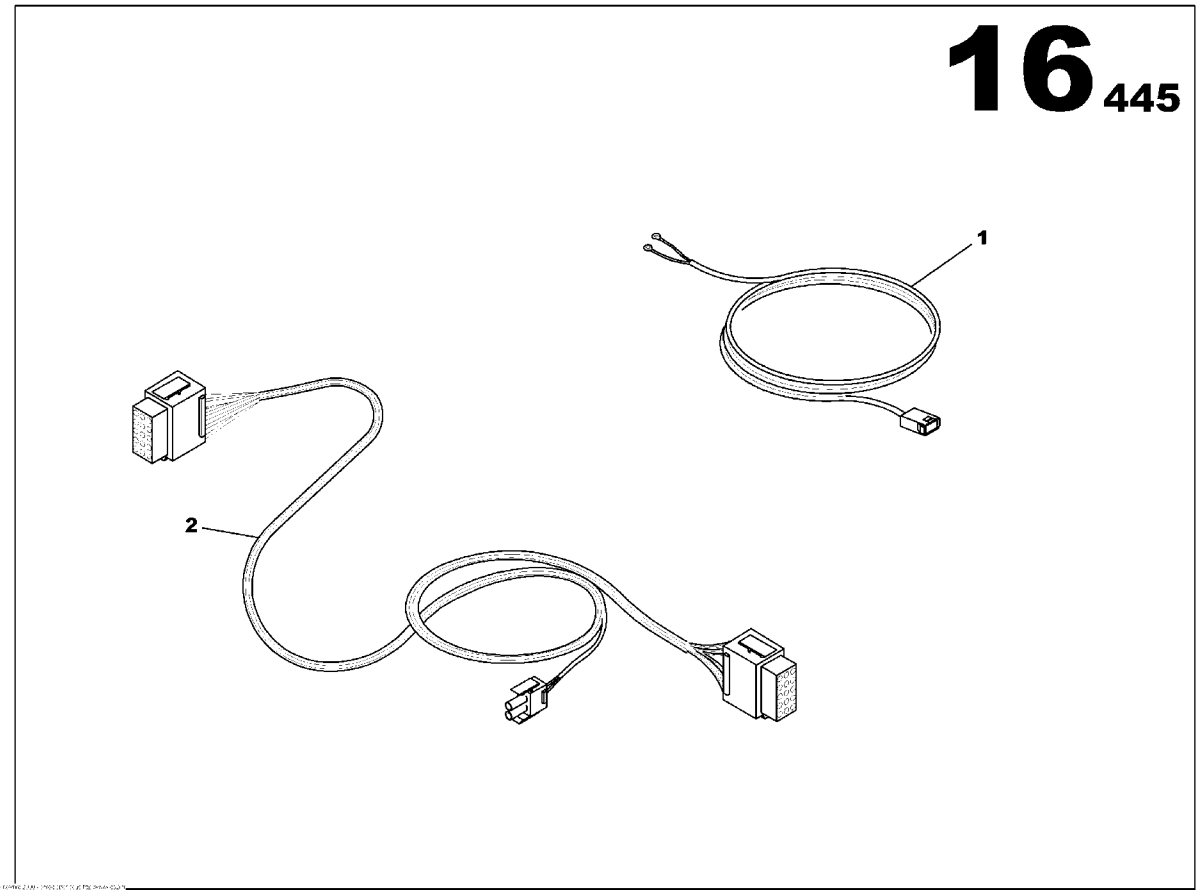

TELYS 010 WIRING LOOM ASSEMBLY JD 6081
85635225

Part numbers listed are only parts used in this model

Item	Part No.	Description	Qty	Un	From SN	To SN	Order PN	Page
1	85635183	INTELLISYSTM WIRING LOOM 010-BAT	1	UN			85635183	
2	85635209	INTELLISYSTM WIRING LOOM 010	1	UN			85635209	

EMERGENCY STOP PANEL ASSEMBLY

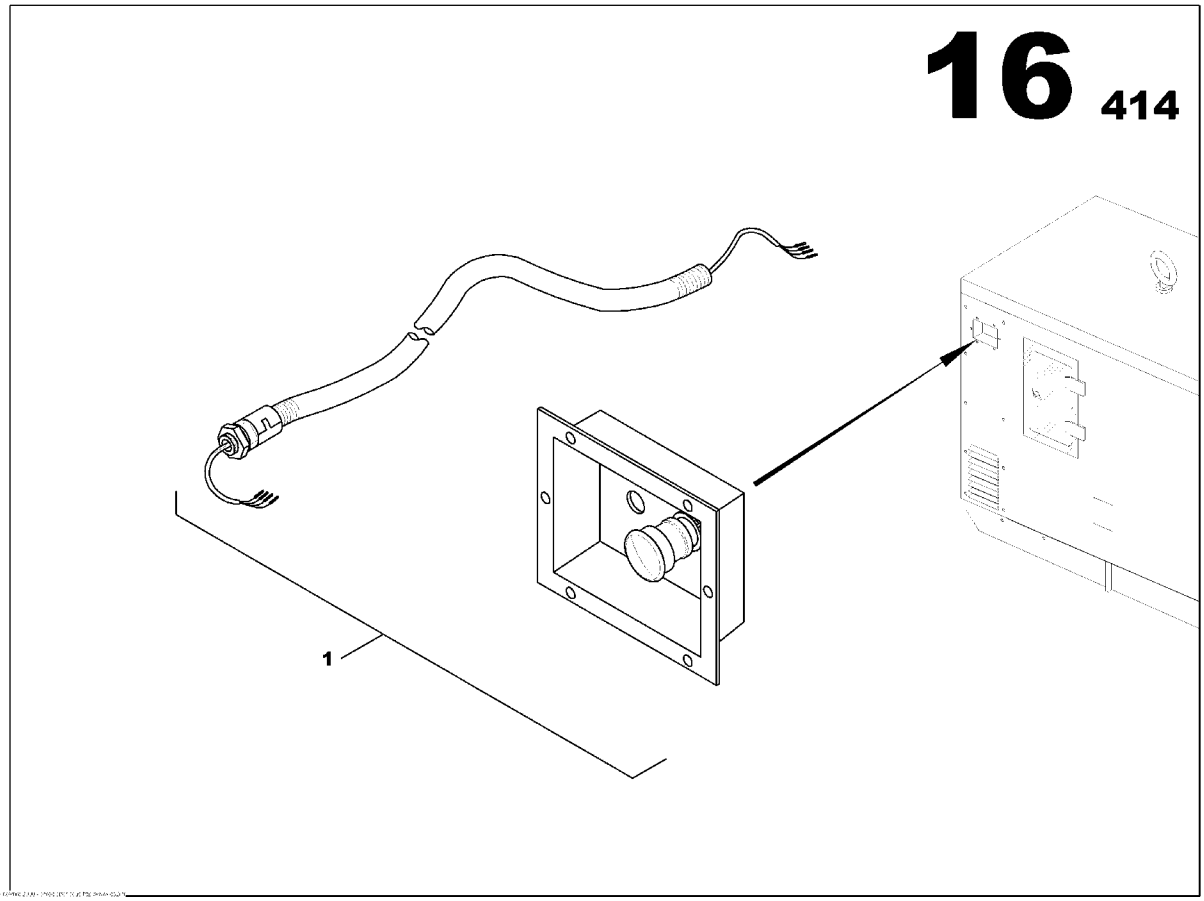

EMERGENCY STOP PANEL ASSEMBLY
85634616

Part numbers listed are only parts used in this model

Item	Part No.	Description	Qty	Un	From SN	To SN	Order PN	Page
1	85634624	EMERGENCY STOP PANEL ASSEMBLY	1	UN			85634624	197

EMERGENCY STOP PANEL ASSEMBLY

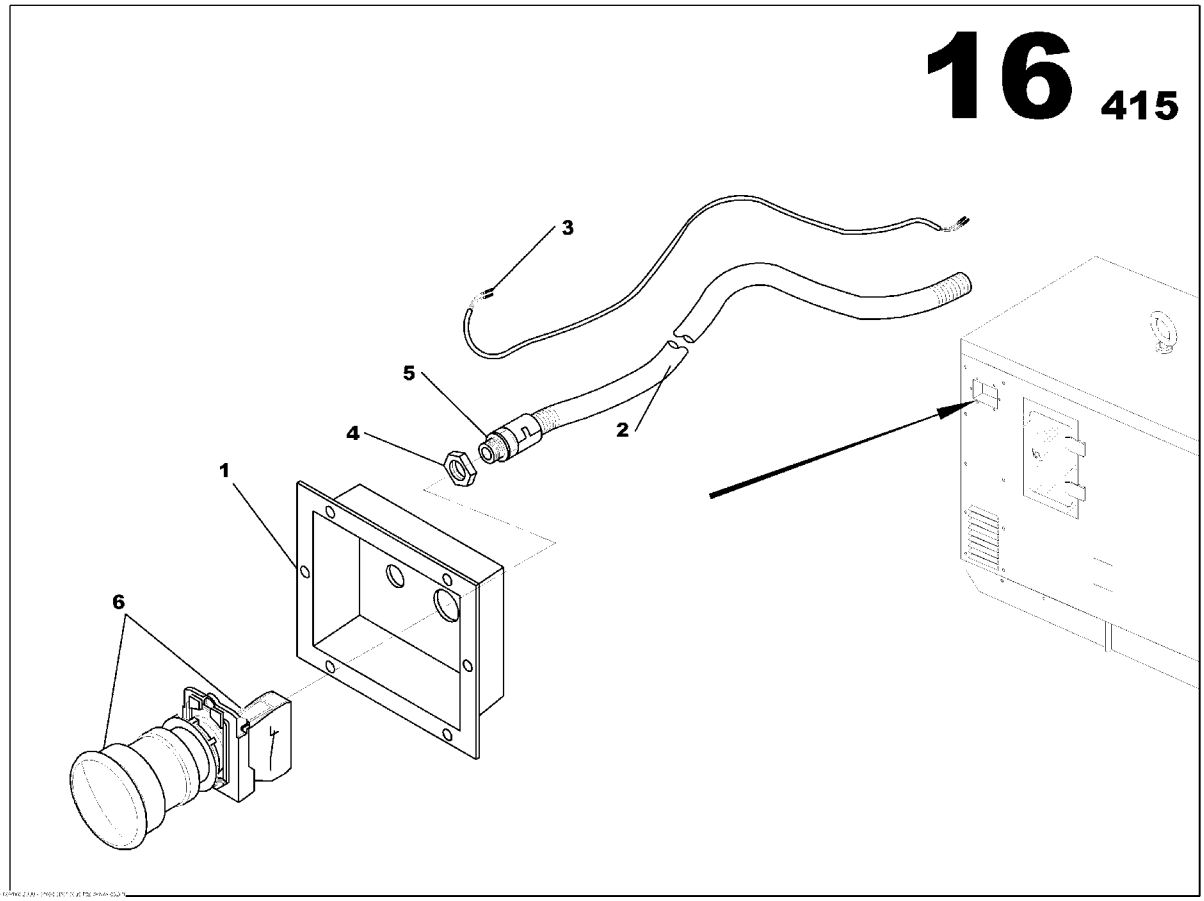

EMERGENCY STOP PANEL ASSEMBLY
85634624

Part numbers listed are only parts used in this model

Item	Part No.	Description	Qty	Un	From SN	To SN	Order PN	Page
1	85407294	EMERGENCY STOP PANEL	1	UN			85407294	
2	85635241	ELECTRICAL SHAFT D09	1.2	ML			85635241	
3	85635621	EMERGENCY STOP WIRING LOOM	1	UN			85635621	
4	85506061	GLAND NUT SCREW PG9	1	UN			85506061	
5	85499663	PIPE UNION PG9	1	UN			85499663	
6	85631422	EMERGENCY STOP BUTTON	1	UN			85631422	

DECALS TERMINAL BLOCK ASSEMBLY

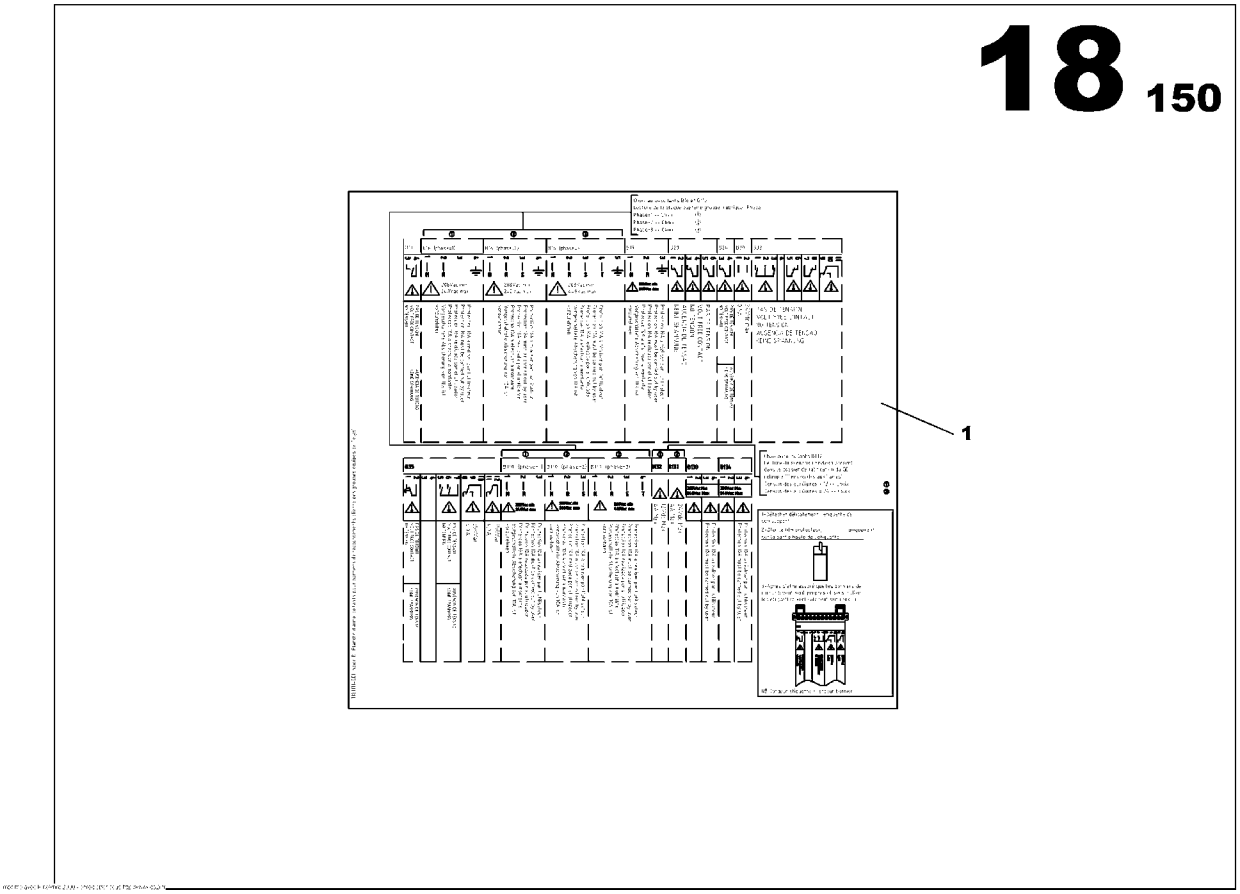

DECALS TERMINAL BLOCK ASSEMBLY
85639599

Part numbers listed are only parts used in this model

Item	Part No.	Description	Qty	Un	From SN	To SN	Order PN	Page
1	85639573	STICKER TERMINAL BLOCK	1	UN	03012825		85639573	

INTELLISYSTM OPTION CB CARD

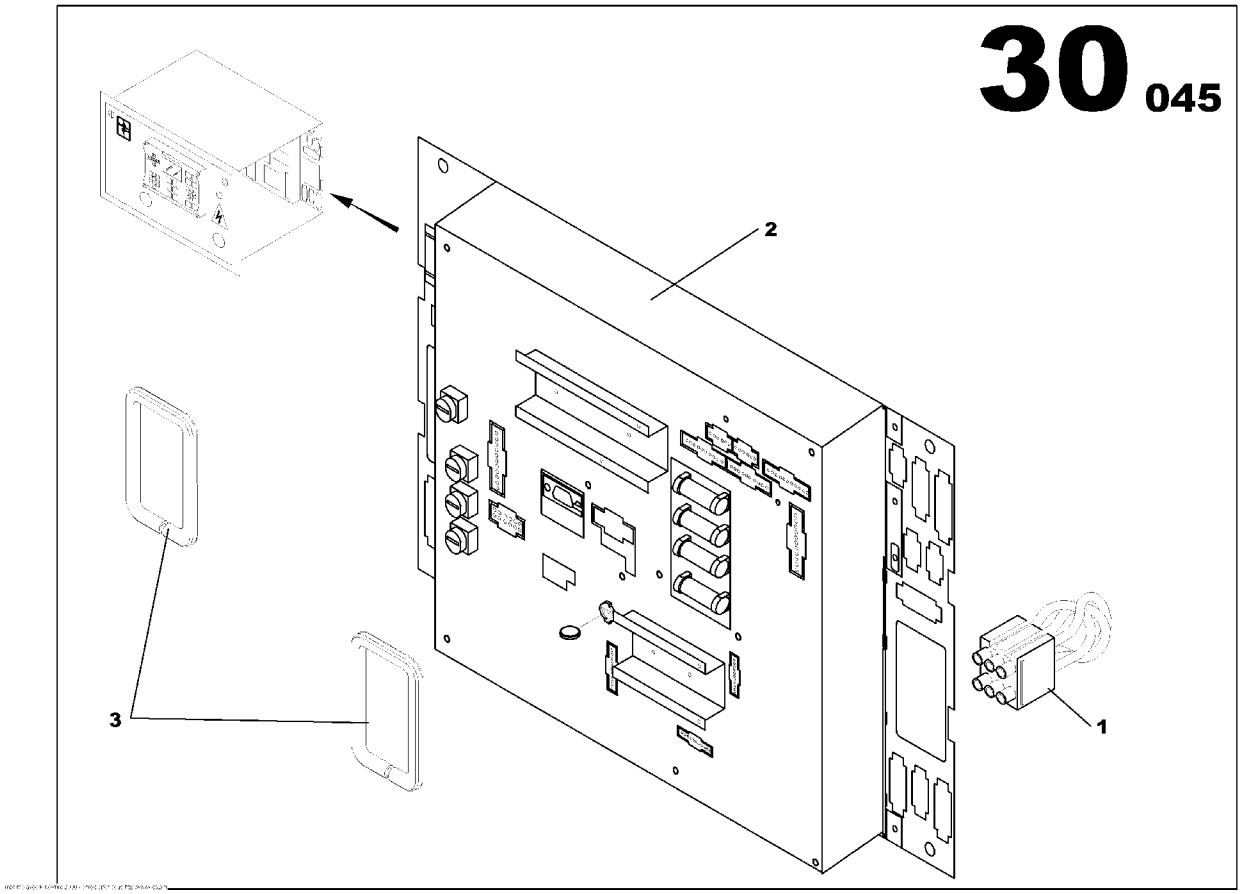

INTELLISYSTM OPTION CB CARD
85411551

Part numbers listed are only parts used in this model

Item	Part No.	Description	Qty	Un	From SN	To SN	Order PN	Page
1	85504033	WIRING LOOM C35S	1	UN			85504033	
2	85639250	INTELLISYSTM CARD CB *-1.10G*	1	UN	04000934		85639250	205
3	85630515	LINEAR SEAL	0.2	ML			85630515	

INTELLISYSTM OPTION CB CARD

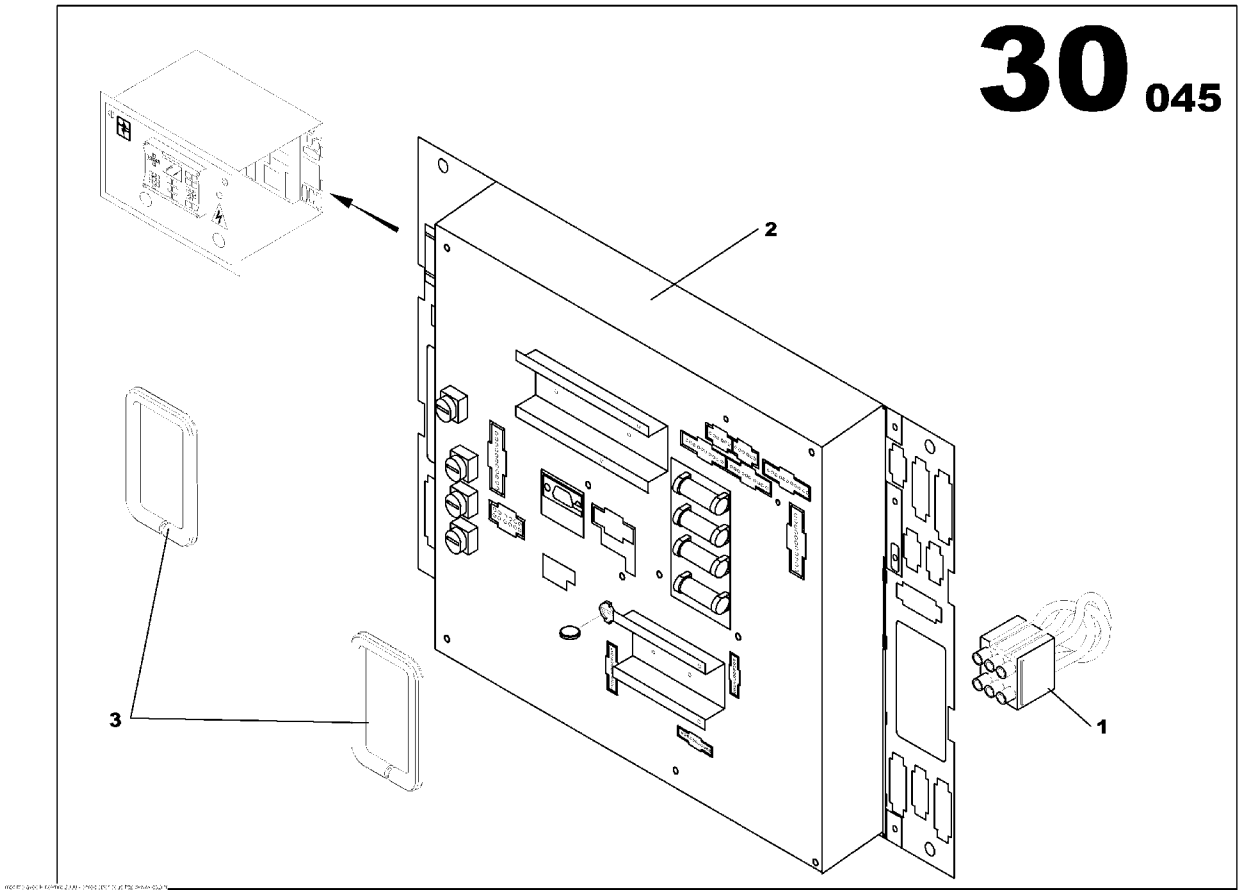

INTELLISYSTM OPTION CB CARD
85411551

Part numbers listed are only parts used in this model

Item	Part No.	Description	Qty	Un	From SN	To SN	Order PN	Page
1	85504033	WIRING LOOM C35S	1	UN			85504033	
2	85639250	INTELLISYSTM CARD CB *-1.10G*	1	UN	04000934		85639250	205
3	85630515	LINEAR SEAL	0.2	ML			85630515	

INTELLISYSTM CARD CB

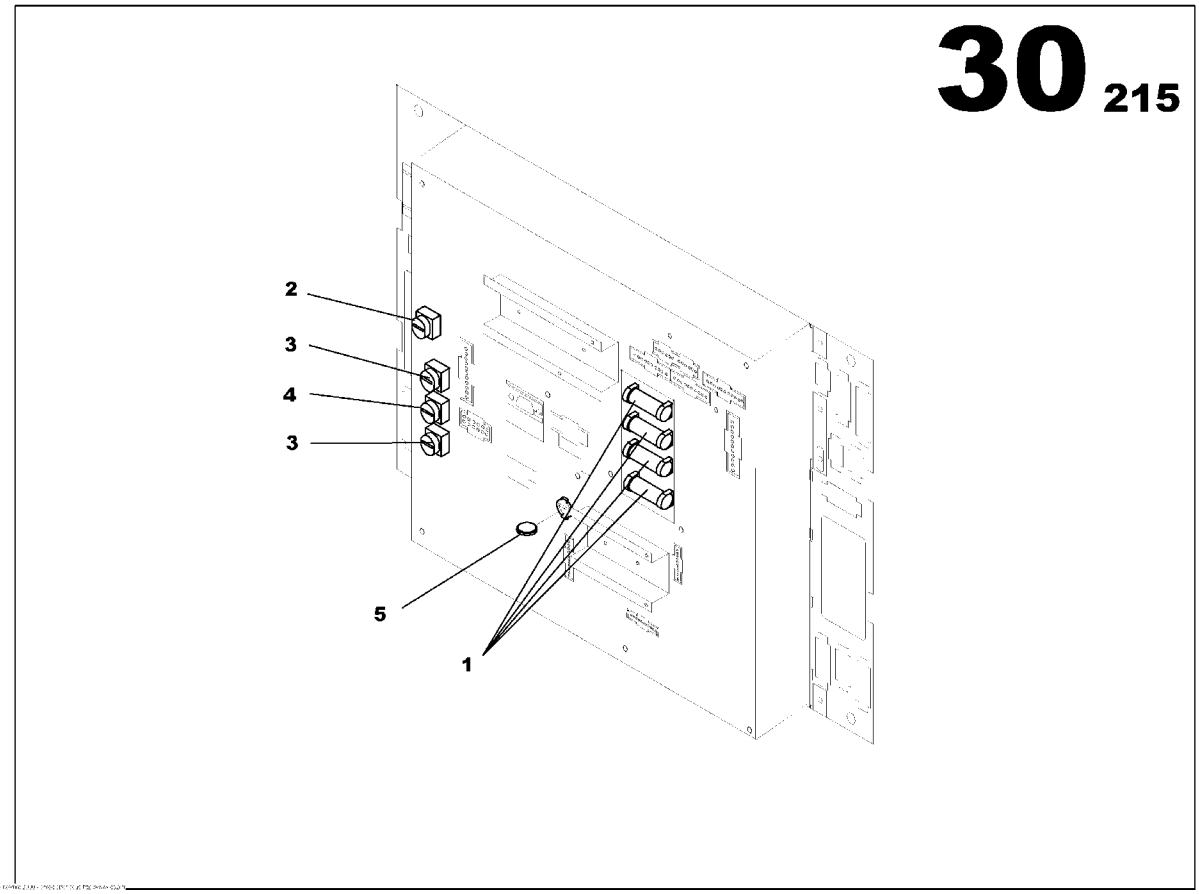

INTELLISYSTM CARD CB
85639250

Part numbers listed are only parts used in this model

Item	Part No.	Description	Qty	Un	From SN	To SN	Order PN	Page
1	85426112	FUSE CYLINDRICAL 12.5A	4	UN			85426112	
2	85426120	FUSE CYLINDRICAL 10A	1	UN			85426120	
3	85426138	FUSE CYLINDRICAL 1A	2	UN			85426138	
4	85426146	FUSE CYLINDRICAL 2,5A	1	UN			85426146	
5	85505154	CR2032 CELL	1	UN			85505154	

WATER PREHEATING OPTION

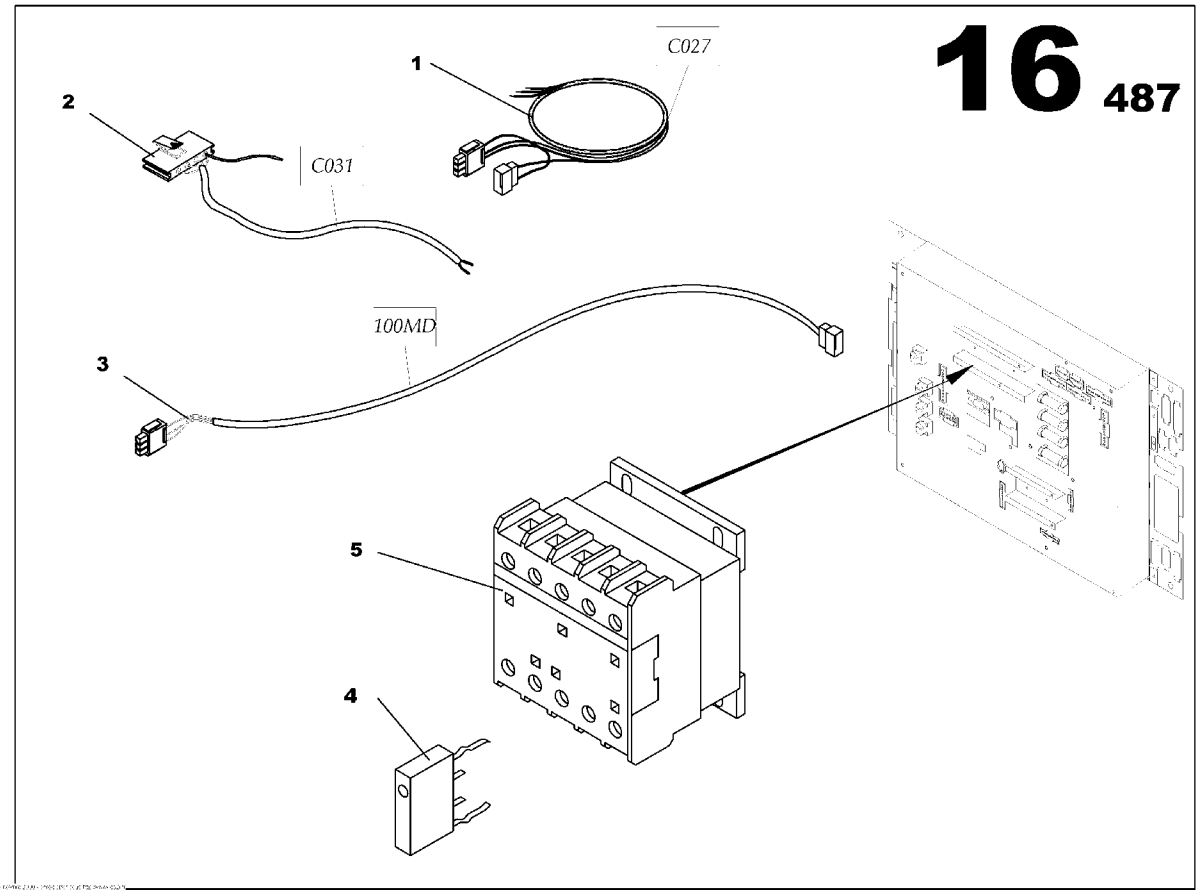

WATER PREHEATING OPTION
85636157

Part numbers listed are only parts used in this model

Item	Part No.	Description	Qty	Un	From SN	To SN	Order PN	Page
1	85636918	INTELLISYSTM WIRING LOOM 027	1	UN			85636918	
2	85506517	WIRING LOOM C031/33/34	1	UN			85506517	
3	85636926	INTELLISYSTM WIRING LOOM 028	1	UN			85636926	
4	85506640	SURGE SUPRESSOR BLOCK	1	UN			85506640	
5	85506657	CONTACTOR	1	UN			85506657	

WATER PREHEATING OPTION

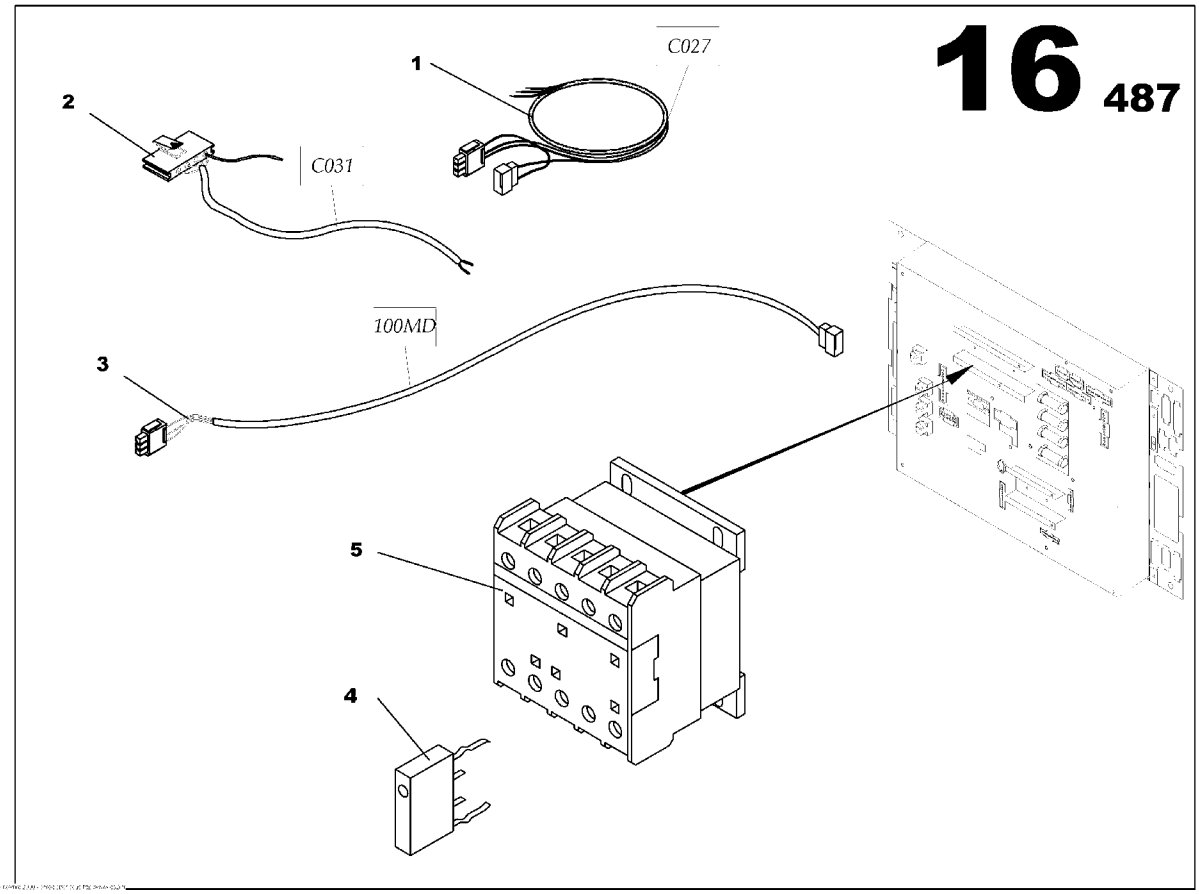

WATER PREHEATING OPTION
85636157

Part numbers listed are only parts used in this model

Item	Part No.	Description	Qty	Un	From SN	To SN	Order PN	Page
1	85636918	INTELLISYSTM WIRING LOOM 027	1	UN			85636918	
2	85506517	WIRING LOOM C031/33/34	1	UN			85506517	
3	85636926	INTELLISYSTM WIRING LOOM 028	1	UN			85636926	
4	85506640	SURGE SUPRESSOR BLOCK	1	UN			85506640	
5	85506657	CONTACTOR	1	UN			85506657	

EXTERNAL AMF PREDISPOSITION OPTION

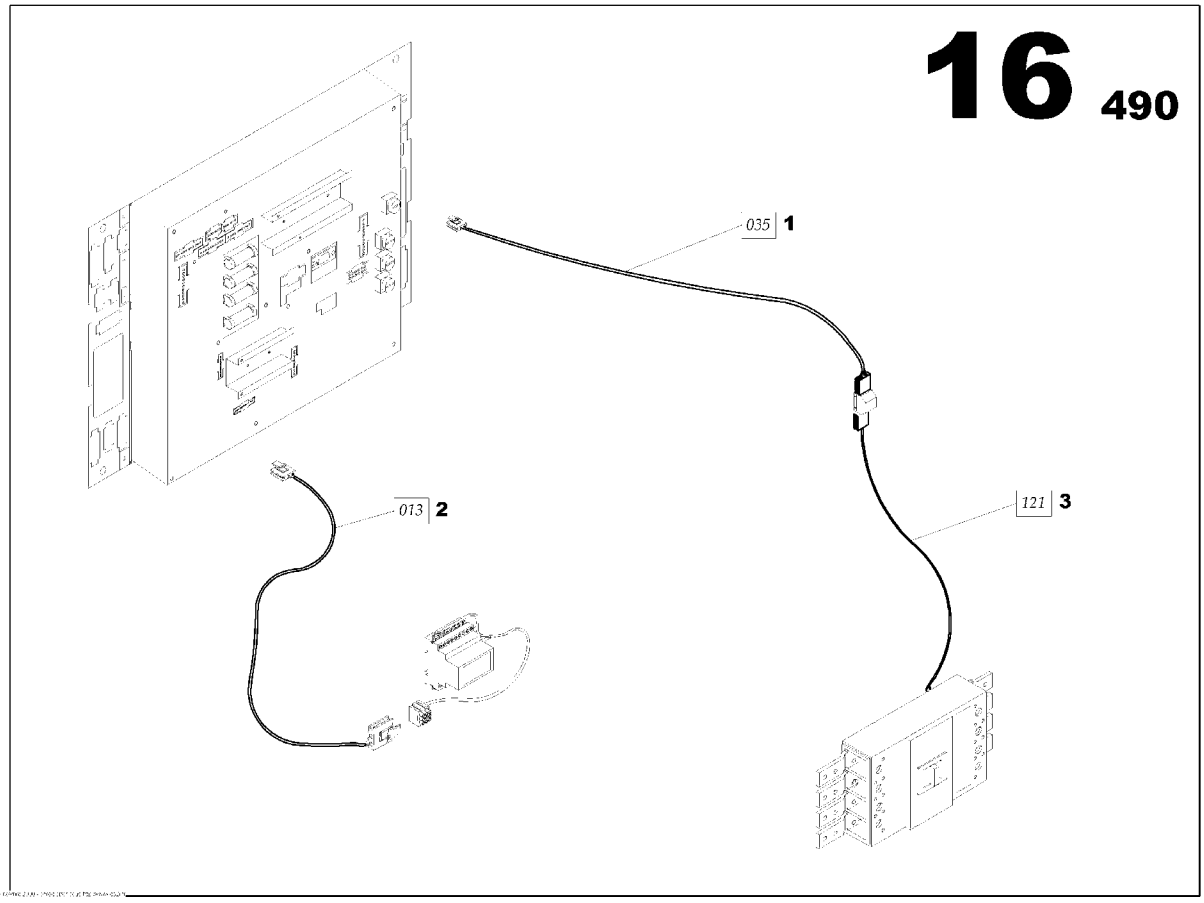

EXTERNAL AMF PREDISPOSITION OPTION
85636181

Part numbers listed are only parts used in this model

Item	Part No.	Description	Qty	Un	From SN	To SN	Order PN	Page
1	85635308	INTELLISYSTM WIRING LOOM 035	1	UN			85635308	
2	85636876	INTELLISYSTM WIRING LOOM 013	1	UN			85636876	
3	85636884	INTELLISYSTM WIRING LOOM 121	1	UN			85636884	

EXTERNAL AMF PREDISPOSITION OPTION

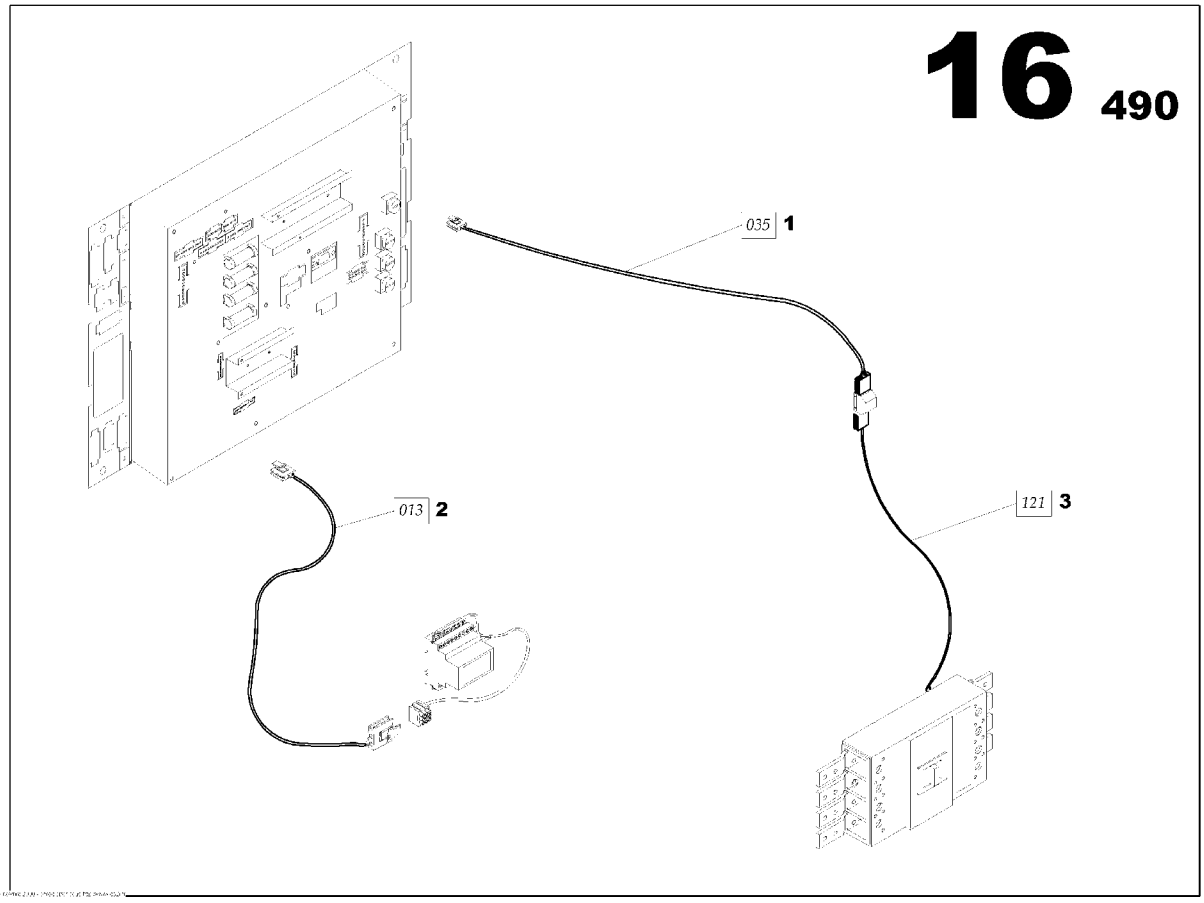

EXTERNAL AMF PREDISPOSITION OPTION
85636181

Part numbers listed are only parts used in this model

Item	Part No.	Description	Qty	Un	From SN	To SN	Order PN	Page
1	85635308	INTELLISYSTM WIRING LOOM 035	1	UN			85635308	
2	85636876	INTELLISYSTM WIRING LOOM 013	1	UN			85636876	
3	85636884	INTELLISYSTM WIRING LOOM 121	1	UN			85636884	

BATTERY CHARGER OPTION

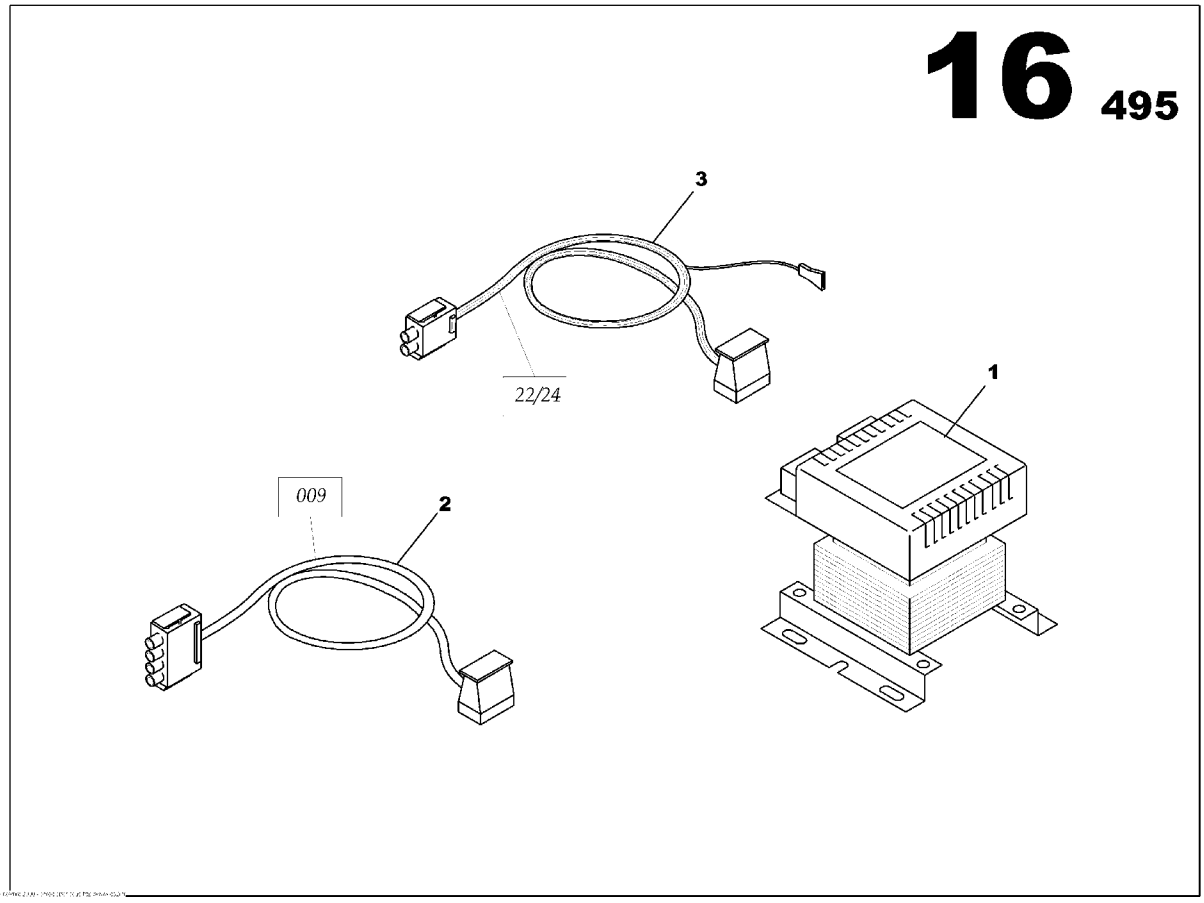

BATTERY CHARGER OPTION
85636231

Part numbers listed are only parts used in this model

Item	Part No.	Description	Qty	Un	From SN	To SN	Order PN	Page
1	85636975	BATTERY CHARGER	1	UN			85636975	
2	85636900	INTELLISYSTM WIRING LOOM 009	1	UN			85636900	
3	85506541	WIRING LOOM C022/024	1	UN			85506541	

BATTERY CHARGER OPTION

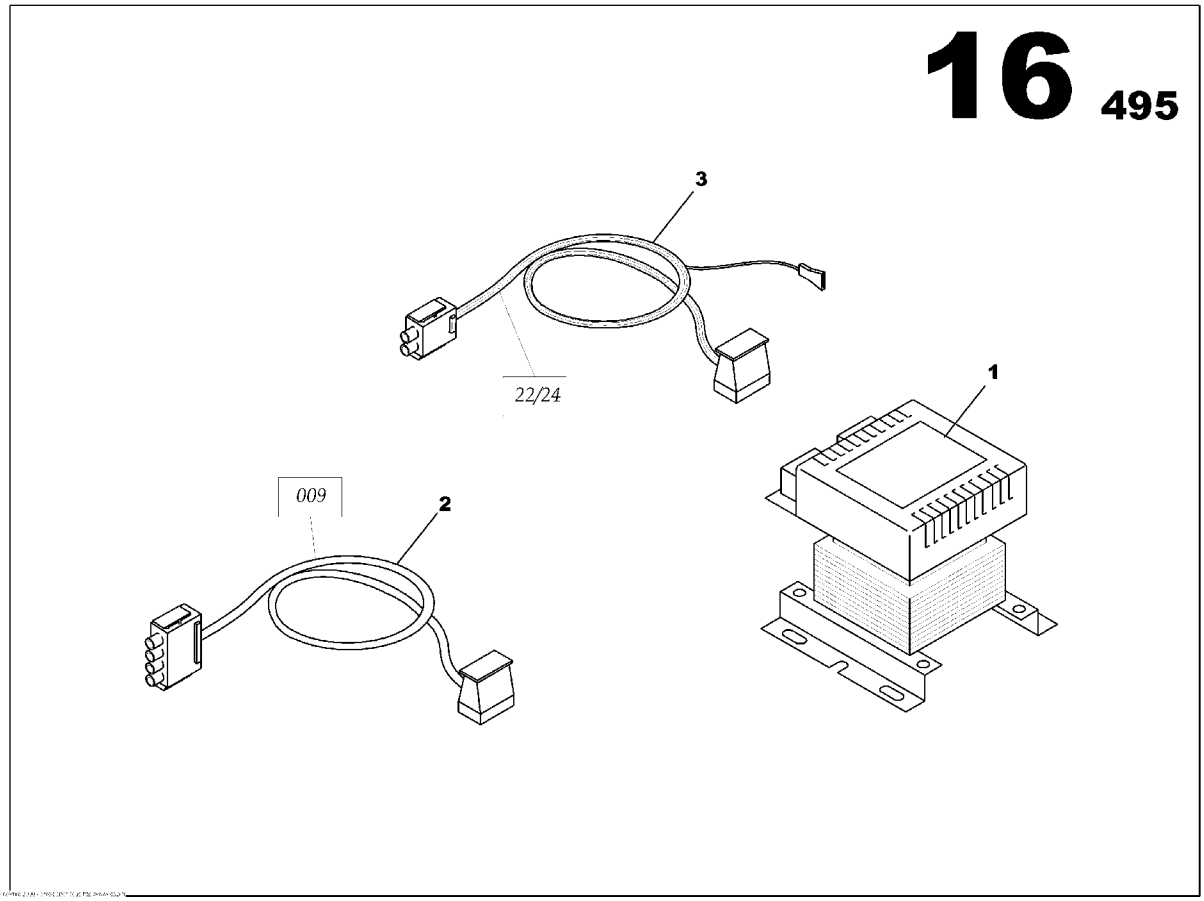

BATTERY CHARGER OPTION
85636231

Part numbers listed are only parts used in this model

Item	Part No.	Description	Qty	Un	From SN	To SN	Order PN	Page
1	85636975	BATTERY CHARGER	1	UN			85636975	
2	85636900	INTELLISYSTM WIRING LOOM 009	1	UN			85636900	
3	85506541	WIRING LOOM C022/024	1	UN			85506541	

CURRENT SENSOR OPTION

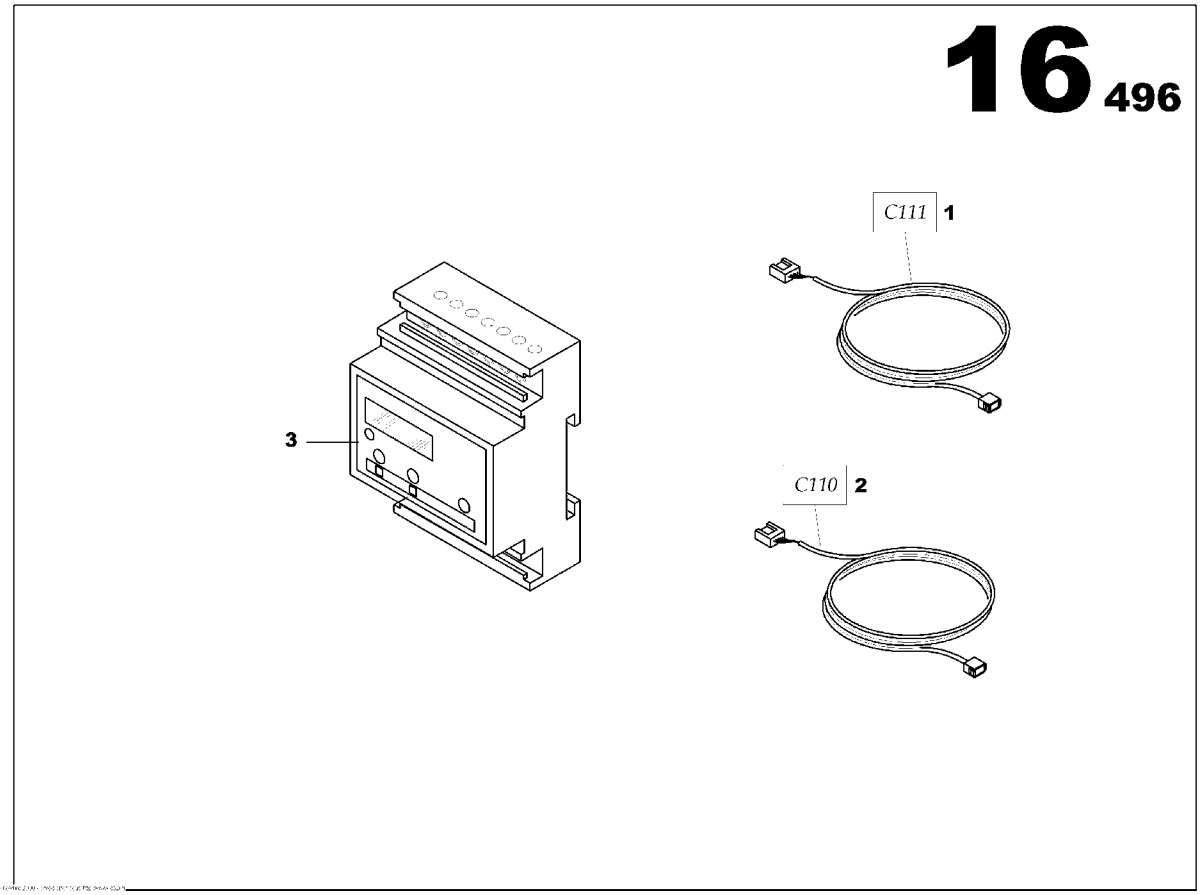

CURRENT SENSOR OPTION
85636249

Part numbers listed are only parts used in this model

Item	Part No.	Description	Qty	Un	From SN	To SN	Order PN	Page
1	85630663	WIRING LOOM C111 L800	1	UN			85630663	
2	85630721	WIRING LOOM C110 L300	1	UN			85630721	
3	85623809	CURRENT SENSOR MODULE	1	UN			85623809	

CURRENT SENSOR OPTION

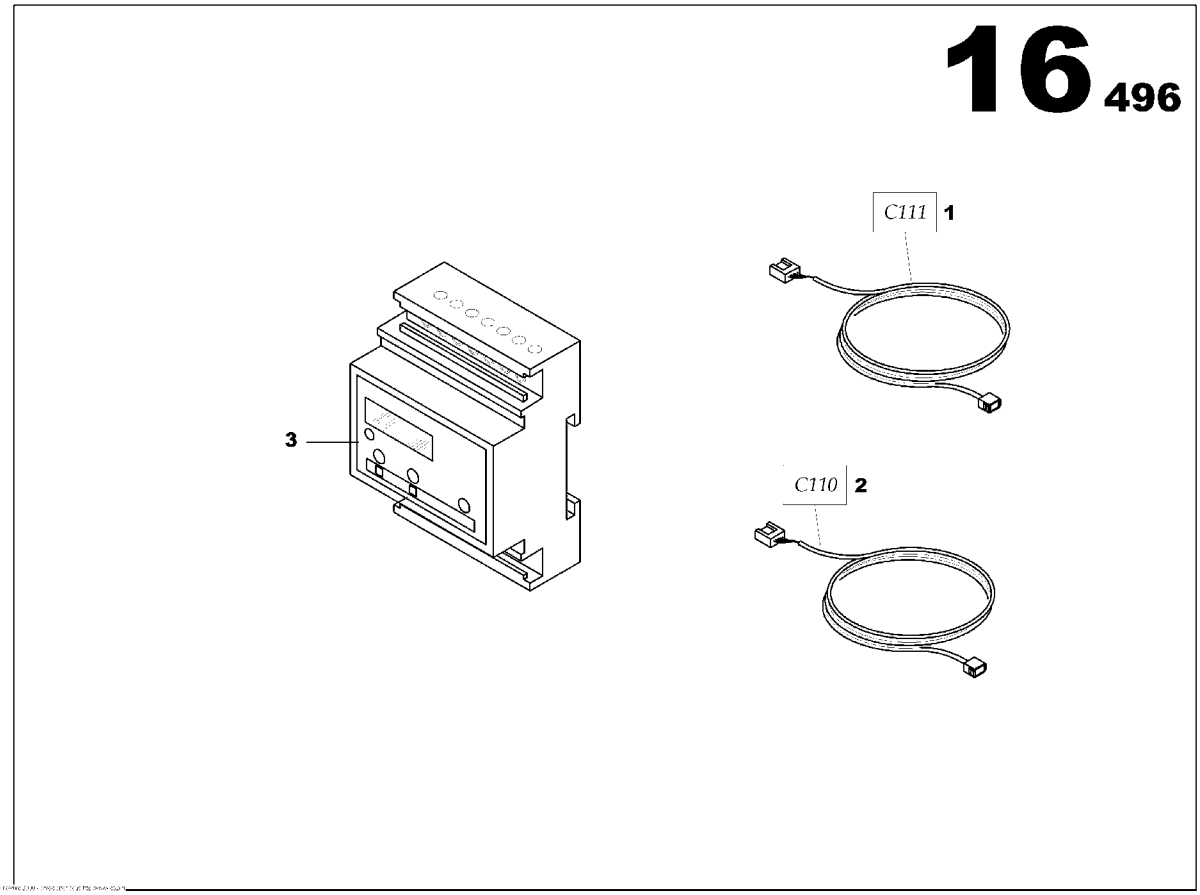

CURRENT SENSOR OPTION
85636249

Part numbers listed are only parts used in this model

Item	Part No.	Description	Qty	Un	From SN	To SN	Order PN	Page
1	85630663	WIRING LOOM C111 L800	1	UN			85630663	
2	85630721	WIRING LOOM C110 L300	1	UN			85630721	
3	85623809	CURRENT SENSOR MODULE	1	UN			85623809	

S2500 DASHBOARD OPTION

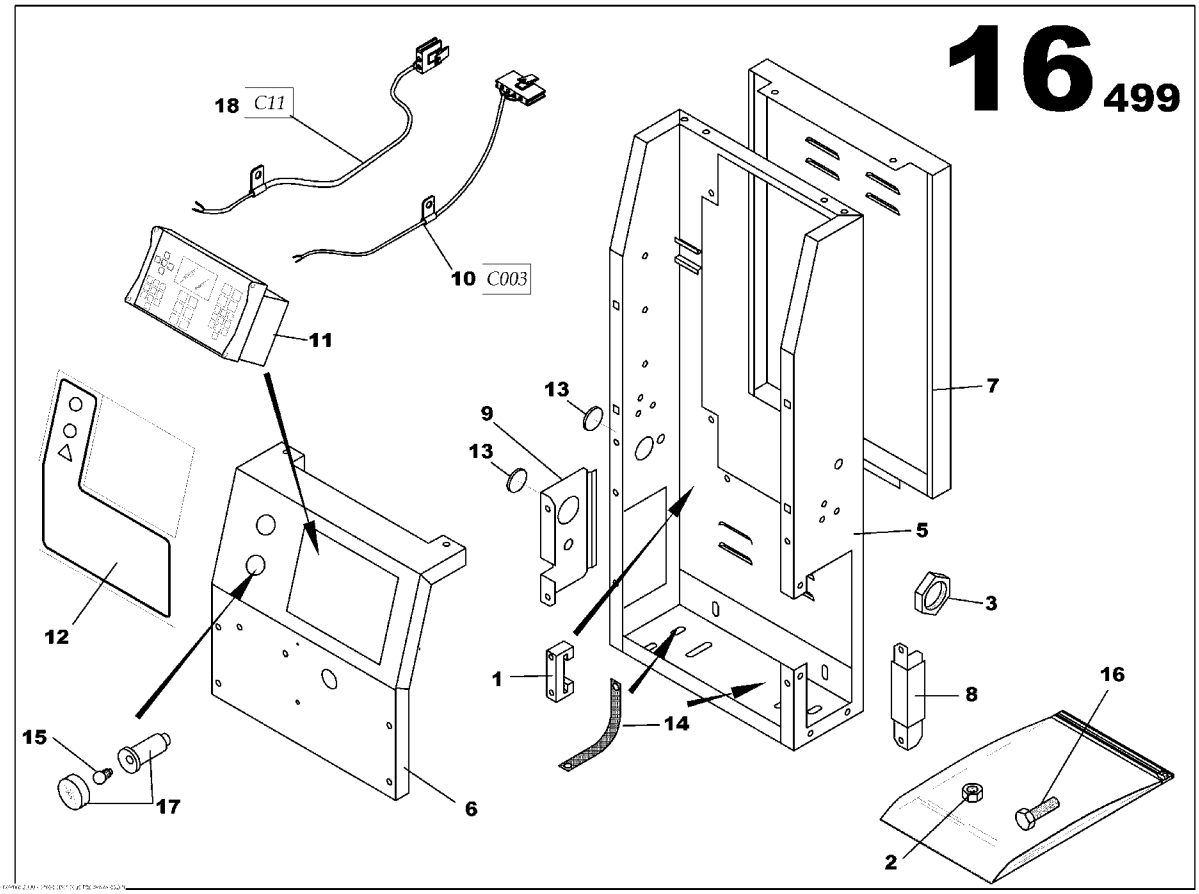

S2500 DASHBOARD OPTION
85636272

Part numbers listed are only parts used in this model

Item	Part No.	Description	Qty	Un	From SN	To SN	Order PN	Page
1	85634715	CONTROL PANEL SHEET METAL ASSEMBLY	1	UN			85634715	227
1	85408854	STOP	3	UN			85408854	
2	85408656	NUT M5	1	UN			85408656	
2	85636298	CONTROL PANEL ASSEMBLY	1	UN			85636298	229
3	85413276	GLAND NUT SCREW PG11	1	UN			85413276	
3	85636595	PLASTIC PLATE S2500 ASSEMBLY	1	UN			85636595	231
5	85636835	CONTROL PANEL S2500 HOUSING	1	UN			85636835	
6	85636843	CONTROL PANEL S2500 HOUSING	1	UN			85636843	
7	85636850	REAR CLOSURE CONTROL PANEL	1	UN			85636850	
8	85636868	SUPPORT PANEL	1	UN			85636868	
9	85635027	CABLE OUTLET PLATE	1	UN			85635027	
10	85504017	INTELLISYSTM WIRING LOOM 003	1	UN			85504017	
11	85623668	INTELLISYSTM DISPLAY *-IR PLATE SOFT 1.2*	1	UN			85627495	
12	85636587	PLASTIC PLATE L235xh245	1	UN			85636587	
13	85408391	RUBBER GROMMET D47	2	UN			85408391	
14	85505543	GROUND WIRES 16mm2	2	UN			85505543	
15	85402519	LAMP 12V BA9S TYPE	1	UN			85402519	
16	85636389	SCREW H M6x16	10	UN			85636389	
17	85503522	PANEL LIGHT CYLINDRIC D22	1	UN			85503522	
18	85504025	WIRING LOOM C11 L460	1	UN			85504025	

S2500 DASHBOARD OPTION

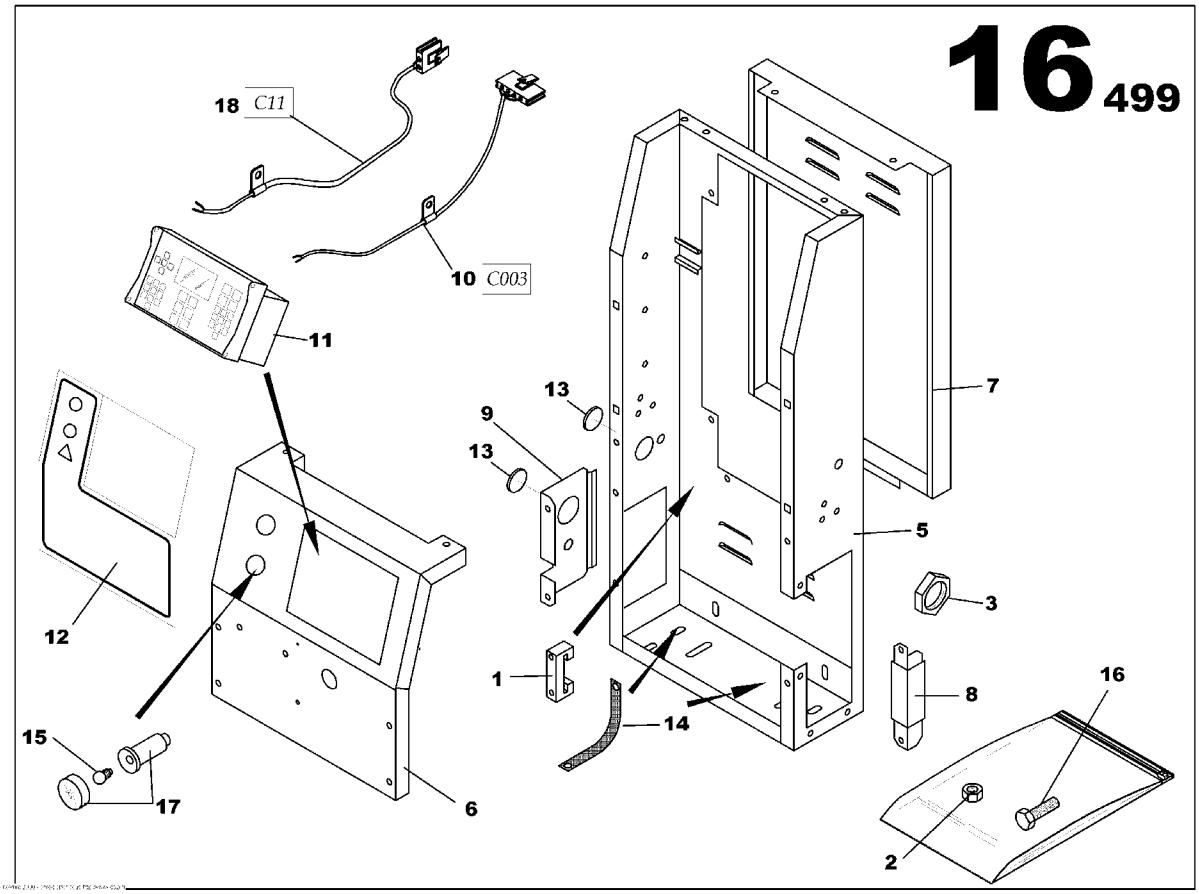

S2500 DASHBOARD OPTION
85636272

Part numbers listed are only parts used in this model

Item	Part No.	Description	Qty	Un	From SN	To SN	Order PN	Page
1	85634715	CONTROL PANEL SHEET METAL ASSEMBLY	1	UN			85634715	227
1	85408854	STOP	3	UN			85408854	
2	85408656	NUT M5	1	UN			85408656	
2	85636298	CONTROL PANEL ASSEMBLY	1	UN			85636298	229
3	85413276	GLAND NUT SCREW PG11	1	UN			85413276	
3	85636595	PLASTIC PLATE S2500 ASSEMBLY	1	UN			85636595	231
5	85636835	CONTROL PANEL S2500 HOUSING	1	UN			85636835	
6	85636843	CONTROL PANEL S2500 HOUSING	1	UN			85636843	
7	85636850	REAR CLOSURE CONTROL PANEL	1	UN			85636850	
8	85636868	SUPPORT PANEL	1	UN			85636868	
9	85635027	CABLE OUTLET PLATE	1	UN			85635027	
10	85504017	INTELLISYSTM WIRING LOOM 003	1	UN			85504017	
11	85623668	INTELLISYSTM DISPLAY *-IR PLATE SOFT 1.2*	1	UN			85627495	
12	85636587	PLASTIC PLATE L235xh245	1	UN			85636587	
13	85408391	RUBBER GROMMET D47	2	UN			85408391	
14	85505543	GROUND WIRES 16mm2	2	UN			85505543	
15	85402519	LAMP 12V BA9S TYPE	1	UN			85402519	
16	85636389	SCREW H M6x16	10	UN			85636389	
17	85503522	PANEL LIGHT CYLINDRIC D22	1	UN			85503522	
18	85504025	WIRING LOOM C11 L460	1	UN			85504025	

CONTROL PANEL SHEET METAL ASSEMBLY

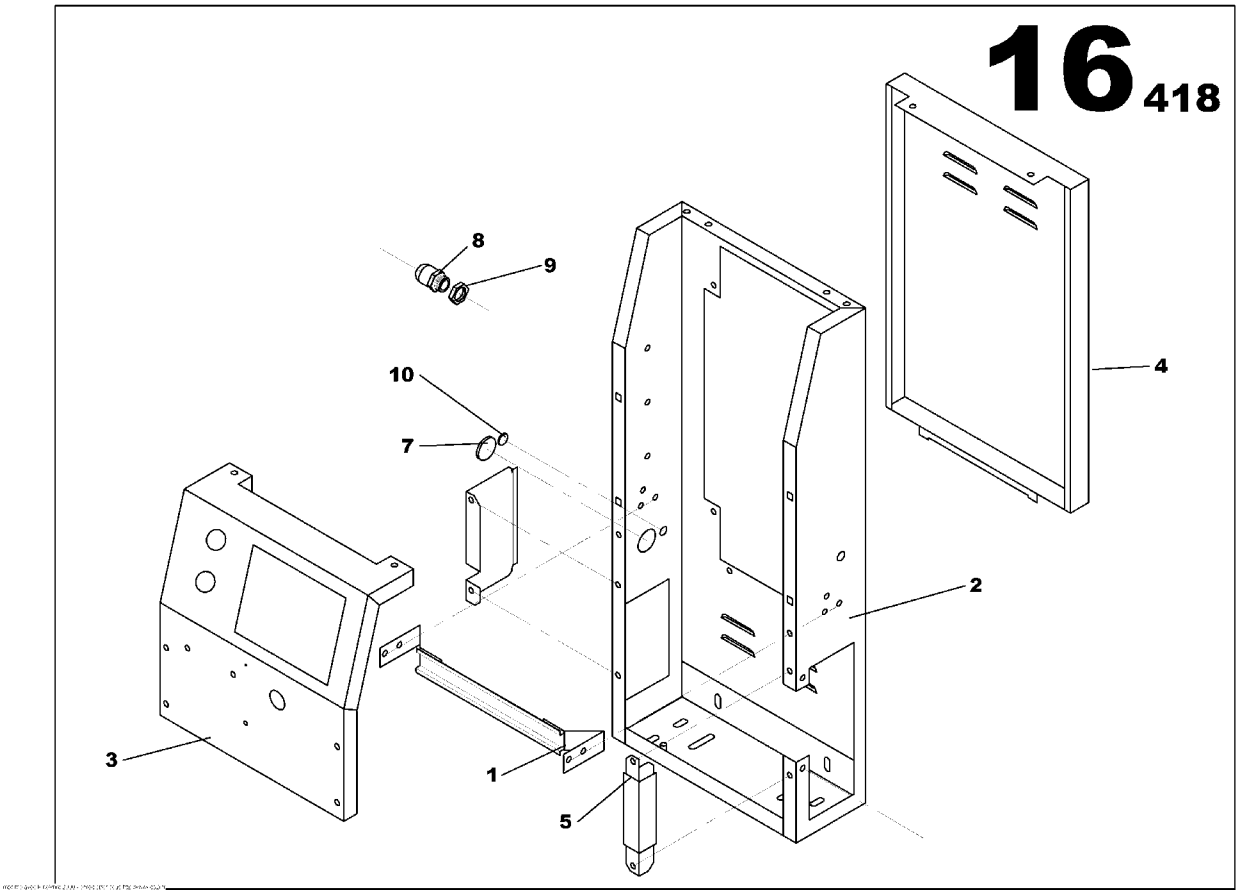

CONTROL PANEL SHEET METAL ASSEMBLY
85634715

Part numbers listed are only parts used in this model

Item	Part No.	Description	Qty	Un	From SN	To SN	Order PN	Page
1	85634632	ELECTRIC DIN RAIL	1	UN			85634632	
2	85634665	CONTROL PANEL S2500 HOUSING	1	UN			85634665	
3	85634673	CONTROL PANEL BRACKET	1	UN			85634673	
4	85634681	REAR CLOSURE PANEL S2500 CONTROL PANEL	1	UN			85634681	
5	85634699	SUPPORT PANEL S2500 CONTROL PANEL	1	UN			85634699	
6	85635027	CABLE OUTLET PLATE	1	UN			85635027	
7	85408391	RUBBER GROMMET D47	2	UN			85408391	
8	85635894	GLAND NUT PG13	1	UN			85635894	
9	85635902	PG13 NUT	1	UN			85635902	
10	85636694	RUBBER GROMMET D15	1	UN			85636694	

CONTROL PANEL ASSEMBLY

CONTROL PANEL ASSEMBLY
85636298

Part numbers listed are only parts used in this model

Item	Part No.	Description	Qty	Un	From SN	To SN	Order PN	Page

PLASTIC PLATE S2500 ASSEMBLY

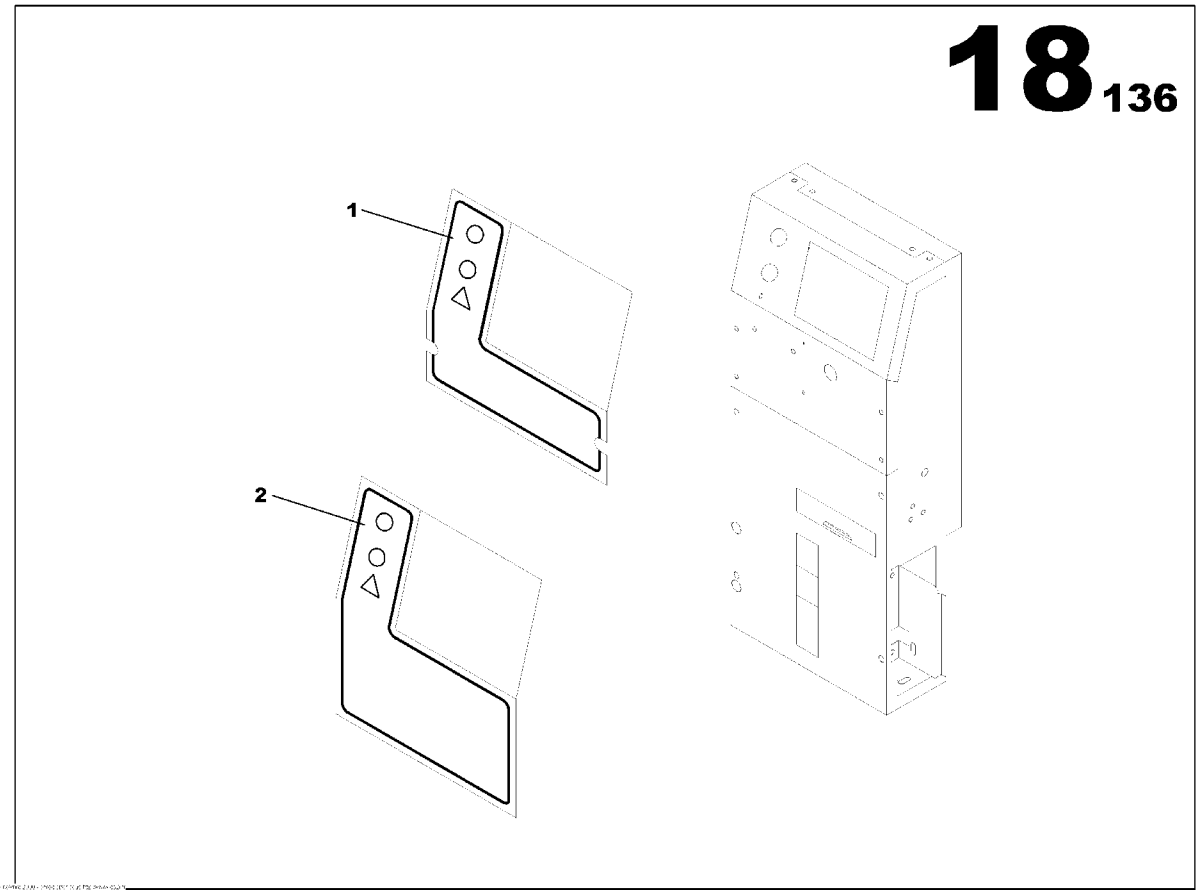

PLASTIC PLATE S2500 ASSEMBLY
85636595

Part numbers listed are only parts used in this model

Item	Part No.	Description	Qty	Un	From SN	To SN	Order PN	Page
1	85636587	PLASTIC PLATE L235xh245	1	UN			85636587	
2	85636611	PLASTIC PLATE L235xh325	1	UN			85636611	

AUXILIARY CONTACT ASSEMBLY

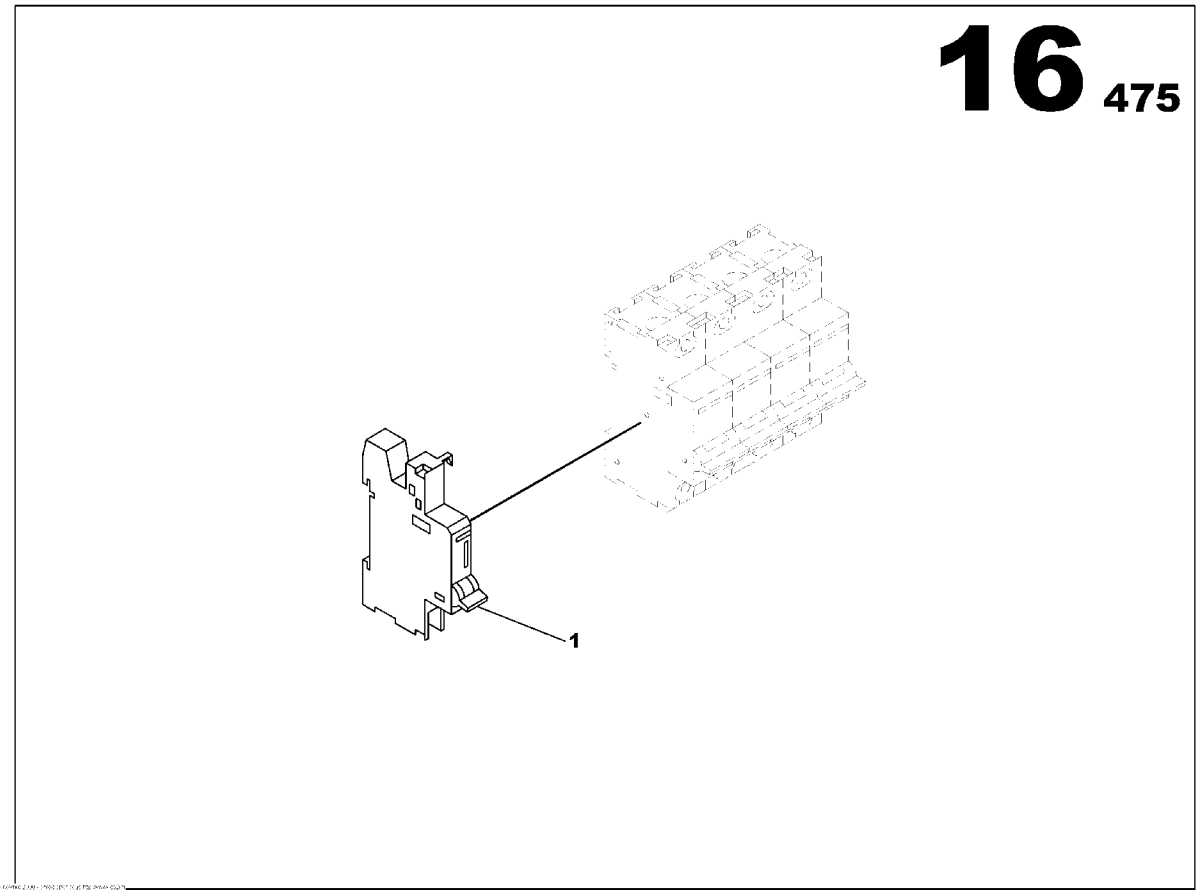

AUXILIARY CONTACT ASSEMBLY
85635845

Part numbers listed are only parts used in this model

Item	Part No.	Description	Qty	Un	From SN	To SN	Order PN	Page
1	85496222	AUXILARY CONTACT	1	UN			85496222	

TELYS 016 WIRING LOOM ASSEMBLY JD 6081

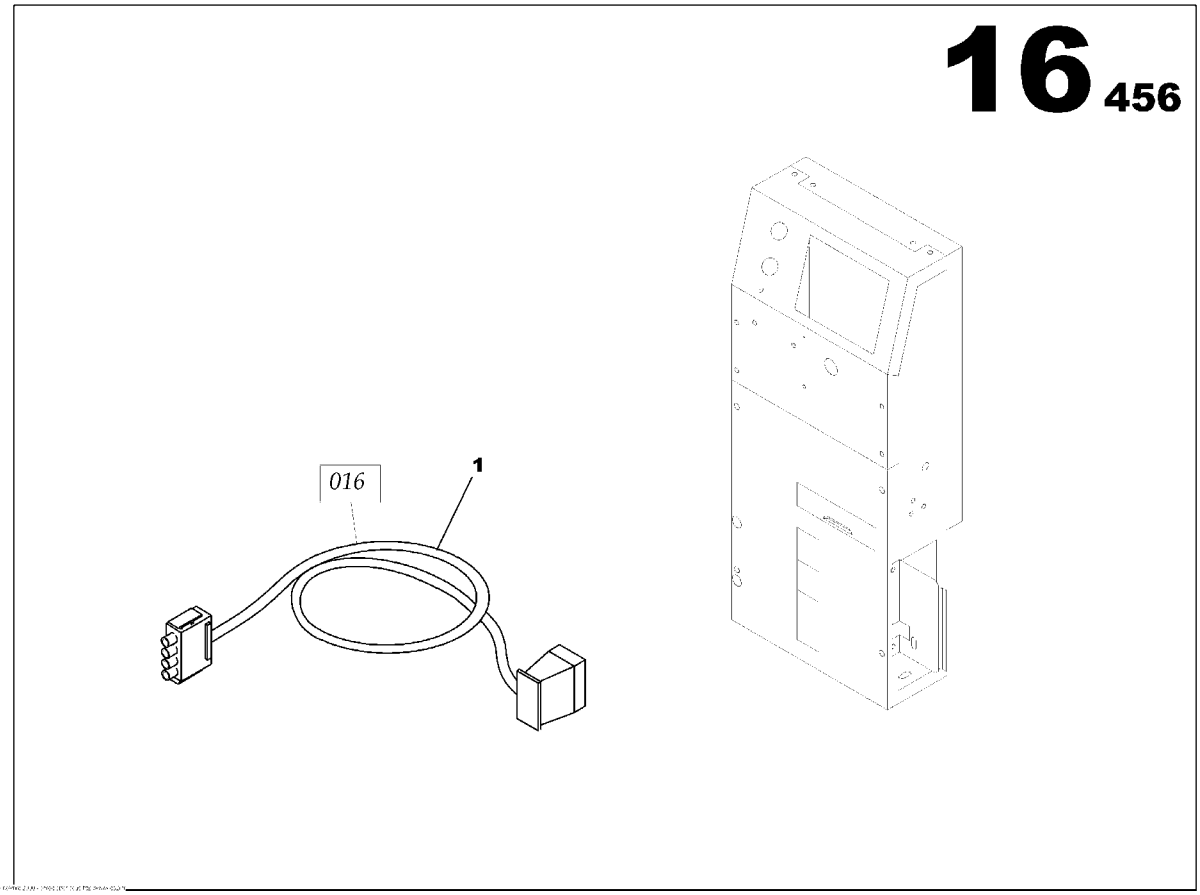

TELYS 016 WIRING LOOM ASSEMBLY JD 6081
85635399

Part numbers listed are only parts used in this model

Item	Part No.	Description	Qty	Un	From SN	To SN	Order PN	Page
1	85635316	INTELLISYSTM WIRING LOOM 016	1	UN	02009106		85635316	

ADJUSTABLE EARTH FAULT PROTECTION WITH INTELISYS

Non illustré
Not illustrated

ADJUSTABLE EARTH FAULT PROTECTION WITH INTELISYS

Part numbers listed are only parts used in this model

Item	Part No.	Description	Qty	Un	From SN	To SN	Order PN	Page
1	17130733	EARTH LEAKAGE RELAY OPTION	1	UN			17130733	
2	85634822	POWER TERMINAL CONNECTIONS 25A ASSEMBLY	1	UN			85634822	239
3	85635738	RELEASE COIL ASSEMBLY	1	UN			85635738	245

POWER TERMINAL CONNECTIONS 25A ASSEMBLY

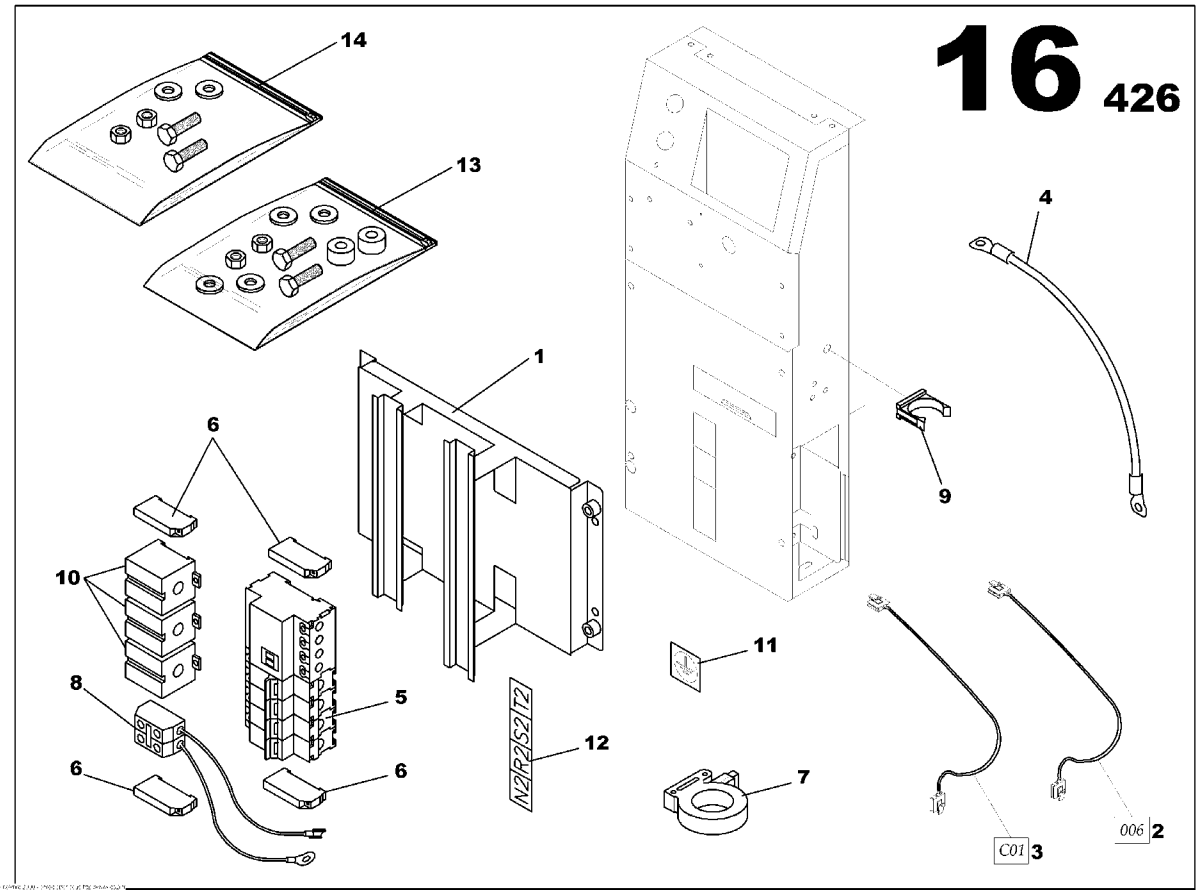

POWER TERMINAL CONNECTIONS 25A ASSEMBLY
85634822

Part numbers listed are only parts used in this model

Item	Part No.	Description	Qty	Un	From SN	To SN	Order PN	Page
1	85635019	CONTROL PANEL S2500 CIRCUIT BREAKER BRACKET	1	UN			85635019	
2	85635373	INTELLISYSTM WIRING LOOM 006	1	UN			85635373	
3	85635456	INTELLISYSTM WIRING LOOM 001	1	UN			85635456	
4	85635589	NEUTRAL/EARTH SYSTEM CABLE 16mm2 L150	1	UN			85635589	
5	85413185	MOULDED CASE CIRCUIT BREAKER 4x25A	1	UN			85413185	
6	85408706	STOP	4	UN			85408706	
7	85635886	TORE	1	UN			85635886	
8	85635944	TERMINAL JUNCTION	1	UN			85635944	
9	85636033	SHAFT BRACKET	1	UN			85636033	
10	85636058	CURRENT TRANSFORMER 40/5	3	UN			85636058	
11	85409084	STICKER EARTH SYMBOL	1	UN			85409084	
12	85409092	STICKER POWER LINK	1	UN			85409092	
13	85636439	SCREWS ASSEMBLY	1	UN			85636439	241
14	85636454	SCREWS ASSEMBLY	1	UN			85636454	243

SCREWS ASSEMBLY

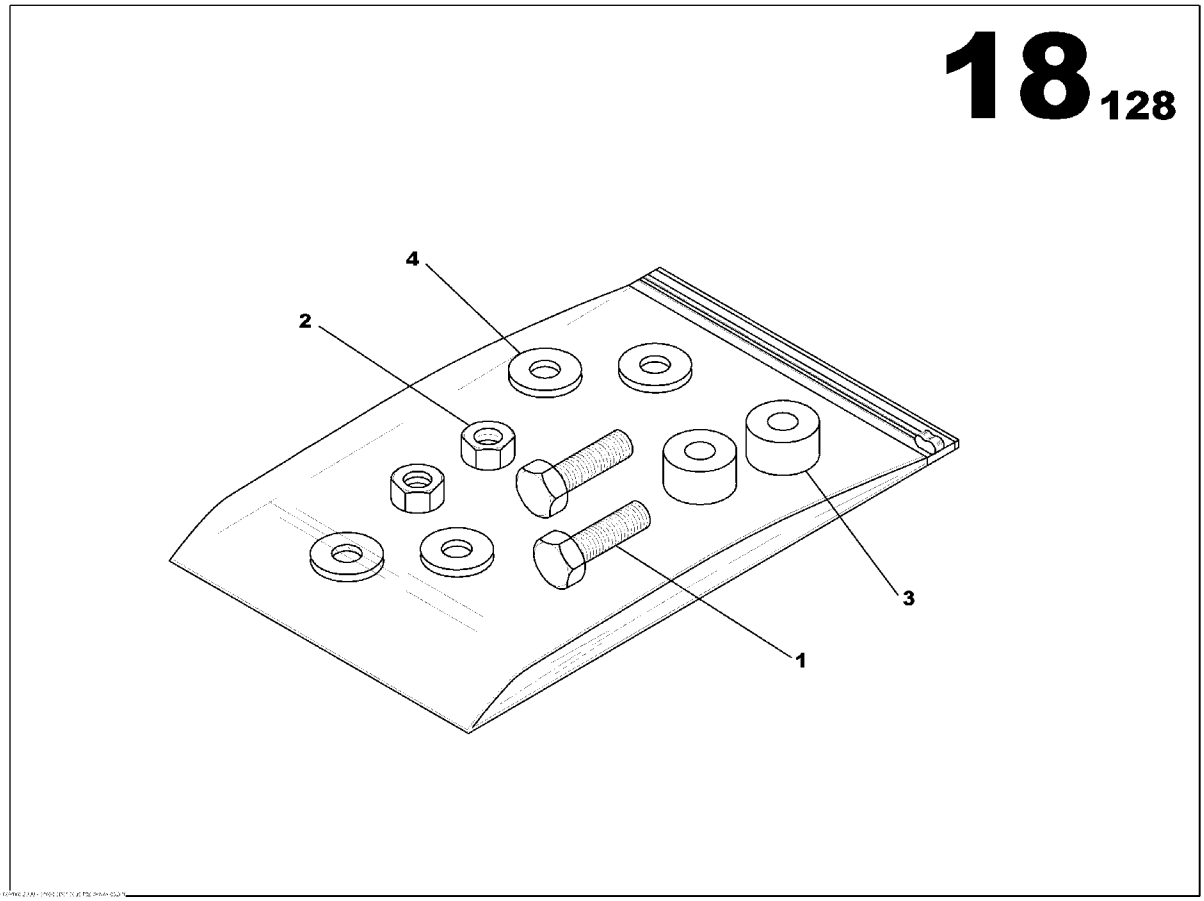

SCREWS ASSEMBLY
85636439

Part numbers listed are only parts used in this model

Item	Part No.	Description	Qty	Un	From SN	To SN	Order PN	Page
1	85636330	SCREW H M6x12	2	UN			85636330	
2	85507911	NUT M6	2	UN			85507911	
3	85636652	SPACER	2	UN			85636652	
4	85636744	WASHER 6x18	4	UN			85636744	

SCREWS ASSEMBLY

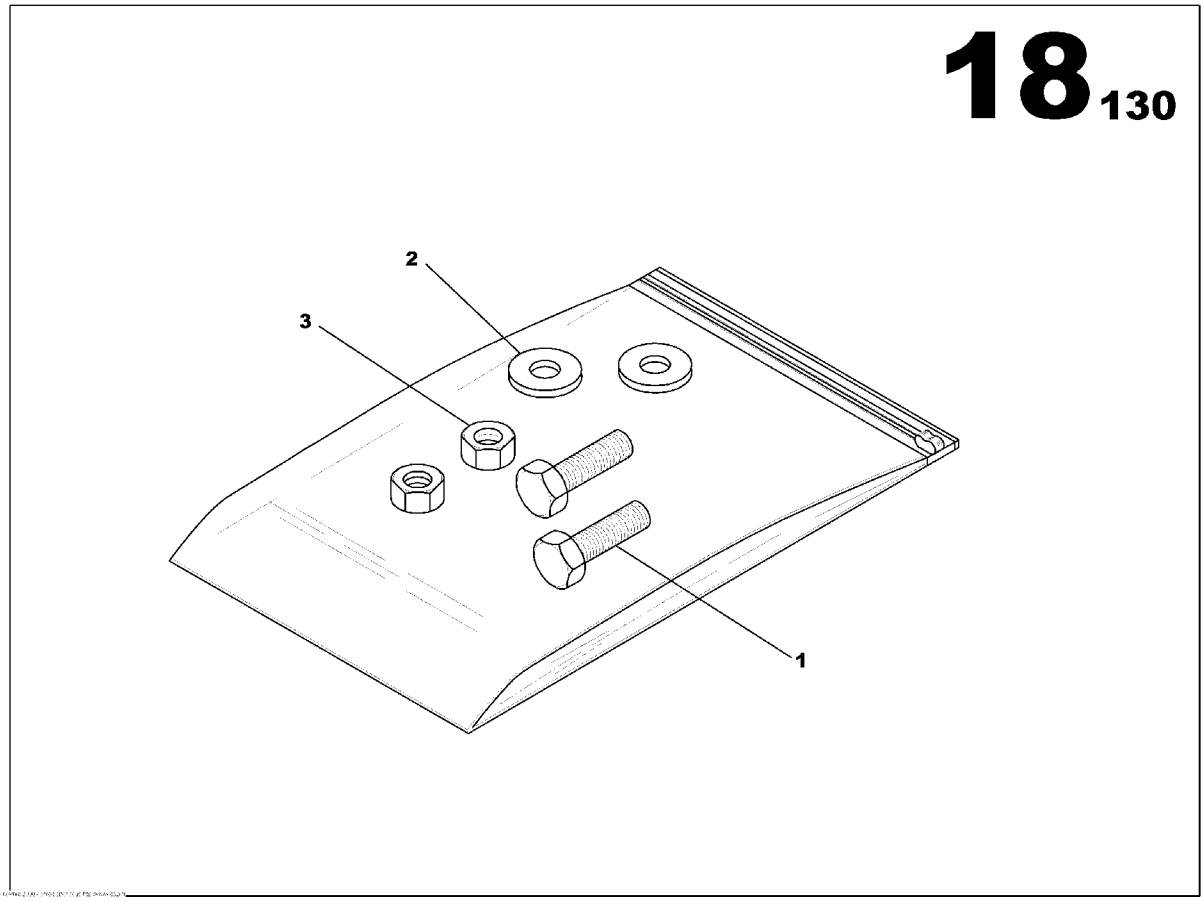

SCREWS ASSEMBLY
85636454

Part numbers listed are only parts used in this model

Item	Part No.	Description	Qty	Un	From SN	To SN	Order PN	Page
1	85636363	SCREW HS M4x16	2	UN			85636363	
2	85636728	WASHER 4x10	2	UN			85636728	
3	85429553	NUT M4	2	UN			85429553	

RELEASE COIL ASSEMBLY

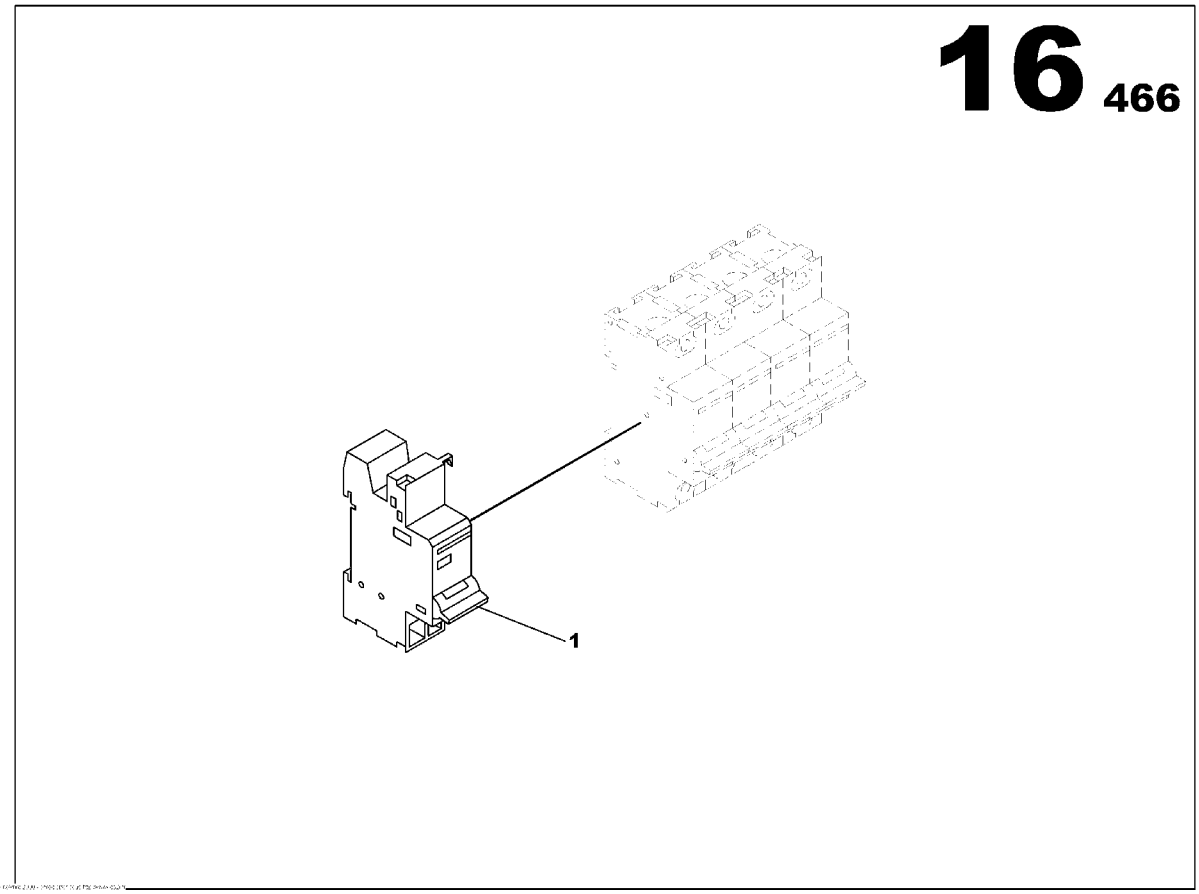

RELEASE COIL ASSEMBLY

85635738

Part numbers listed are only parts used in this model

Item	Part No.	Description	Qty	Un	From SN	To SN	Order PN	Page
1	85408516	CIRCUIT BREAKER SHUNT RELEASE COIL 220/415VAC	1	UN			85408516	

ADJUSTABLE EARTH FAULT PROTECTION WITH INTELISYS

Non illustré
Not illustrated

ADJUSTABLE EARTH FAULT PROTECTION WITH INTELISYS

Part numbers listed are only parts used in this model

Item	Part No.	Description	Qty	Un	From SN	To SN	Order PN	Page
1	85635225	TELYS 010 WIRING LOOM ASSEMBLY JD 6081	1	UN			85635225	249
2	85635357	ELECTRICAL SHAFT	1	ML			85635357	
3	85634616	EMERGENCY STOP PANEL ASSEMBLY	1	UN			85634616	251
4	85639599	DECALS TERMINAL BLOCK ASSEMBLY	1	UN			85639599	255
5	85411569	INTELLISYSTM OPTION CB CARD	1	UN			85411569	257
6	17130691	EARTH LEAKAGE RELAY OPTION	1	UN			17130691	263
7	85636272	S2500 DASHBOARD OPTION	1	UN			85636272	269
8	17130741	INTELLISYSTM PARAMETER OPTION	1	UN			17130741	
9	85635415	TELYS 035 WIRING LOOM ASSEMBLY JD 6081	1	UN			85635415	279
10	85634822	POWER TERMINAL CONNECTIONS 25A ASSEMBLY	1	UN			85634822	281
11	85635738	RELEASE COIL ASSEMBLY	1	UN			85635738	287

TELYS 010 WIRING LOOM ASSEMBLY JD 6081

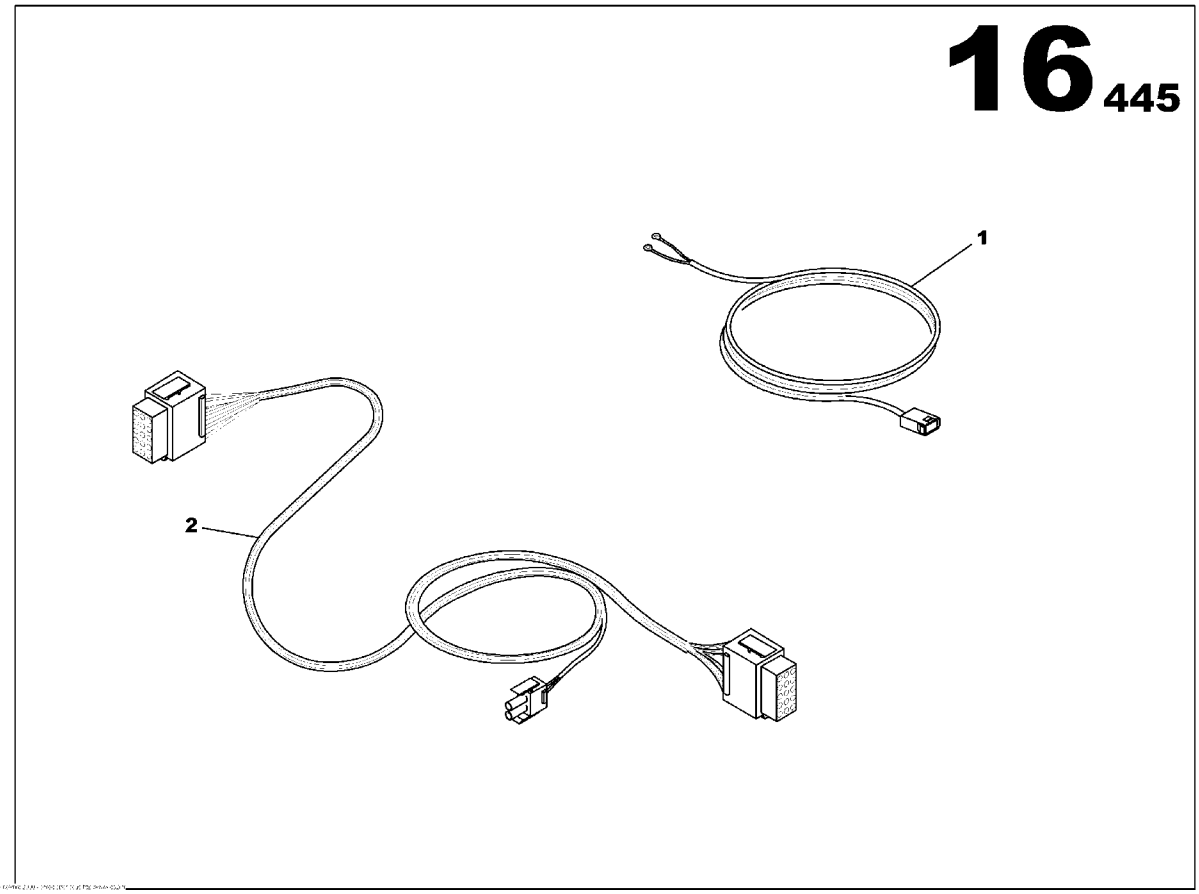

TELYS 010 WIRING LOOM ASSEMBLY JD 6081
85635225

Part numbers listed are only parts used in this model

Item	Part No.	Description	Qty	Un	From SN	To SN	Order PN	Page
1	85635183	INTELLISYSTM WIRING LOOM 010-BAT	1	UN			85635183	
2	85635209	INTELLISYSTM WIRING LOOM 010	1	UN			85635209	

EMERGENCY STOP PANEL ASSEMBLY

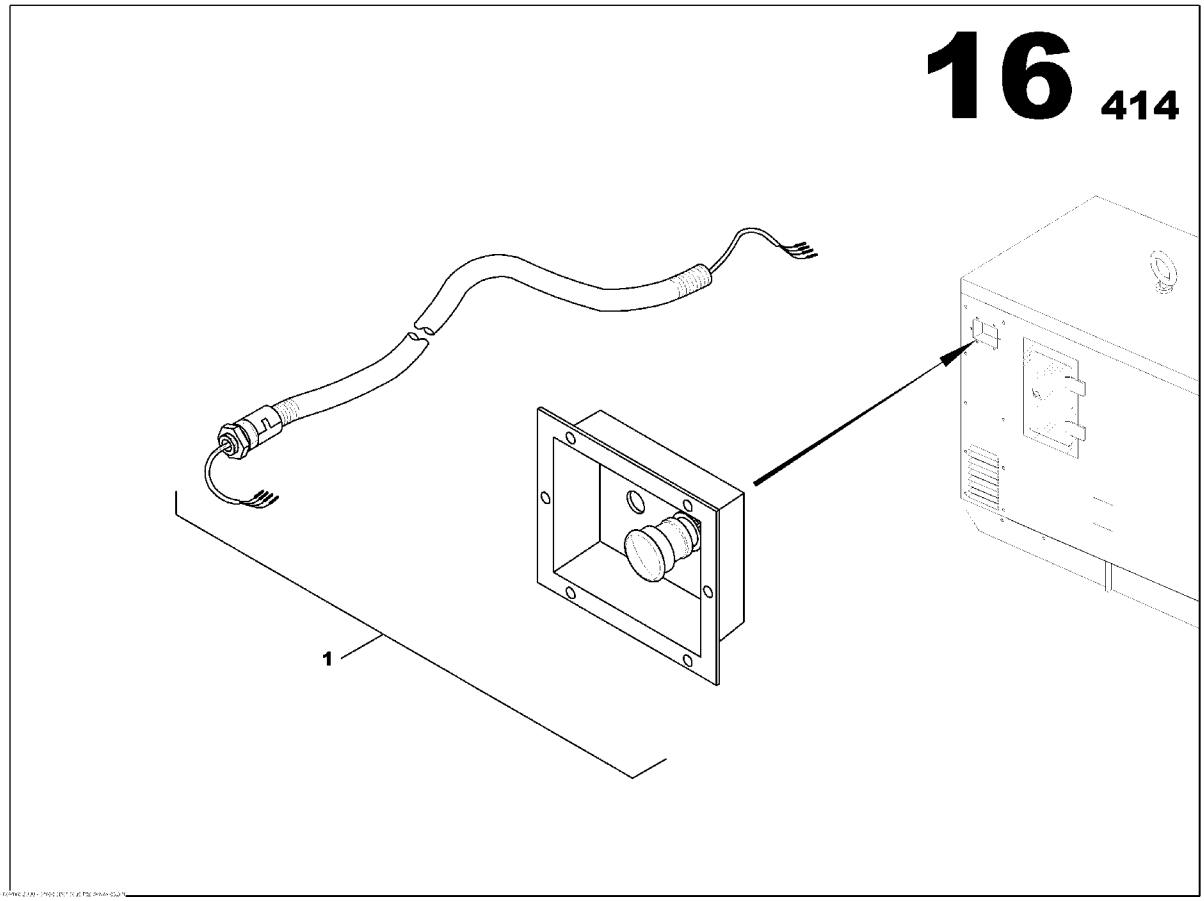

EMERGENCY STOP PANEL ASSEMBLY
85634616

Part numbers listed are only parts used in this model

Item	Part No.	Description	Qty	Un	From SN	To SN	Order PN	Page
1	85634624	EMERGENCY STOP PANEL ASSEMBLY	1	UN			85634624	253

EMERGENCY STOP PANEL ASSEMBLY

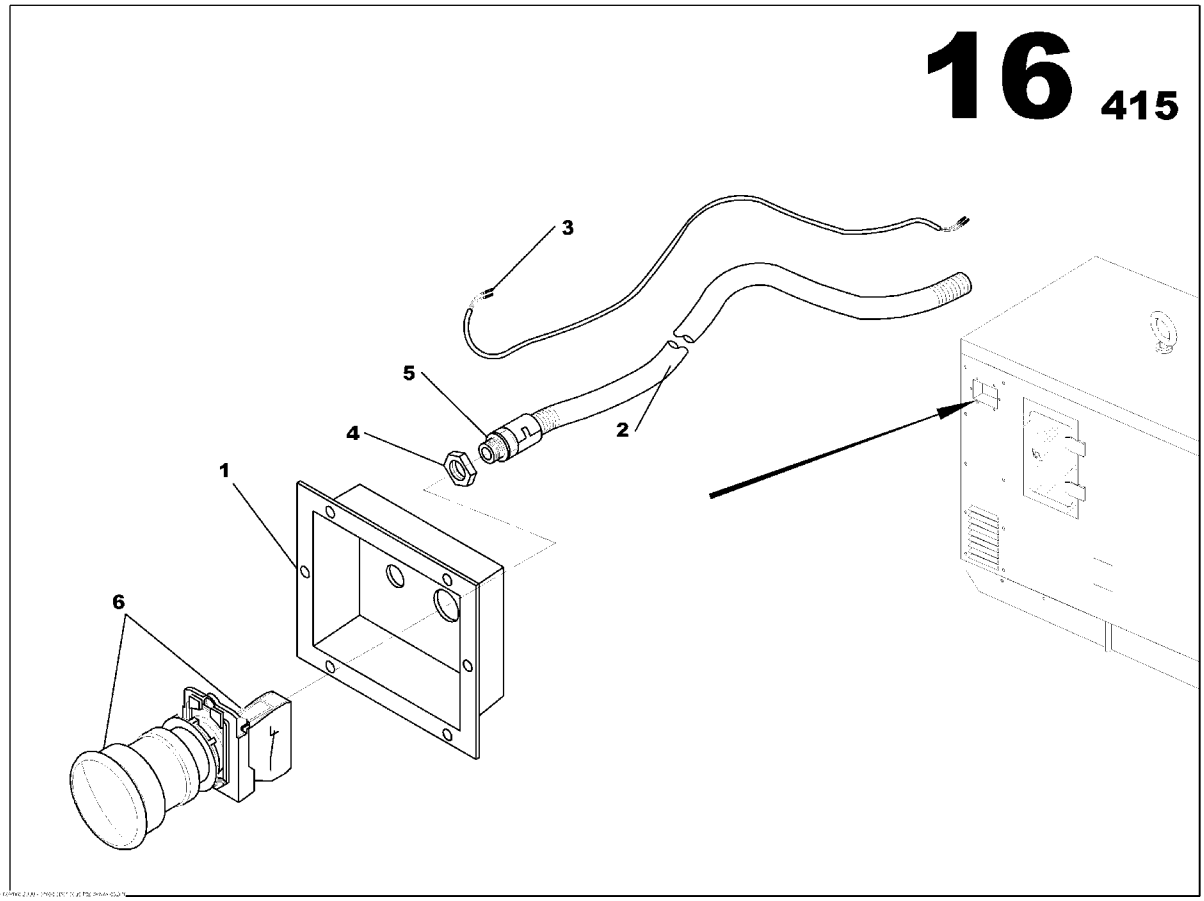

EMERGENCY STOP PANEL ASSEMBLY
85634624

Part numbers listed are only parts used in this model

Item	Part No.	Description	Qty	Un	From SN	To SN	Order PN	Page
1	85407294	EMERGENCY STOP PANEL	1	UN			85407294	
2	85635241	ELECTRICAL SHAFT D09	1.2	ML			85635241	
3	85635621	EMERGENCY STOP WIRING LOOM	1	UN			85635621	
4	85506061	GLAND NUT SCREW PG9	1	UN			85506061	
5	85499663	PIPE UNION PG9	1	UN			85499663	
6	85631422	EMERGENCY STOP BUTTON	1	UN			85631422	

DECALS TERMINAL BLOCK ASSEMBLY

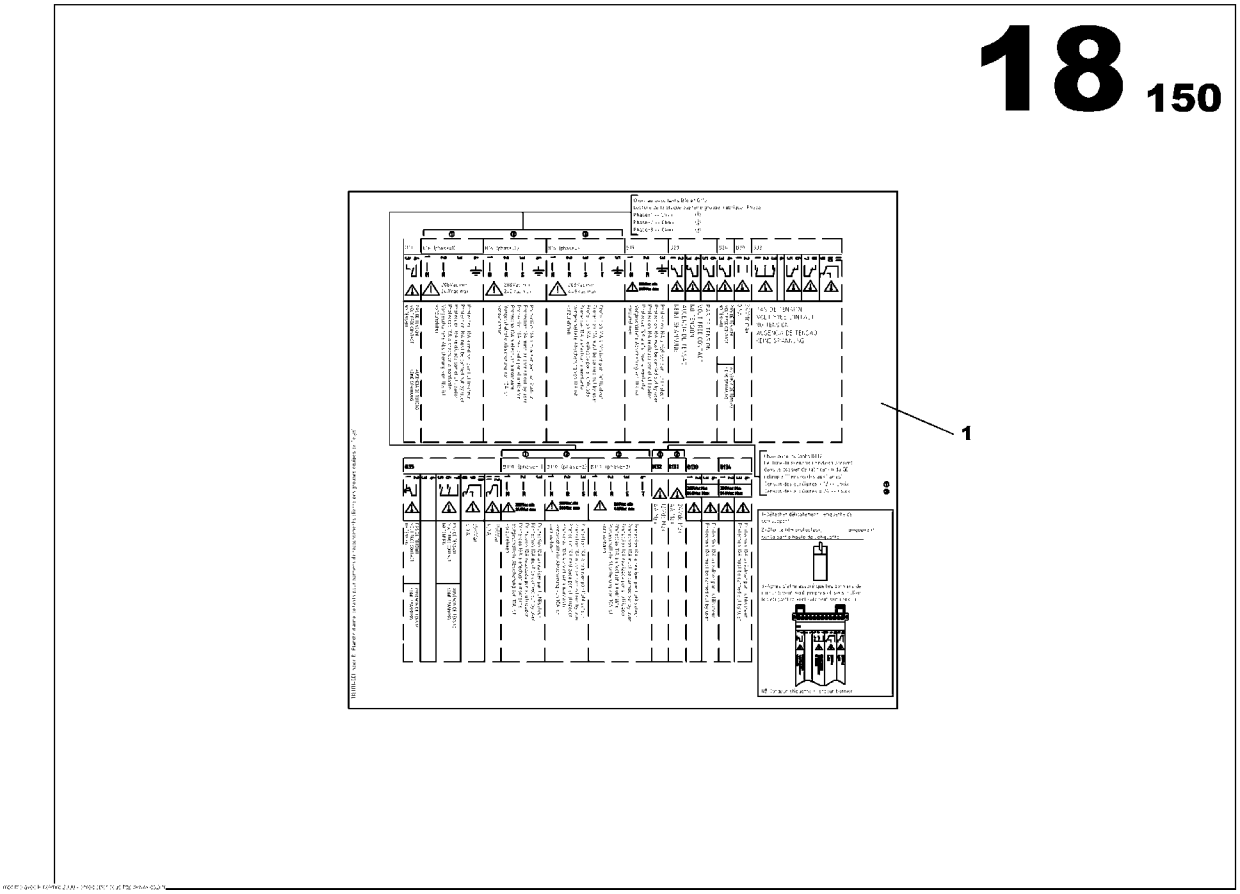

DECALS TERMINAL BLOCK ASSEMBLY
85639599

Part numbers listed are only parts used in this model

Item	Part No.	Description	Qty	Un	From SN	To SN	Order PN	Page
1	85639573	STICKER TERMINAL BLOCK	1	UN	03012825		85639573	

INTELLISYSTM OPTION CB CARD

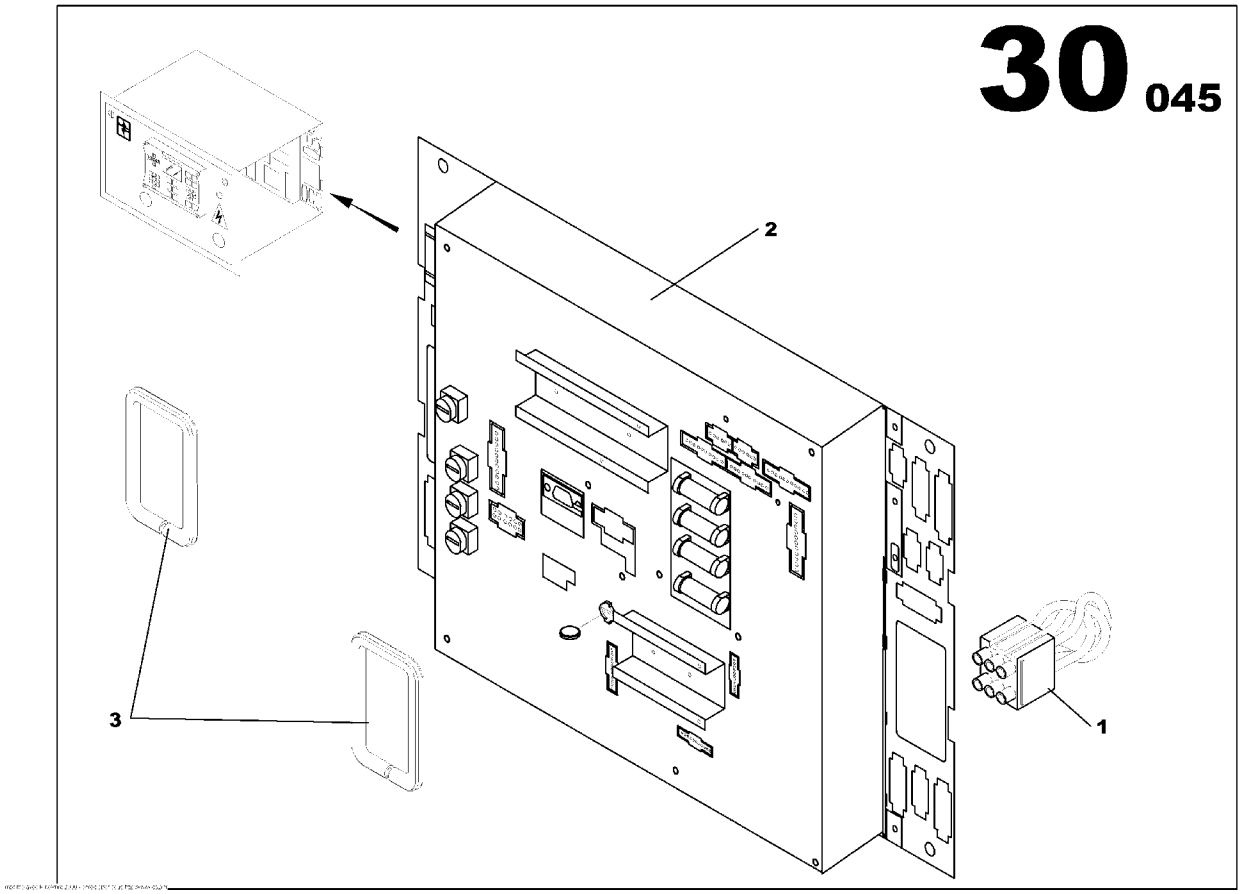

INTELLISYSTM OPTION CB CARD
85411569

Part numbers listed are only parts used in this model

Item	Part No.	Description	Qty	Un	From SN	To SN	Order PN	Page
1	85504033	WIRING LOOM C35S	1	UN			85504033	
2	85636991	INTELLISYSTM CARD CB12 *-1.10G*	1	UN	04000934		85636991	261
3	85630515	LINEAR SEAL	0.2	ML			85630515	

INTELLISYSTM OPTION CB CARD

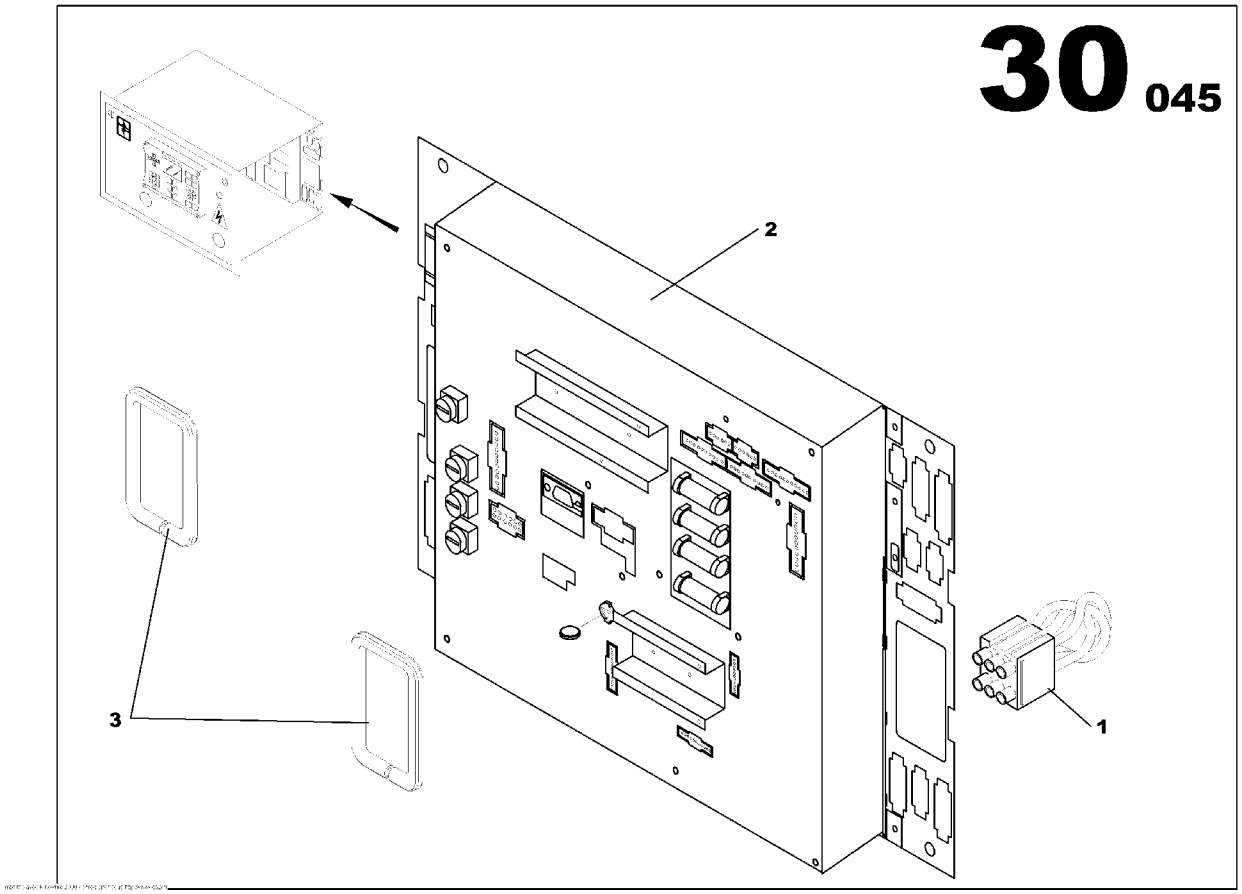

INTELLISYSTM OPTION CB CARD
85411569

Part numbers listed are only parts used in this model

Item	Part No.	Description	Qty	Un	From SN	To SN	Order PN	Page
1	85504033	WIRING LOOM C35S	1	UN			85504033	
2	85636991	INTELLISYSTM CARD CB12 *-1.10G*	1	UN	04000934		85636991	261
3	85630515	LINEAR SEAL	0.2	ML			85630515	

INTELLISYSTM CARD CB12

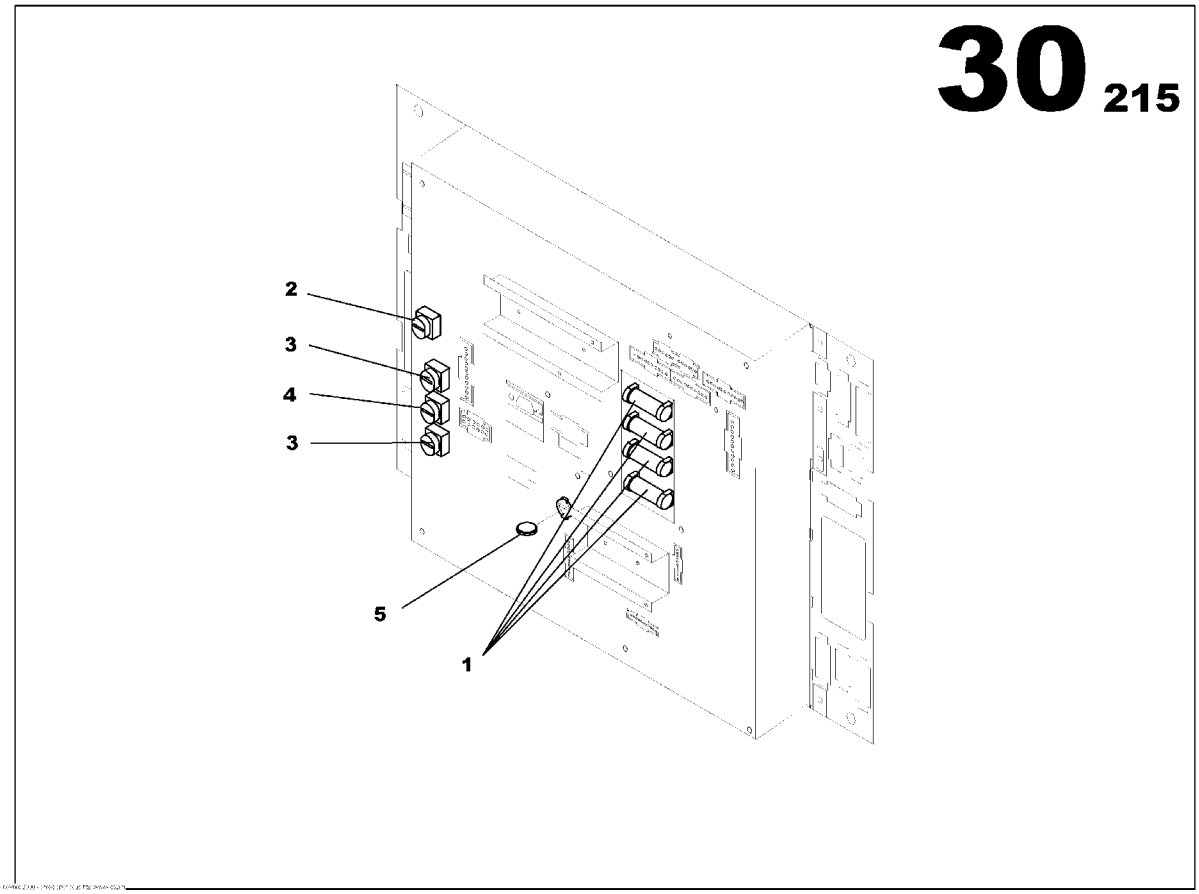

INTELLISYSTM CARD CB12
85636991

Part numbers listed are only parts used in this model

Item	Part No.	Description	Qty	Un	From SN	To SN	Order PN	Page
1	85426112	FUSE CYLINDRICAL 12.5A	4	UN			85426112	
2	85426120	FUSE CYLINDRICAL 10A	1	UN			85426120	
3	85426138	FUSE CYLINDRICAL 1A	2	UN			85426138	
4	85426146	FUSE CYLINDRICAL 2,5A	1	UN			85426146	
5	85505154	CR2032 CELL	1	UN			85505154	

EARTH LEAKAGE RELAY OPTION

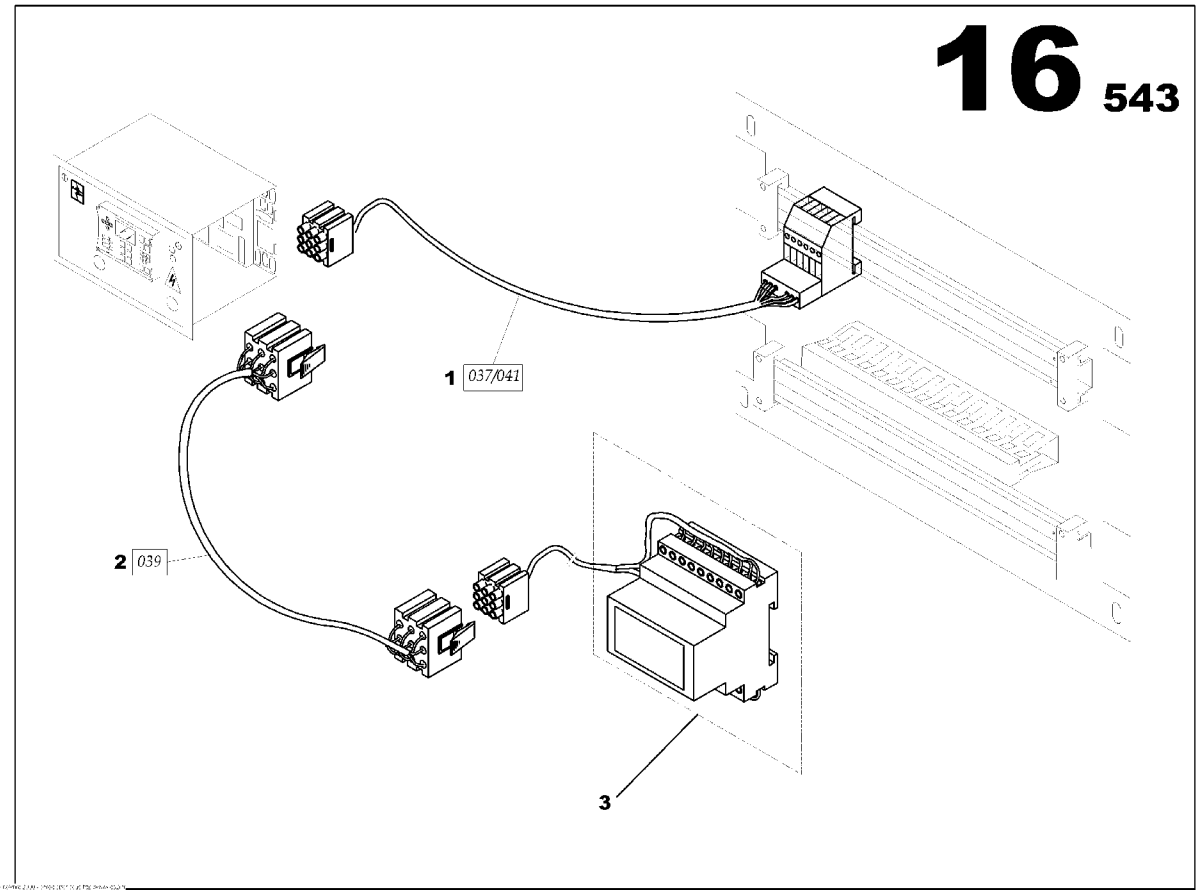

EARTH LEAKAGE RELAY OPTION
17130691

Part numbers listed are only parts used in this model

Item	Part No.	Description	Qty	Un	From SN	To SN	Order PN	Page
1	85636892	INTELLISYSTM WIRING LOOM 037/041	1	UN			85636892	
2	85636942	INTELLISYSTM WIRING LOOM 030	1	UN			85636942	
3	85504272	EARTH LEAKAGE 12V	1	UN			85504272	267

EARTH LEAKAGE RELAY OPTION

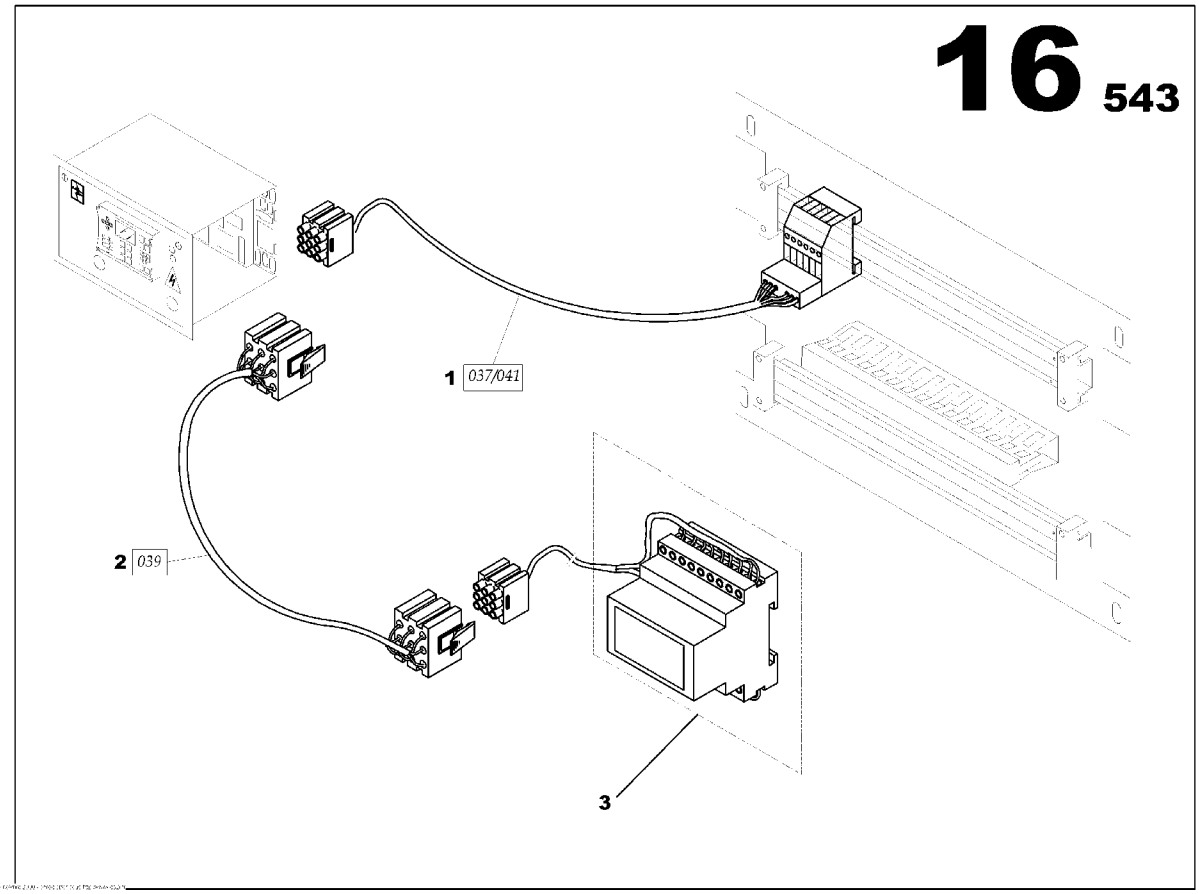

EARTH LEAKAGE RELAY OPTION
17130691

Part numbers listed are only parts used in this model

Item	Part No.	Description	Qty	Un	From SN	To SN	Order PN	Page
1	85636892	INTELLISYSTM WIRING LOOM 037/041	1	UN			85636892	
2	85636942	INTELLISYSTM WIRING LOOM 030	1	UN			85636942	
3	85504272	EARTH LEAKAGE 12V	1	UN			85504272	267

EARTH LEAKAGE 12V

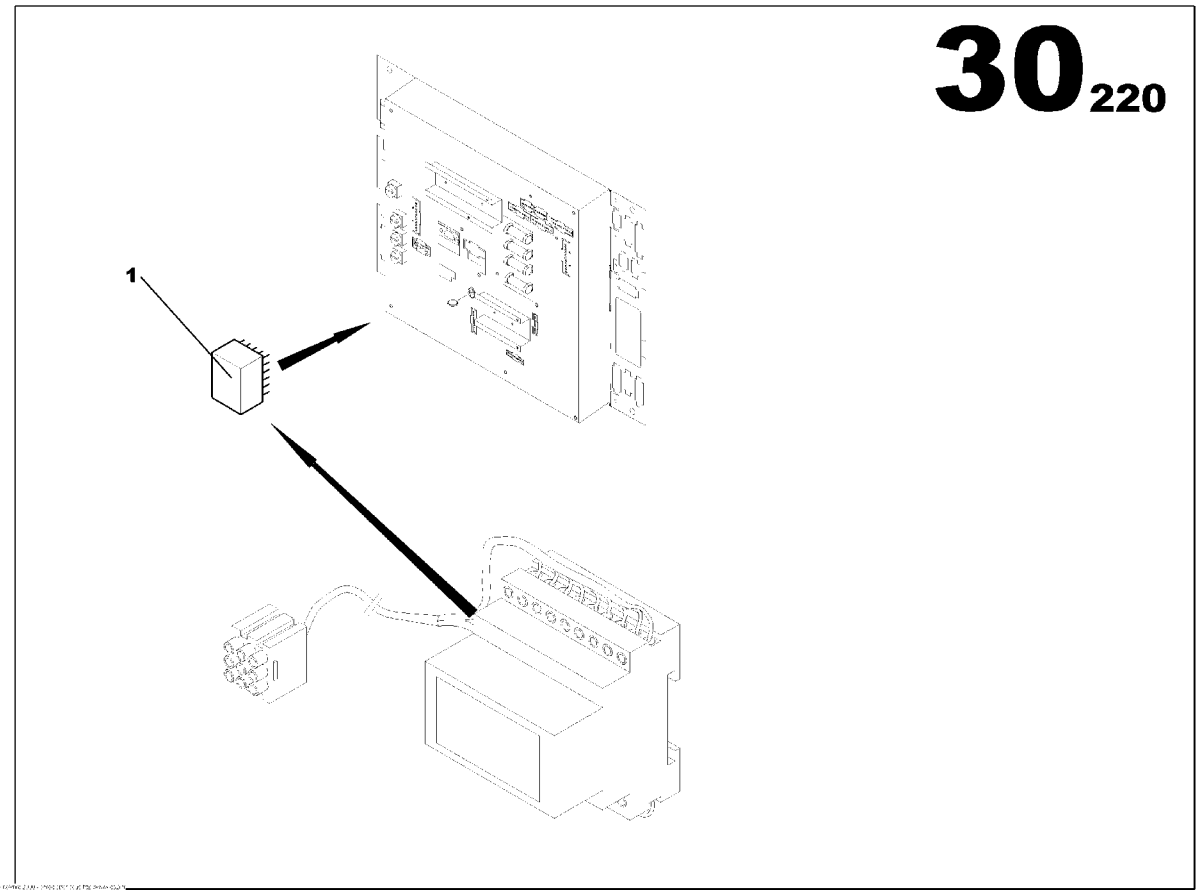

EARTH LEAKAGE 12V
85504272

Part numbers listed are only parts used in this model

Item	Part No.	Description	Qty	Un	From SN	To SN	Order PN	Page
1	85508570	RELAY CI 12V (RT2)	1	UN			85508570	

S2500 DASHBOARD OPTION

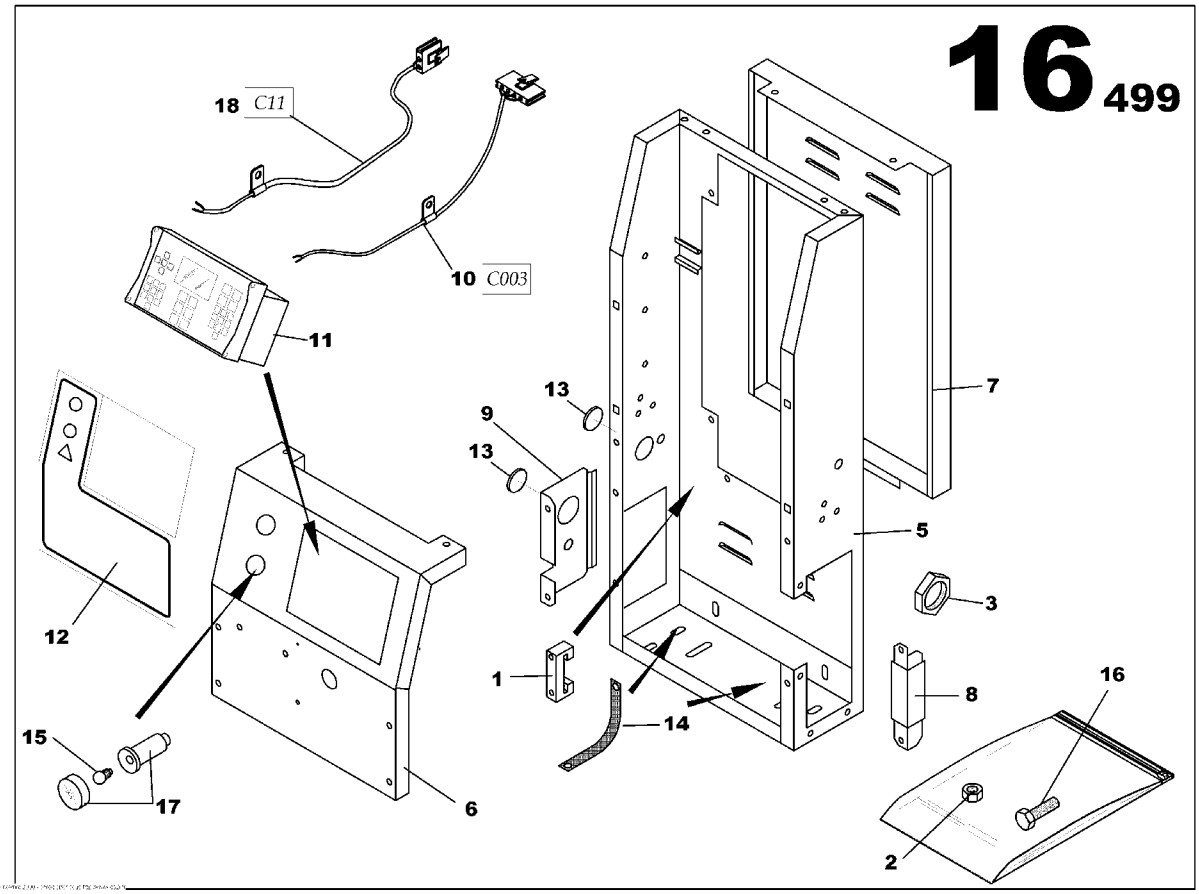

S2500 DASHBOARD OPTION
85636272

Part numbers listed are only parts used in this model

Item	Part No.	Description	Qty	Un	From SN	To SN	Order PN	Page
1	85634715	CONTROL PANEL SHEET METAL ASSEMBLY	1	UN			85634715	273
1	85408854	STOP	3	UN			85408854	
2	85408656	NUT M5	1	UN			85408656	
2	85636298	CONTROL PANEL ASSEMBLY	1	UN			85636298	275
3	85413276	GLAND NUT SCREW PG11	1	UN			85413276	
3	85636595	PLASTIC PLATE S2500 ASSEMBLY	1	UN			85636595	277
5	85636835	CONTROL PANEL S2500 HOUSING	1	UN			85636835	
6	85636843	CONTROL PANEL S2500 HOUSING	1	UN			85636843	
7	85636850	REAR CLOSURE CONTROL PANEL	1	UN			85636850	
8	85636868	SUPPORT PANEL	1	UN			85636868	
9	85635027	CABLE OUTLET PLATE	1	UN			85635027	
10	85504017	INTELLISYSTM WIRING LOOM 003	1	UN			85504017	
11	85623668	INTELLISYSTM DISPLAY *-IR PLATE SOFT 1.2*	1	UN			85627495	
12	85636587	PLASTIC PLATE L235xh245	1	UN			85636587	
13	85408391	RUBBER GROMMET D47	2	UN			85408391	
14	85505543	GROUND WIRES 16mm2	2	UN			85505543	
15	85402519	LAMP 12V BA9S TYPE	1	UN			85402519	
16	85636389	SCREW H M6x16	10	UN			85636389	
17	85503522	PANEL LIGHT CYLINDRIC D22	1	UN			85503522	
18	85504025	WIRING LOOM C11 L460	1	UN			85504025	

S2500 DASHBOARD OPTION

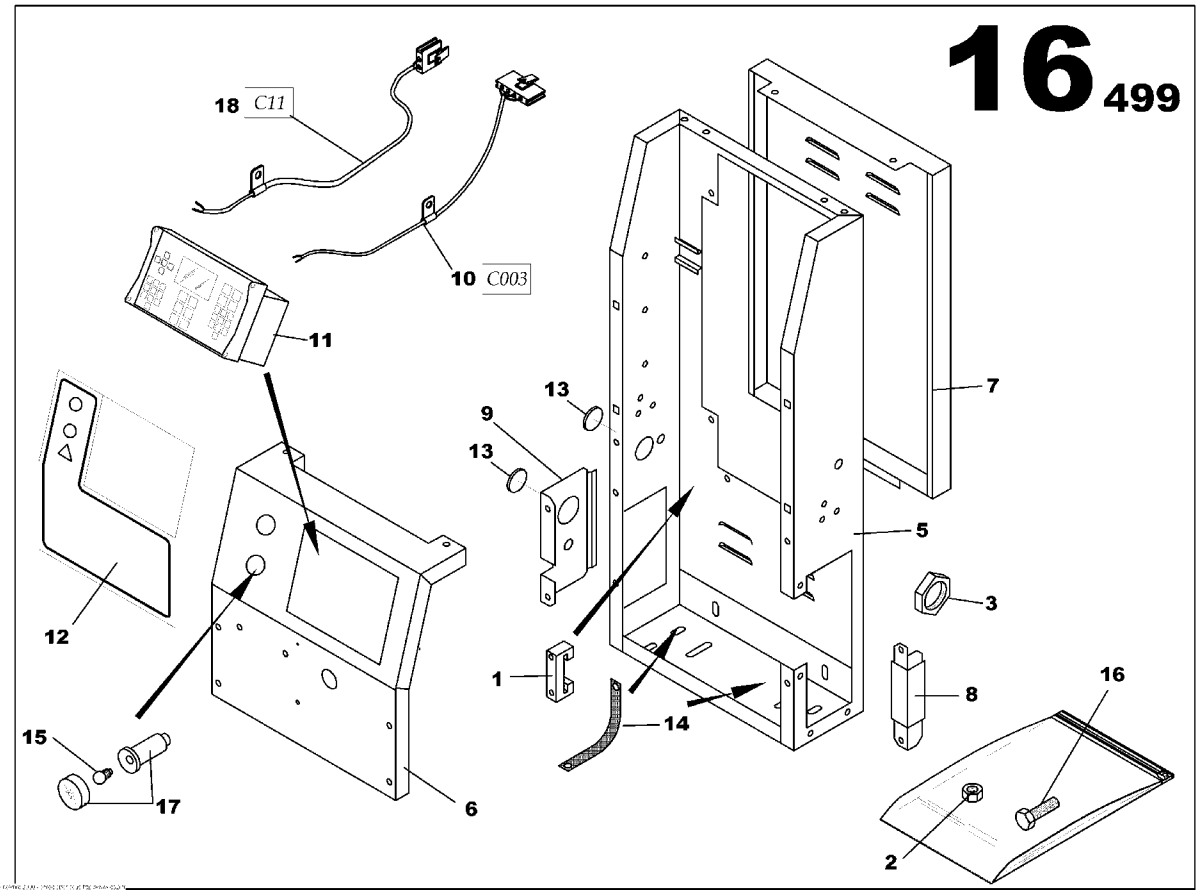

S2500 DASHBOARD OPTION
85636272

Part numbers listed are only parts used in this model

Item	Part No.	Description	Qty	Un	From SN	To SN	Order PN	Page
1	85634715	CONTROL PANEL SHEET METAL ASSEMBLY	1	UN			85634715	273
1	85408854	STOP	3	UN			85408854	
2	85408656	NUT M5	1	UN			85408656	
2	85636298	CONTROL PANEL ASSEMBLY	1	UN			85636298	275
3	85413276	GLAND NUT SCREW PG11	1	UN			85413276	
3	85636595	PLASTIC PLATE S2500 ASSEMBLY	1	UN			85636595	277
5	85636835	CONTROL PANEL S2500 HOUSING	1	UN			85636835	
6	85636843	CONTROL PANEL S2500 HOUSING	1	UN			85636843	
7	85636850	REAR CLOSURE CONTROL PANEL	1	UN			85636850	
8	85636868	SUPPORT PANEL	1	UN			85636868	
9	85635027	CABLE OUTLET PLATE	1	UN			85635027	
10	85504017	INTELLISYSTM WIRING LOOM 003	1	UN			85504017	
11	85623668	INTELLISYSTM DISPLAY *-IR PLATE SOFT 1.2*	1	UN			85627495	
12	85636587	PLASTIC PLATE L235xh245	1	UN			85636587	
13	85408391	RUBBER GROMMET D47	2	UN			85408391	
14	85505543	GROUND WIRES 16mm2	2	UN			85505543	
15	85402519	LAMP 12V BA9S TYPE	1	UN			85402519	
16	85636389	SCREW H M6x16	10	UN			85636389	
17	85503522	PANEL LIGHT CYLINDRIC D22	1	UN			85503522	
18	85504025	WIRING LOOM C11 L460	1	UN			85504025	

CONTROL PANEL SHEET METAL ASSEMBLY

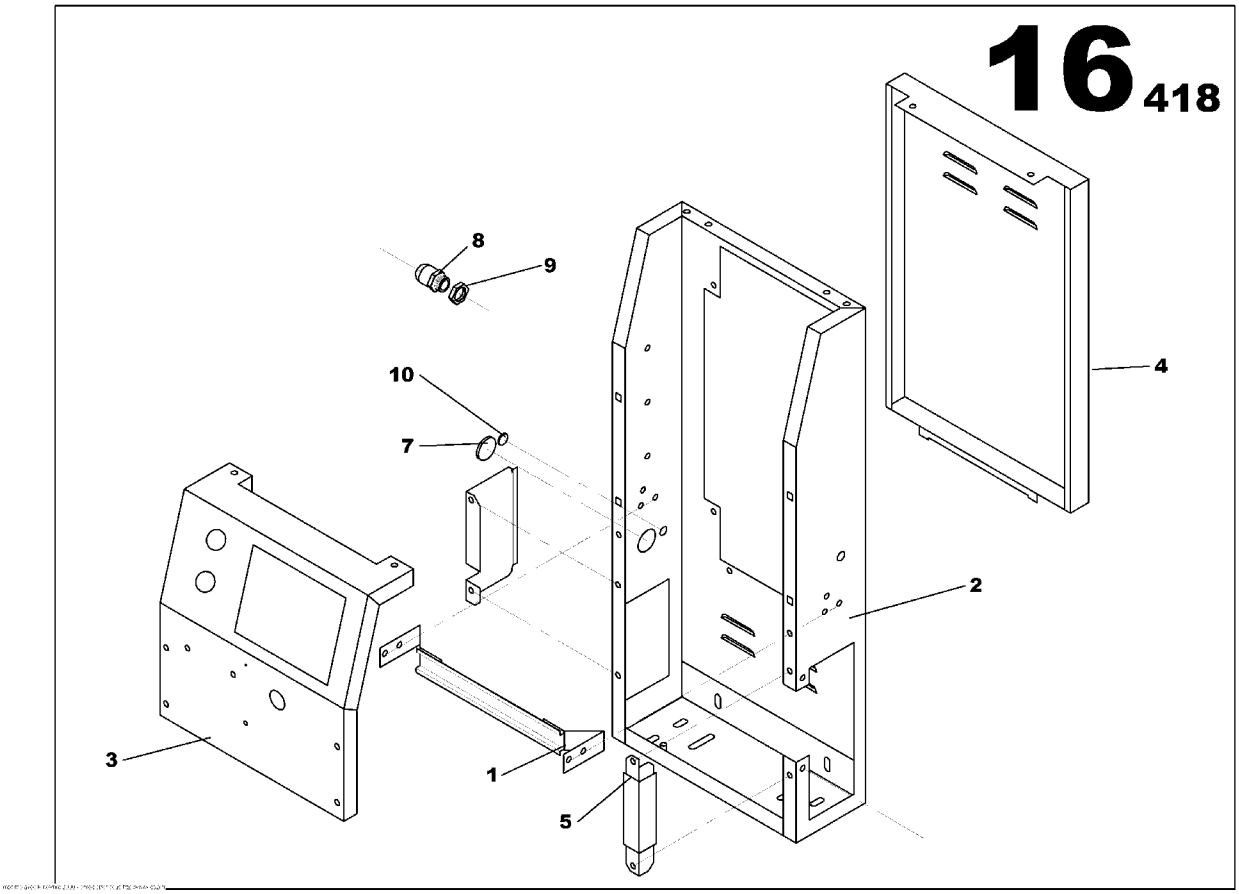

CONTROL PANEL SHEET METAL ASSEMBLY
85634715

Part numbers listed are only parts used in this model

Item	Part No.	Description	Qty	Un	From SN	To SN	Order PN	Page
1	85634632	ELECTRIC DIN RAIL	1	UN			85634632	
2	85634665	CONTROL PANEL S2500 HOUSING	1	UN			85634665	
3	85634673	CONTROL PANEL BRACKET	1	UN			85634673	
4	85634681	REAR CLOSURE PANEL S2500 CONTROL PANEL	1	UN			85634681	
5	85634699	SUPPORT PANEL S2500 CONTROL PANEL	1	UN			85634699	
6	85635027	CABLE OUTLET PLATE	1	UN			85635027	
7	85408391	RUBBER GROMMET D47	2	UN			85408391	
8	85635894	GLAND NUT PG13	1	UN			85635894	
9	85635902	PG13 NUT	1	UN			85635902	
10	85636694	RUBBER GROMMET D15	1	UN			85636694	

CONTROL PANEL ASSEMBLY

CONTROL PANEL ASSEMBLY
85636298

Part numbers listed are only parts used in this model

Item	Part No.	Description	Qty	Un	From SN	To SN	Order PN	Page

PLASTIC PLATE S2500 ASSEMBLY

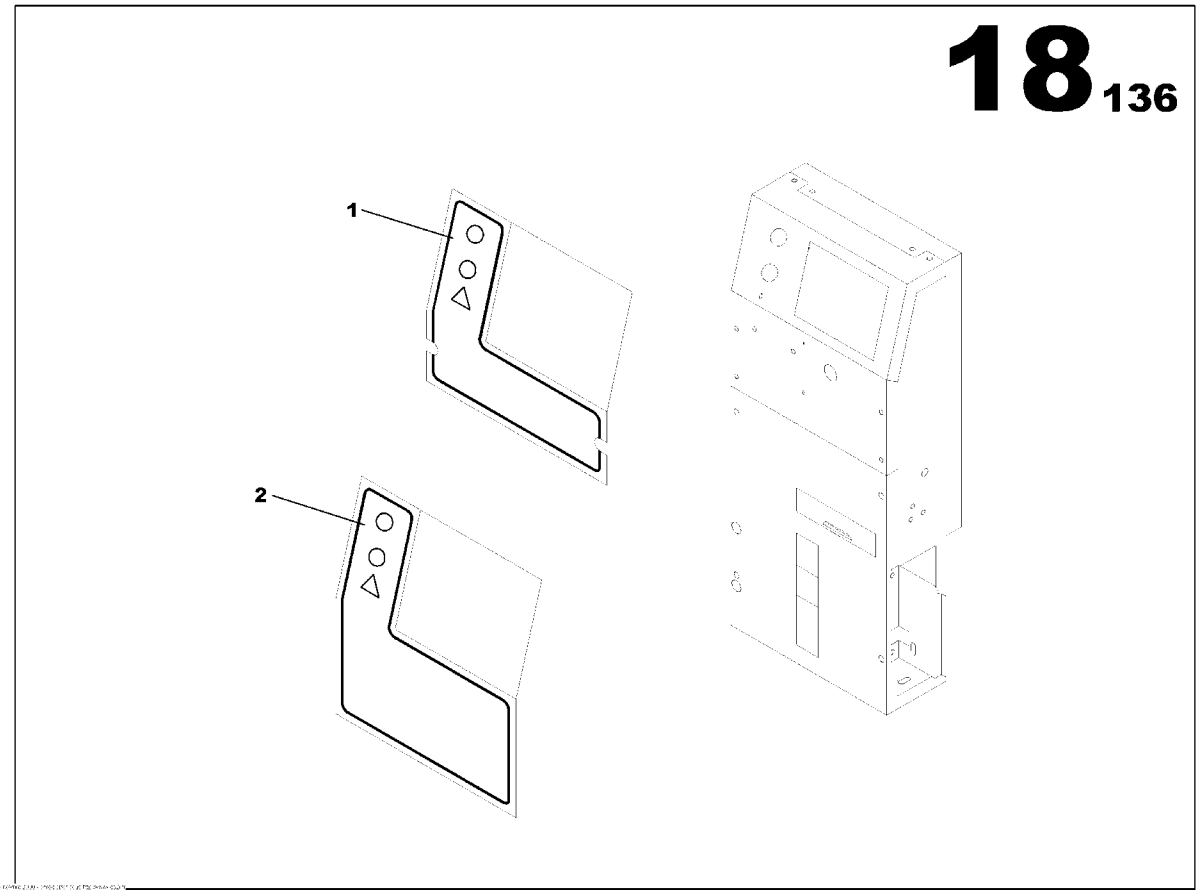

PLASTIC PLATE S2500 ASSEMBLY
85636595

Part numbers listed are only parts used in this model

Item	Part No.	Description	Qty	Un	From SN	To SN	Order PN	Page
1	85636587	PLASTIC PLATE L235xh245	1	UN			85636587	
2	85636611	PLASTIC PLATE L235xh325	1	UN			85636611	

TELYS 035 WIRING LOOM ASSEMBLY JD 6081

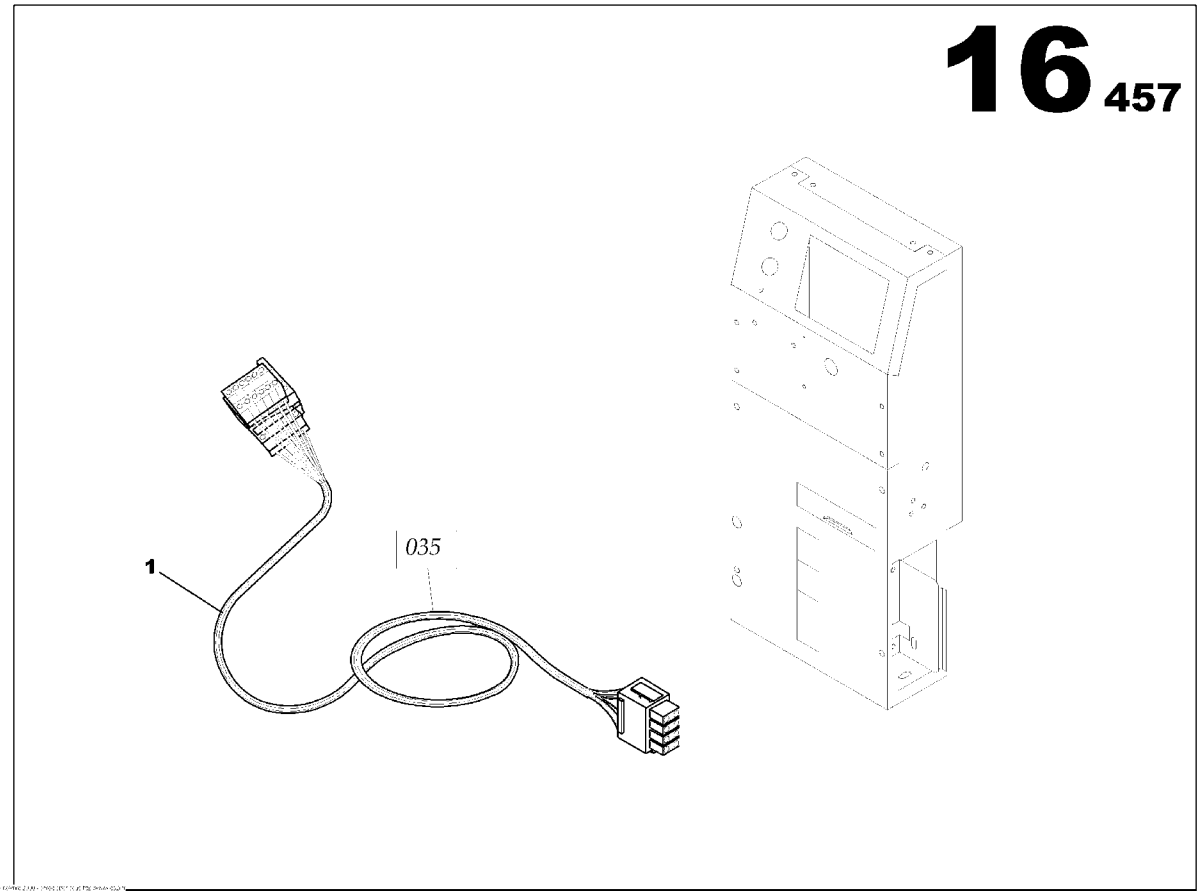

TELYS 035 WIRING LOOM ASSEMBLY JD 6081
85635415

Part numbers listed are only parts used in this model

Item	Part No.	Description	Qty	Un	From SN	To SN	Order PN	Page
1	85635308	INTELLISYSTM WIRING LOOM 035	1	UN	02010280		85635308	

POWER TERMINAL CONNECTIONS 25A ASSEMBLY

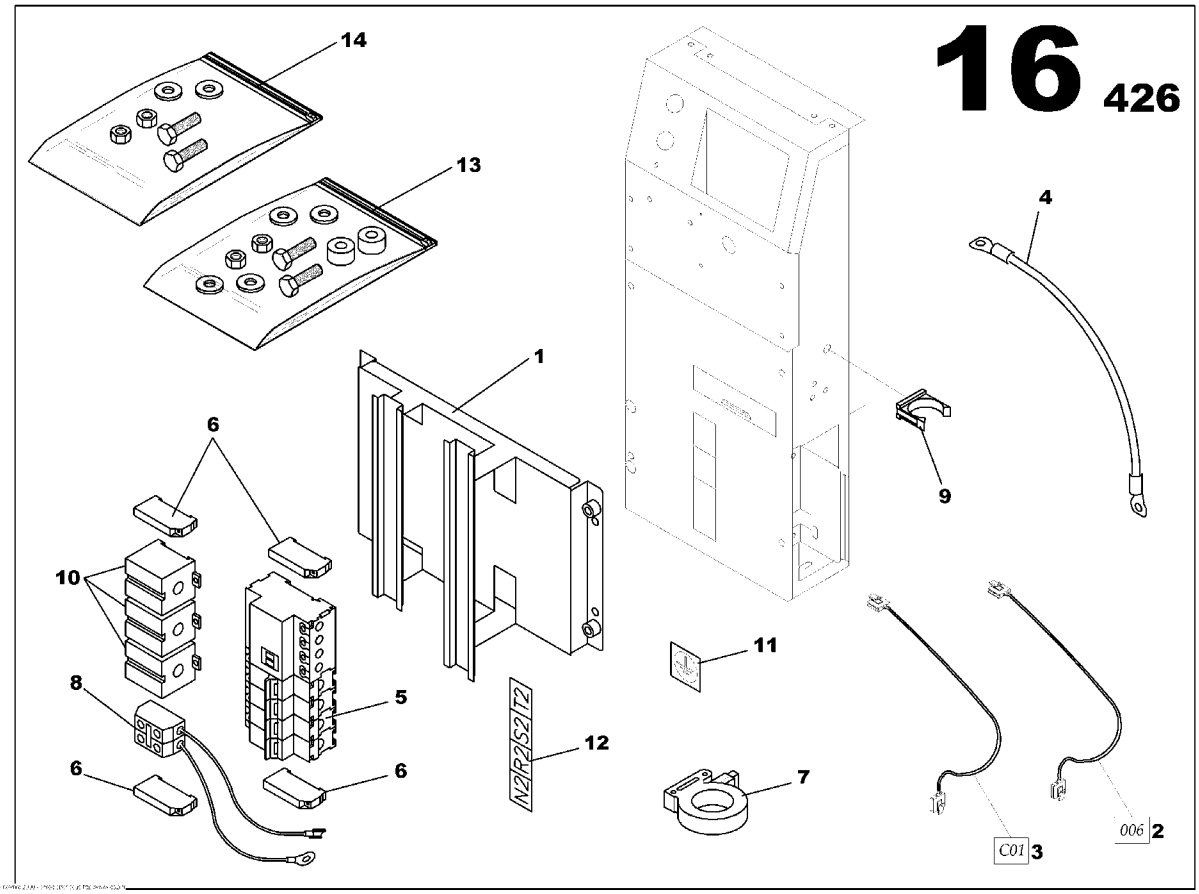

POWER TERMINAL CONNECTIONS 25A ASSEMBLY
85634822

Part numbers listed are only parts used in this model

Item	Part No.	Description	Qty	Un	From SN	To SN	Order PN	Page
1	85635019	CONTROL PANEL S2500 CIRCUIT BREAKER BRACKET	1	UN			85635019	
2	85635373	INTELLISYSTM WIRING LOOM 006	1	UN			85635373	
3	85635456	INTELLISYSTM WIRING LOOM 001	1	UN			85635456	
4	85635589	NEUTRAL/EARTH SYSTEM CABLE 16mm2 L150	1	UN			85635589	
5	85413185	MOULDED CASE CIRCUIT BREAKER 4x25A	1	UN			85413185	
6	85408706	STOP	4	UN			85408706	
7	85635886	TORE	1	UN			85635886	
8	85635944	TERMINAL JUNCTION	1	UN			85635944	
9	85636033	SHAFT BRACKET	1	UN			85636033	
10	85636058	CURRENT TRANSFORMER 40/5	3	UN			85636058	
11	85409084	STICKER EARTH SYMBOL	1	UN			85409084	
12	85409092	STICKER POWER LINK	1	UN			85409092	
13	85636439	SCREWS ASSEMBLY	1	UN			85636439	283
14	85636454	SCREWS ASSEMBLY	1	UN			85636454	285

SCREWS ASSEMBLY

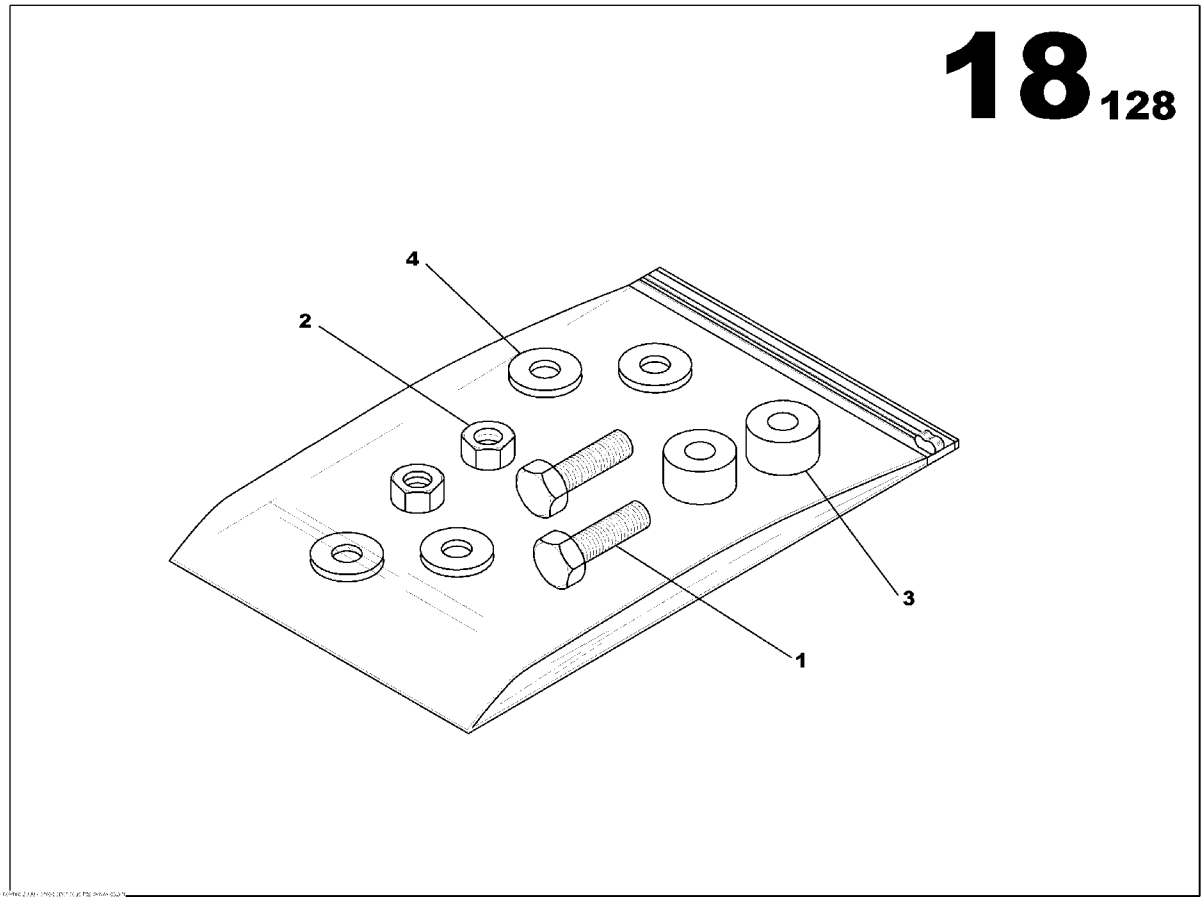

SCREWS ASSEMBLY
85636439

Part numbers listed are only parts used in this model

Item	Part No.	Description	Qty	Un	From SN	To SN	Order PN	Page
1	85636330	SCREW H M6x12	2	UN			85636330	
2	85507911	NUT M6	2	UN			85507911	
3	85636652	SPACER	2	UN			85636652	
4	85636744	WASHER 6x18	4	UN			85636744	

SCREWS ASSEMBLY

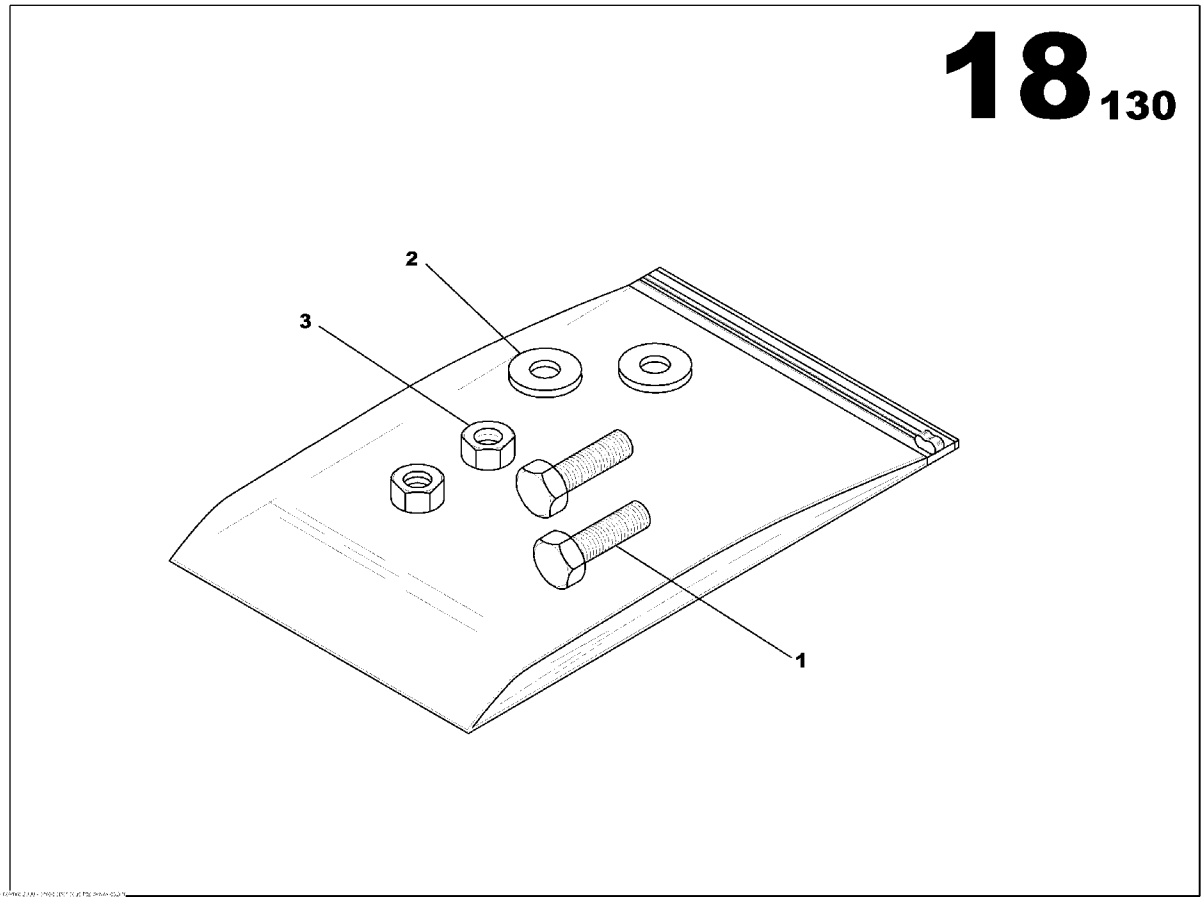

SCREWS ASSEMBLY
85636454

Part numbers listed are only parts used in this model

Item	Part No.	Description	Qty	Un	From SN	To SN	Order PN	Page
1	85636363	SCREW HS M4x16	2	UN			85636363	
2	85636728	WASHER 4x10	2	UN			85636728	
3	85429553	NUT M4	2	UN			85429553	

RELEASE COIL ASSEMBLY

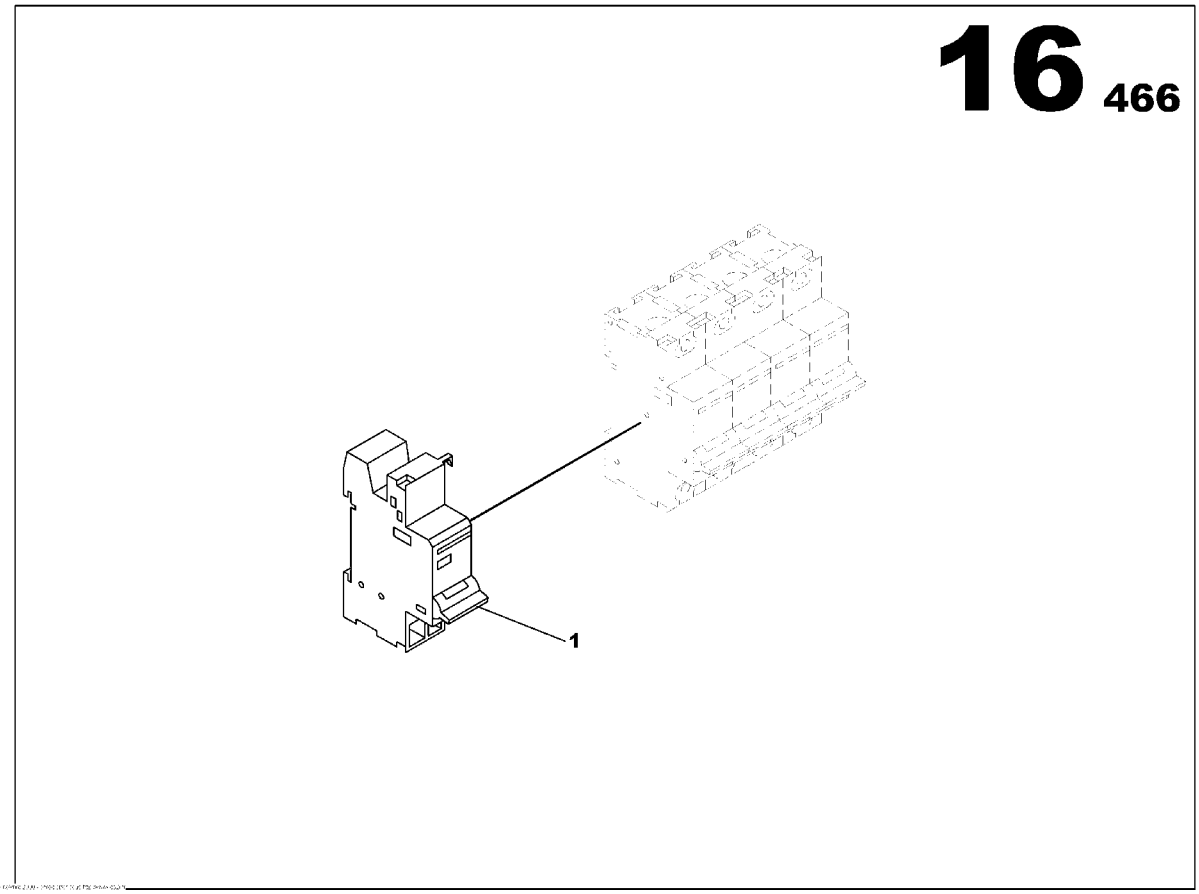

RELEASE COIL ASSEMBLY

85635738

Part numbers listed are only parts used in this model

Item	Part No.	Description	Qty	Un	From SN	To SN	Order PN	Page
1	85408516	CIRCUIT BREAKER SHUNT RELEASE COIL 220/415VAC	1	UN			85408516	

3 WAY FUEL VALVES OPTION

Non illustré
Not illustrated

3 WAY FUEL VALVES OPTION

Part numbers listed are only parts used in this model

Item	Part No.	Description	Qty	Un	From SN	To SN	Order PN	Page
1	85633246	3 WAY FUEL VALVE ASSEMBLY	1	UN			85633246	291

3 WAY FUEL VALVE ASSEMBLY

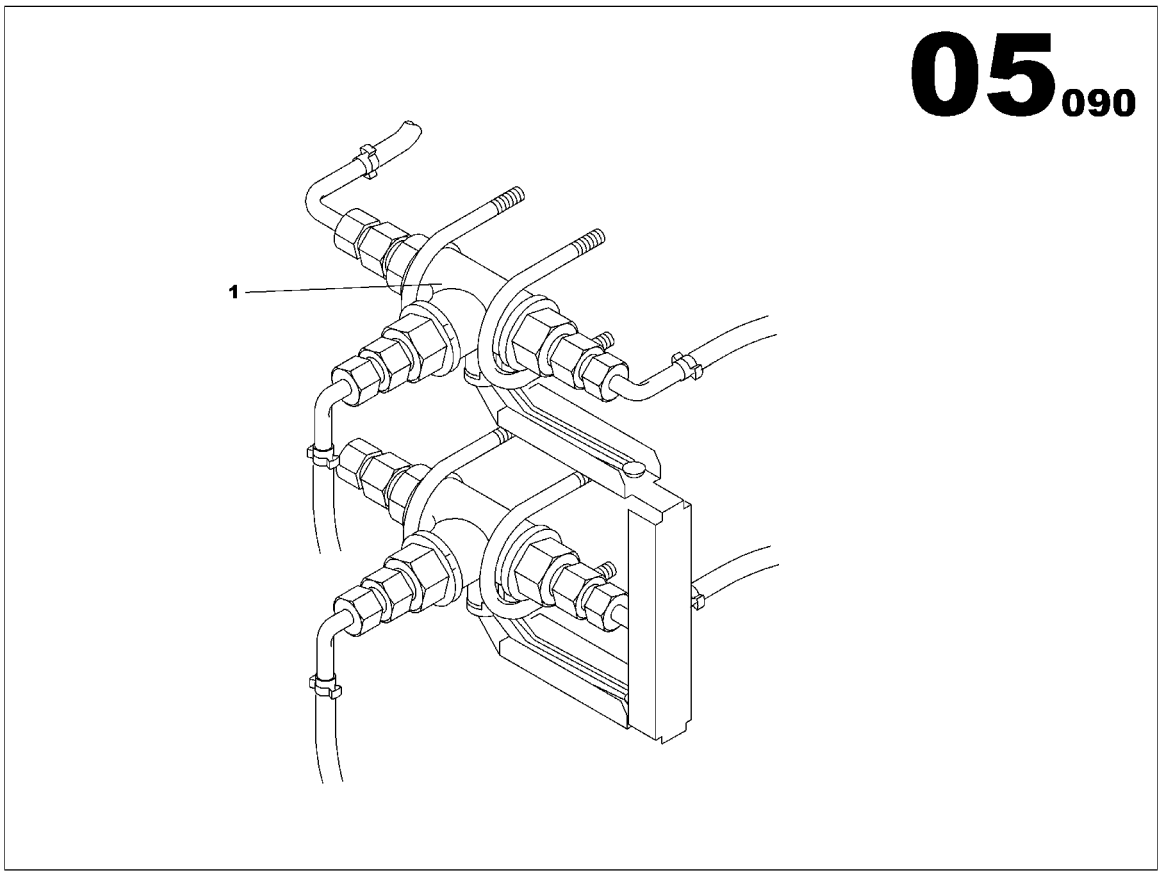

3 WAY FUEL VALVE ASSEMBLY
85633246

Part numbers listed are only parts used in this model

Item	Part No.	Description	Qty	Un	From SN	To SN	Order PN	Page
1	85633329	3 WAY FUEL VALVE ASSEMBLY	1	UN	02011031		85633329	293

3 WAY FUEL VALVE ASSEMBLY

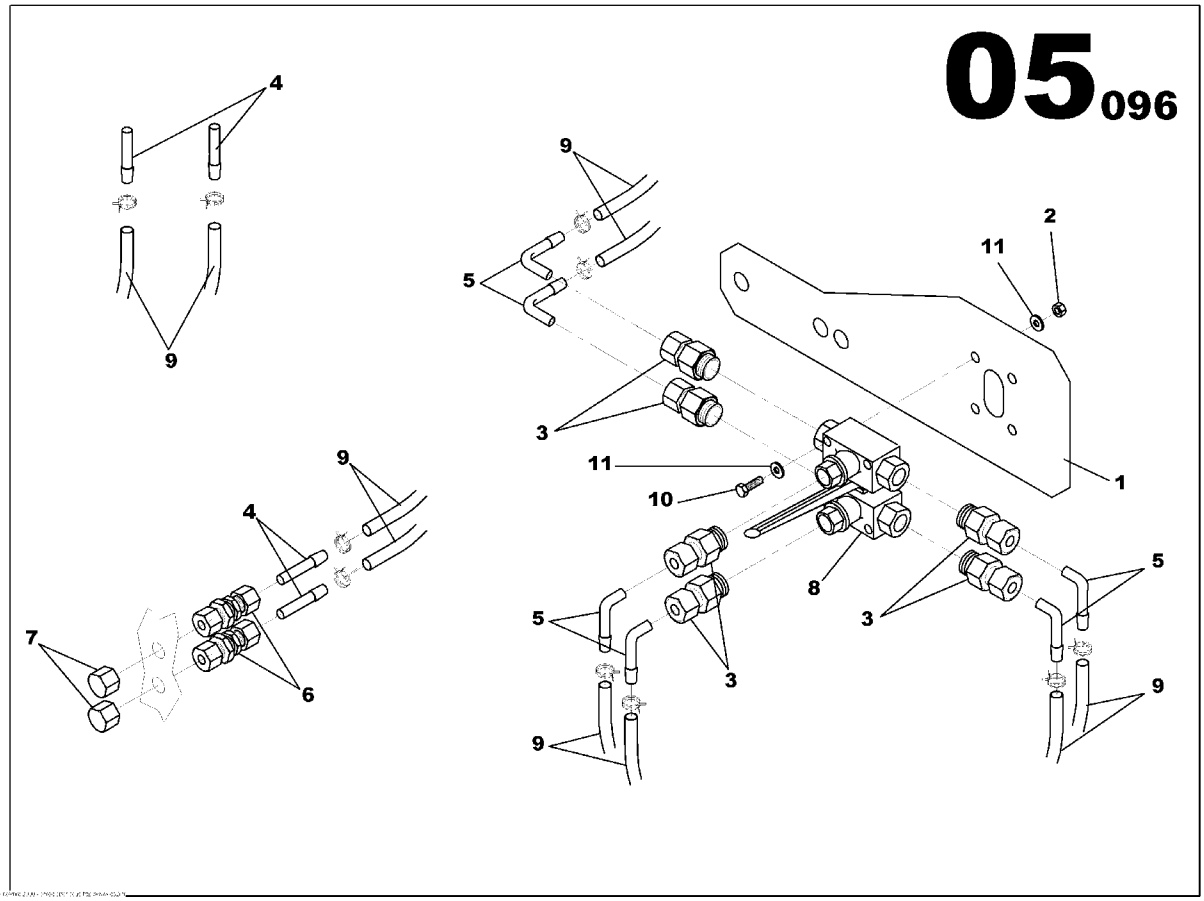

3 WAY FUEL VALVE ASSEMBLY
85633329

Part numbers listed are only parts used in this model

Item	Part No.	Description	Qty	Un	From SN	To SN	Order PN	Page
1	85633295	3 WAY FUEL VALVE BRACKET	1	UN			85633295	
2	85429959	NUT M5	4	UN			85429959	
3	85430452	PIPE UNION REDUCER MAL/FEM 3/8G D6	6	UN			85430452	
4	85430460	PIPE UNION MAL/MAL D6	4	UN			85430460	
5	85430478	PIPE UNION ELBOW MAL/MAL D6	6	UN			85430478	
6	85430486	PIPE UNION FEM/FEM D6	2	UN			85430486	
7	85625002	PLUG D06	2	UN			85625002	
8	85631802	3 WAY VALVE	1	UN			85631802	
9	85416428	FLEXIBLE HOSE D5.5	3	ML			85416428	
10	85632206	SCREW H M5x45	4	UN			85632206	
11	85429967	WASHER 5x12	8	UN			85429967	

REINFORCED INSULATION OPTION

Non illustré
Not illustrated

REINFORCED INSULATION OPTION

Part numbers listed are only parts used in this model

Item	Part No.	Description	Qty	Un	From SN	To SN	Order PN	Page
1	85429108	ALTERNATOR LS 422S	1	UN			85429108	

Index

Part number	Order number	Page
85413920	85413920	6
85429090	85429090	32
85429108	85429108	296
85416162	85416162	42
85415404	85415404	42
85415412	85415412	42
85413201	85413201	192
85415214	85415214	38
85414837	85414837	36
85414894	85414894	190
85429157	85429157	192
85403426	85403426	16
85403434	85403434	16
85415222	85415222	14
85416147	85416147	54
85403517	85403517	56
85629541	85629541	54
85403525	85403525	48
85633220	85633220	44
85633246	85633246	290
85633295	85633295	294
85633311	85633311	48
85633329	85633329	292
17130121	17130121	54
85633378	85633378	46
17130154	17130154	54
85633386	85633386	86
17130170	17130170	52
		44
17130196	17130196	54

Part number	Order number	Page
85403699	85403699	68
85403707	85403707	68
85403715	85403715	68
85402543	85402543	126
85412948	85412948	130
85413268	85413268	130
85412872	85412872	130
85403723	85403723	68
85633410	85633410	68
17130238	17130238	66
		64
85416386	85416386	10
85413581	85413581	10
85414613	85414613	6
85413433	85413433	10
85412823	85412823	10
85412880	85412880	10
85425379	85425379	10
85414530	85414530	70
85414563	85414563	72
85414944	85414944	70
85413805	85413805	74
85413854	85413854	76
85496925	85496925	74
85626893	85626893	76
85633832	85633832	74
85417459	85417459	60
85496982	85496982	6
17130279	17130279	54
17130287	17130287	54

Part number	Order number	Page
17130295	17130295	62
85416055	85416055	84
85416063	85416063	84
85415628	85415628	42
85415636	85415636	42
85415644	85415644	42
17130303	17130303	84
17130329	17130329	82
		80
85400018	85400018	38
85400026	85400026	38
85415495	85415495	84
85634079	85634079	78
85627487	85627487	38
17130378	17130378	84
17130386	17130386	84
85492700	85492700	94
17130394	17130394	84
85415354	85415354	94
85415362	85415362	94
85415347	85415347	94
85415370	85415370	94
85412484	85412484	94
85412492	85412492	94
85413516	85413516	94
85497410	85497410	94
85497428	85497428	94
85497436	85497436	94
85415313	85415313	94
85509594	85509594	94

Index

Part number	Order number	Page
85634194	85634194	92
85634202	85634202	90
85509560	85509560	94
85509578	85509578	94
85509586	85509586	94
85632982	85632982	72
85633048	85633048	94
85633055	85633055	94
85633063	85633063	94
85634319	85634319	94
85406130	85406130	94
85406130	85406130	154
85406189	85406189	154
85630515	85630515	260
85630515	85630515	202
85630515	85630515	172
85630515	85630515	204
85630515	85630515	258
85630515	85630515	174
85509305	85509305	94
85416477	85416477	94
85416501	85416501	94
85412831	85412831	94
85402907	85402907	94
85402907	85402907	154
85406221	85406221	156
85406221	85406221	98
85406239	85406239	98
85406239	85406239	156
85406247	85406247	98
85406247	85406247	156
85632883	85632883	100
85632883	85632883	158
85509263	85509263	86
85621142	85621142	94
85509859	85509859	94
85509842	85509842	96
85412625	85412625	68
85634376	85634376	68
85634384	85634384	68
85505543	85505543	180
85505543	85505543	270
85505543	85505543	226
85505543	85505543	126
85505543	85505543	272
85505543	85505543	224
85505543	85505543	178
85416030	85416030	152
85415982	85415982	152
85412534	85412534	152
85415933	85415933	152
85415941	85415941	22
85407047	85407047	22
85501435	85501435	30
85491991	85491991	90
85407294	85407294	198
85407294	85407294	102
85407294	85407294	168
85407294	85407294	106
85407294	85407294	254
85636835	85636835	178
85636835	85636835	226
85636835	85636835	270
85636835	85636835	272
85636835	85636835	180
85636835	85636835	224
85636843	85636843	178
85636843	85636843	180
85636843	85636843	270
85636843	85636843	224
85636843	85636843	226
85636843	85636843	272
85636850	85636850	226
85636850	85636850	272
85636850	85636850	270
85636850	85636850	178
85636850	85636850	224
85636850	85636850	180
85636868	85636868	272
85636868	85636868	180
85636868	85636868	178
85636868	85636868	226
85636868	85636868	270
85636868	85636868	224
85634616	85634616	190
85634616	85634616	162
85634616	85634616	248
85634624	85634624	196
85634624	85634624	252
85634624	85634624	166

Index

Part number	Order number	Page
85634632	85634632	274
85634632	85634632	228
85634632	85634632	182
85634632	85634632	124
85634632	85634632	122
85634640	85634640	90
85634657	85634657	104
85634665	85634665	228
85634665	85634665	182
85634665	85634665	124
85634665	85634665	122
85634665	85634665	274
85634673	85634673	182
85634673	85634673	274
85634673	85634673	228
85634681	85634681	182
85634681	85634681	274
85634681	85634681	228
85634699	85634699	182
85634699	85634699	228
85634699	85634699	274
85634699	85634699	124
85634699	85634699	122
85634707	85634707	124
85634707	85634707	122
85634715	85634715	226
85634715	85634715	180
85634715	85634715	270
85634715	85634715	178
85634715	85634715	272
85634715	85634715	224
85634723	85634723	116
85634731	85634731	120
85634749	85634749	124
85634749	85634749	122
17130428	17130428	60
85415537	85415537	154
85414829	85414829	150
85414860	85414860	152
85407682	85407682	154
85407690	85407690	152
85407708	85407708	152
85416048	85416048	152
85415545	85415545	152
85499150	85499150	150
85634772	85634772	28
85621175	85621175	148
85634780	85634780	114
85634814	85634814	134
85634822	85634822	238
85634822	85634822	248
85634939	85634939	96
85621191	85621191	96
85634947	85634947	134
85635019	85635019	136
85635019	85635019	282
85635019	85635019	240
85635027	85635027	122
85635027	85635027	228
85635027	85635027	182
85635027	85635027	180
85635027	85635027	178
85635027	85635027	270
85635027	85635027	226
85635027	85635027	224
85635027	85635027	272
85635027	85635027	124
85635027	85635027	274
85635035	85635035	140
85635175	85635175	106
85635183	85635183	250
85635183	85635183	128
85635183	85635183	164
85635183	85635183	194
85635209	85635209	250
85635209	85635209	164
85635209	85635209	194
85635225	85635225	190
85635225	85635225	248
85635225	85635225	162
85635233	85635233	18
85635241	85635241	106
85635241	85635241	168
85635241	85635241	254
85635241	85635241	198
85635266	85635266	22
85635308	85635308	214
85635308	85635308	188
85635308	85635308	280
85635308	85635308	212

Index

Part number	Order number	Page
85636876	85636876	214
85636876	85636876	212
85635316	85635316	236
85636884	85636884	214
85636884	85636884	212
85416279	85416279	22
85499440	85499440	150
85499440	85499440	140
85408227	85408227	110
85635357	85635357	190
85635357	85635357	162
85635357	85635357	248
85636892	85636892	264
85636892	85636892	266
85504017	85504017	272
85504017	85504017	180
85504017	85504017	178
85504017	85504017	270
85504017	85504017	226
85504017	85504017	224
85636900	85636900	218
85636900	85636900	216
85504025	85504025	180
85504025	85504025	178
85504025	85504025	272
85504025	85504025	270
85504025	85504025	226
85504025	85504025	224
85506541	85506541	218
85506541	85506541	216

Part number	Order number	Page
85636918	85636918	210
85636918	85636918	208
85506517	85506517	208
85506517	85506517	210
85636926	85636926	210
85636926	85636926	208
85630663	85630663	222
85630663	85630663	220
85636942	85636942	266
85636942	85636942	264
85630721	85630721	222
85630721	85630721	220
85635373	85635373	282
85635373	85635373	136
85635373	85635373	240
85504033	85504033	174
85504033	85504033	172
85504033	85504033	258
85504033	85504033	260
85504033	85504033	204
85504033	85504033	202
85635399	85635399	190
85635415	85635415	162
85635415	85635415	248
85635423	85635423	140
85635456	85635456	240
85635456	85635456	136
85635456	85635456	282
85635472	85635472	140
85635548	85635548	140

Part number	Order number	Page
85635563	85635563	140
85635589	85635589	136
85635589	85635589	282
85635589	85635589	240
85635621	85635621	254
85635621	85635621	168
85635621	85635621	198
85635654	85635654	142
85635662	85635662	134
85626943	85626943	20
85635688	85635688	22
85638914	85638914	90
85416519	85416519	126
85408334	85408334	110
85621233	85621233	150
85408391	85408391	182
85408391	85408391	180
85408391	85408391	178
85408391	85408391	272
85408391	85408391	274
85408391	85408391	270
85408391	85408391	228
85408391	85408391	226
85408391	85408391	224
85408391	85408391	122
85408391	85408391	126
85502235	85502235	68
85413185	85413185	240
85413185	85413185	136
85413185	85413185	282

Index

Part number	Order number	Page
85408516	85408516	288
85408516	85408516	246
85635738	85635738	248
85635738	85635738	238
85495893	85495893	144
85635746	85635746	134
85402527	85402527	126
85506061	85506061	106
85506061	85506061	168
85506061	85506061	254
85506061	85506061	198
85413276	85413276	180
85413276	85413276	178
85413276	85413276	224
85413276	85413276	272
85413276	85413276	270
85413276	85413276	226
85408656	85408656	180
85408656	85408656	178
85408656	85408656	224
85408656	85408656	226
85408656	85408656	272
85408656	85408656	270
85408664	85408664	126
85408680	85408680	150
85408680	85408680	140
85408706	85408706	282
85408706	85408706	136
85408706	85408706	240
85413466	85413466	126

Part number	Order number	Page
17130550	17130550	128
17130568	17130568	128
85402477	85402477	126
17130576	17130576	146
85627222	85627222	126
85408854	85408854	180
85408854	85408854	178
85408854	85408854	272
85408854	85408854	270
85408854	85408854	124
85408854	85408854	226
85408854	85408854	224
85413052	85413052	128
85414191	85414191	22
85412955	85412955	126
85408888	85408888	22
85408896	85408896	22
85408896	85408896	124
85413292	85413292	22
85408912	85408912	22
85408912	85408912	124
85412971	85412971	128
85496222	85496222	234
85635845	85635845	190
85412930	85412930	126
85415503	85415503	124
85416527	85416527	124
85413250	85413250	126
17130584	17130584	128
17130592	17130592	128

Part number	Order number	Page
85501575	85501575	150
85501575	85501575	140
85501575	85501575	30
85499663	85499663	106
85499663	85499663	168
85499663	85499663	254
85499663	85499663	198
85499689	85499689	150
85415792	85415792	24
85508570	85508570	268
85426112	85426112	262
85426112	85426112	176
85426112	85426112	206
85426138	85426138	176
85426138	85426138	262
85426138	85426138	206
85426146	85426146	176
85426146	85426146	262
85426146	85426146	206
85426120	85426120	176
85426120	85426120	132
85426120	85426120	262
85426120	85426120	206
85635860	85635860	26
85635878	85635878	22
85623809	85623809	222
85623809	85623809	220
17130618	17130618	150
85635886	85635886	282
85635886	85635886	240

Index

Part number	Order number	Page
85504272	85504272	266
85504272	85504272	264
85623668	85627495	180
85623668	85627495	178
85623668	85627495	272
85623668	85627495	270
85623668	85627495	226
85623668	85627495	224
85635894	85635894	182
85635894	85635894	274
85635894	85635894	126
85635894	85635894	228
85635894	85635894	122
85635902	85635902	182
85635902	85635902	274
85635902	85635902	126
85635902	85635902	228
85635902	85635902	122
85635944	85635944	136
85635944	85635944	282
85635944	85635944	240
85635951	85635951	140
85635969	85635969	140
85635993	85635993	140
85636033	85636033	282
85636033	85636033	240
85636033	85636033	136
85505154	85505154	176
85505154	85505154	262
85505154	85505154	206

Part number	Order number	Page
85636058	85636058	282
85636058	85636058	136
85636058	85636058	240
17130626	17130626	134
85639086	85639086	110
85631422	85631422	108
85631422	85631422	168
85631422	85631422	254
85631422	85631422	126
85631422	85631422	198
85632362	85632362	108
85632362	85632362	126
85632370	85632370	106
17130683	17130683	152
85639250	85639250	174
85639250	85639250	172
85639250	85639250	204
85639250	85639250	202
85636991	85636991	260
85636991	85636991	258
85411551	85411551	190
85411551	85411551	162
85411569	85411569	248
85636157	85636157	190
85636181	85636181	190
17130691	17130691	248
85636231	85636231	190
85636249	85636249	190
85636272	85636272	190
85636272	85636272	162

Part number	Order number	Page
85636272	85636272	248
17130733	17130733	238
85636280	85636280	118
85636298	85636298	180
85636298	85636298	178
85636298	85636298	272
85636298	85636298	270
85636298	85636298	226
85636298	85636298	224
17130741	17130741	190
17130741	17130741	162
17130741	17130741	248
17130758	17130758	118
85636314	85636314	120
85413474	85413474	16
85413359	85413359	16
85409084	85409084	152
85409084	85409084	136
85409084	85409084	282
85409084	85409084	240
85409092	85409092	282
85409092	85409092	240
85409092	85409092	136
85409126	85409126	152
85409175	85409175	116
85636330	85636330	138
85636330	85636330	242
85636330	85636330	284
85626356	85626356	112
85639326	85639326	112

Index

Part number	Order number	Page
85636348	85636348	140
85429553	85429553	286
85429553	85429553	244
85429959	85429959	294
85507911	85507911	50
85507911	85507911	112
85507911	85507911	138
85507911	85507911	242
85507911	85507911	284
85507929	85507929	112
85409217	85409217	152
85409225	85409225	160
85409233	85409233	160
85409241	85409241	160
85636363	85636363	286
85636363	85636363	244
17130766	17130766	124
85636389	85636389	50
85636389	85636389	180
85636389	85636389	178
85636389	85636389	272
85636389	85636389	270
85636389	85636389	226
85636389	85636389	224
85636421	85636421	48
85636439	85636439	282
85636439	85636439	136
85636439	85636439	240
85636454	85636454	282
85636454	85636454	240

Part number	Order number	Page
85639391	85639391	110
85509222	85509222	56
85430452	85430452	294
85415735	85415735	40
85409274	85409274	48
85416485	85416485	40
85409282	85409282	48
85416493	85416493	16
85430460	85430460	294
85430478	85430478	294
85409308	85409308	16
85430486	85430486	294
85625002	85625002	294
85490787	85490787	74
85429421	85429421	74
85500544	85500544	12
85412922	85412922	10
85409399	85409399	10
85417772	85417772	60
17130816	17130816	58
85621266	85621266	50
17130824	17130824	40
17130824	17130824	58
85490811	85490811	62
85413748	85413748	40
85409522	85409522	48
85409522	85409522	16
85413755	85413755	192
85413722	85413722	96
85416469	85416469	40

Part number	Order number	Page
85631802	85631802	294
85416436	85416436	40
85416436	85416436	58
85416428	85416428	14
85416428	85416428	14
85416428	85416428	14
85416428	85416428	294
85416428	85416428	50
85414654	85414654	6
85429587	85429587	10
85506467	85506467	86
85505634	85505634	126
85505634	85505634	120
85413797	85413797	126
85501377	85501377	80
85500197	85500197	88
85500221	85500221	88
85503746	85503746	86
85636553	85636553	86
85636587	85636587	186
85636587	85636587	180
85636587	85636587	178
85636587	85636587	278
85636587	85636587	272
85636587	85636587	270
85636587	85636587	232
85636587	85636587	226
85636587	85636587	224
85636595	85636595	180
85636595	85636595	178

Index

Part number	Order number	Page
85636595	85636595	272
85636595	85636595	270
85636595	85636595	226
85636595	85636595	224
85636611	85636611	186
85636611	85636611	278
85636611	85636611	232
85639573	85639573	170
85639573	85639573	256
85639573	85639573	200
85639599	85639599	190
85639599	85639599	162
85639599	85639599	248
85636652	85636652	284
85636652	85636652	138
85636652	85636652	242
85632016	85632016	96
85400075	85400075	8
85426252	85426252	8
85400091	85400091	8
85621555	85621555	8
85400190	85400190	8
85400208	85400208	8
85400299	85400299	8
85401321	85401321	8
85425569	85425569	8
85400349	85400349	8
85491546	85491546	8
85636678	85636678	8
85426054	85426054	8

Part number	Order number	Page
85508182	85508182	8
85625382	85625382	8
85621522	85621522	8
85636686	85636686	8
85402451	85402451	34
85425858	85425858	34
85425866	85425866	34
85425882	85425882	34
85425965	85425965	34
85508745	85508745	34
85508851	85508851	34
85508893	85508893	34
85508943	85508943	34
85508992	85508992	34
85509032	85509032	34
85509073	85509073	34
85426815	85426815	8
85426849	85426849	8
85400646	85400646	12
85400695	85400695	12
85501252	85501252	12
85501278	85501278	12
85636975	85636975	218
85636975	85636975	216
85506657	85506657	210
85506657	85506657	208
85506640	85506640	210
85506640	85506640	208
85402519	85402519	180
85402519	85402519	178

Part number	Order number	Page
85402519	85402519	272
85402519	85402519	270
85402519	85402519	226
85402519	85402519	224
17130881	17130881	124
17130899	17130899	126
17130907	17130907	124
17130915	17130915	124
85505717	85505717	126
85505691	85505691	124
17130923	17130923	124
17130931	17130931	124
17130949	17130949	124
17130956	17130956	124
17130964	17130964	124
17130972	17130972	124
17130980	17130980	124
17130998	17130998	124
17131004	17131004	124
17131012	17131012	124
17131020	17131020	124
17131038	17131038	124
17131046	17131046	126
17131053	17131053	126
17131061	17131061	126
17131079	17131079	126
17131087	17131087	126
17131095	17131095	126
17131103	17131103	128
85503522	85503522	180

Index

Part number	Order number	Page
85503522	85503522	178
85503522	85503522	272
85503522	85503522	270
85503522	85503522	226
85503522	85503522	224
17131111	17131111	126
85636694	85636694	182
85636694	85636694	274
85636694	85636694	122
85636694	85636694	228
17131137	17131137	126
85636702	85636702	26
17131145	17131145	128
85636710	85636710	140
17131152	17131152	128
85632206	85632206	294
85410140	85410140	152
85410157	85410157	112
85636728	85636728	286
85636728	85636728	244
85429967	85429967	294
85636736	85636736	140
85429793	85429793	112
85429793	85429793	50
85636744	85636744	284
85636744	85636744	242
85636744	85636744	138
85636751	85636751	140

Part number	Order number	Page	Part number	Order number	Page