INGERSOLL-RAND

G160

PARTS MANUAL

17135591

Doosan purchased Bobcat Company from Ingersoll-Rand Company in 2007. Any reference to Ingersoll-Rand Company or use of trademarks, service marks, logos, or other proprietary identifying marks belonging to Ingersoll-Rand Company in this manual is historical or nominative in nature, and is not meant to suggest a current affiliation between Ingersoll-Rand Company and Doosan Company or the products of either.

G160 EDITION:13/05/2004

33519017401

Revised (01-13)

AFTERMARKET - 50 Hertz Generators

For more information on how to order parts or information regarding your local distributor (Europe, Middle East, Africa) please contact:

Facility Details **Coordonnées du Site** **Unternehmensdetails** **Dirección**	Ingersoll-Rand European Sales Ltd Portable Power Paragon Business Park Chorley New Road, Horwich Bolton BL6 6JN United Kingdom
Telephone **Téléphone** **Telefon** **Teléfono**	+44 (0) 1204 690 690
Fax	+44 (0) 1204 690 366
Emergency order phone **Numéro d'urgence pour commandes** **Dringende Aufträge, Telefon** **Teléfono de pedidos de urgencia**	+44 (0) 777 6170921
Office hours **Heures d'ouverture** **Bürostunden** **Horas de oficina**	Mon-Fri 8:00am to 4:30pm (GMT)

Telephone contact directory
Numéros des contacts
Telefonkontaktverzeichnis
Teléfonos de contacto

Harry Dale Aftermarket Marketing Manager	+44 (0) 1204 690 541
Malcolm Stott Marketing Analyst	+44 (0) 1204 690 396
Ian Parr Parts Co-ordinator	+44 (0) 1204 690 465
Howard Connolly Parts Co-ordinator	+44 (0) 1204 690 641
Martin James Parts Co-ordinator MEA	+44 (0) 1204 690 329

Imprimé avec FinePrint 2000 - enregistrer sous http://www.gs2.fr

G160

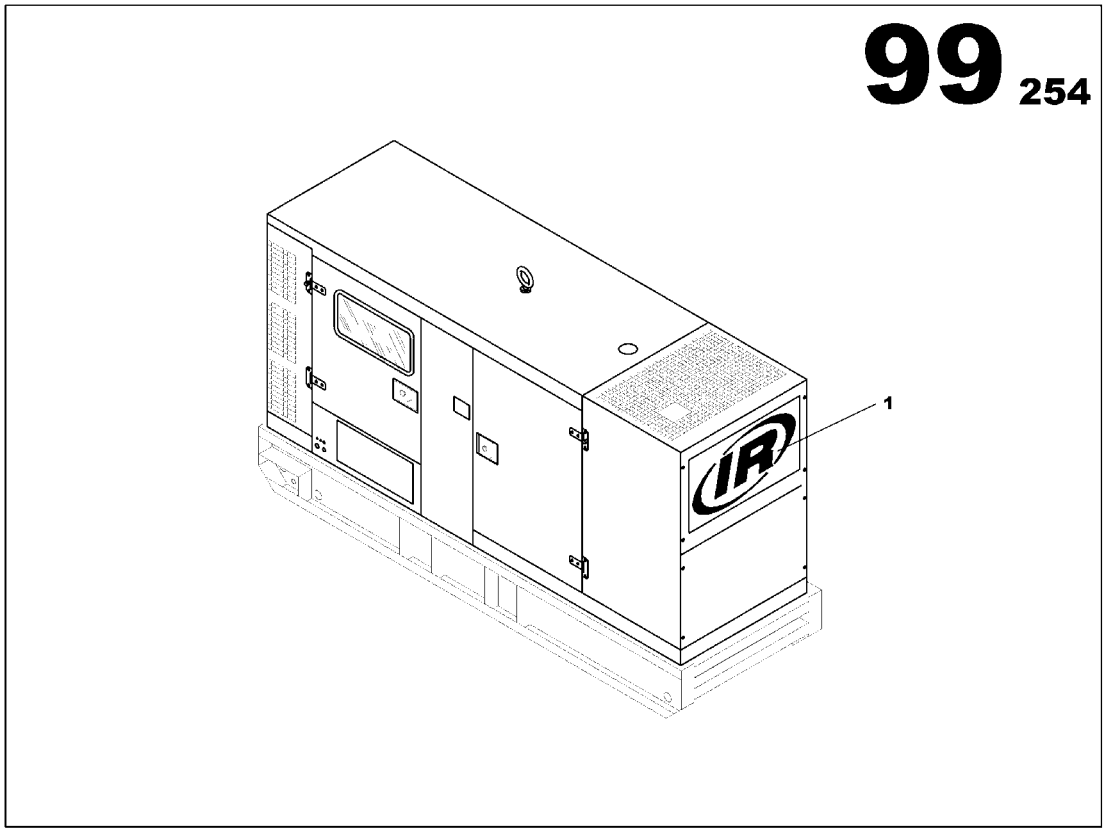

G160

Part numbers listed are only parts used in this model

Item	Part No.	Description	Qty	Un	From SN	To SN	Order PN	Page
1		G160 *-Basic Version*	1	UN				3
2		AUTO START OPTION	1	UN				201
3		ENGINE ELECTRONIC REGULATION OPTION	1	UN				219
4		3 WAY FUEL VALVES OPTION	1	UN				237
5		REINFORCED INSULATION OPTION	1	UN				243
6		EXPLOSIVE ATHOSPHERE OPTION	1	UN				247
7		DUAL FREQUENCY OPTION	1	UN				255

G160

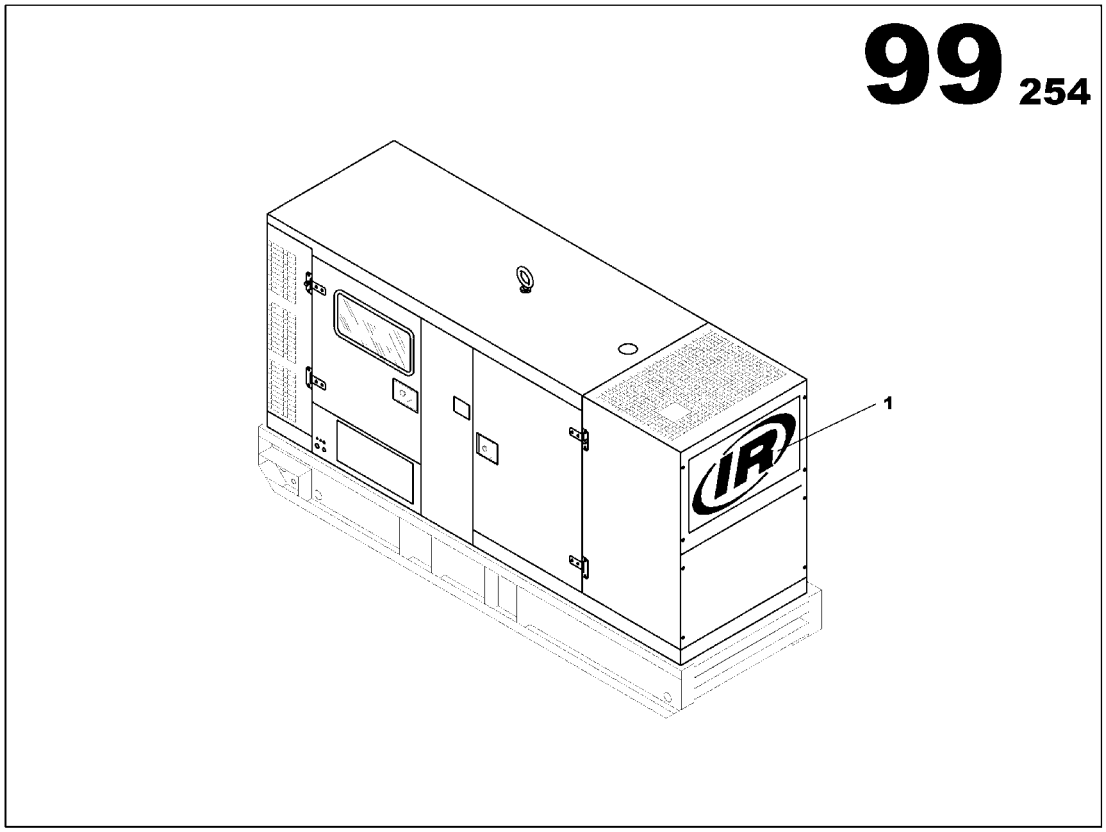

G160

Part numbers listed are only parts used in this model

Item	Part No.	Description	Qty	Un	From SN	To SN	Order PN	Page
1		ENGINE FUNCTION	1	UN				5
2		ALTERNATOR FUNCTION	1	UN				33
3		COOLER FUNCTION	1	UN				41
4		FUEL FUNCTION	1	UN				53
5		STARTING FUNCTION	1	UN				69
6		EXHAUST FUNCTION	1	UN				75
7		FRAME FUNCTION	1	UN				83
8		CANOPY FONCTION	1	UN				97
9		ELECTRICAL FUNCTION	1	UN				127

ENGINE FUNCTION

Non illustré
Not illustrated

ENGINE FUNCTION

Part numbers listed are only parts used in this model

Item	Part No.	Description	Qty	Un	From SN	To SN	Order PN	Page
1	85403020	ENGINE JD 6068HF SAE 3/11.5	1	UN			85403020	7
2	85403442	OIL SUMP DRAIN PUMP ASSEMBLY	1	UN			85403442	9
3	85404002	AIR FILTER HEAVY DUTY ASSEMBLY	1	UN			85404002	11
4	85404291	AIR HEATER ASSEMBLY	1	UN			85404291	15
6		ENGINE WIRING FUNCTION	1	UN				21

ENGINE JD 6068HF SAE 3/11.5

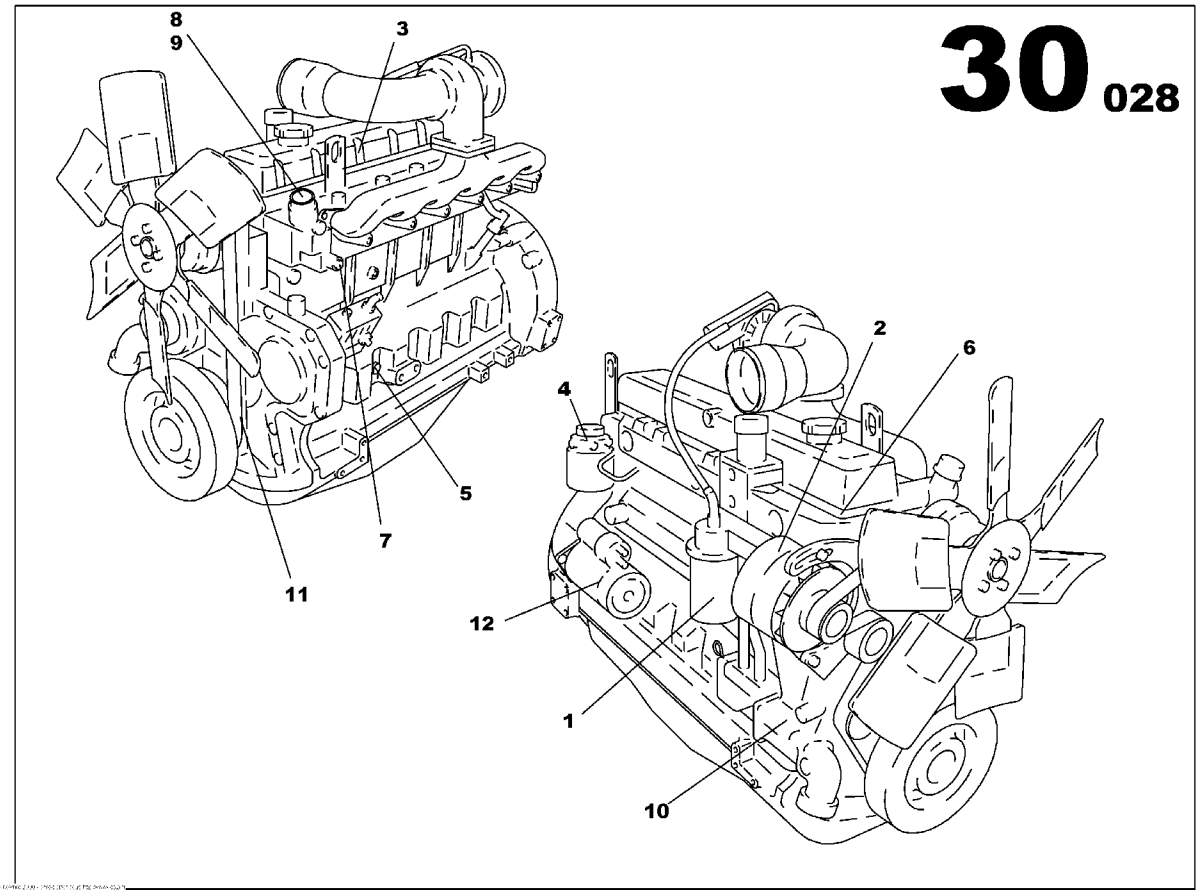

ENGINE JD 6068HF SAE 3/11.5
85403020

Part numbers listed are only parts used in this model

Item	Part No.	Description	Qty	Un	From SN	To SN	Order PN	Page
1	85639714	OIL FILTER	1	UN			85639714	
2	85626653	CHARGING ALTERNATOR	1	UN			85626653	
3	85400893	INJECTOR	6	UN			85400893	
4	85620508	FUEL FILTER	1	UN			85620508	
5	85401099	PRESSURE SWITCH	1	UN			85401099	
6	85401131	ROCKER COVER GASKET	1	UN			85401131	
7	85401164	TEMPERATURE SWITCH	1	UN			85401164	
8	85401180	THERMOSTAT	1	UN			85401180	
9	85621373	GASKET - THERMOSTAT	1	UN			85621373	
10	85639722	WATER PUMP	1	UN			85639722	
11	85400851	BELT	1	UN			85400851	
12	85628030	ELECTRICAL STARTER	1	UN			85628030	

OIL SUMP DRAIN PUMP ASSEMBLY

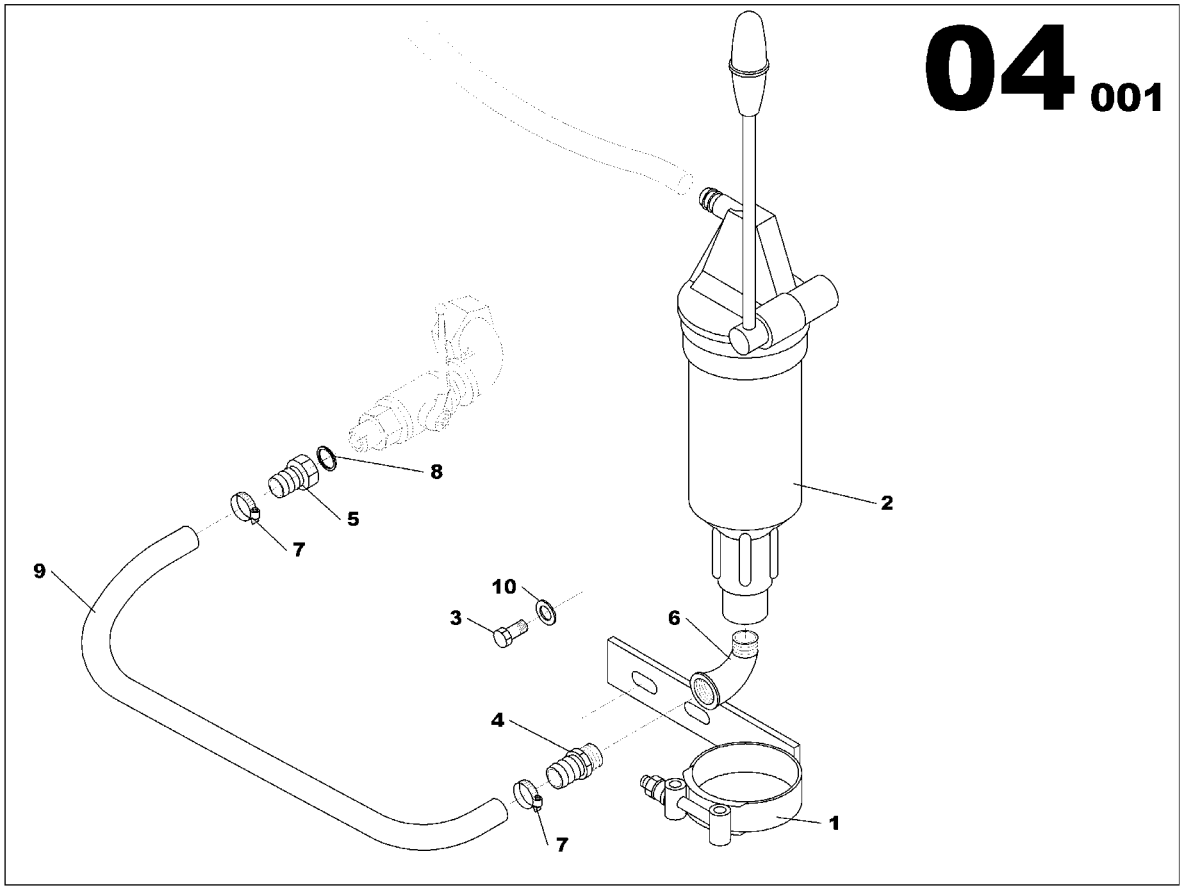

OIL SUMP DRAIN PUMP ASSEMBLY
85403442

Part numbers listed are only parts used in this model

Item	Part No.	Description	Qty	Un	From SN	To SN	Order PN	Page
1	85403426	OIL SUMP PUMP BRACKET	1	UN			85403426	
2	85403434	MANUAL PUMP	1	UN			85403434	
3	85409209	SCREW H M12x25	2	UN			85409209	
4	85409258	PIPE UNION MAL/MAL 3/8G	1	UN			85409258	
5	85492551	PIPE UNION FEMAL/MAL 1/2G	1	UN			85492551	
6	85409308	PIPE UNION ELBOW 90° MAL/FEM 3/8G	1	UN			85409308	
7	85417756	HOSE CLIP D16/27	2	UN			85417756	
8	85410298	GASKET D14x18	1	UN			85410298	
9	85409597	FLEXIBLE HOSE D15x23	0.65	ML			85409597	
10	85410165	WASHER D12x24	2	UN			85410165	

AIR FILTER HEAVY DUTY ASSEMBLY

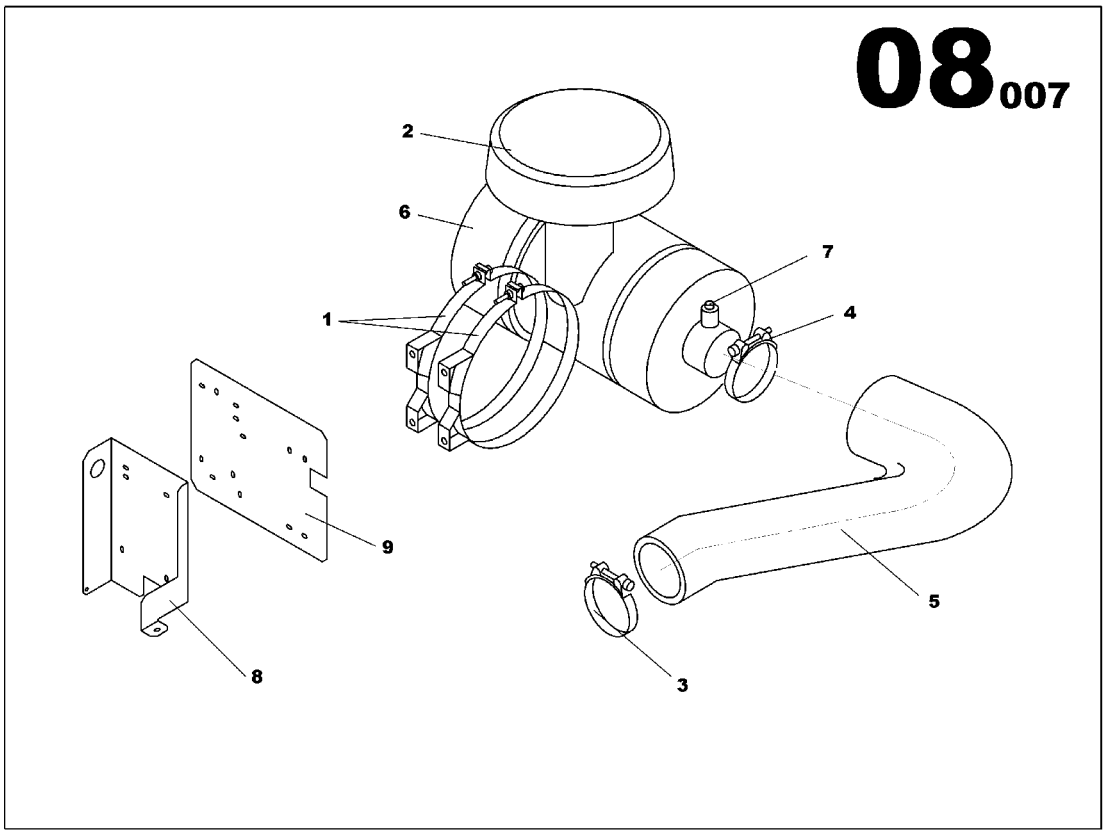

AIR FILTER HEAVY DUTY ASSEMBLY
85404002

Part numbers listed are only parts used in this model

Item	Part No.	Description	Qty	Un	From SN	To SN	Order PN	Page
1	85403848	AIR CLEANER CLAMP D330	2	UN			85403848	
2	85403863	RAIN CAP	1	UN			85403863	
3	85409407	HOSE CLIP D70/90	1	UN	01003816		85409407	
4	85409415	HOSE CLIP D120/140	1	UN	01003816		85409415	
5	85509156	RUBBER HOSE ELBOW D76	1	UN	01003816		85509156	
6	85403921	AIR FILTER HEAVY DUTY	1	UN			85403921	13
7	85410108	AIR RESTRICTION INDICATOR	1	UN			85410108	
8	85404069	AIR FILTER BRACKET JD 4039	1	UN			85404069	
9	85404101	AIR FILTER BRACKET JD 4039/4045/6068	1	UN			85404101	

AIR FILTER HEAVY DUTY

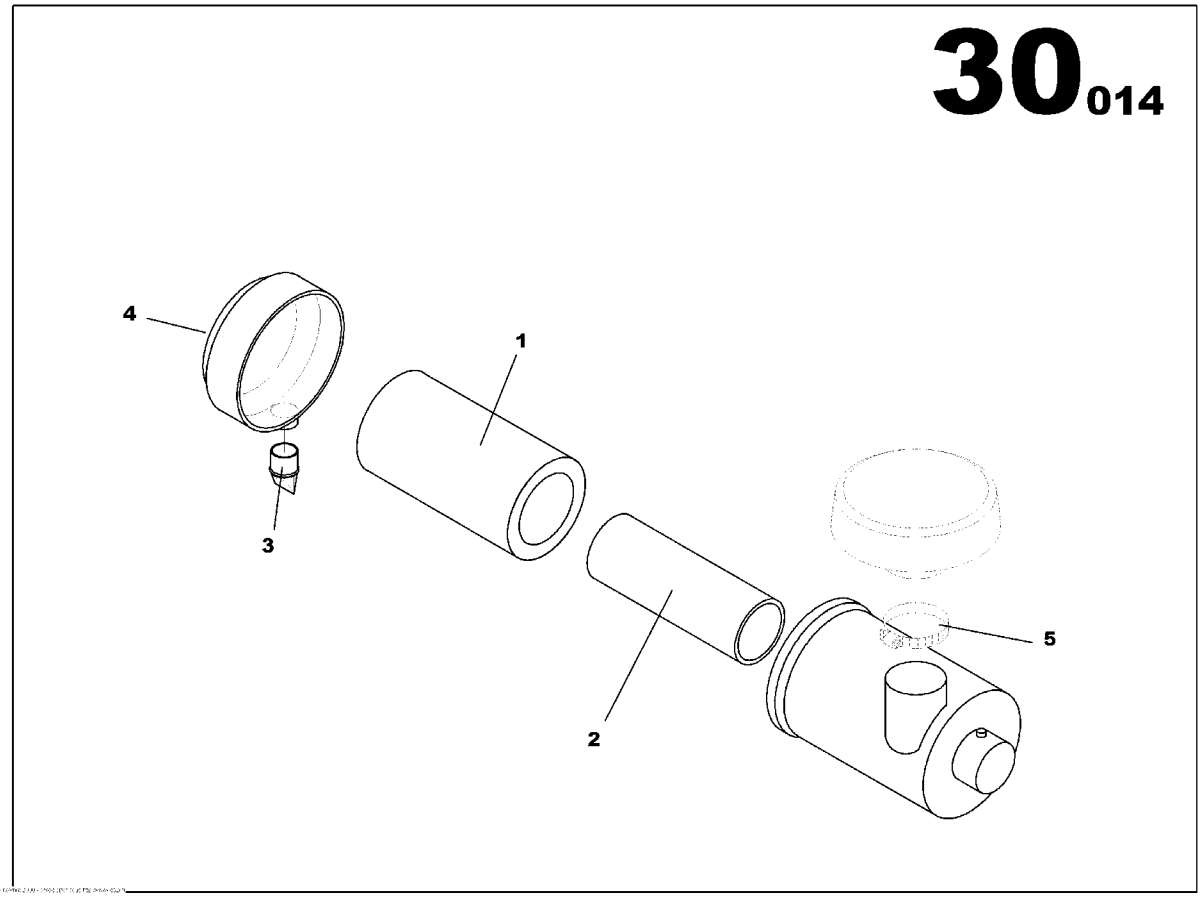

AIR FILTER HEAVY DUTY
85403921

Part numbers listed are only parts used in this model

Item	Part No.	Description	Qty	Un	From SN	To SN	Order PN	Page
1	85400737	FILTER ELEMENT	1	UN			85400737	
2	85400786	FILTER ELEMENT	1	UN			85400786	
3	85501229	VACUATOR VALVE	1	UN			85501229	
4	85501294	DUST CUP	1	UN			85501294	
5	85501872	HOSE CLIP D140/160	1	UN			85501872	

AIR HEATER ASSEMBLY

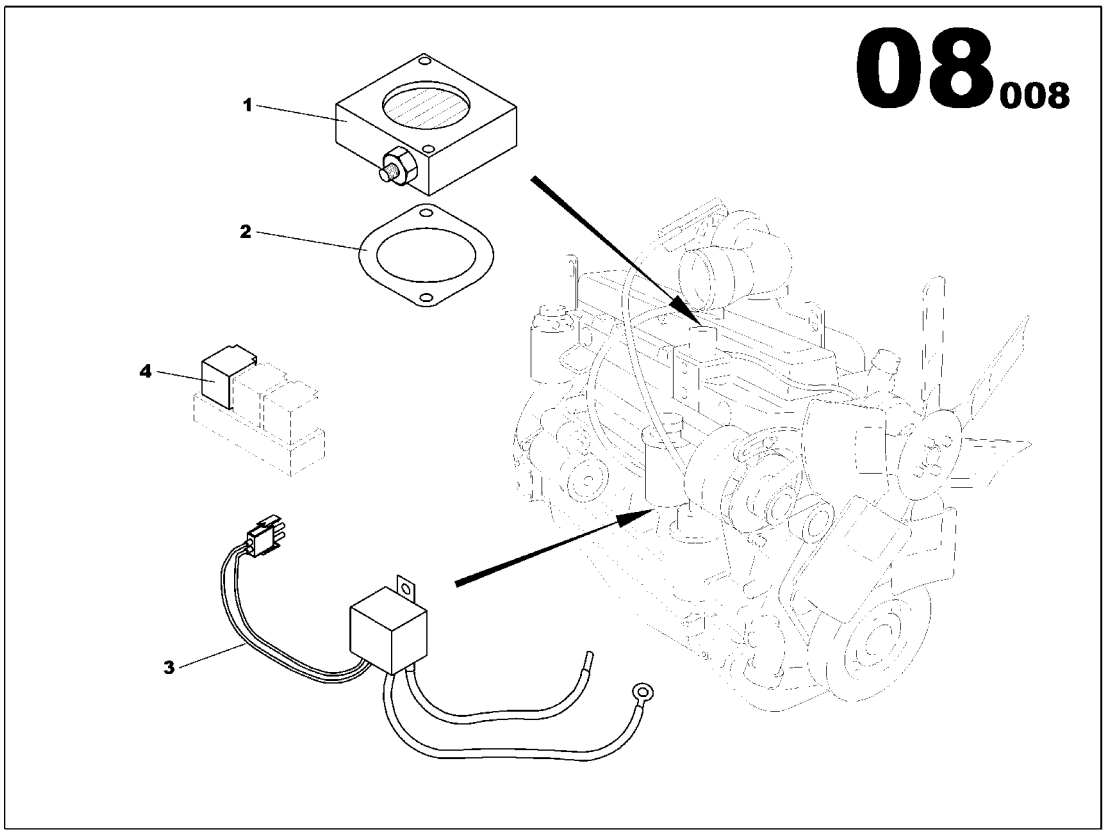

AIR HEATER ASSEMBLY
85404291

Part numbers listed are only parts used in this model

Item	Part No.	Description	Qty	Un	From SN	To SN	Order PN	Page
1	17131624	AIR HEATER ASSEMBLY	1	UN	04002241		17131624	19
1	85404267	AIR HEATER RESISTANCE 1200W 12V	1	UN	0	04002240	85404267	
2	85637569	SQARE FLANGE GASKET	1	UN	0	04002240	85637569	
3	85408201	ENGINE AIR PRE HEATING WIRING LOOM JD6068	1	UN			85408201	17
4	85408896	RELAY 12V 20/30A	1	UN			85408896	

ENGINE AIR PRE HEATING WIRING LOOM JD6068

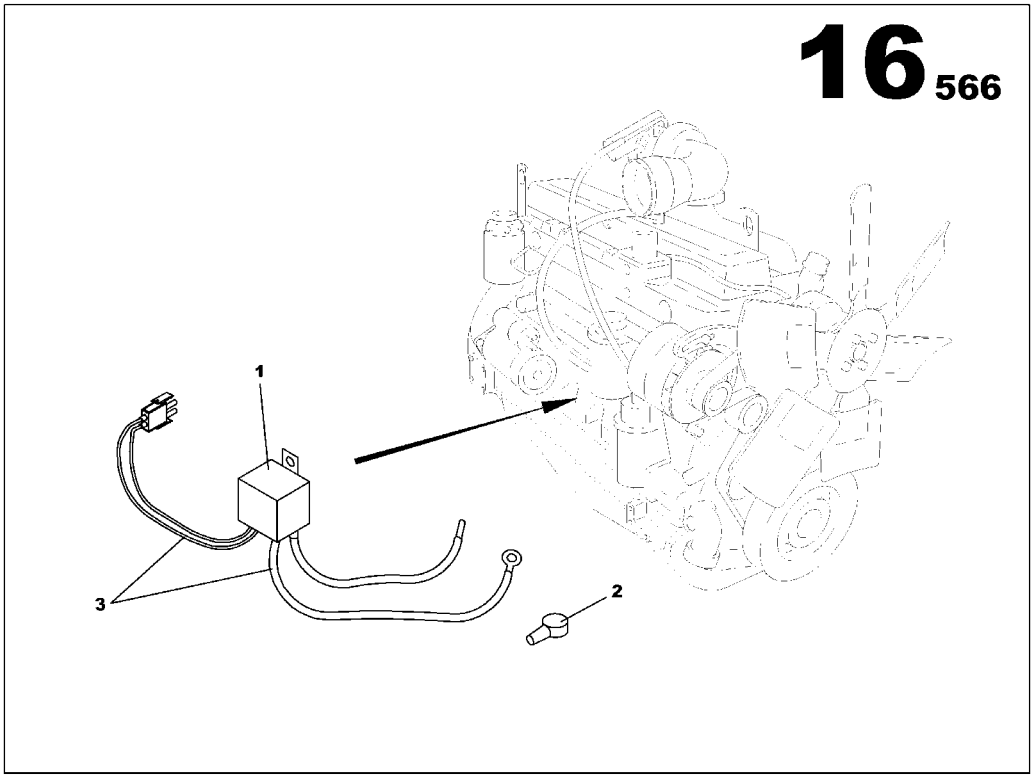

ENGINE AIR PRE HEATING WIRING LOOM JD6068
85408201

Part numbers listed are only parts used in this model

Item	Part No.	Description	Qty	Un	From SN	To SN	Order PN	Page
1	85408938	RELAY 12V 180A	1	UN			85408938	
2	85623833	COWL	1	UN			85623833	
3	85408177	AIR HEATER WIRING LOOM JD 6068	1	UN			85408177	

AIR HEATER ASSEMBLY

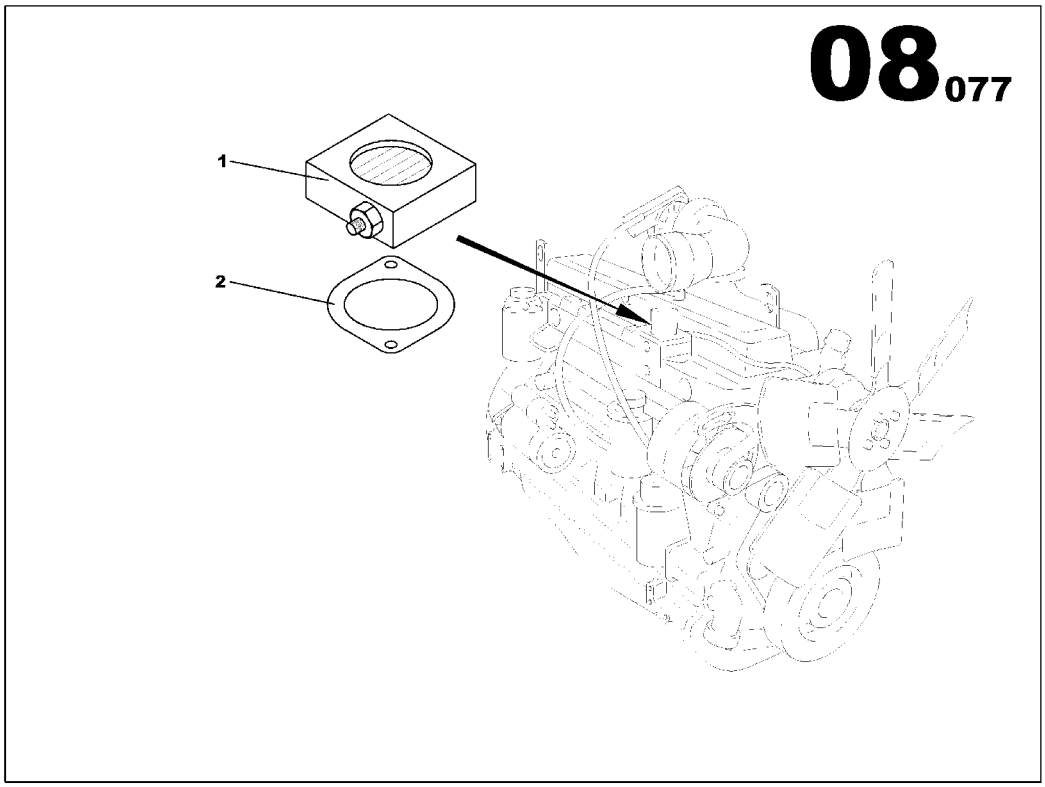

AIR HEATER ASSEMBLY
17131624

Part numbers listed are only parts used in this model

Item	Part No.	Description	Qty	Un	From SN	To SN	Order PN	Page
1	85404267	AIR HEATER RESISTANCE 1200W 12V	1	UN			85404267	
2	85637569	SQARE FLANGE GASKET	1	UN			85637569	

ENGINE WIRING FUNCTION

Non illustré
Not illustrated

ENGINE WIRING FUNCTION

Part numbers listed are only parts used in this model

Item	Part No.	Description	Qty	Un	From SN	To SN	Order PN	Page
1	85408060	ENGINE WIRING LOOM JD6068	1	UN			85408060	23
2	85638971	TELYS 010 WIRING LOOM ASSEMBLY JD 6081	1	UN			85638971	25
3	85635712	ELECTRIC SHAFT ASSEMBLY	1	UN			85635712	31

ENGINE WIRING LOOM JD6068

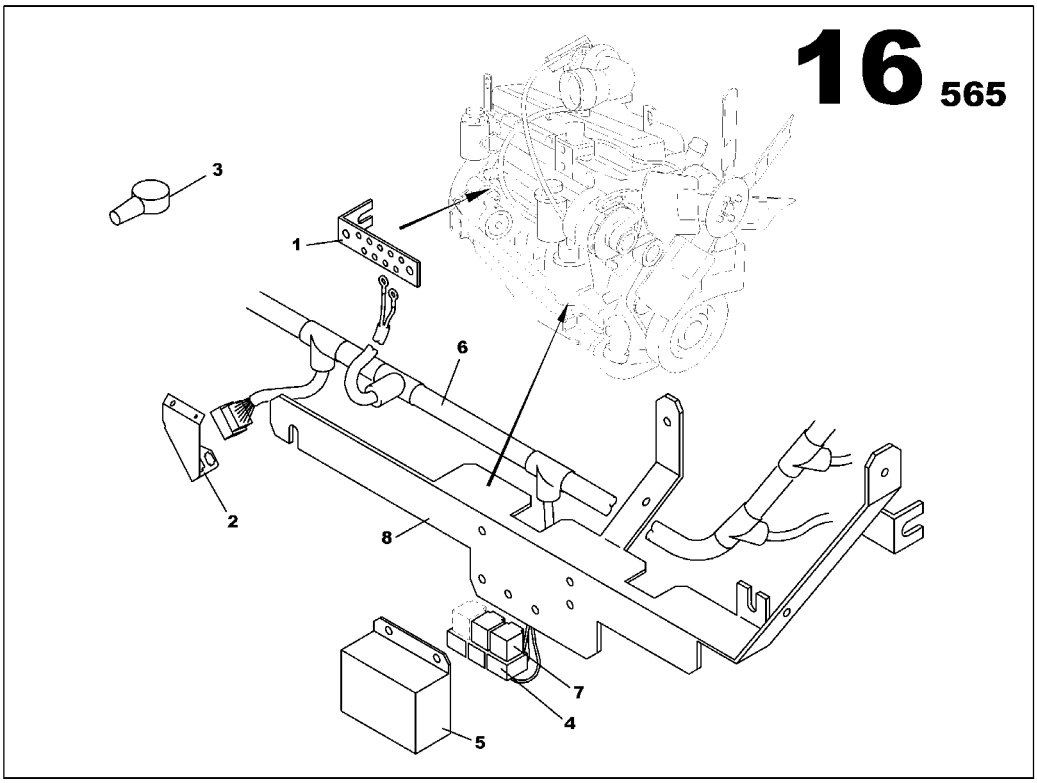

ENGINE WIRING LOOM JD6068
85408060

Part numbers listed are only parts used in this model

Item	Part No.	Description	Qty	Un	From SN	To SN	Order PN	Page
1	85408078	COPPER BAR 5x25	1	UN			85408078	
2	85509164	CONNECTOR BRACKET	1	UN			85509164	
3	85623833	COWL	1	UN			85623833	
4	85506608	AUTOMOBILE RELAY BASE	3	UN			85506608	
5	85407971	STARTING RELAY PROTECTION PANEL	1	UN			85407971	
6	85408045	ENGINE WIRING LOOM JD 6068	1	UN			85408045	
7	85408896	RELAY 12V 20/30A	2	UN			85408896	
8	85407963	WIRING BRACKET JD 6068	1	UN			85407963	

TELYS 010 WIRING LOOM ASSEMBLY JD 6081

Non illustré
Not illustrated

TELYS 010 WIRING LOOM ASSEMBLY JD 6081
85638971

Part numbers listed are only parts used in this model

Item	Part No.	Description	Qty	Un	From SN	To SN	Order PN	Page
1	85638690	TELYS WIRING LOOM 010-BAT	1	UN			85638690	
2	85635217	TELYS WIRING LOOM 010	1	UN	0	032004982	85635217	
3	85635704	TELYS 010 WIRING LOOM ASSEMBLY JD 6081	1	UN	032004983		85635704	29
4	85635365	ELECTRICAL SHAFT	1	UN	0	032004982	85635365	27

ELECTRICAL SHAFT

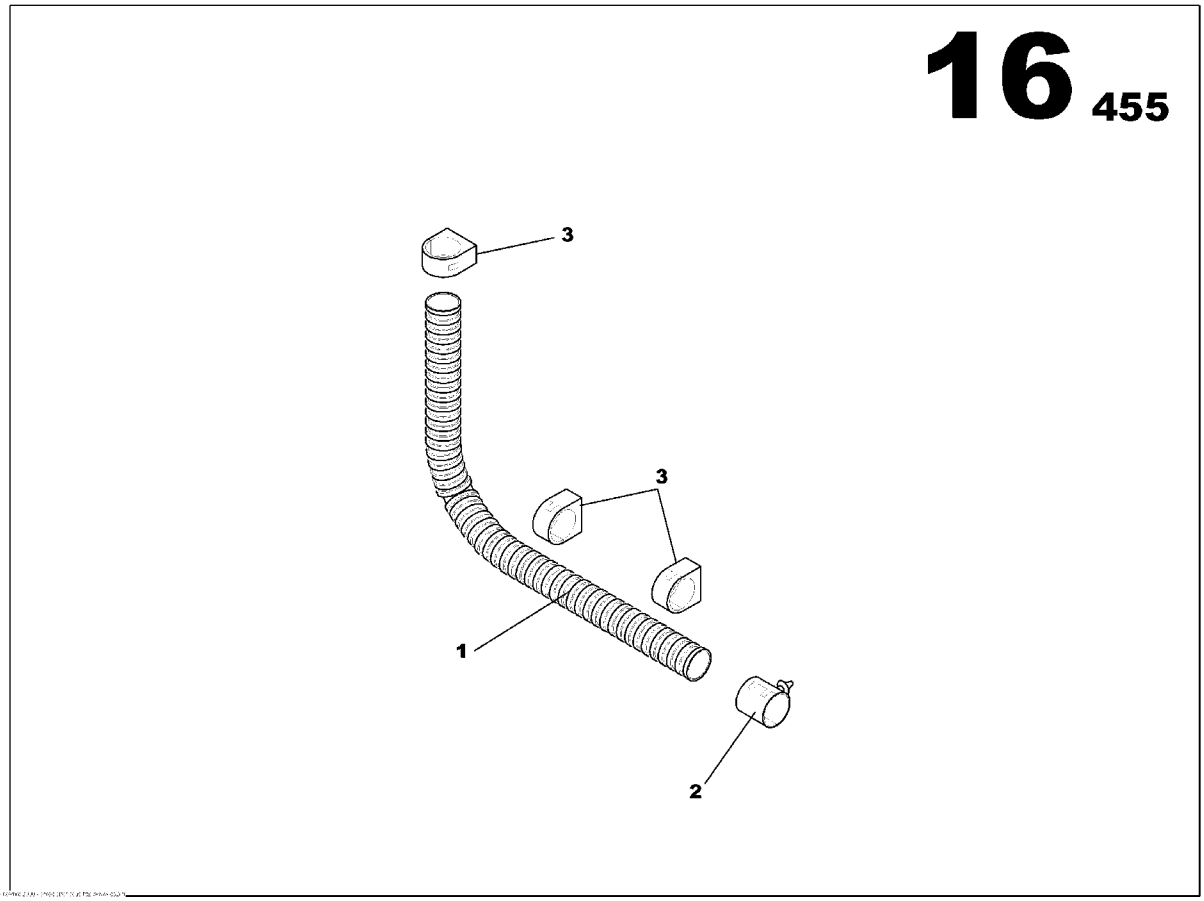

ELECTRICAL SHAFT
85635365

Part numbers listed are only parts used in this model

Item	Part No.	Description	Qty	Un	From SN	To SN	Order PN	Page
1	85427268	ELECTRICAL SHAFT D29	1.7	ML			85427268	
2	85427276	CLIP D29	1	UN			85427276	
3	85427029	CLIP D29	3	UN			85427029	

TELYS 010 WIRING LOOM ASSEMBLY JD 6081

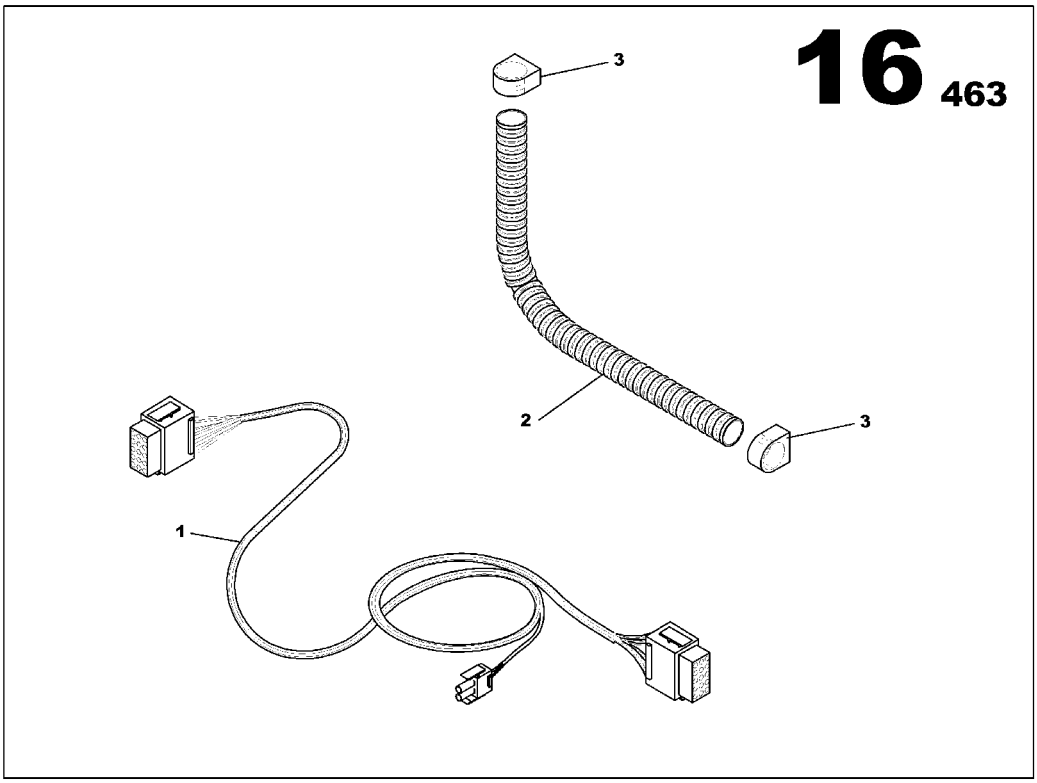

TELYS 010 WIRING LOOM ASSEMBLY JD 6081
85635704

Part numbers listed are only parts used in this model

Item	Part No.	Description	Qty	Un	From SN	To SN	Order PN	Page
1	85635217	TELYS WIRING LOOM 010	1	UN			85635217	
2	85427268	ELECTRICAL SHAFT D29	1.7	ML			85427268	
3	85427276	CLIP D29	2	UN			85427276	

ELECTRIC SHAFT ASSEMBLY

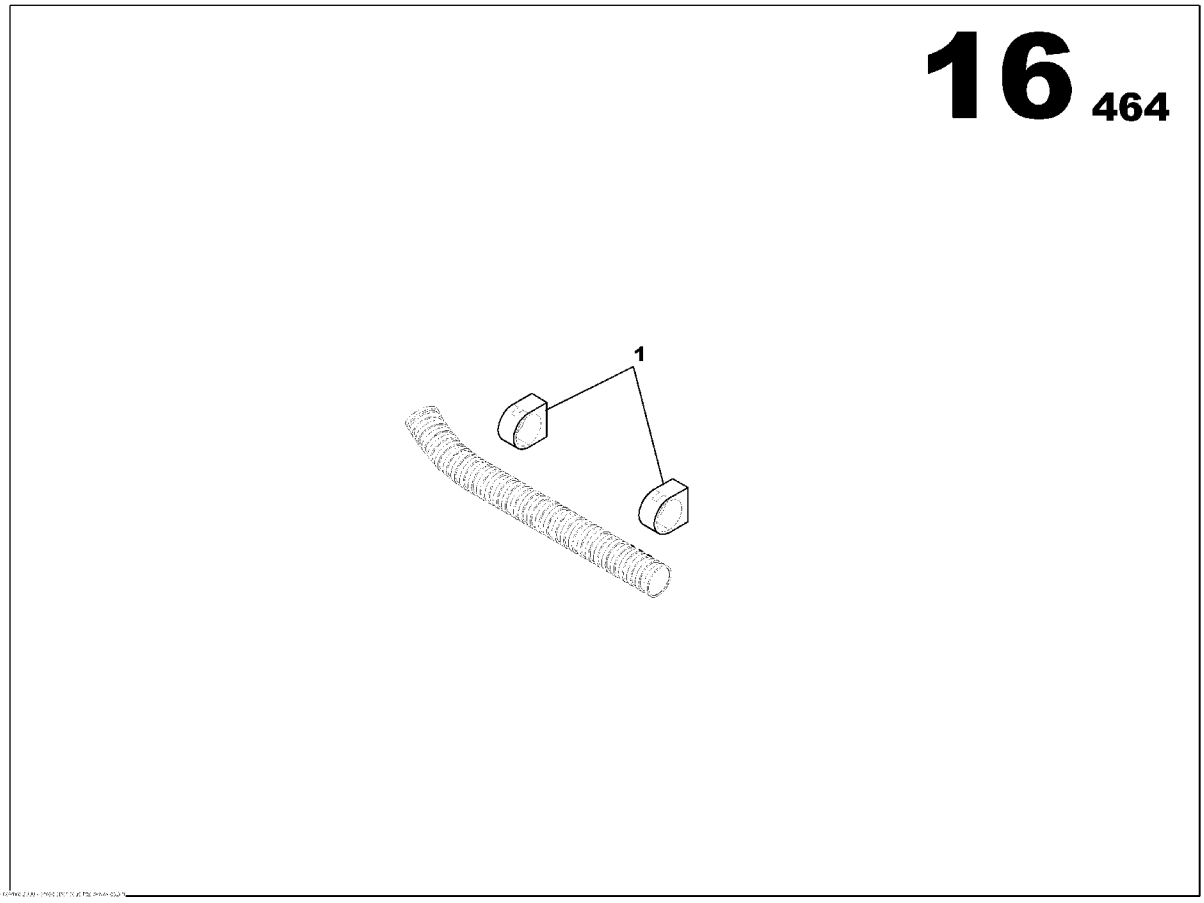

ELECTRIC SHAFT ASSEMBLY
85635712

Part numbers listed are only parts used in this model

Item	Part No.	Description	Qty	Un	From SN	To SN	Order PN	Page
1	85427029	CLIP D29	2	UN			85427029	

ALTERNATOR FUNCTION

Non illustré
Not illustrated

ALTERNATOR FUNCTION

Part numbers listed are only parts used in this model

Item	Part No.	Description	Qty	Un	From SN	To SN	Order PN	Page
1	85635076	OUTPUT CABLES ALTERNATOR ASSEMBLY	1	UN			85635076	35
2		ALTERNATOR	1	UN				37

OUTPUT CABLES ALTERNATOR ASSEMBLY

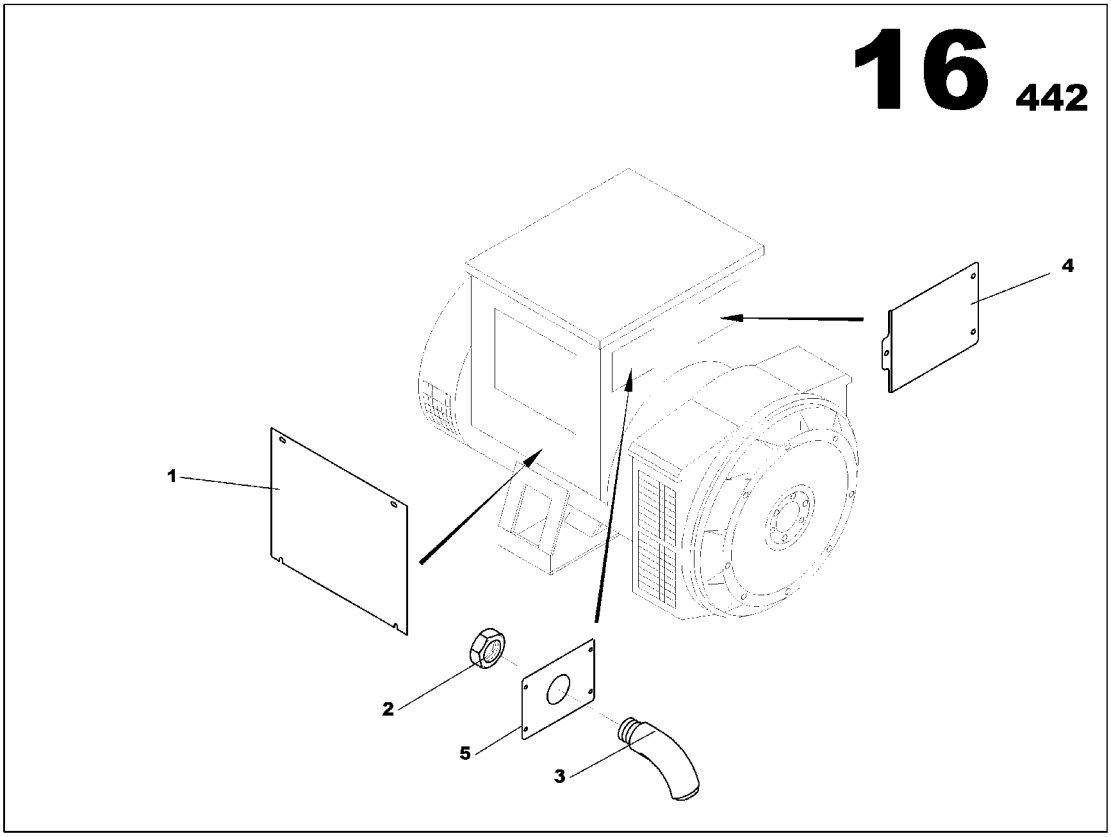

OUTPUT CABLES ALTERNATOR ASSEMBLY
85635076

Part numbers listed are only parts used in this model

Item	Part No.	Description	Qty	Un	From SN	To SN	Order PN	Page
1	85501435	CABLE OUTLET PLATE	1	UN			85501435	
2	85635803	GLAND NUT SCREW PG48	1	UN			85635803	
3	85635852	PIPE UNION ELBOW 45° PG48	1	UN			85635852	
4	85635084	REGULATION ACCES PLATE LSA442	1	UN	03005023		85635084	
5	85635092	CABLE OUTLET PLATE	1	UN	03005023		85635092	

ALTERNATOR

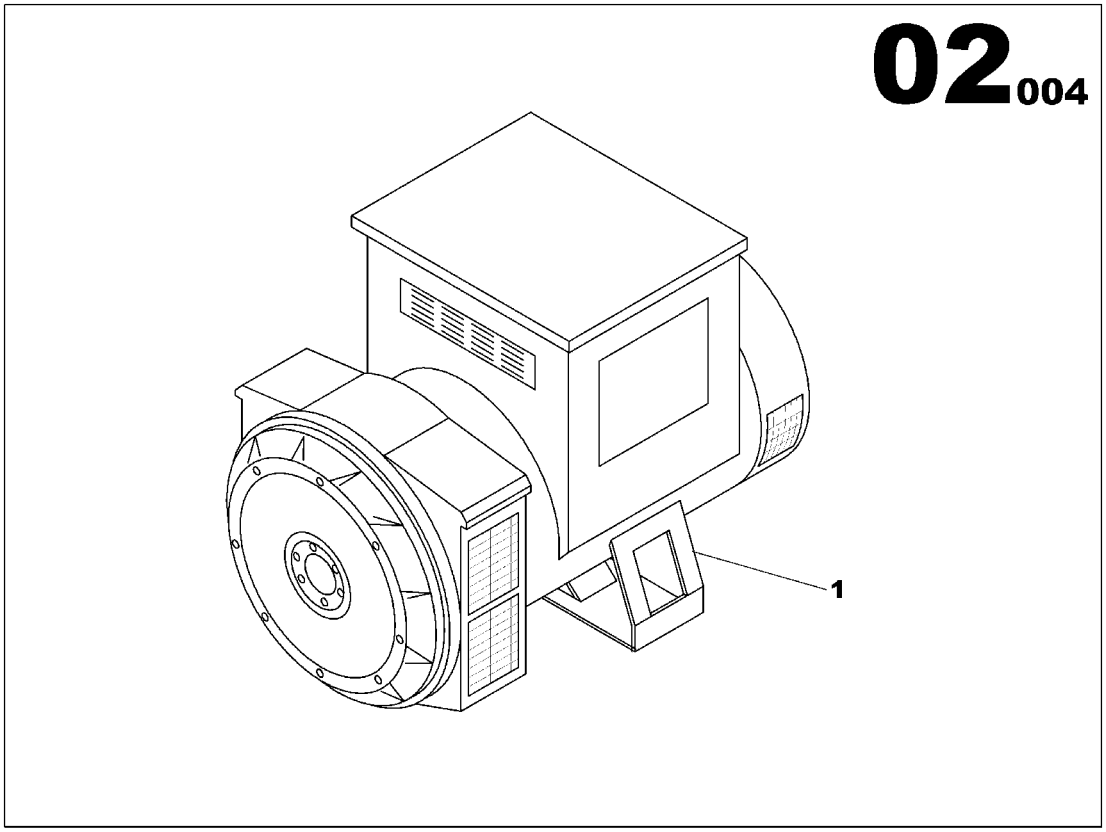

ALTERNATOR

Part numbers listed are only parts used in this model

Item	Part No.	Description	Qty	Un	From SN	To SN	Order PN	Page
1	85410181	ALTERNATOR LS 442L	1	UN			85410181	39

ALTERNATOR LS 442L

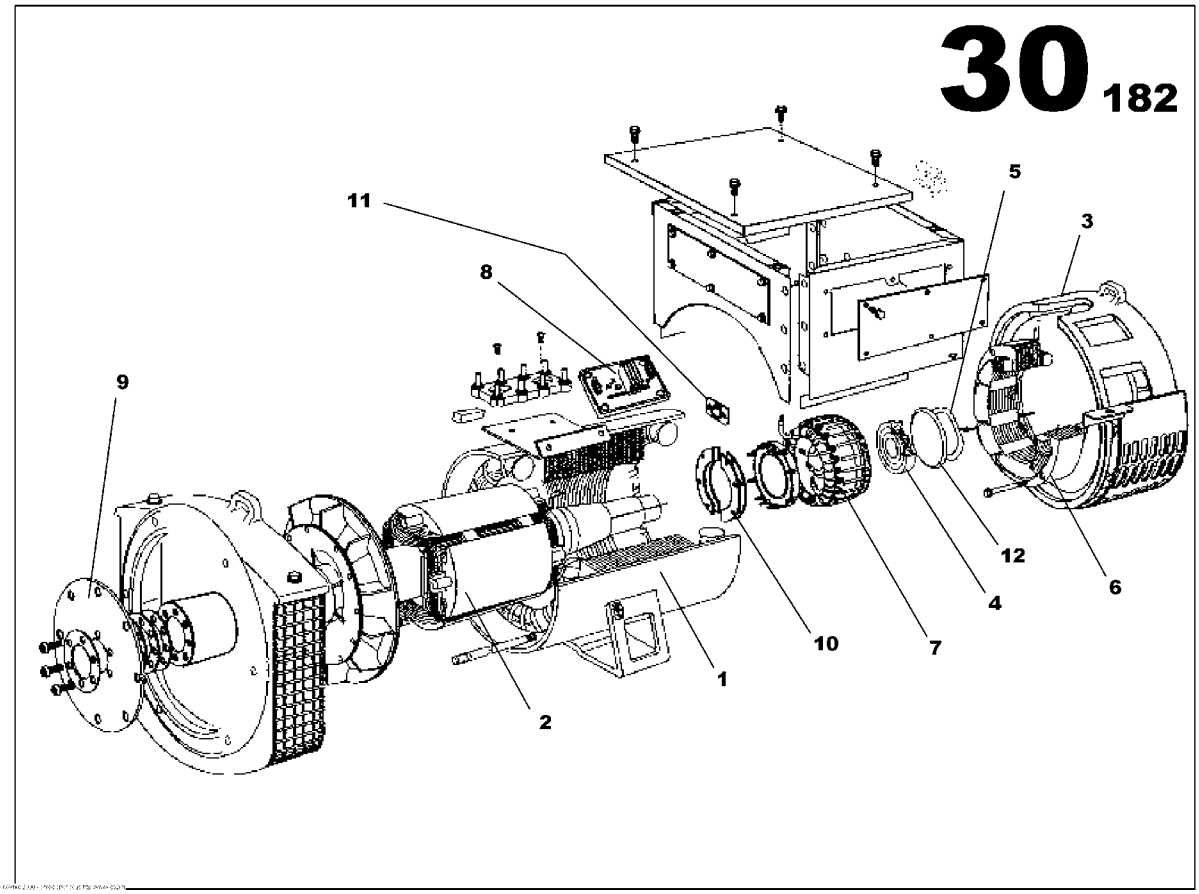

ALTERNATOR LS 442L
85410181

Part numbers listed are only parts used in this model

Item	Part No.	Description	Qty	Un	From SN	To SN	Order PN	Page
1	85508794	WOUND STATOR ASSEMBLY	1	UN			85508794	
2	85509107	WOUND ROTOR ASSEMBLY	1	UN			85509107	
3	85508869	N.D.E BRACKET	1	UN			85508869	
4	85425908	BALL BEARING	1	UN			85425908	
5	85509057	WAVY WASHER	1	UN			85509057	
6	85508901	WOUND EXCITER FIELD	1	UN			85508901	
7	85508950	WOUND EXCITER ARMATURE	1	UN			85508950	
8	85402451	GOVERNOR	1	UN			85402451	
9	85425932	COUPLING DISC LSA 442	1	UN			85425932	
10	85425593	DIOD BRIDGE ASSEMBLY	1	UN			85425593	
11	85425585	SURGE SUPPRESSOR	1	UN			85425585	
12	85509008	O RING	1	UN			85509008	

COOLER FUNCTION

Non illustré
Not illustrated

COOLER FUNCTION

Part numbers listed are only parts used in this model

Item	Part No.	Description	Qty	Un	From SN	To SN	Order PN	Page
1	85637155	RADIATOR FITTINGS ASSEMBLY	1	UN			85637155	43

RADIATOR FITTINGS ASSEMBLY

Non illustré
Not illustrated

RADIATOR FITTINGS ASSEMBLY
85637155

Part numbers listed are only parts used in this model

Item	Part No.	Description	Qty	Un	From SN	To SN	Order PN	Page
1	85637205	RADIATOR FITTINGS JD6068H ASSEMBLY	1	UN	04000061		85637205	45

RADIATOR FITTINGS JD6068H ASSEMBLY

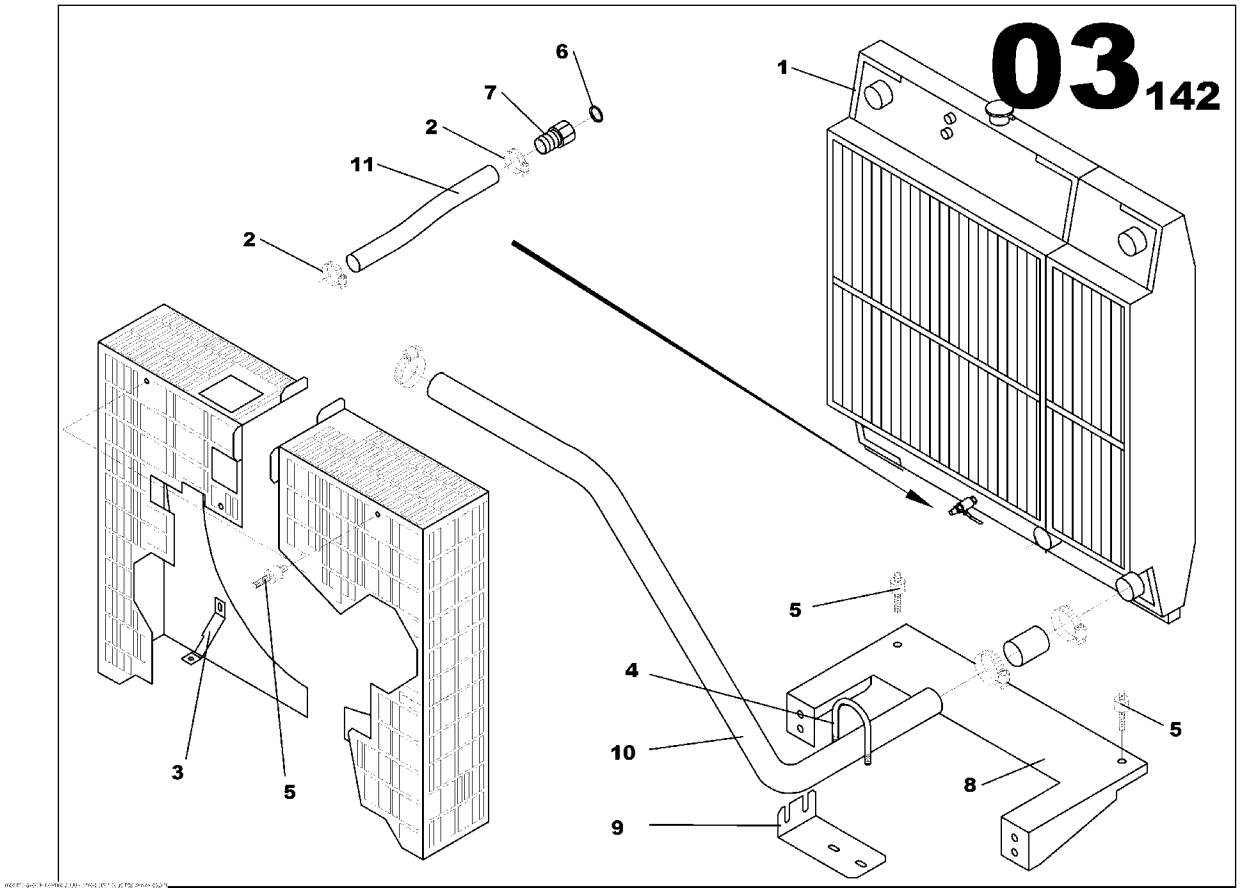

RADIATOR FITTINGS JD6068H ASSEMBLY
85637205

Part numbers listed are only parts used in this model

Item	Part No.	Description	Qty	Un	From SN	To SN	Order PN	Page
1	85637163	RADIATOR JD 6068H ASSEMBLY	1	UN			85637163	47
2	85409423	HOSE CLIP D20/32	2	UN			85409423	
3	85403251	RADIATOR BRACKET ENGINE JD 6068	2	UN			85403251	
4	85409456	HOSE CLAMP D60	1	UN			85409456	
5	85405017	ANTI-VIBRATION MOUNT D40 Th28	4	UN			85405017	
6	85623841	GASKET D6x10	1	UN			85623841	
7	85427110	PIPE UNION FEMAL/MAL 1/4G	1	UN			85427110	
8	85637114	RADIATOR BRACKET JD 6CYL	1	UN			85637114	
9	85637577	AIR HOSE BRACKET JD 4045	1	UN			85637577	
10	85637585	AIR INLET PIPE JD 6068H	1	UN			85637585	
11	85416444	FLEXIBLE HOSE D12x19	0.6	ML			85416444	

RADIATOR JD 6068H ASSEMBLY

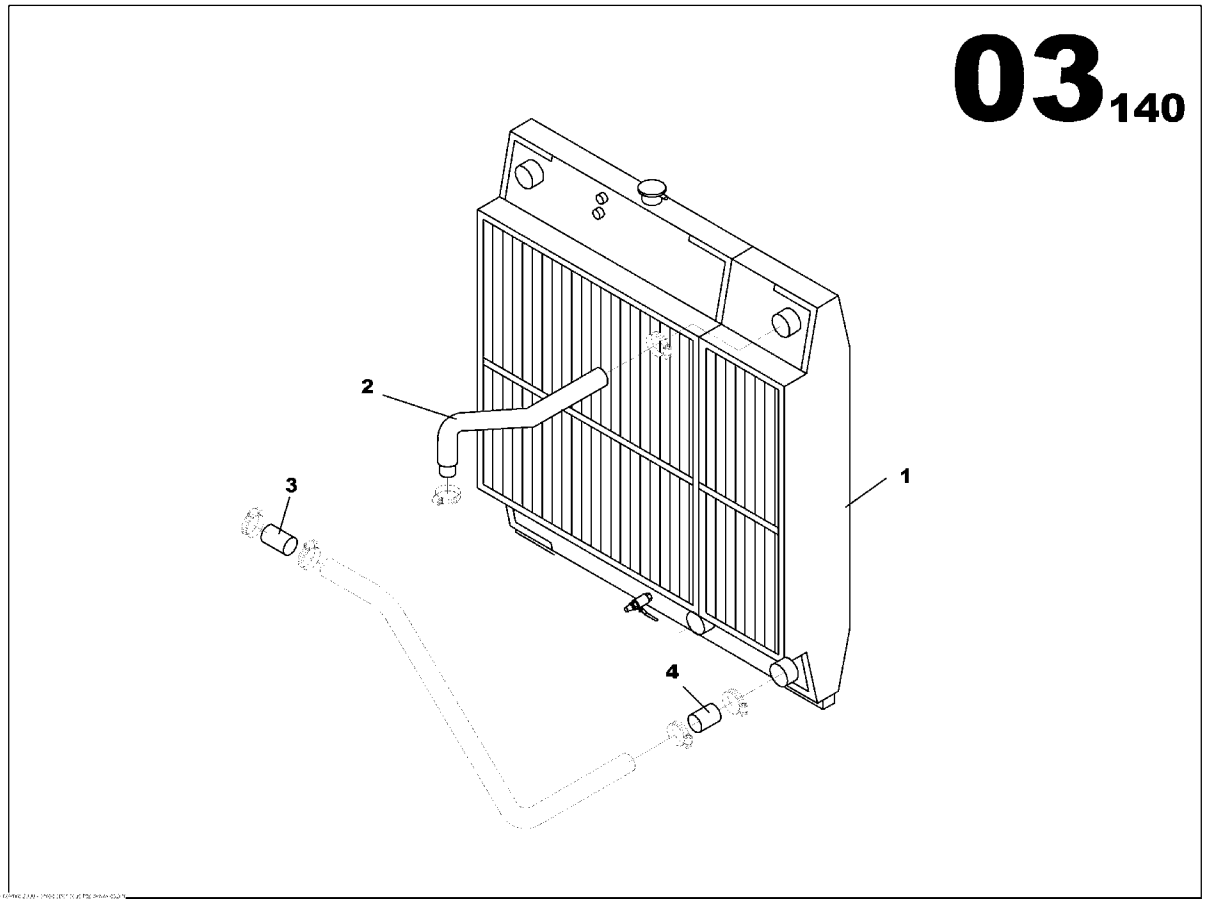

RADIATOR JD 6068H ASSEMBLY
85637163

Part numbers listed are only parts used in this model

Item	Part No.	Description	Qty	Un	From SN	To SN	Order PN	Page
1	85637171	RADIATOR JD 6068H WITH HOSE KIT	1	UN			85637171	49
2	17133372	RUBBER HOSE ELBOW D50	1	UN	04000296		17133372	
3	85639474	RUBBER HOSE D50 LG 150	1	UN			85639474	
4	85639482	RUBBER HOSE D60 LG 150	1	UN			85639482	

RADIATOR JD 6068H WITH HOSE KIT

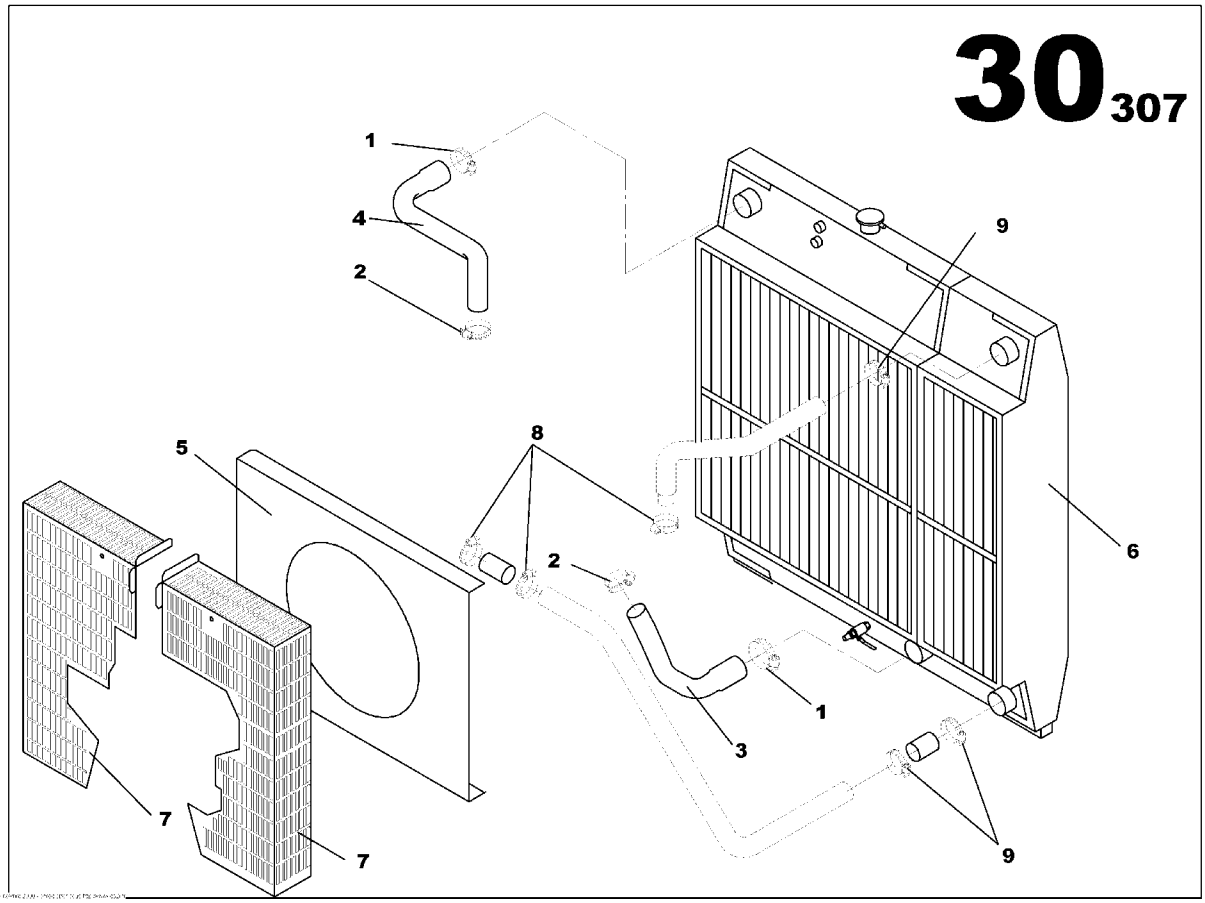

RADIATOR JD 6068H WITH HOSE KIT
85637171

Part numbers listed are only parts used in this model

Item	Part No.	Description	Qty	Un	From SN	To SN	Order PN	Page
1	85409399	HOSE CLIP D60/80	2	UN			85409399	
2	85412922	HOSE CLIP D50/70	2	UN			85412922	
3	85426013	DURIT RADIA INF	1	UN			85426013	
4	85426047	DURIT RADIA SUP	1	UN			85426047	
5	17133562	PLENUM	1	UN			17133562	
6	17133612	RADIATOR JD 6068H ASSEMBLY	1	UN			17133612	51
7	17133471	GRIDS SET	1	UN			17133471	
8	85426385	T BOLT CLAMP	3	UN			85426385	
9	85509750	T BOLT CLAMP D68/73	3	UN			85509750	

RADIATOR JD 6068H ASSEMBLY

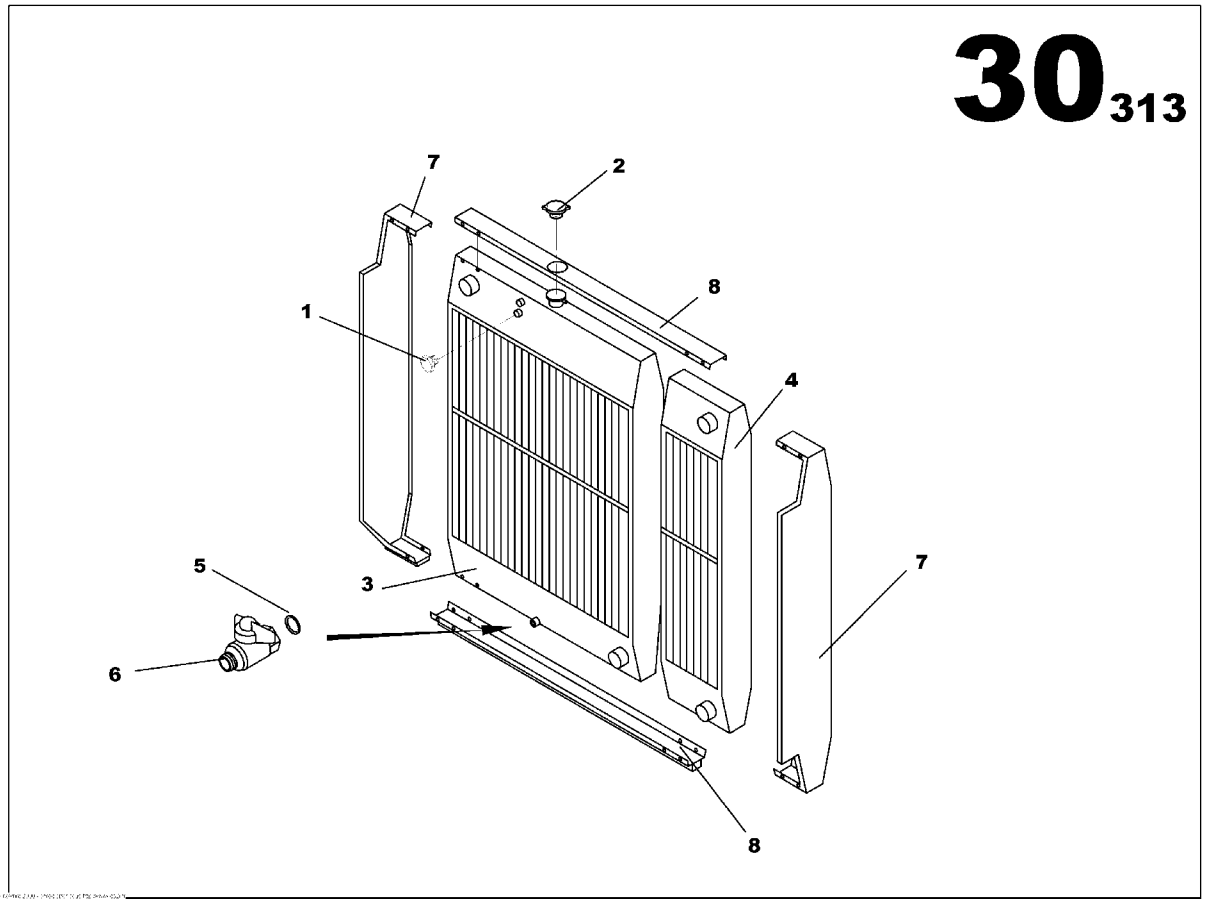

RADIATOR JD 6068H ASSEMBLY
17133612

Part numbers listed are only parts used in this model

Item	Part No.	Description	Qty	Un	From SN	To SN	Order PN	Page
1	85409316	PLUG 1/2G	1	UN			85409316	
2	85500536	RADIATOR CAP	1	UN			85500536	
3	17133570	WATER RADIATOR	1	UN			17133570	
4	17133620	AIR RADIATOR	1	UN			17133620	
5	85410298	GASKET D14x18	1	UN			85410298	
6	85639896	2 WAY VALVE	1	UN			85639896	
7	17133521	UPRIGHTS SET	1	UN			17133521	
8	17133554	TRAVERSES SET	1	UN			17133554	

FUEL FUNCTION

Non illustré
Not illustrated

FUEL FUNCTION

Part numbers listed are only parts used in this model

Item	Part No.	Description	Qty	Un	From SN	To SN	Order PN	Page
1	85637304	FUEL PREFILTER KIT ASSEMBLY	1	UN			85637304	55
2	17131475	FUEL TANK ASSEMBLY	1	UN			17131475	61

FUEL PREFILTER KIT ASSEMBLY

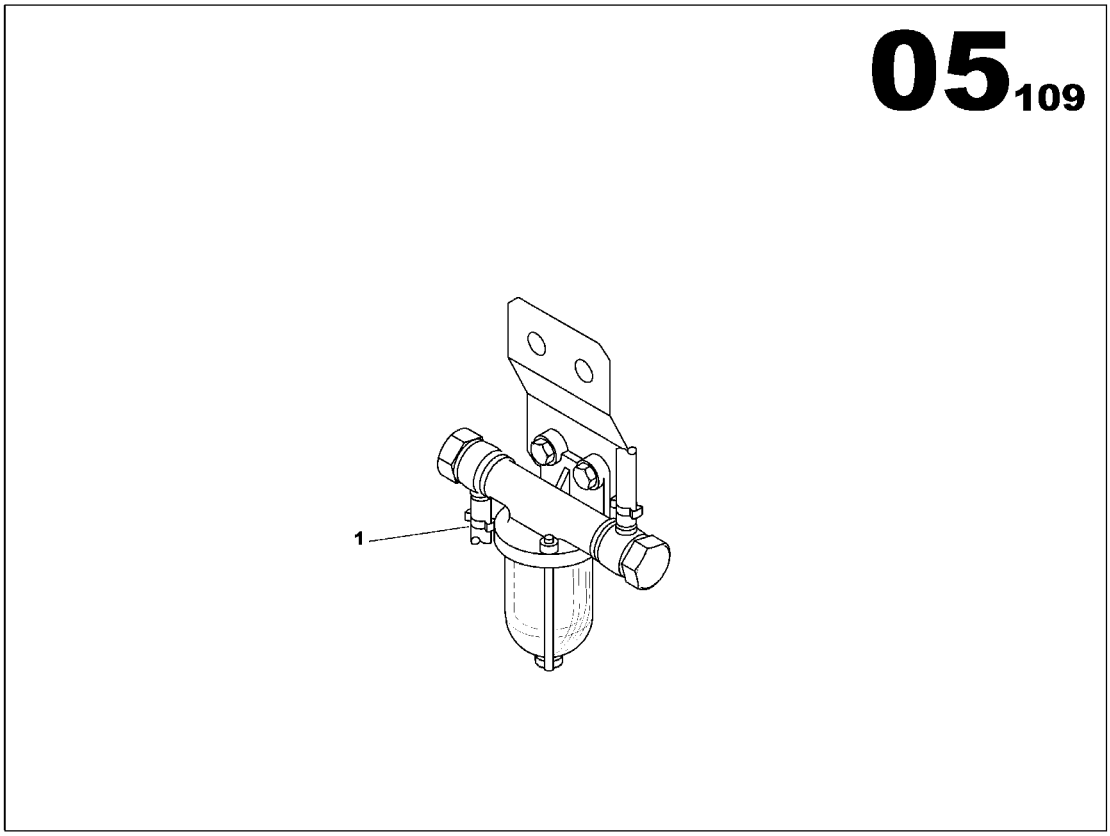

FUEL PREFILTER KIT ASSEMBLY
85637304

Part numbers listed are only parts used in this model

Item	Part No.	Description	Qty	Un	From SN	To SN	Order PN	Page
1	85403558	FUEL PREFILTER KIT ASSEMBLY	1	UN			85403558	57

FUEL PREFILTER KIT ASSEMBLY

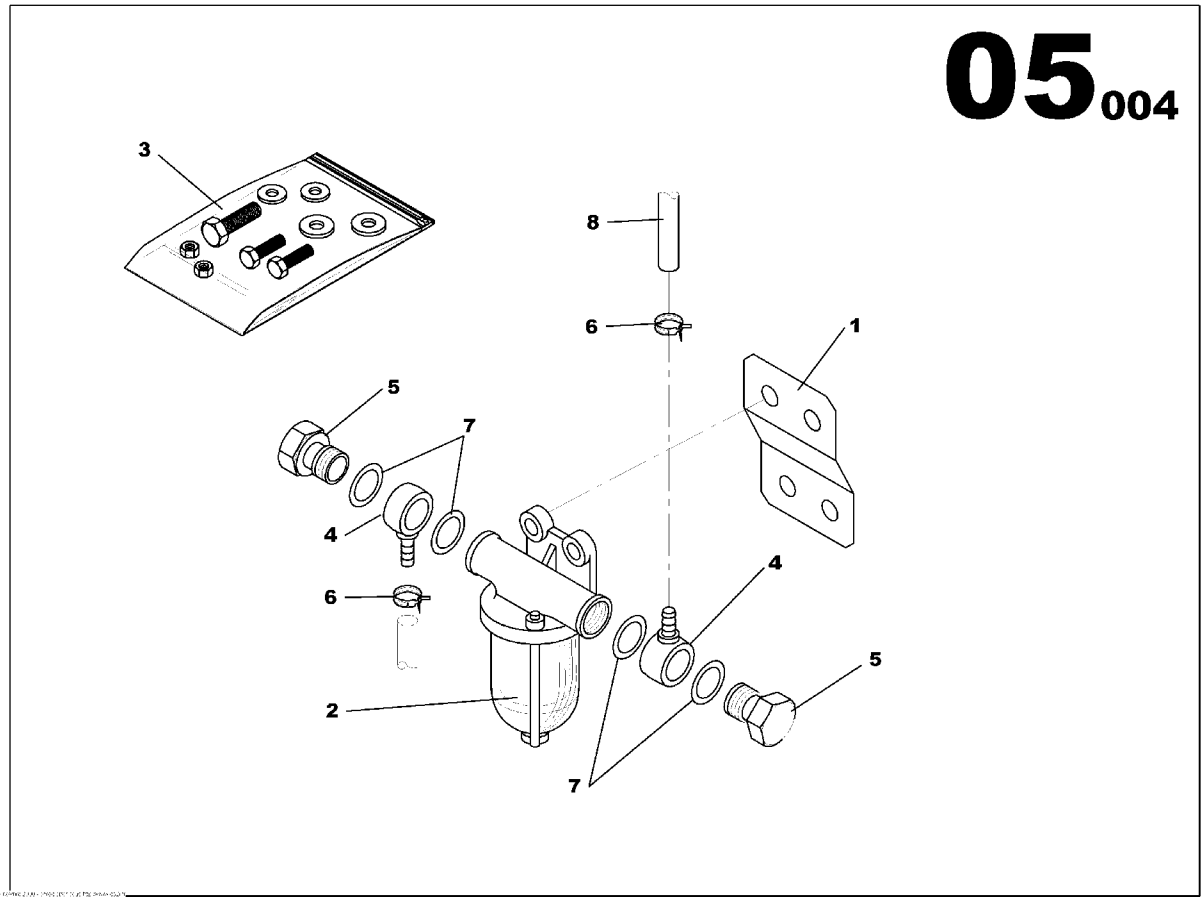

FUEL PREFILTER KIT ASSEMBLY
85403558

Part numbers listed are only parts used in this model

Item	Part No.	Description	Qty	Un	From SN	To SN	Order PN	Page
1	85403483	FUEL FILTER BRACKET	1	UN			85403483	
2	85403525	FUEL FILTER SEPARATOR	1	UN			85403525	
3	85636397	SCREWS ASSEMBLY	1	UN			85636397	59
4	85409274	BANJO CONNECTOR MALE D08	2	UN			85409274	
5	85409282	BANJO SCREW M14X150 L26	2	UN			85409282	
6	85409514	SPRING CLAMP D13/15	4	UN			85409514	
7	85409522	GASKET D14x20	4	UN			85409522	
8	85416436	FLEXIBLE HOSE D8x14	2.8	ML	02004193		85416436	

SCREWS ASSEMBLY

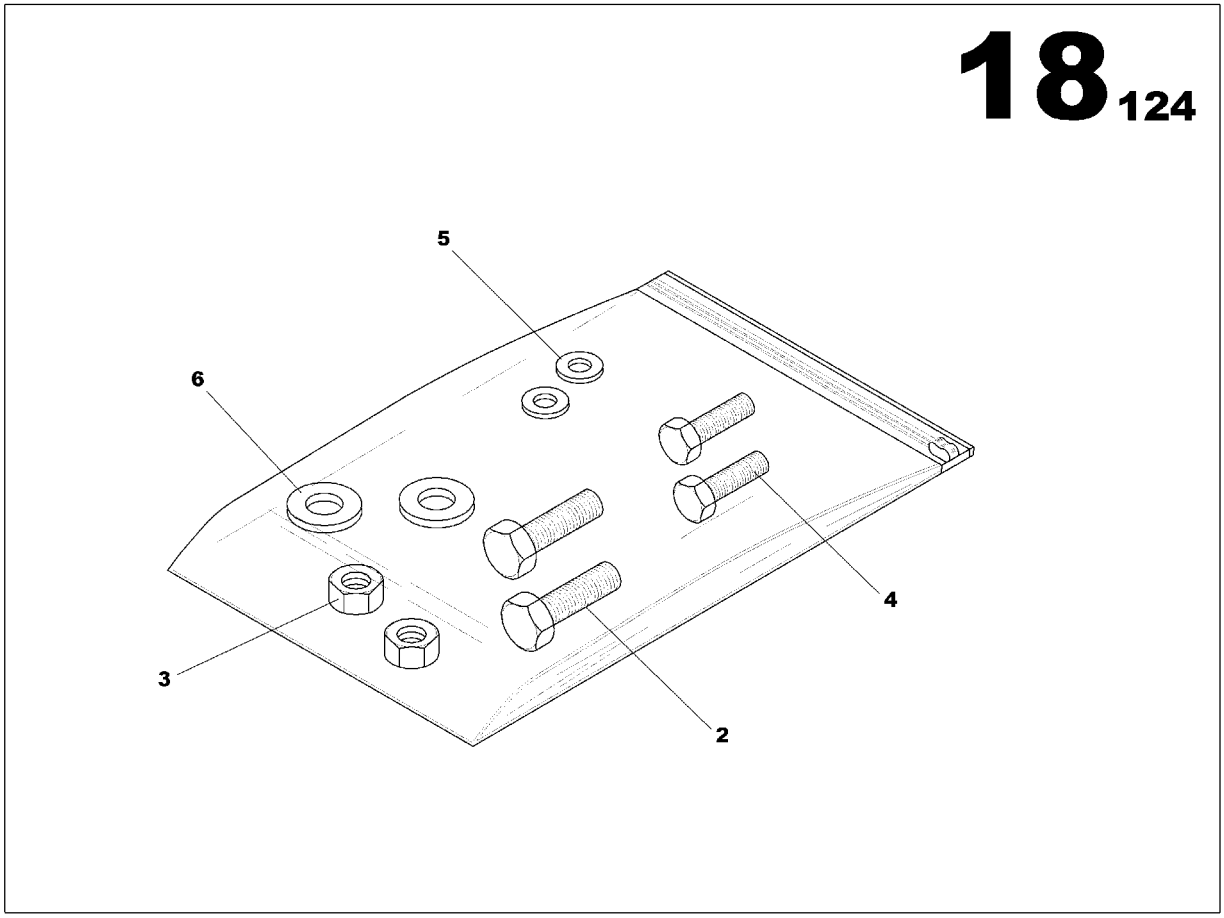

SCREWS ASSEMBLY
85636397

Part numbers listed are only parts used in this model

Item	Part No.	Description	Qty	Un	From SN	To SN	Order PN	Page
2	85509735	SCREW H M12x20	2	UN			85509735	
3	85509743	NUT M8	2	UN			85509743	
4	85636371	SCREW H M8x20	2	UN			85636371	
5	85430213	WASHER 8x18	2	UN			85430213	
6	85430171	WASHER 12X27	2	UN			85430171	

FUEL TANK ASSEMBLY

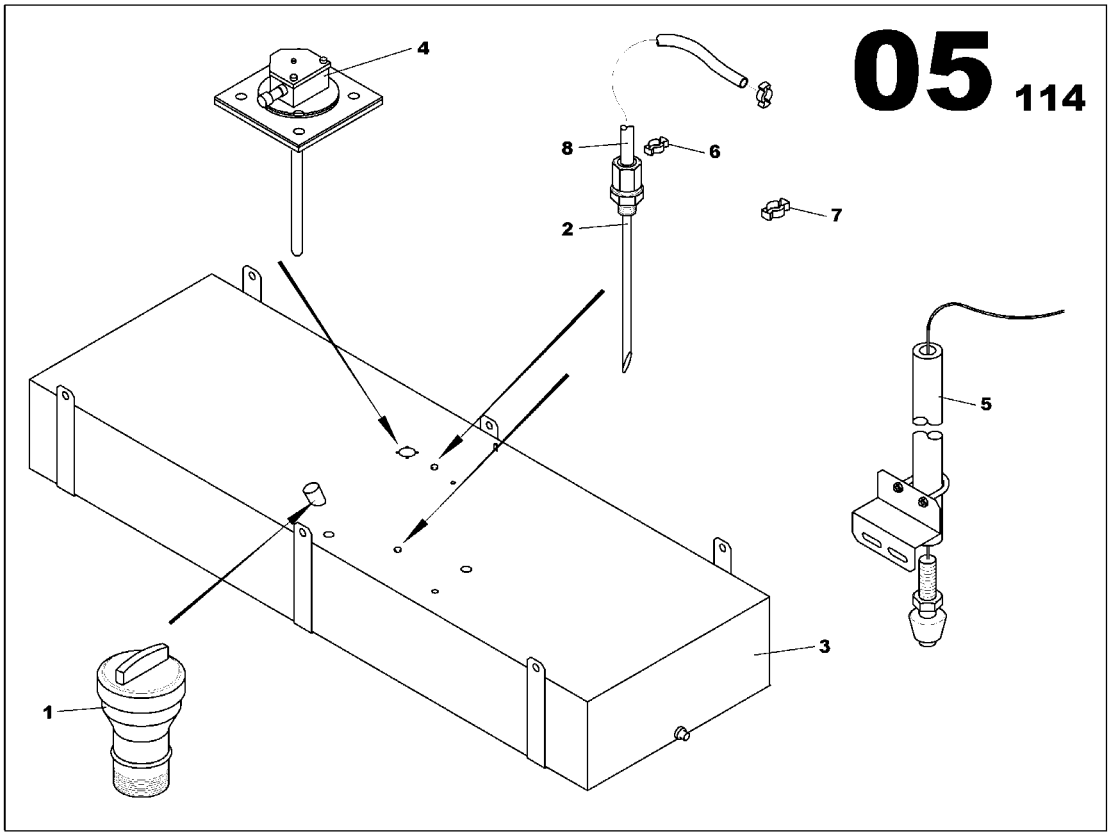

FUEL TANK ASSEMBLY
17131475

Part numbers listed are only parts used in this model

Item	Part No.	Description	Qty	Un	From SN	To SN	Order PN	Page
1	85629541	FUEL FILLING FUNNEL BASE TANK	1	UN			85629541	63
2	17131335	FUEL SUCCION PIPE L470 D8 3/8G	2	UN			17131335	
3	17131418	TANK 868L	1	UN			17131418	
4	85404580	TRANS. FUEL LEVEL ASSEMBLY	1	UN			85404580	65
5	17131673	LEAKAGE DETECTION RETENTION BUND ASSEMBLY	1	UN			17131673	67
6	85409514	SPRING CLAMP D13/15	2	UN			85409514	
7	85509727	SPRING CLAMP D17/19	2	UN			85509727	
8	85416436	FLEXIBLE HOSE D8x14	1	ML			85416436	

FUEL FILLING FUNNEL BASE TANK

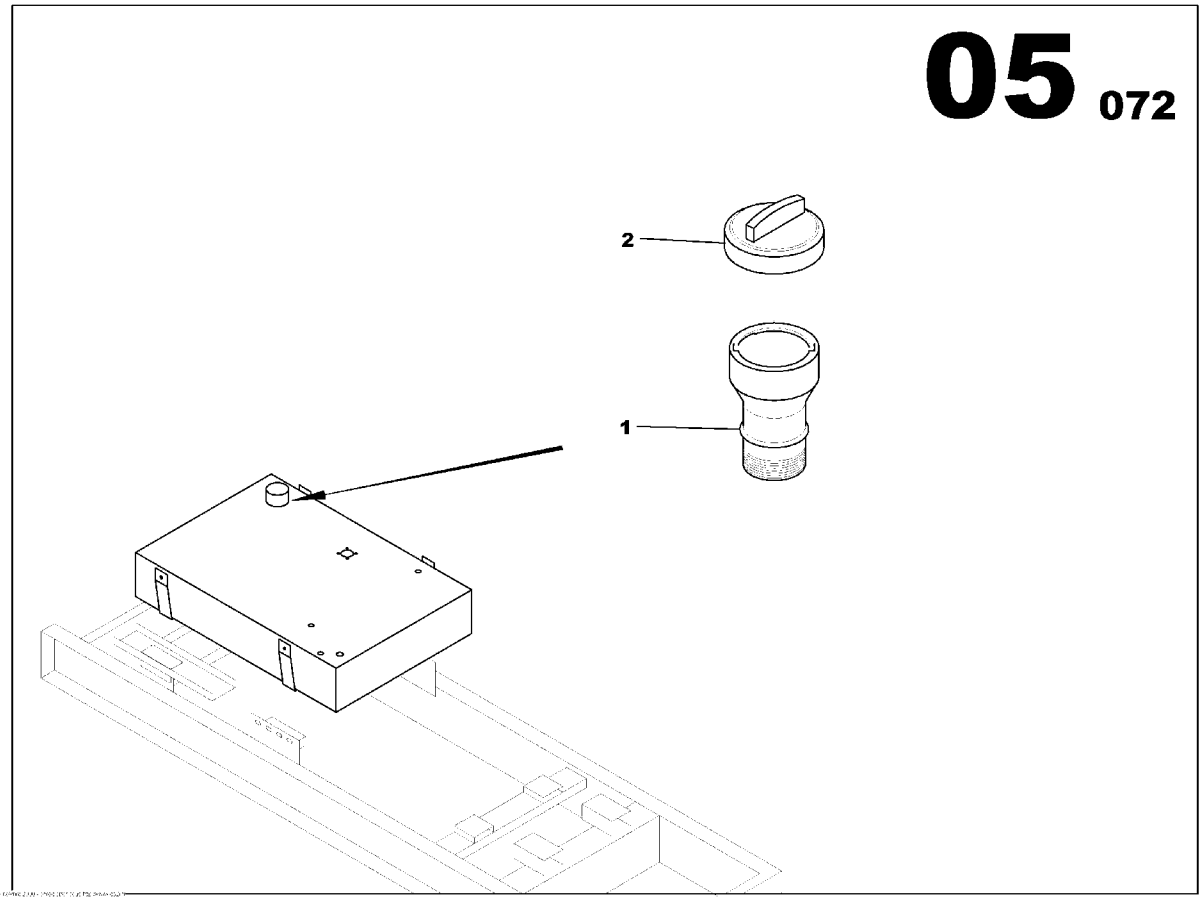

FUEL FILLING FUNNEL BASE TANK
85629541

Part numbers listed are only parts used in this model

Item	Part No.	Description	Qty	Un	From SN	To SN	Order PN	Page
1	85403517	FUEL FILLING FUNNEL BASE TANK	1	UN			85403517	
2	85509222	TANK CAP	1	UN			85509222	

TRANS. FUEL LEVEL ASSEMBLY

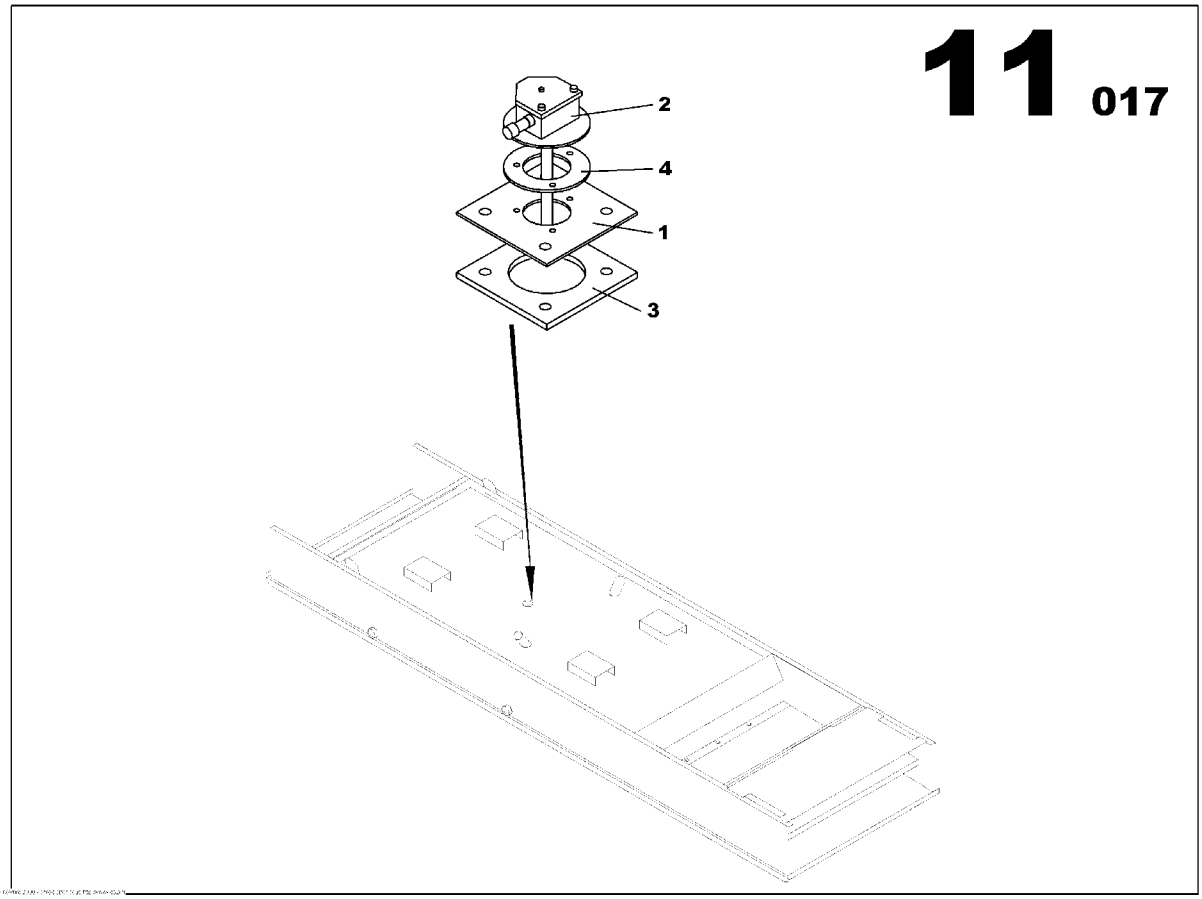

TRANS. FUEL LEVEL ASSEMBLY
85404580

Part numbers listed are only parts used in this model

Item	Part No.	Description	Qty	Un	From SN	To SN	Order PN	Page
1	85403509	LEVEL SENSOR ADAPTER	1	UN			85403509	
2	85404572	LEVEL SENSOR	1	UN			85404572	
3	85409068	SQARE FLANGE GASKET	1	UN			85409068	
4	85409076	ROUND FLANGE GASKET	1	UN			85409076	

LEAKAGE DETECTION RETENTION BUND ASSEMBLY

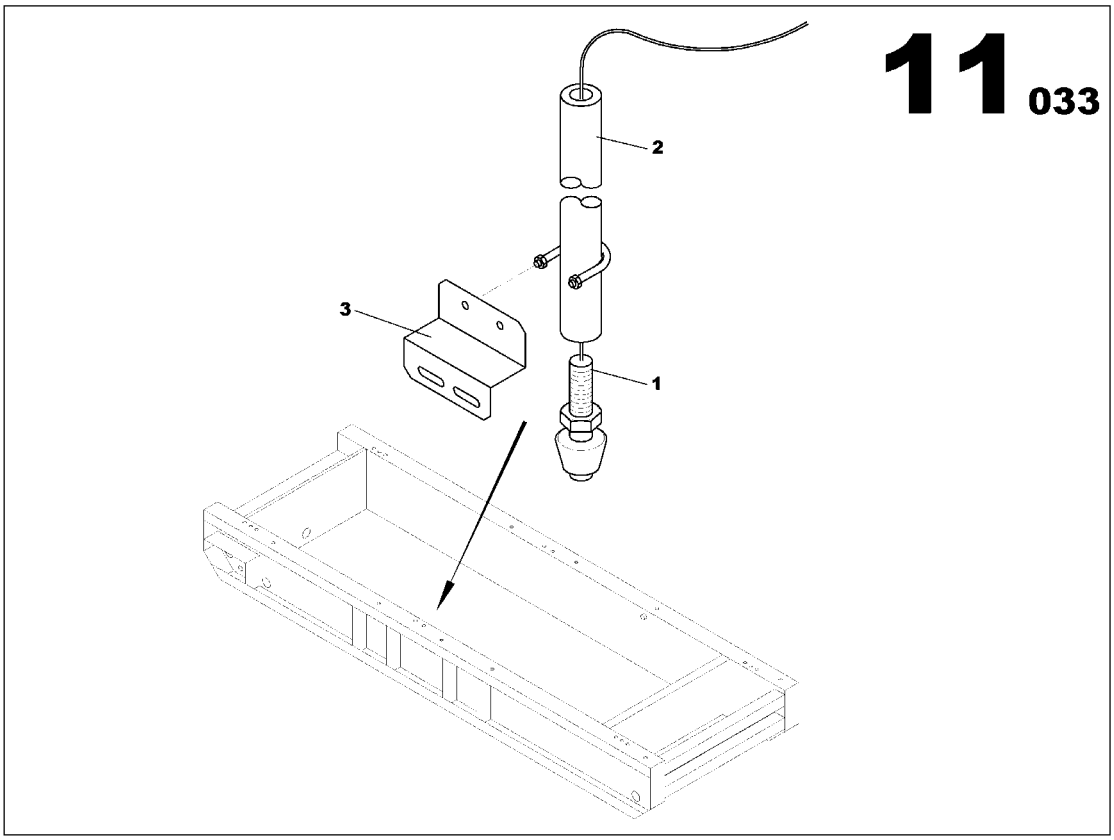

LEAKAGE DETECTION RETENTION BUND ASSEMBLY
17131673

Part numbers listed are only parts used in this model

Item	Part No.	Description	Qty	Un	From SN	To SN	Order PN	Page
1	85417459	LEVEL SWITCH	1	UN			85417459	
2	17132317	DETECTION ESCAPE SWITCH BRACKET	1	UN			17132317	
3	17132325	DETECTION ESCAPE SWITCH BRACKET	1	UN			17132325	

STARTING FUNCTION

Non illustré
Not illustrated

STARTING FUNCTION

Part numbers listed are only parts used in this model

Item	Part No.	Description	Qty	Un	From SN	To SN	Order PN	Page
1	17131608	ELECTRIC STARTER ASSEMBLY	1	UN			17131608	71

ELECTRIC STARTER ASSEMBLY

Non illustré
Not illustrated

ELECTRIC STARTER ASSEMBLY
17131608

Part numbers listed are only parts used in this model

Item	Part No.	Description	Qty	Un	From SN	To SN	Order PN	Page
1	17131590	ELECTRIC STARTER ASSEMBLY	1	UN			17131590	73

ELECTRIC STARTER ASSEMBLY

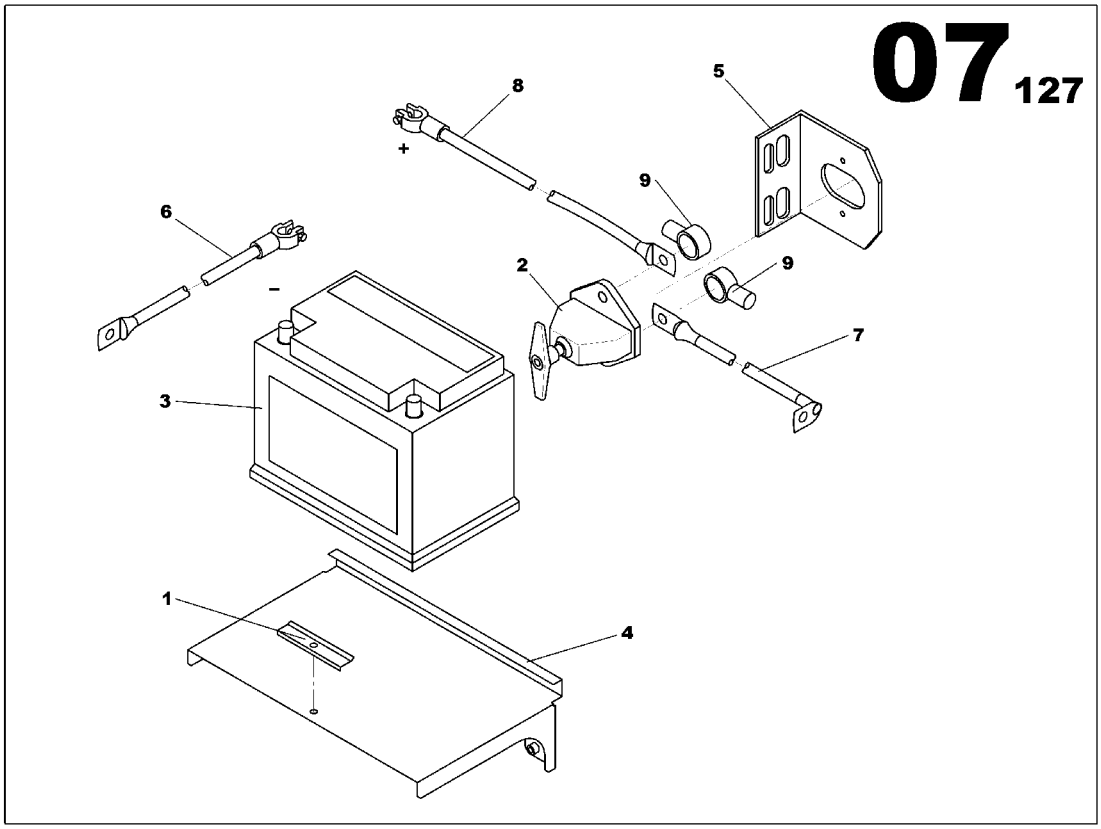

ELECTRIC STARTER ASSEMBLY
17131590

Part numbers listed are only parts used in this model

Item	Part No.	Description	Qty	Un	From SN	To SN	Order PN	Page
1	85403699	BATTERY FIXING BRACKET	1	UN			85403699	
2	85403723	BATTERY ISOLATOR SWITCH	1	UN			85403723	
3	85403731	STARTING BATTERY 12V 100Ah 450A	1	UN			85403731	
4	17131509	BATTERY SUPPORT BRACKET	1	UN			17131509	
5	85637494	BATTERY ISOLATOR BRACKET	1	UN			85637494	
6	85406387	BATTERY CABLE(+) 50mm2 L700 RED	1	UN			85406387	
7	85406395	BATTERY CABLE (-) 50mm2 L700 BLACK	1	UN			85406395	
8	85408136	BATTERY CABLE 50mm2 L0700 RED	1	UN			85408136	
9	85502235	COWL	2	UN			85502235	

EXHAUST FUNCTION

Non illustré
Not illustrated

EXHAUST FUNCTION

Part numbers listed are only parts used in this model

Item	Part No.	Description	Qty	Un	From SN	To SN	Order PN	Page
1	85637619	HOT SPOT GUARDS ASSEMBLY	1	UN			85637619	77
2	85637676	EXHAUST MUFFLER M226 ASSEMBLY	1	UN			85637676	81

HOT SPOT GUARDS ASSEMBLY

Non illustré
Not illustrated

HOT SPOT GUARDS ASSEMBLY
85637619

Part numbers listed are only parts used in this model

Item	Part No.	Description	Qty	Un	From SN	To SN	Order PN	Page
1	85626877	HOT SPOT GUARDS ASSEMBLY	1	UN			85626877	79

HOT SPOT GUARDS ASSEMBLY

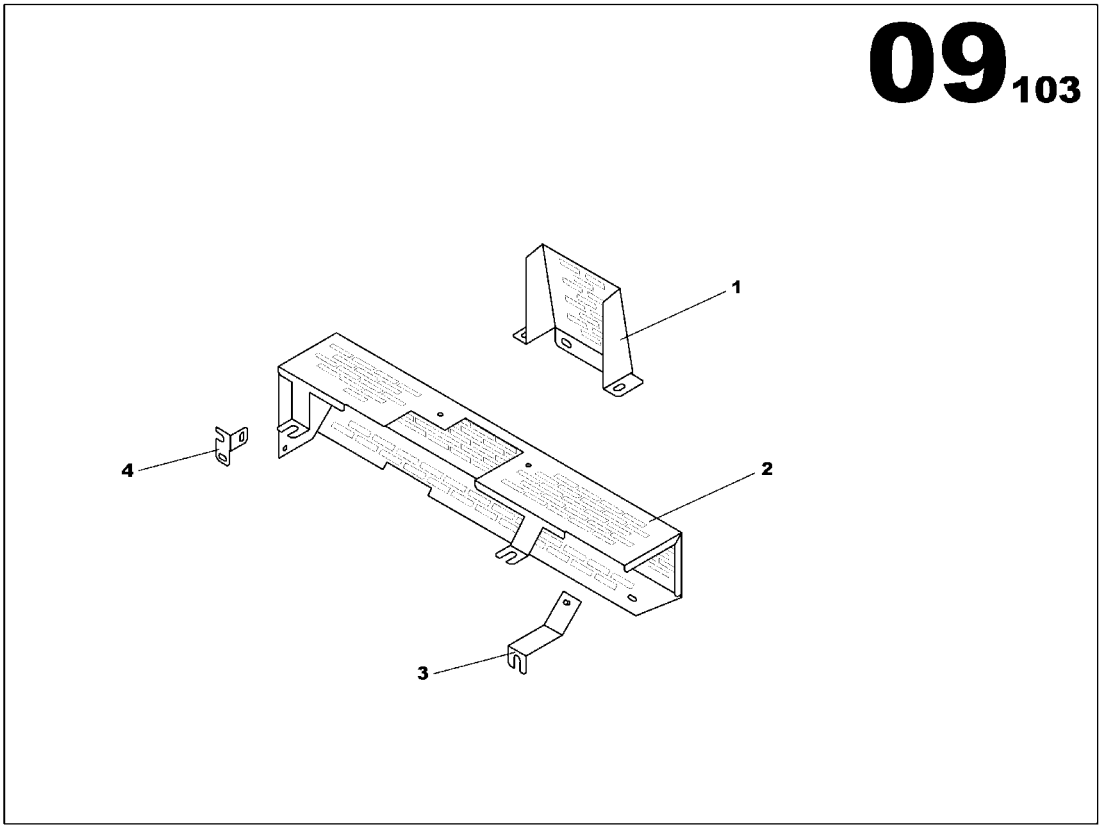

HOT SPOT GUARDS ASSEMBLY
85626877

Part numbers listed are only parts used in this model

Item	Part No.	Description	Qty	Un	From SN	To SN	Order PN	Page
1	85637874	HOT SPOT GUARD	1	UN			85637874	
2	85637882	HOT SPOT GUARD	1	UN			85637882	
3	85634046	HOT SPOT GUARD BRACKET JD 4045/6068 LOWER	1	UN			85634046	
4	85637890	HOT SPOT GUARD BRACKET JD 6068H LOWER	1	UN			85637890	

EXHAUST MUFFLER M226 ASSEMBLY

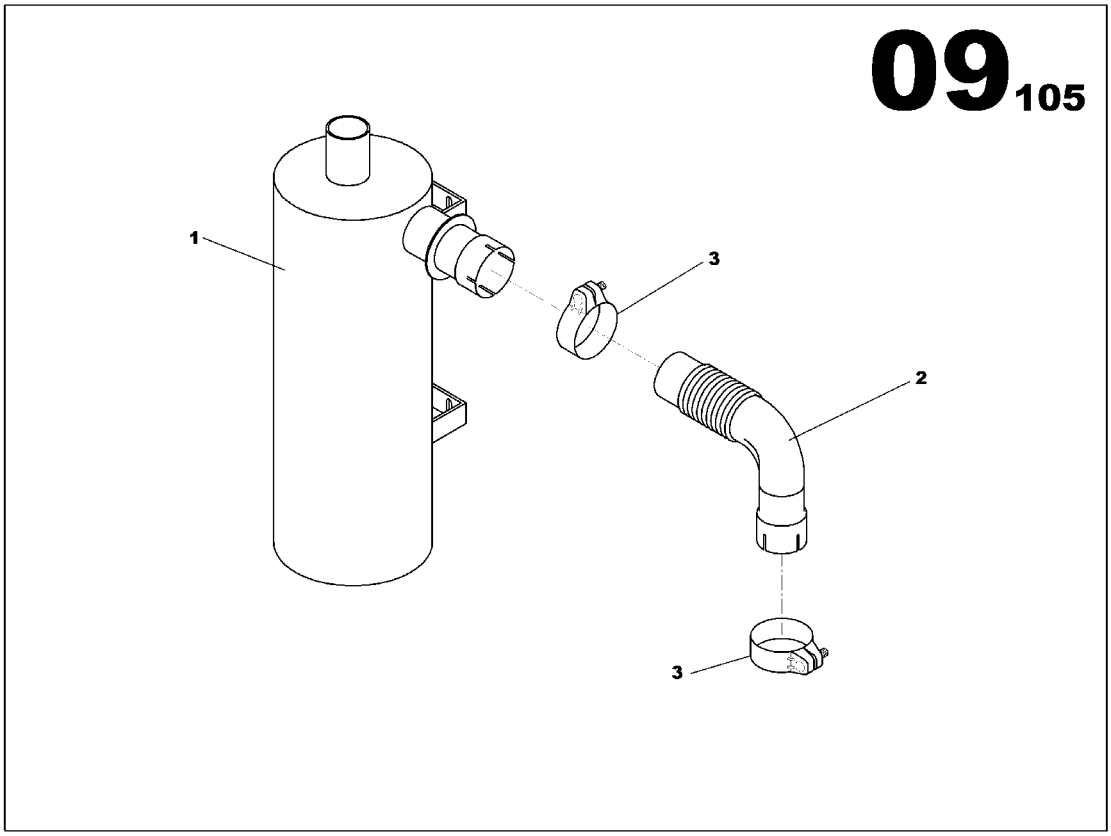

EXHAUST MUFFLER M226 ASSEMBLY
85637676

Part numbers listed are only parts used in this model

Item	Part No.	Description	Qty	Un	From SN	To SN	Order PN	Page
1	85637643	29dB MUFFLER	1	UN			85637643	
2	85509271	HOSE CLAMP D115	2	UN			85509271	
3	85637668	EXHAUST PIPE D114 JD	1	UN			85637668	

FRAME FUNCTION

Non illustré
Not illustrated

FRAME FUNCTION

Part numbers listed are only parts used in this model

Item	Part No.	Description	Qty	Un	From SN	To SN	Order PN	Page
1	17131848	FRAME M226 ASSEMBLY	1	UN			17131848	85
2	17133414	ACCESSORY G160 ASSEMBLY	1	UN			17133414	91

FRAME M226 ASSEMBLY

Non illustré
Not illustrated

FRAME M226 ASSEMBLY
17131848

Part numbers listed are only parts used in this model

Item	Part No.	Description	Qty	Un	From SN	To SN	Order PN	Page
1	17131830	FRAME M226 ASSEMBLY	1	UN			17131830	87
1	17131830	FRAME M226 ASSEMBLY	1	UN			17131830	89

FRAME M226 ASSEMBLY

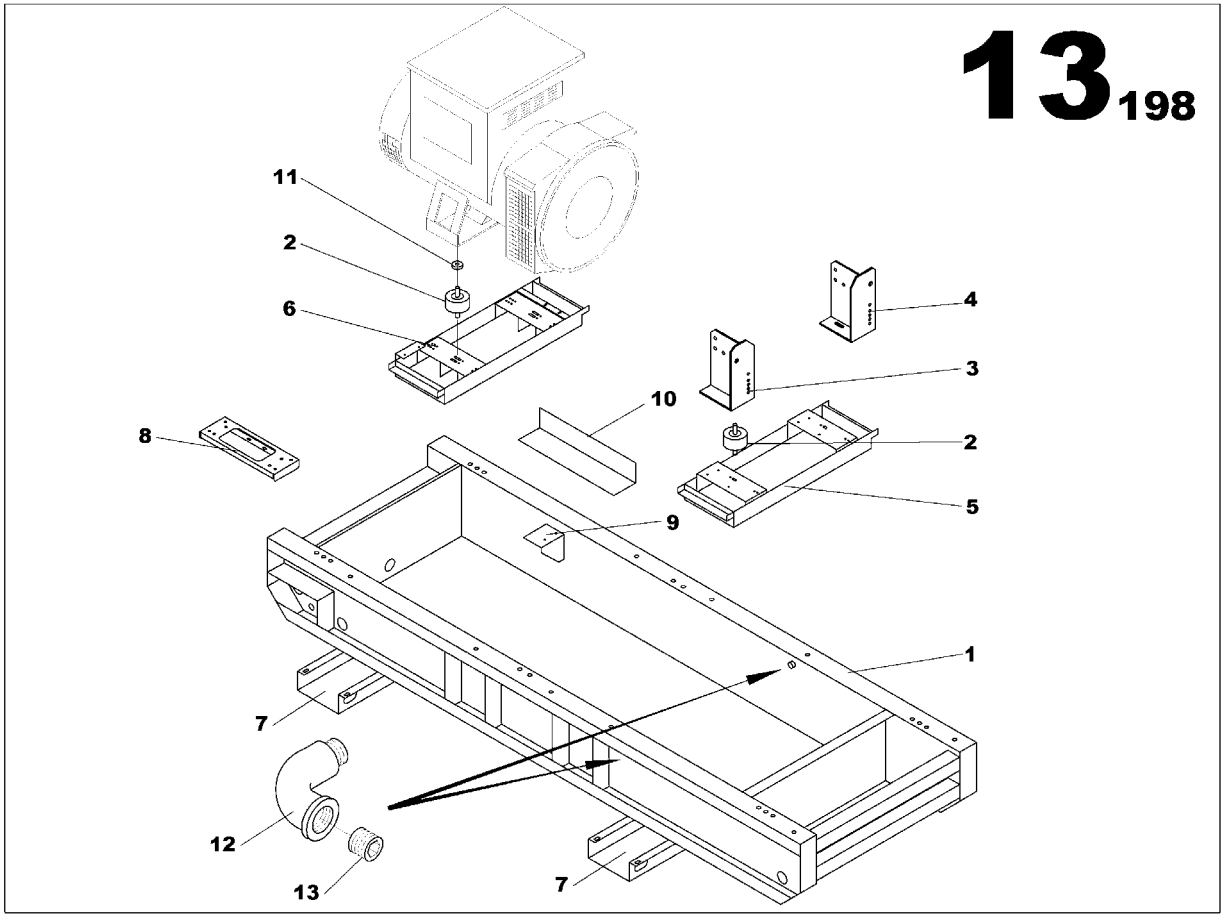

FRAME M226 ASSEMBLY
17131830

Part numbers listed are only parts used in this model

Item	Part No.	Description	Qty	Un	From SN	To SN	Order PN	Page
1	17131731	FRAME JD 6068HF/TF M226	1	UN			17131731	
2	85401883	ANTI-VIBRATION MOUNT D92 Th53	4	UN			85401883	
3	85509255	ENGINE SUPPORT JD 4045/6068 RIGHT SIDE	1	UN			85509255	
4	85509248	ENGINE SUPPORT JD 4045/6068 LEFT SIDE	1	UN			85509248	
5	17131962	ENGINE TRAVERSE M226	1	UN			17131962	
6	17131970	ALTERNATOR TRAVERSE M226	1	UN			17131970	
7	17132010	FORK LIFT CHANNEL	2	UN			17132010	
8	17132218	CONTROL PANEL BRACKET M227	1	UN			17132218	
9	17132481	AIPR BRACKET	1	UN			17132481	
10	17132622	CORNER IRON	1	UN			17132622	
11	85409050	SPACER Th10 D80	2	UN			85409050	
12	85428217	PIPE UNION ELBOW	2	UN			85428217	
13	17133323	HEXAGON PLUG 1/2G	2	UN			17133323	

FRAME M226 ASSEMBLY

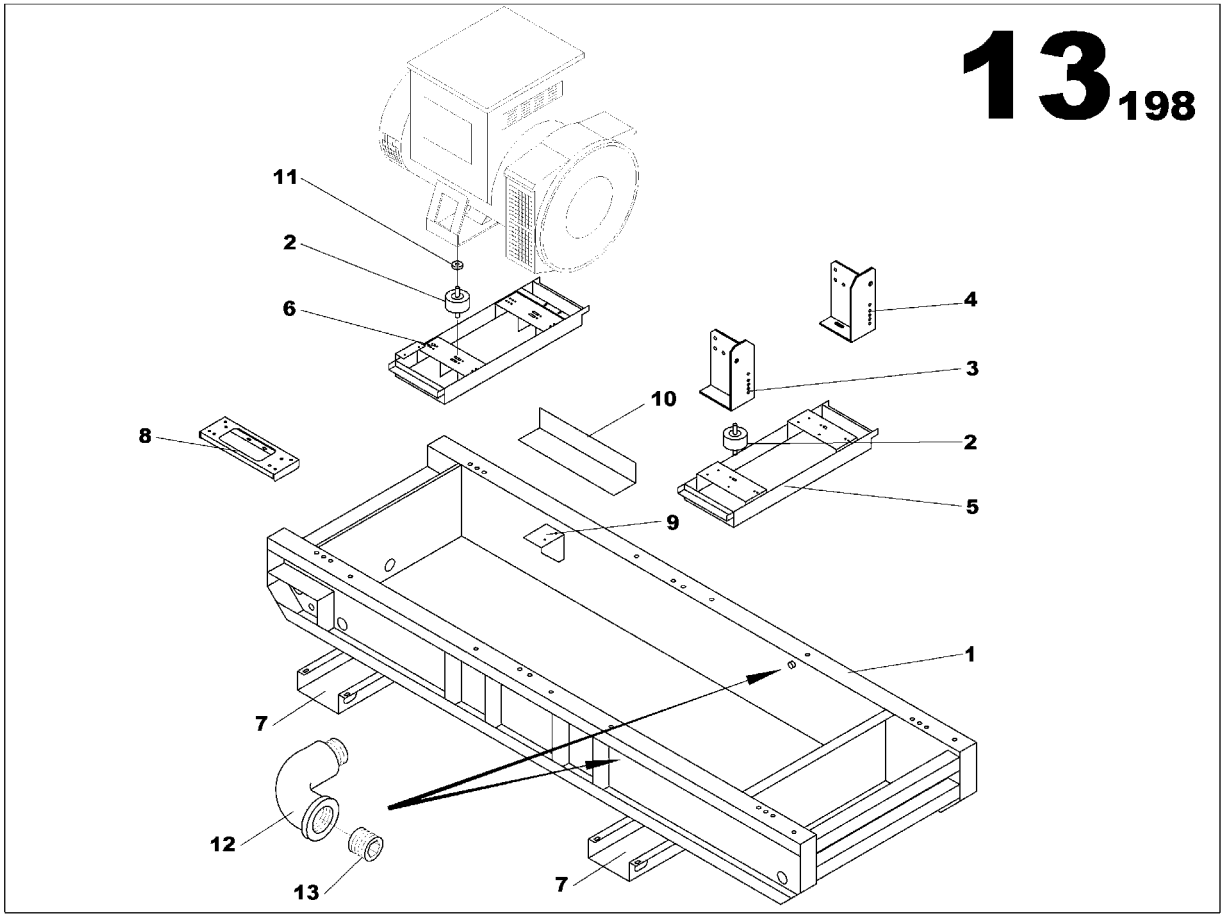

FRAME M226 ASSEMBLY
17131830

Part numbers listed are only parts used in this model

Item	Part No.	Description	Qty	Un	From SN	To SN	Order PN	Page
1	17131731	FRAME JD 6068HF/TF M226	1	UN			17131731	
2	85401883	ANTI-VIBRATION MOUNT D92 Th53	4	UN			85401883	
3	85509255	ENGINE SUPPORT JD 4045/6068 RIGHT SIDE	1	UN			85509255	
4	85509248	ENGINE SUPPORT JD 4045/6068 LEFT SIDE	1	UN			85509248	
5	17131962	ENGINE TRAVERSE M226	1	UN			17131962	
6	17131970	ALTERNATOR TRAVERSE M226	1	UN			17131970	
7	17132010	FORK LIFT CHANNEL	2	UN			17132010	
8	17132218	CONTROL PANEL BRACKET M227	1	UN			17132218	
9	17132481	AIPR BRACKET	1	UN			17132481	
10	17132622	CORNER IRON	1	UN			17132622	
11	85409050	SPACER Th10 D80	2	UN			85409050	
12	85428217	PIPE UNION ELBOW	2	UN			85428217	
13	17133323	HEXAGON PLUG 1/2G	2	UN			17133323	

ACCESSORY G160 ASSEMBLY

Non illustré
Not illustrated

ACCESSORY G160 ASSEMBLY
17133414

Part numbers listed are only parts used in this model

Item	Part No.	Description	Qty	Un	From SN	To SN	Order PN	Page
1	17133406	G160 ACCESSORY ASSEMBLY	1	UN			17133406	93

G160 ACCESSORY ASSEMBLY

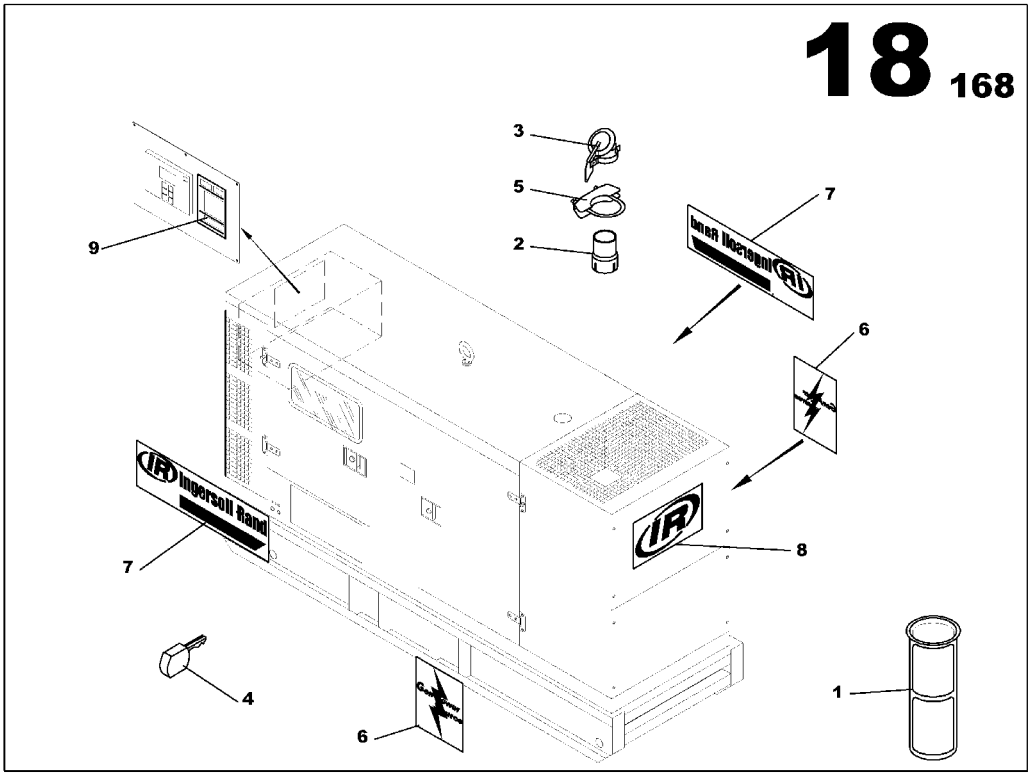

G160 ACCESSORY ASSEMBLY
17133406

Part numbers listed are only parts used in this model

Item	Part No.	Description	Qty	Un	From SN	To SN	Order PN	Page
1	85633386	FUEL FILTER SCREEN	1	UN			85633386	
2	85422772	MUFFLER EXTENSION D114	1	UN			85422772	
3	85404341	EXHAUST RAIN FLAP D114	1	UN			85404341	
4	85509263	WBH LATCHE KEY	1	UN			85509263	
5	85509271	HOSE CLAMP D115	1	UN			85509271	
6	85506467	STICKER	1	UN			85506467	
7	85503837	STICKER G160	2	UN			85503837	
8	85639557	DECALS ASSEMBLY	1	UN			85639557	95
9	22207054	STICKER OPERATING INSTRUCTIONS	1	UN			22207054	

DECALS ASSEMBLY

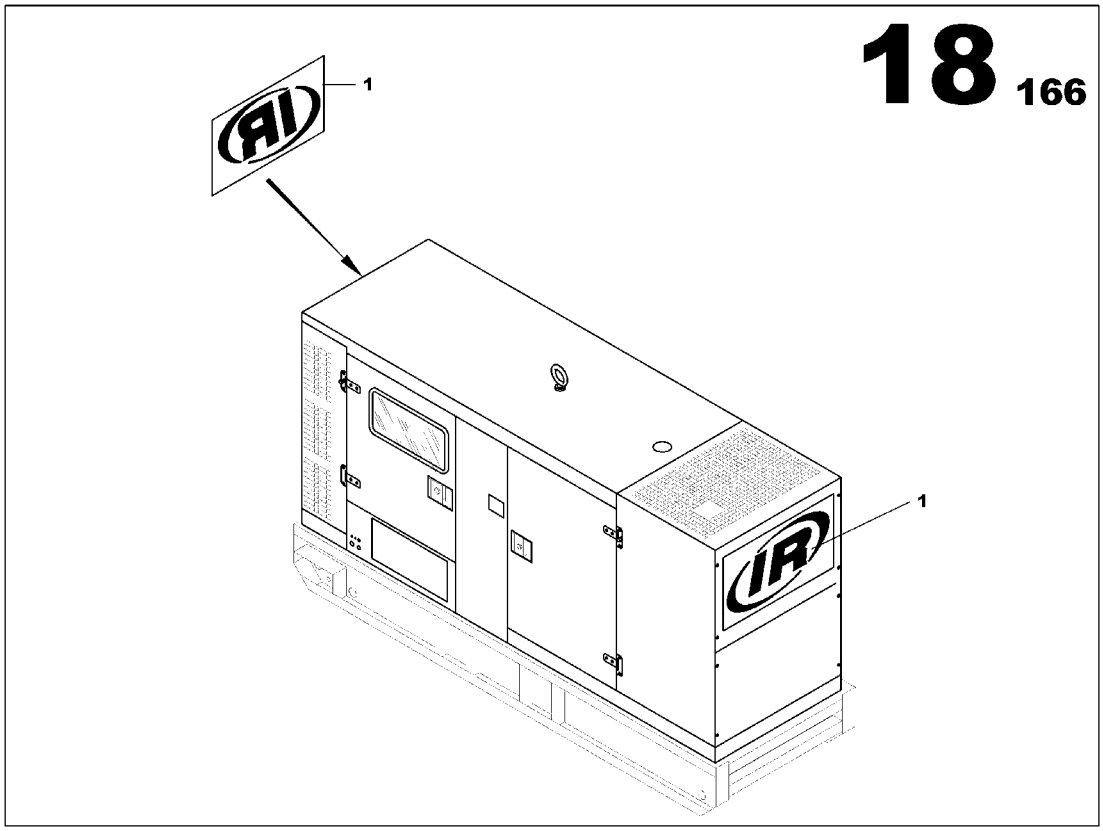

DECALS ASSEMBLY
85639557

Part numbers listed are only parts used in this model

Item	Part No.	Description	Qty	Un	From SN	To SN	Order PN	Page
1	85500213	STICKER IR	2	UN			85500213	

CANOPY FONCTION

Non illustré
Not illustrated

CANOPY FONCTION

Part numbers listed are only parts used in this model

Item	Part No.	Description	Qty	Un	From SN	To SN	Order PN	Page
1	17131863	FITTINGS M226 JD6068TF ASSEMBLY	1	UN			17131863	99
2	17132069	CANOPY M226 ASSEMBLY	1	UN			17132069	111
3	85491991	EMERGENCY STOP PANEL ASSEMBLY	1	UN			85491991	117
4	85634616	EMERGENCY STOP PANEL ASSEMBLY	1	UN			85634616	119
5	85638906	EARTH ROD WITH CABLE CANOPY ASSEMBLY	1	UN			85638906	123

FITTINGS M226 JD6068TF ASSEMBLY

Non illustré
Not illustrated

FITTINGS M226 JD6068TF ASSEMBLY
17131863

Part numbers listed are only parts used in this model

Item	Part No.	Description	Qty	Un	From SN	To SN	Order PN	Page
1	17131855	M226 MISCELLANEOUS ASSEMBLY	1	UN			17131855	101

M226 MISCELLANEOUS ASSEMBLY

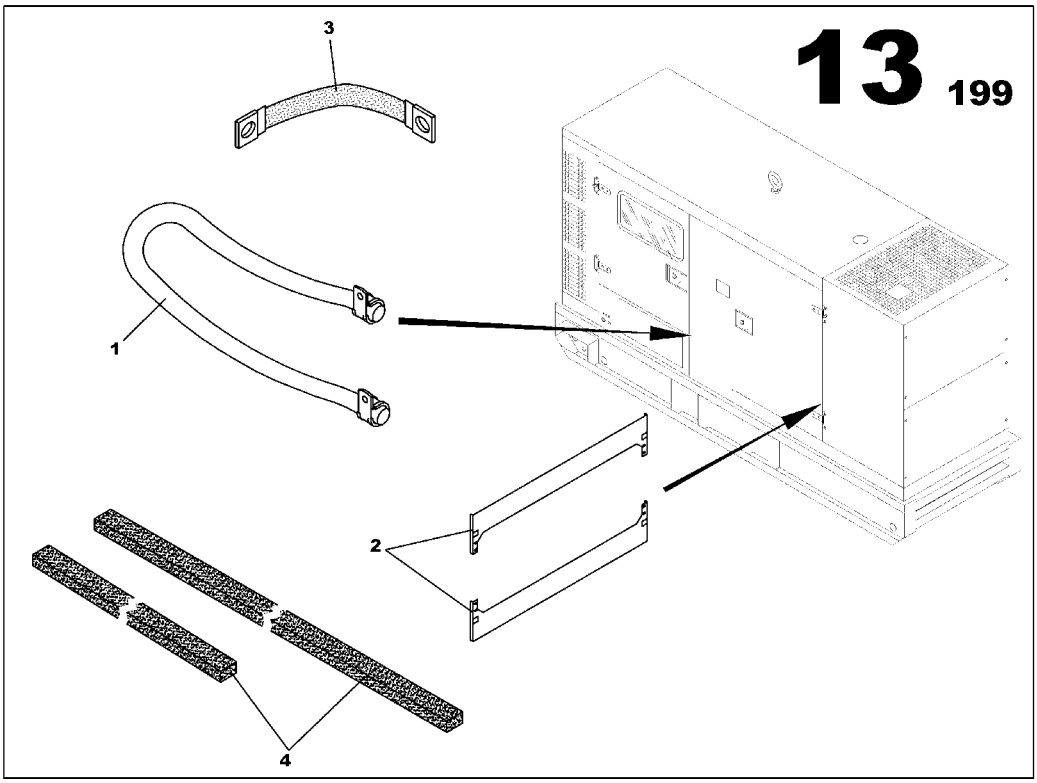

M226 MISCELLANEOUS ASSEMBLY
17131855

Part numbers listed are only parts used in this model

Item	Part No.	Description	Qty	Un	From SN	To SN	Order PN	Page
1	17131319	OIL CRANKCASE	1	UN			17131319	103
2	85638245	RADIATOR BASE PLATE ASSEMBLY	1	UN			85638245	105
3	85407922	GROUND WIRES ASSEMBLY	1	UN			85407922	107
4	17133364	CANOPY/FRAME M226 GASKET ASSEMBLY	1	UN			17133364	109

OIL CRANKCASE

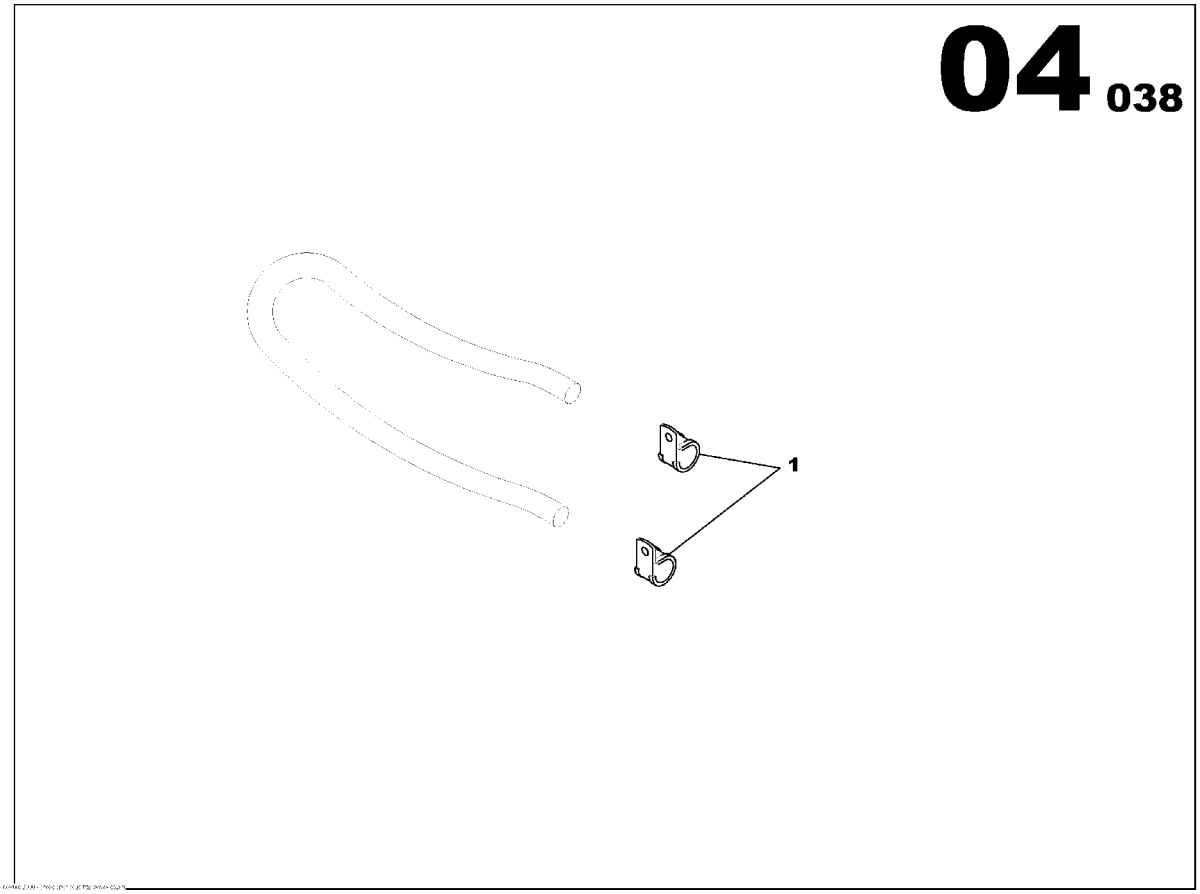

OIL CRANKCASE
17131319

Part numbers listed are only parts used in this model

Item	Part No.	Description	Qty	Un	From SN	To SN	Order PN	Page
1	17133331	CLAMP D36	2	UN			17133331	

RADIATOR BASE PLATE ASSEMBLY

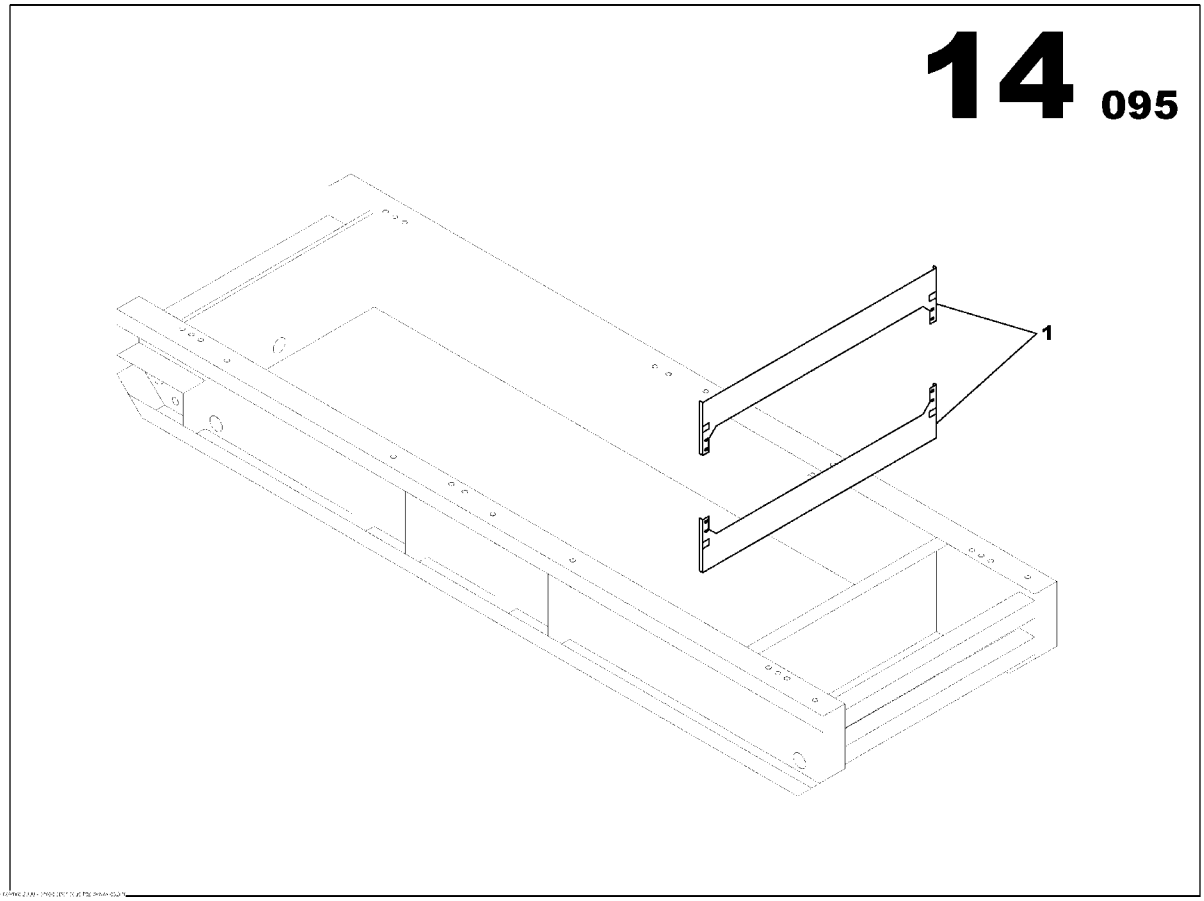

RADIATOR BASE PLATE ASSEMBLY
85638245

Part numbers listed are only parts used in this model

Item	Part No.	Description	Qty	Un	From SN	To SN	Order PN	Page
1	85638211	RADIATOR PANEL M129 JD 4045H	2	UN			85638211	

GROUND WIRES ASSEMBLY

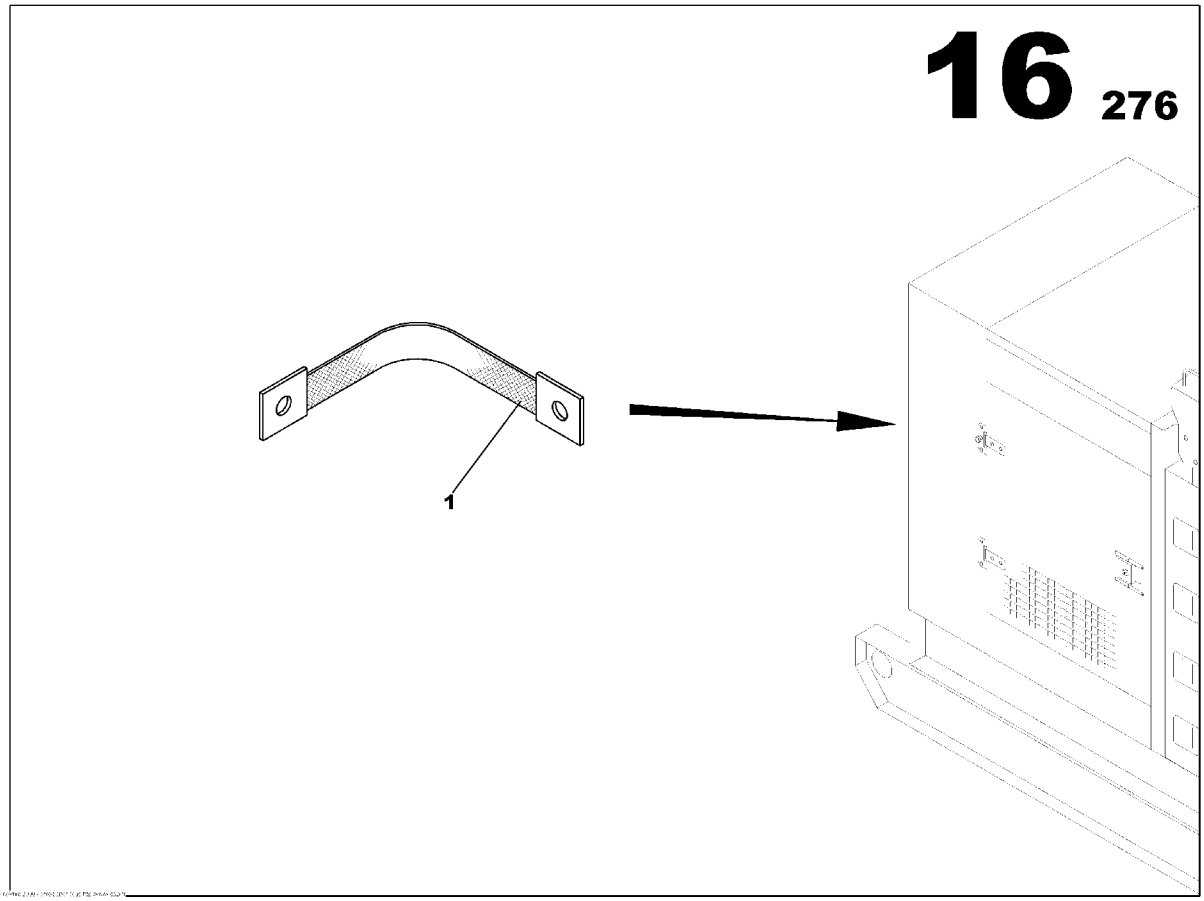

GROUND WIRES ASSEMBLY
85407922

Part numbers listed are only parts used in this model

Item	Part No.	Description	Qty	Un	From SN	To SN	Order PN	Page
1	85406460	GROUND WIRES 16mm2	4	UN			85406460	

CANOPY/FRAME M226 GASKET ASSEMBLY

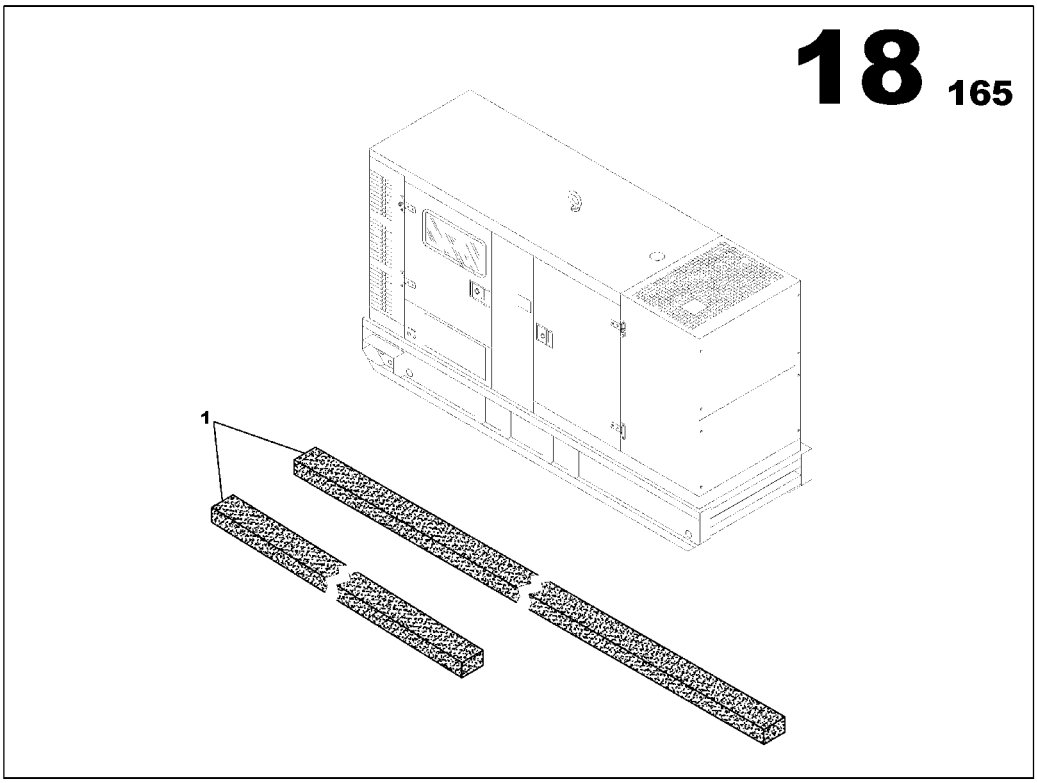

CANOPY/FRAME M226 GASKET ASSEMBLY
17133364

Part numbers listed are only parts used in this model

Item	Part No.	Description	Qty	Un	From SN	To SN	Order PN	Page
1	17133349	LINEAR SEAL	1.09	M			17133349	
1	17133349	LINEAR SEAL	2.37	M			17133349	

CANOPY M226 ASSEMBLY

Non illustré
Not illustrated

CANOPY M226 ASSEMBLY
17132069

Part numbers listed are only parts used in this model

Item	Part No.	Description	Qty	Un	From SN	To SN	Order PN	Page
1	17132051	CANOPY M226 ASSEMBLY	1	UN			17132051	113

CANOPY M226 ASSEMBLY

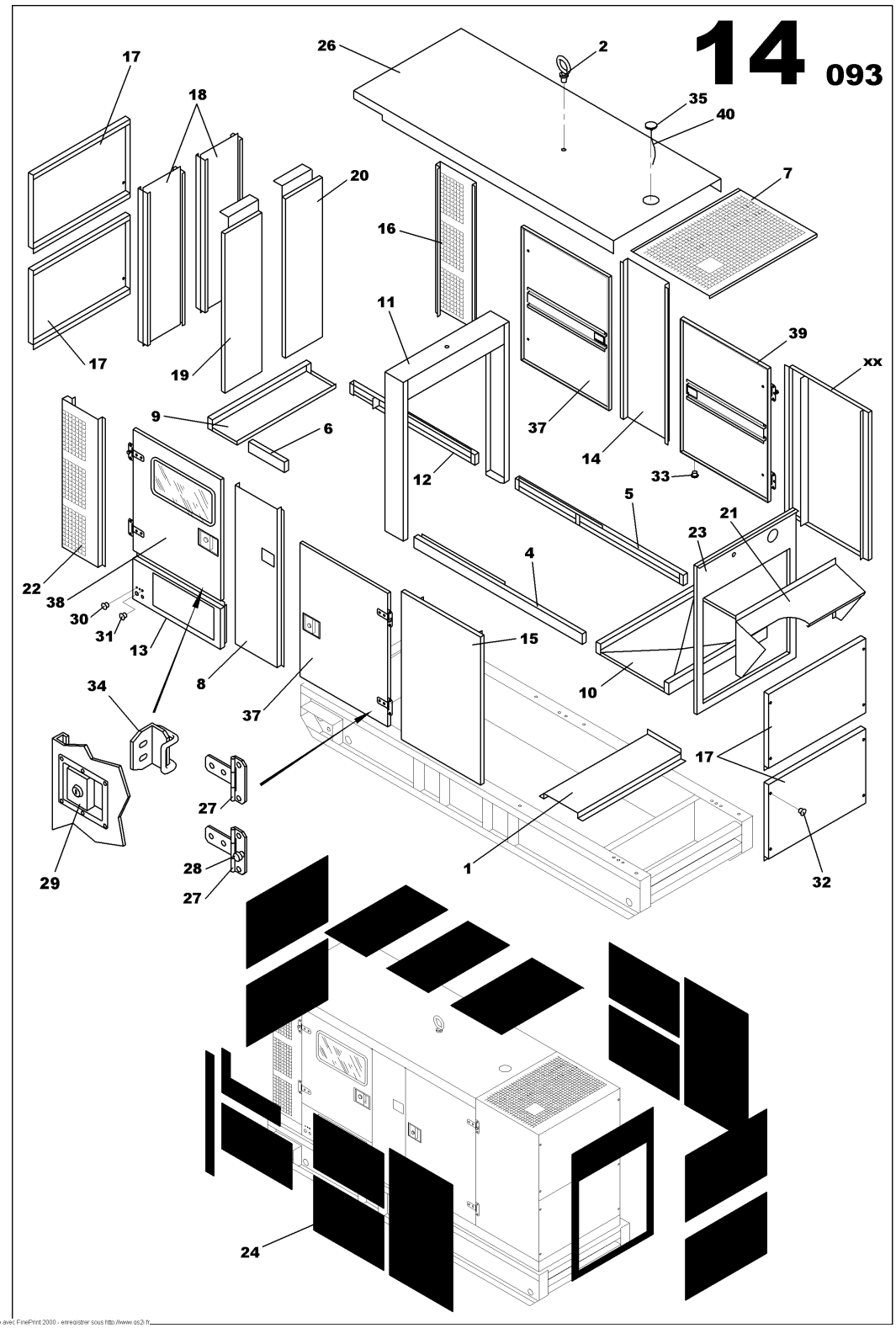

imprimé avec FinePrint 2000 - enregistrer sous http://www.qs2i.fr

CANOPY M226 ASSEMBLY
17132051

Part numbers listed are only parts used in this model

Item	Part No.	Description	Qty	Un	From SN	To SN	Order PN	Page
1	85637601	MUFFLER BRACKET M226	1	UN			85637601	
2	85491892	LIFTING EYE D61	1	UN			85491892	
4	85638005	BASEFRAME SIDE M226	1	UN			85638005	
5	85638013	BASEFRAME SIDE M226	1	UN			85638013	
6	85638021	BASEFRAME SIDE M226	1	UN			85638021	
7	85638047	AIR OUTLET LOUVER M226	1	UN			85638047	
8	85638054	RIGHT PANEL UPRIGHTS M226	1	UN			85638054	
9	85638070	REAR CLOSURE PANEL CANOPY M226	1	UN			85638070	
10	85638088	HOOD FRONT UNDERSHEETING M226	1	UN			85638088	
11	85638096	SUPPORT ARCH M226	1	UN			85638096	
12	17132028	BASEFRAME SIDE M226	1	UN			17132028	
13	17132036	BASEFRAME SIDE M226	1	UN			17132036	
13	17132036	BASEFRAME SIDE M226	1	UN			17132036	
14	17132044	LEFT PANEL UPRIGHTS M226	1	UN			17132044	
15	85638120	RIGHT FORWARD PLENUM PANEL M226	1	UN			85638120	
16	85638138	RIGHT REAR PLENUM PANEL M226	1	UN			85638138	
17	85638153	M226 HEAD/REAR PANEL	4	UN			85638153	
18	85638179	SOUND SHIELD M226	2	UN			85638179	
19	85638187	AIR DEFLECTOR M226 REAR	1	UN			85638187	
20	85638195	AIR DEFLECTOR M226 REAR	1	UN			85638195	
21	85638203	AIR DEFLECTOR M226 REAR	1	UN			85638203	
22	17132101	LEFT REAR PLENUM PANEL M226	1	UN			17132101	
23	17132135	RADIATOR PANEL M129 JD 4045H	1	UN			17132135	
24	17132143	SOUNDPROOF PANELS BATCH M226	1	UN			17132143	
26	85638252	CANOPY TOP M226	1	UN			85638252	
27	85406155	DOOR HINGE	8	UN			85406155	
28	85406189	ANTI-VIBRATION MOUNT 140daN 15mm	4	UN			85406189	

CANOPY M226 ASSEMBLY

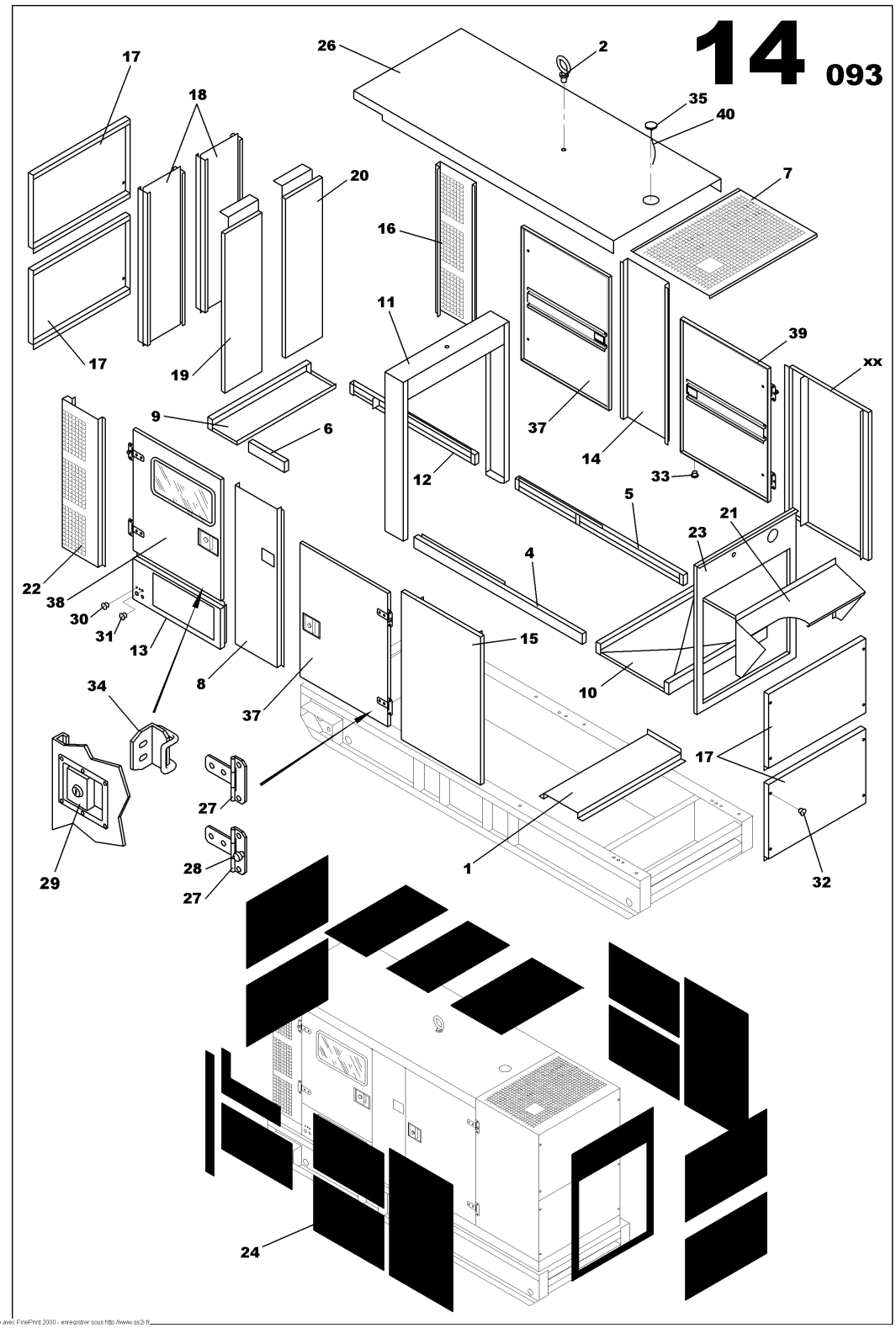

imprimé avec FinePrint 2000 - enregistrer sous http://www.qs2i.fr

CANOPY M226 ASSEMBLY
17132051

Part numbers listed are only parts used in this model

Item	Part No.	Description	Qty	Un	From SN	To SN	Order PN	Page
29	85509305	CANOPY DOOR LOCK KEY LOCK *-Key: N° 455 supply without key*	4	UN			85509305	
30	85634335	PLUG D13,7	2	UN			85634335	
31	17132150	PLUG D16.7	1	UN			17132150	
32	85417186	PLUG D22.8	16	UN			85417186	
33	85406213	PLUG D6.9	6	UN			85406213	
34	85492460	STRIKER PLATE M400 CANOPY DOOR	4	UN			85492460	
35	85621142	FLAP D160	1	UN			85621142	
37	85638260	CANOPY DOOR M226 HINGE ON RIGHT	2	UN			85638260	
38	85638278	CONTROL PANEL DOOR M226	1	UN			85638278	
39	17132184	CANOPY DOOR M226 HINGE ON RIGHT	1	UN			17132184	
39	17132184	CANOPY DOOR M226 HINGE ON RIGHT	1	UN			17132184	
40	85632016	CHAIN	1	UN			85632016	

EMERGENCY STOP PANEL ASSEMBLY

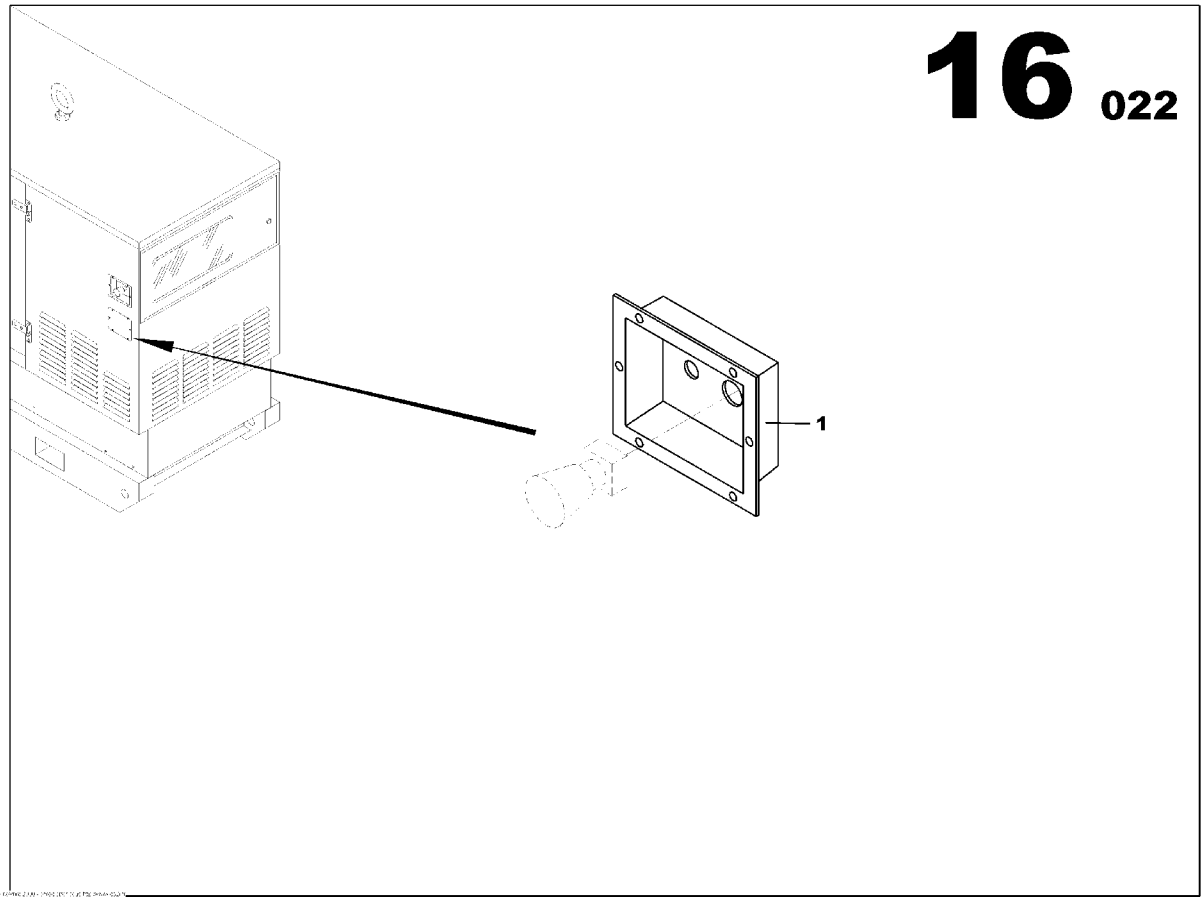

EMERGENCY STOP PANEL ASSEMBLY
85491991

Part numbers listed are only parts used in this model

Item	Part No.	Description	Qty	Un	From SN	To SN	Order PN	Page
1	85407294	EMERGENCY STOP PANEL	1	UN			85407294	

EMERGENCY STOP PANEL ASSEMBLY

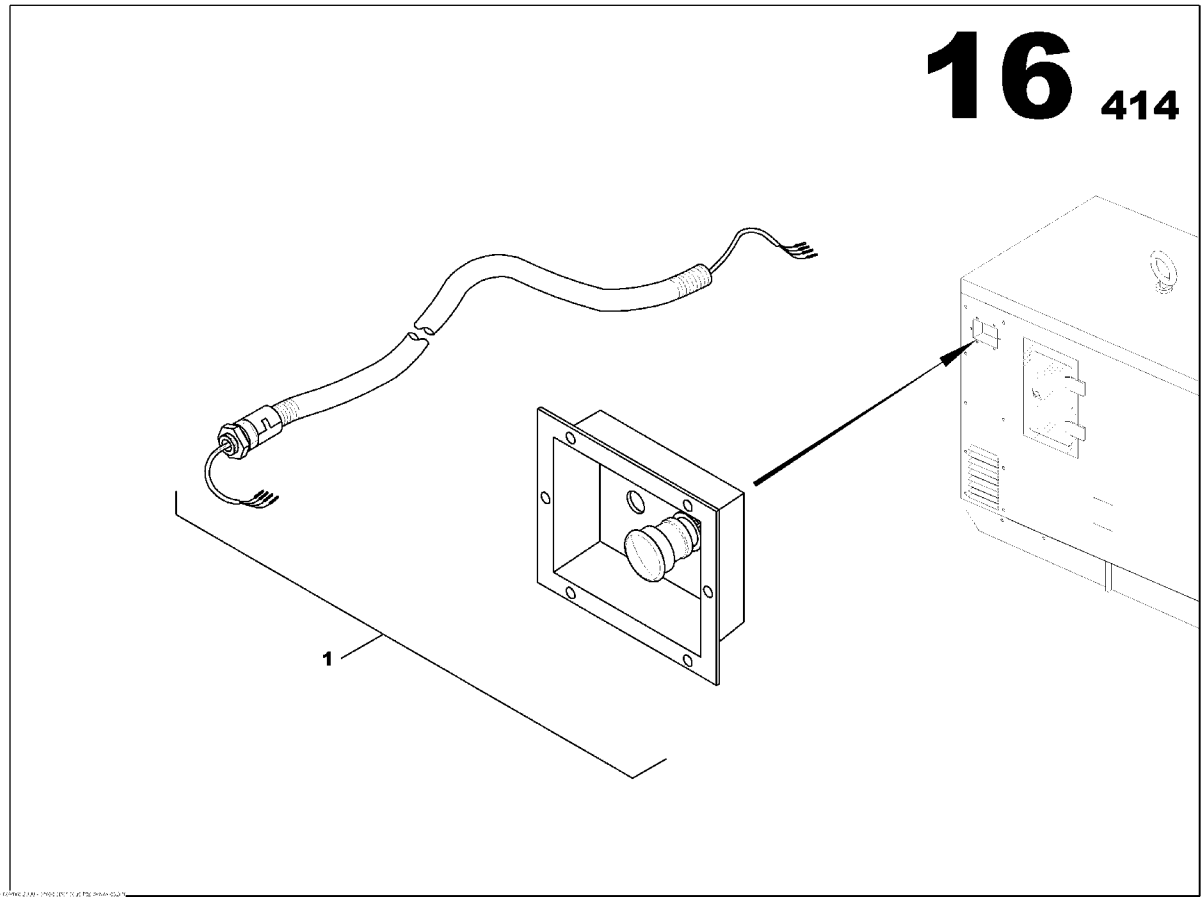

EMERGENCY STOP PANEL ASSEMBLY
85634616

Part numbers listed are only parts used in this model

Item	Part No.	Description	Qty	Un	From SN	To SN	Order PN	Page
1	85634624	EMERGENCY STOP PANEL ASSEMBLY	1	UN			85634624	121

EMERGENCY STOP PANEL ASSEMBLY

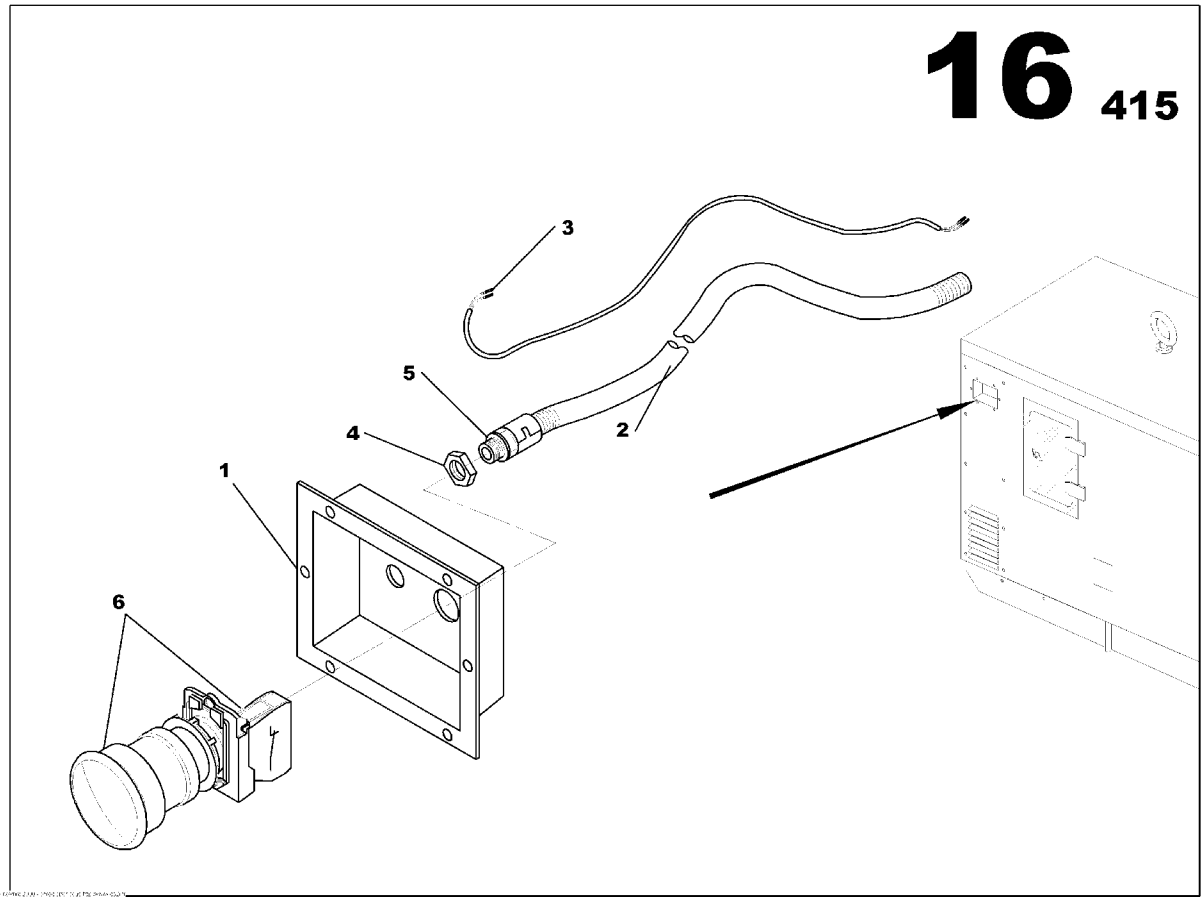

EMERGENCY STOP PANEL ASSEMBLY
85634624

Part numbers listed are only parts used in this model

Item	Part No.	Description	Qty	Un	From SN	To SN	Order PN	Page
1	85407294	EMERGENCY STOP PANEL	1	UN			85407294	
2	85635241	ELECTRICAL SHAFT D09	1.2	ML			85635241	
3	85635621	EMERGENCY STOP WIRING LOOM	1	UN			85635621	
4	85506061	GLAND NUT SCREW PG9	1	UN			85506061	
5	85499663	PIPE UNION PG9	1	UN			85499663	
6	85631422	EMERGENCY STOP BUTTON	1	UN			85631422	

EARTH ROD WITH CABLE CANOPY ASSEMBLY

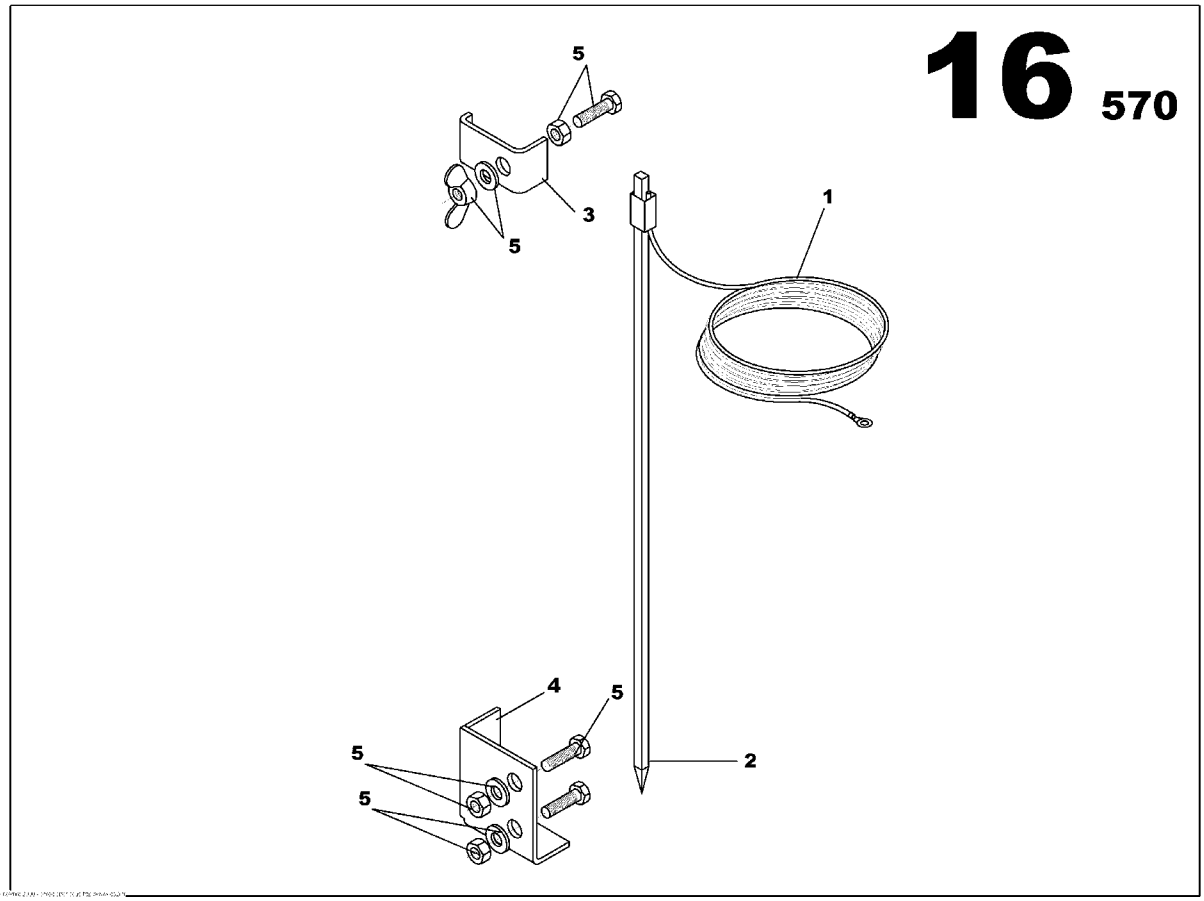

EARTH ROD WITH CABLE CANOPY ASSEMBLY
85638906

Part numbers listed are only parts used in this model

Item	Part No.	Description	Qty	Un	From SN	To SN	Order PN	Page
1	85408227	NEUTRAL/EARTH SYSTEM CABLE 25mm2 L10000 Gr/Ye	1	UN			85408227	
2	85408334	EARTH ROD L1000	1	UN			85408334	
3	85639086	EARTH ROD BRACKET	1	UN			85639086	
4	85639094	EARTH ROD BRACKET	1	UN			85639094	
5	85639391	SCREWS ASSEMBLY	1	UN			85639391	125

SCREWS ASSEMBLY

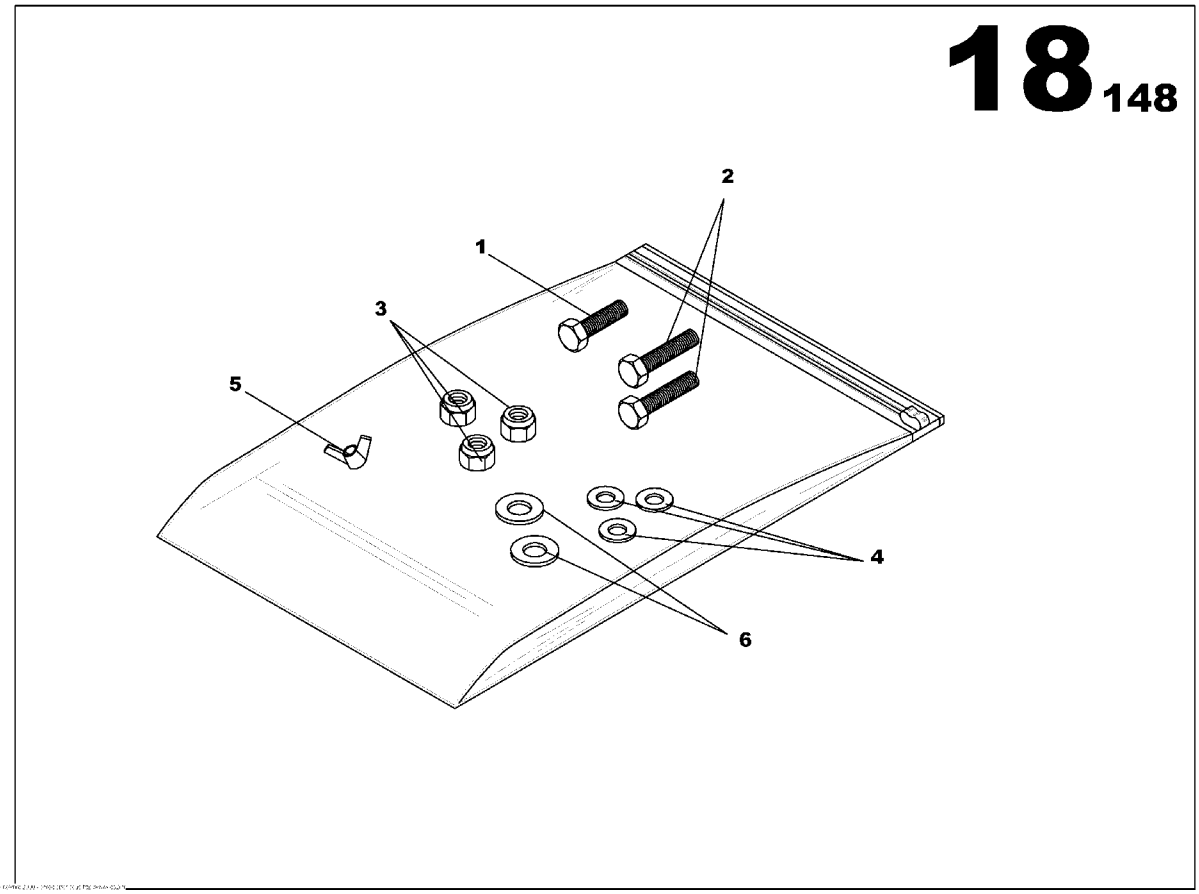

SCREWS ASSEMBLY
85639391

Part numbers listed are only parts used in this model

Item	Part No.	Description	Qty	Un	From SN	To SN	Order PN	Page
1	85626356	SCREW H M6x35	1	UN			85626356	
2	85639326	SCREW H M6x40	2	UN			85639326	
3	85507911	NUT M6	3	UN			85507911	
4	85507929	WASHER M6	3	UN			85507929	
5	85410157	WING NUT M6	1	UN			85410157	
6	85429793	WASHER 6x14	2	UN			85429793	

ELECTRICAL FUNCTION

Non illustré
Not illustrated

ELECTRICAL FUNCTION

Part numbers listed are only parts used in this model

Item	Part No.	Description	Qty	Un	From SN	To SN	Order PN	Page
1	17132341	PROTECTION PANEL OPTION	1	UN			17132341	129
2	17132762	CIRCUIT BREAKER PROTECTION PANEL AIPR ASSEMBLY	1	UN			17132762	131
3	85639599	DECALS TERMINAL BLOCK ASSEMBLY	1	UN			85639599	135
4		CONTROL PANEL FONCTION	1	UN				137
5		ELECTRIC SUPPLY FUNCTION	1	UN				169

PROTECTION PANEL OPTION

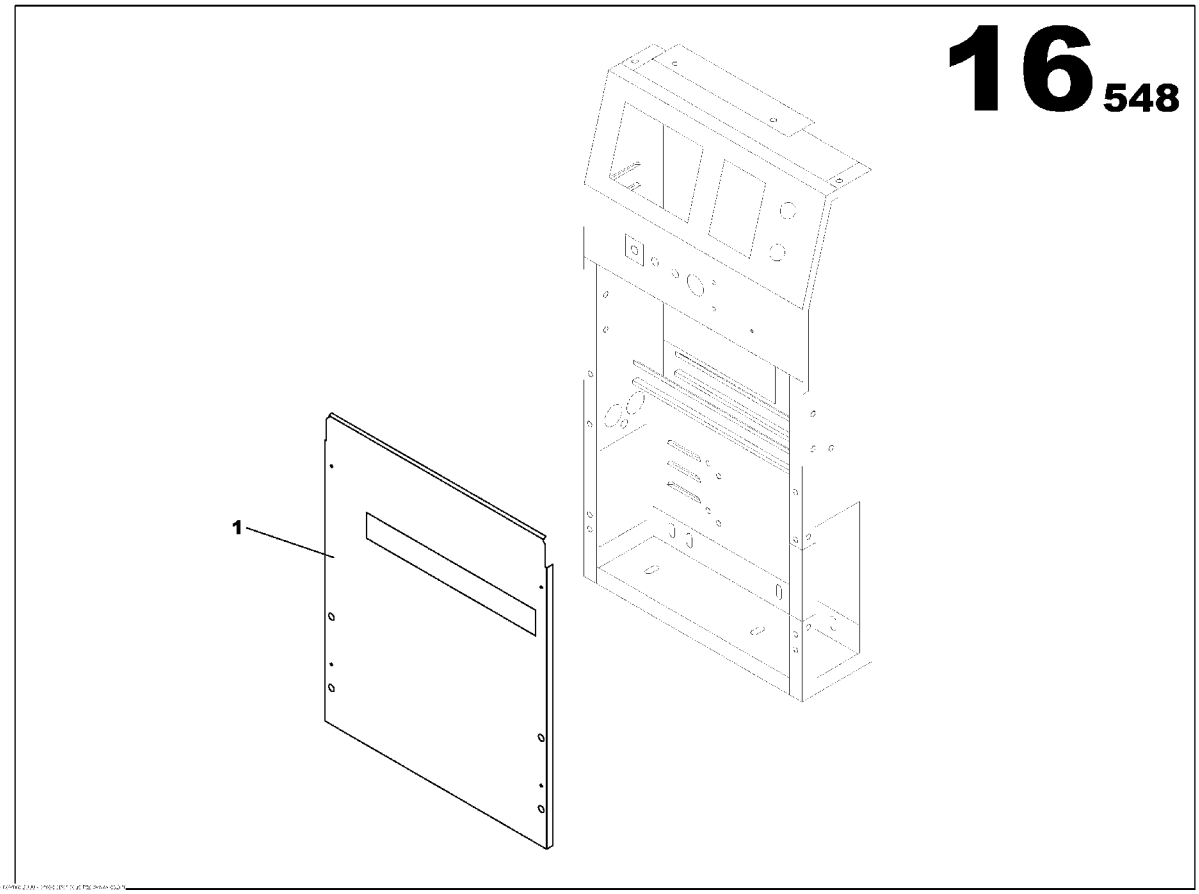

PROTECTION PANEL OPTION
17132341

Part numbers listed are only parts used in this model

Item	Part No.	Description	Qty	Un	From SN	To SN	Order PN	Page
1	17132333	S3500 CLOSURE PANEL	1	UN			17132333	

CIRCUIT BREAKER PROTECTION PANEL AIPR ASSEMBLY

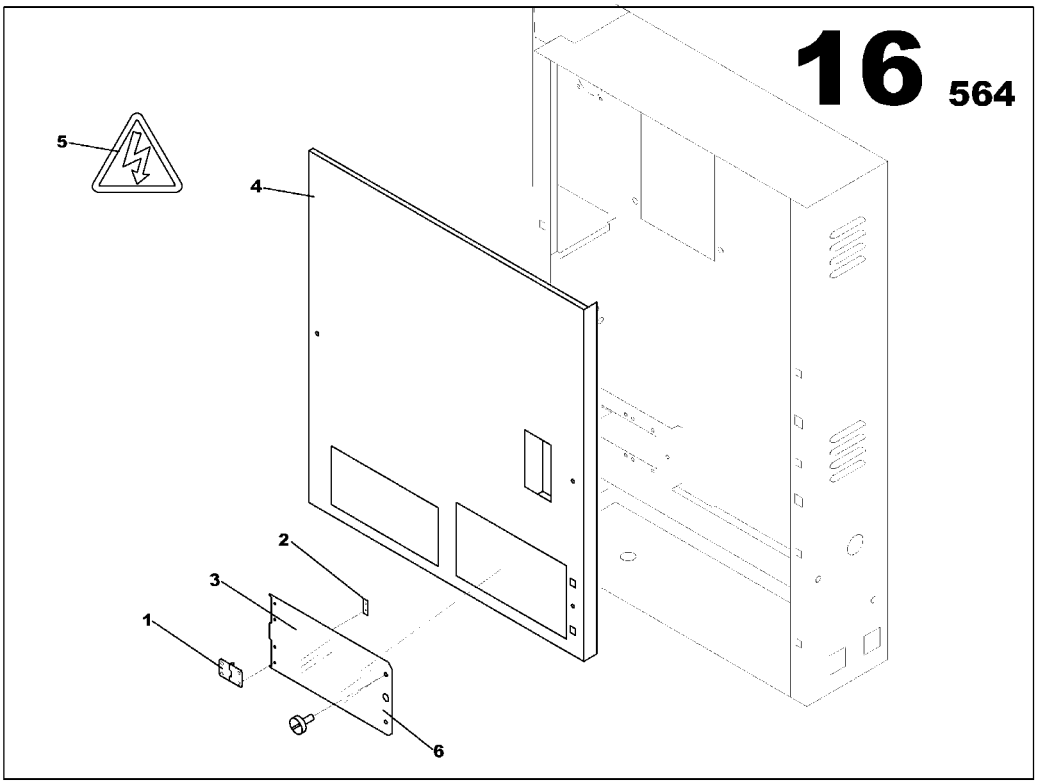

CIRCUIT BREAKER PROTECTION PANEL AIPR ASSEMBLY 17132762

Part numbers listed are only parts used in this model

Item	Part No.	Description	Qty	Un	From SN	To SN	Order PN	Page
1	85406130	DOOR HINGE	2	UN			85406130	
2	85407708	HINGE FIXING PLATE M214	2	UN			85407708	
3	17132549	AIPR DOOR	1	UN			17132549	
4	17132770	AIPR PANEL	1	UN			17132770	
5	85409175	STICKER ELECTRIC DANGER SYMBOL	1	UN			85409175	
6	85409217	SLAM SHUT ASSEMBLY	2	UN			85409217	133

SLAM SHUT ASSEMBLY

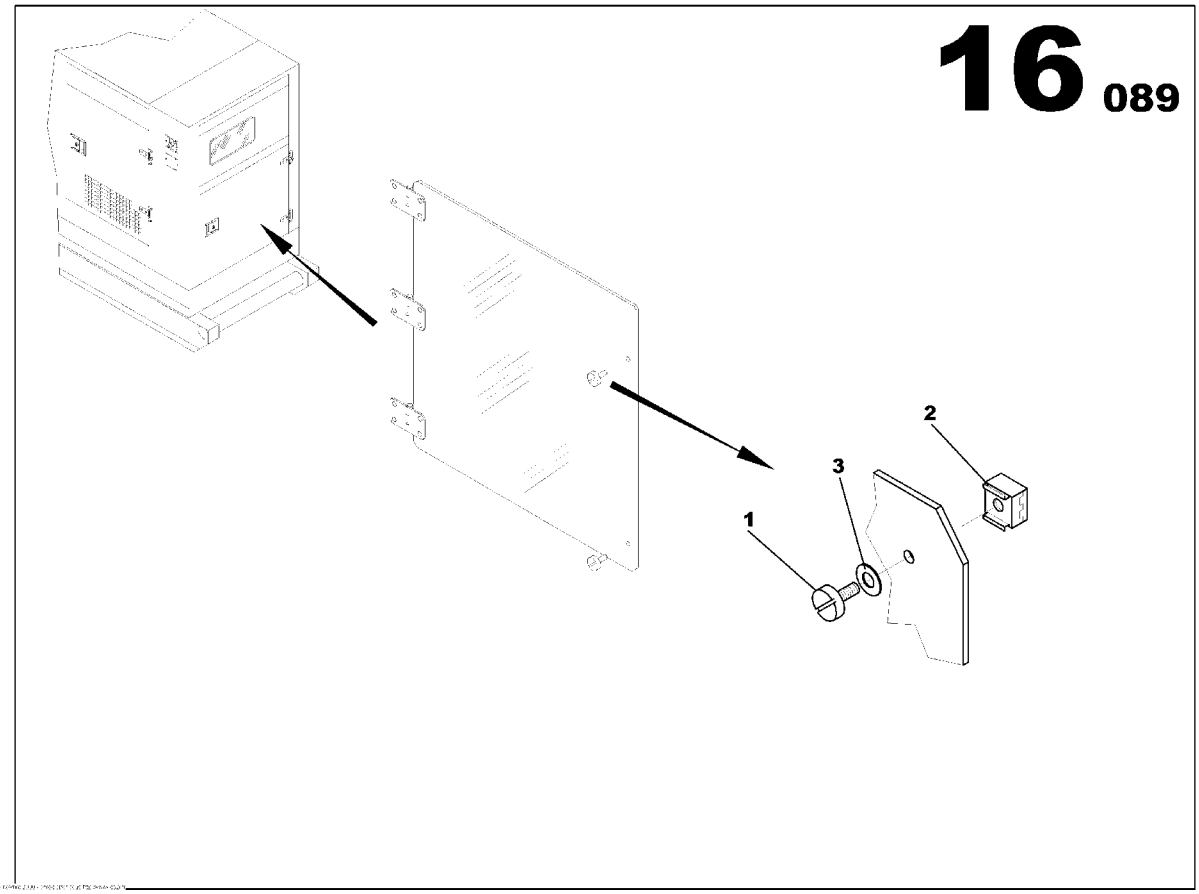

SLAM SHUT ASSEMBLY
85409217

Part numbers listed are only parts used in this model

Item	Part No.	Description	Qty	Un	From SN	To SN	Order PN	Page
1	85409225	1/4 TURN SCREW D9 *-Order 31801021601NE*	2	UN			85409225	
2	85409233	CAPTIVE NUT FOR 1/4 TURN BOLT *-Order 31801021601NE*	2	UN			85409233	
3	85409241	WASHER FOR 1/4 TURN FASTENER *-Order 31801021601NE*	2	UN			85409241	

DECALS TERMINAL BLOCK ASSEMBLY

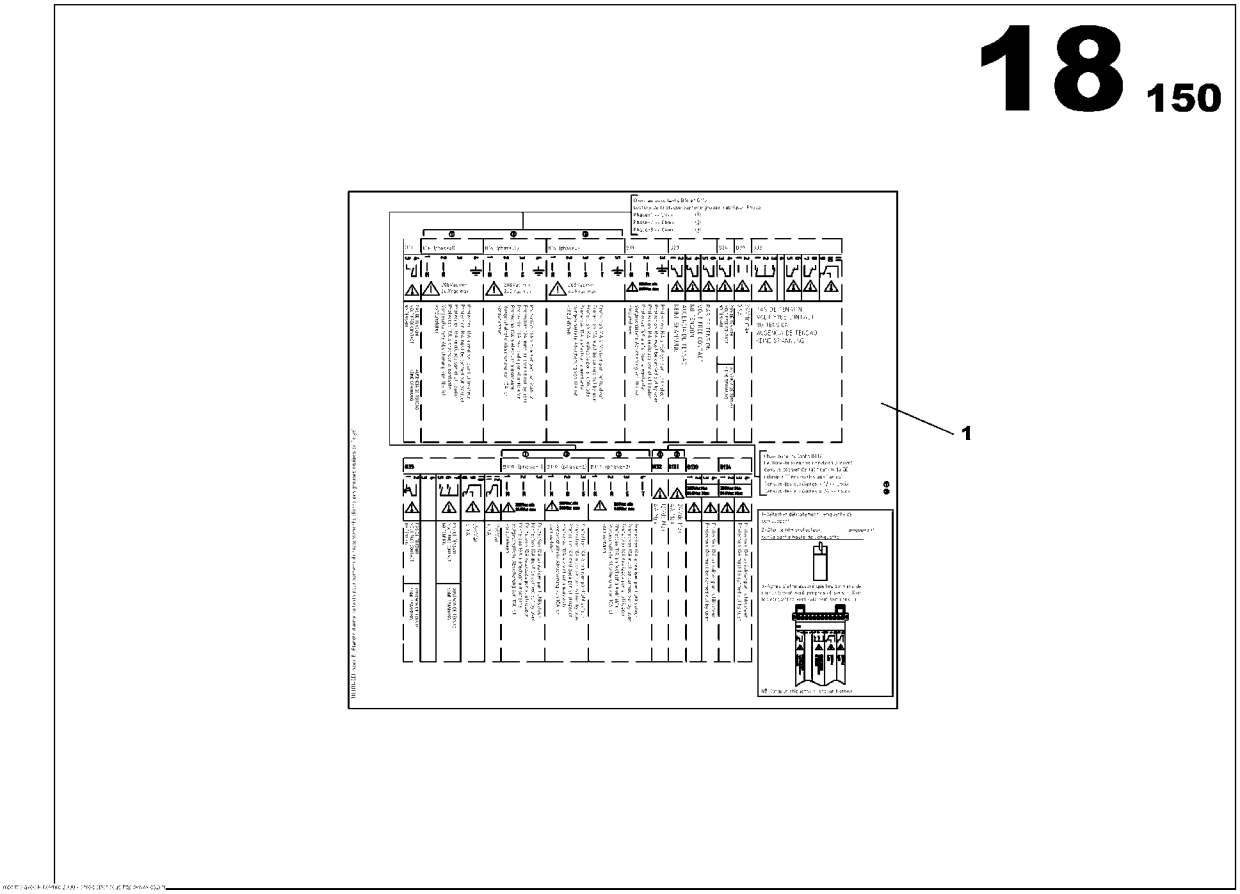

DECALS TERMINAL BLOCK ASSEMBLY
85639599

Part numbers listed are only parts used in this model

Item	Part No.	Description	Qty	Un	From SN	To SN	Order PN	Page
1	85639573	STICKER TERMINAL BLOCK	1	UN	03012825		85639573	

CONTROL PANEL FONCTION

Non illustré
Not illustrated

CONTROL PANEL FONCTION

Part numbers listed are only parts used in this model

Item	Part No.	Description	Qty	Un	From SN	To SN	Order PN	Page
1	85411569	TELYS OPTION CB CARD	1	UN			85411569	139
2	85411965	TELYS OPTION LOW FUEL LEVEL	1	UN			85411965	
3	17133174	ELECTRIC PACK OPTION	1	UN			17133174	143
4	17130691	EARTH LEAKAGE RELAY OPTION	1	UN			17130691	147
5	85636264	S3500 DASHBOARD OPTION	1	UN			85636264	151
6	17133224	AIPR OPTION	1	UN			17133224	
7		WIRING LOOM FUNCTION	1	UN				163

TELYS OPTION CB CARD

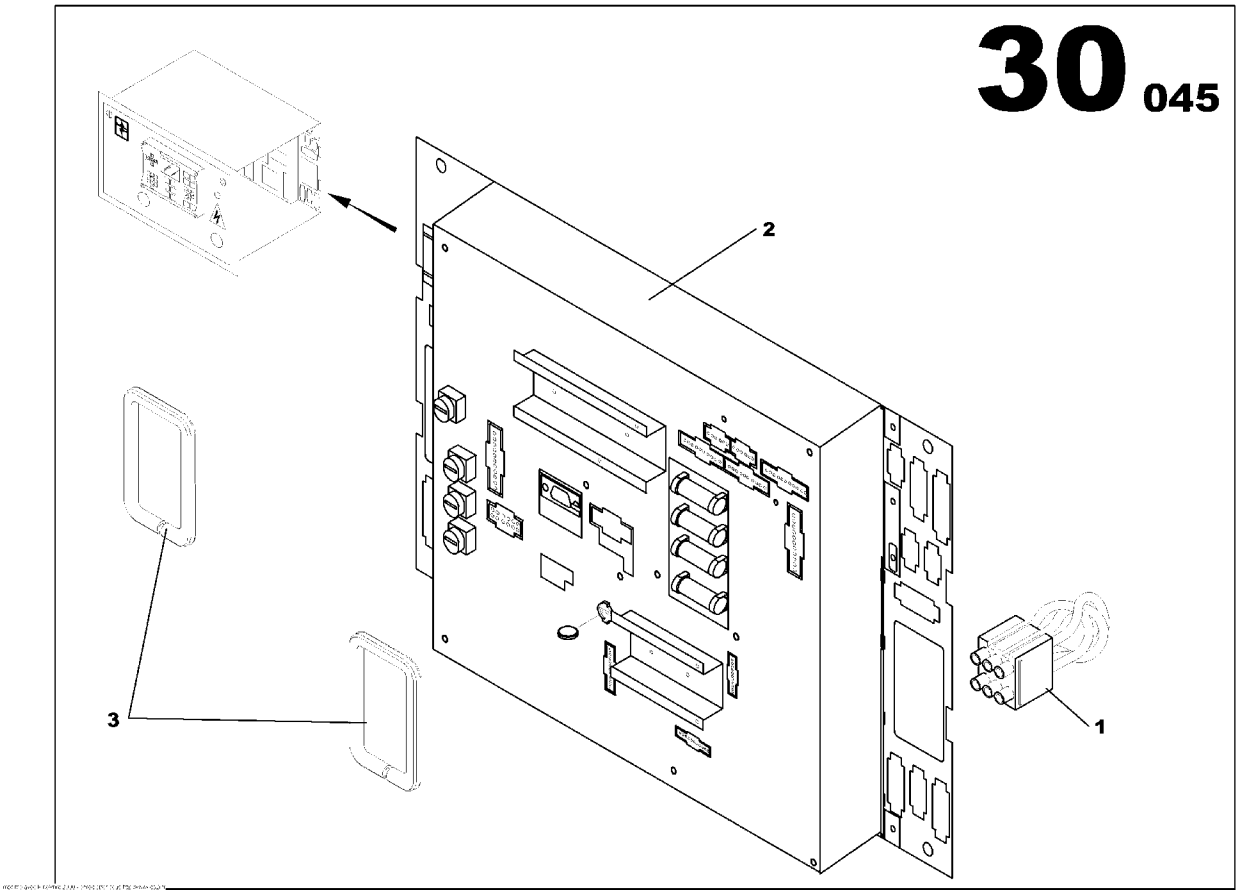

TELYS OPTION CB CARD
85411569

Part numbers listed are only parts used in this model

Item	Part No.	Description	Qty	Un	From SN	To SN	Order PN	Page
1	85504033	WIRING LOOM C35S	1	UN			85504033	
2	85636991	TELYS CARD CB12 *-1.10G*	1	UN	04000934		85636991	141
3	85630515	LINEAR SEAL	0.2	ML			85630515	

TELYS CARD CB12

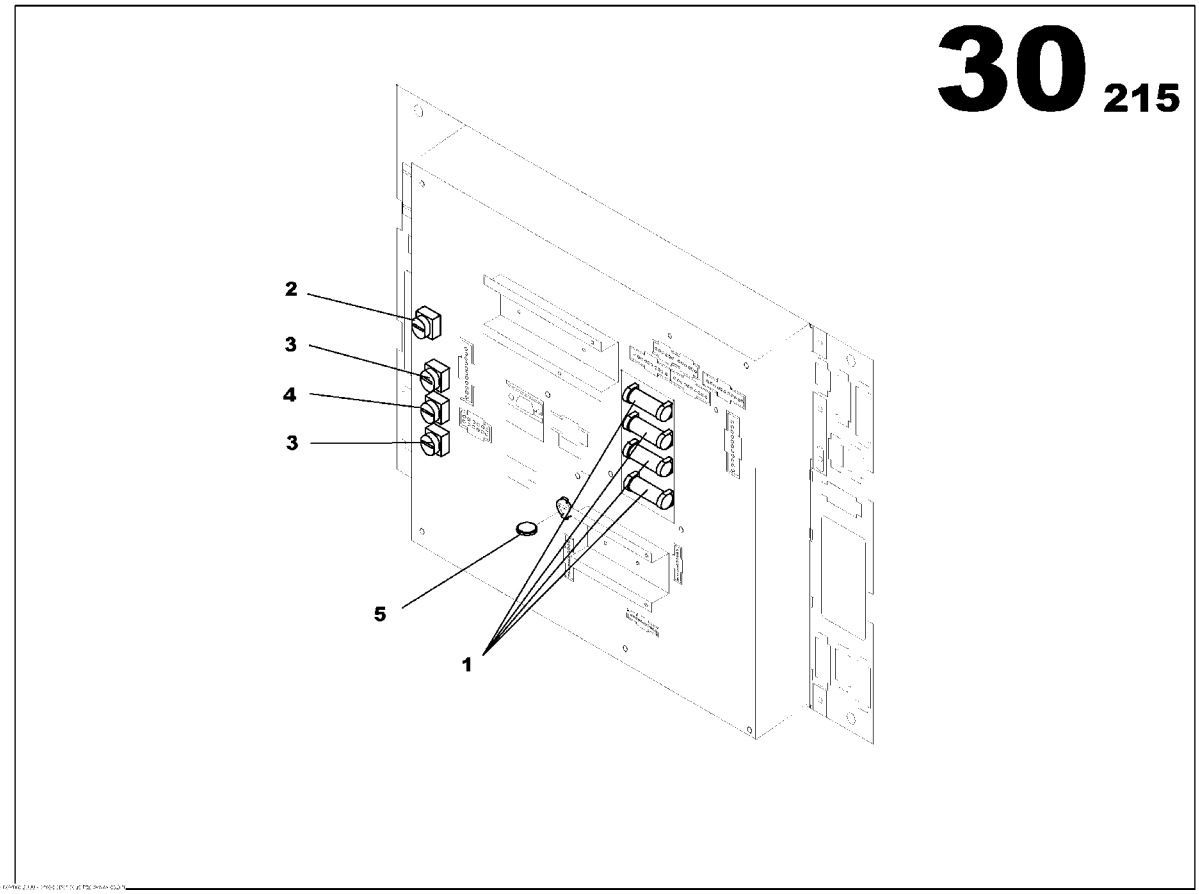

TELYS CARD CB12
85636991

Part numbers listed are only parts used in this model

Item	Part No.	Description	Qty	Un	From SN	To SN	Order PN	Page
1	85426112	FUSE CYLINDRICAL 12.5A	4	UN			85426112	
2	85426120	FUSE CYLINDRICAL 10A	1	UN			85426120	
3	85426138	FUSE CYLINDRICAL 1A	2	UN			85426138	
4	85426146	FUSE CYLINDRICAL 2,5A	1	UN			85426146	
5	85505154	CR2032 CELL	1	UN			85505154	

ELECTRIC PACK OPTION

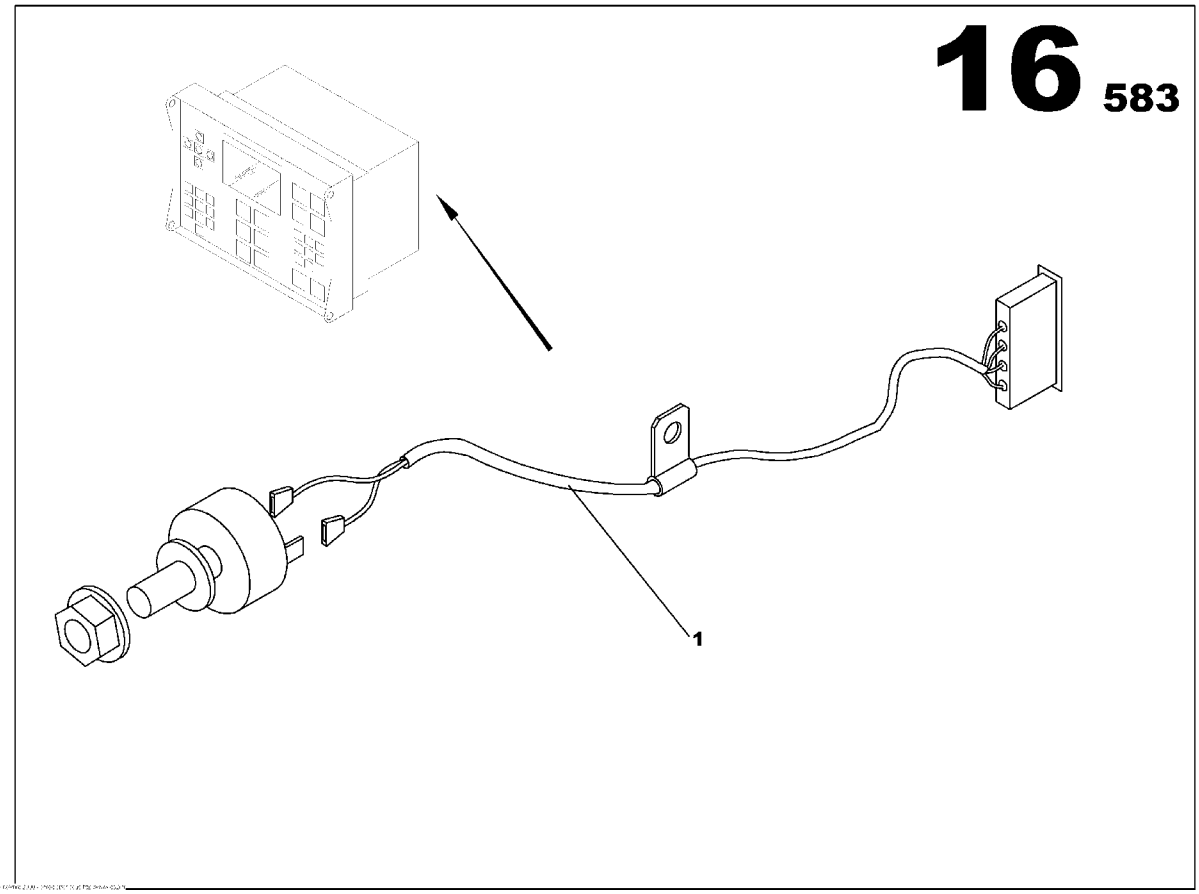

ELECTRIC PACK OPTION
17133174

Part numbers listed are only parts used in this model

Item	Part No.	Description	Qty	Un	From SN	To SN	Order PN	Page
1	85636140	VOLTAGE POTENTIOMETER OPTION	1	UN			85636140	145

VOLTAGE POTENTIOMETER OPTION

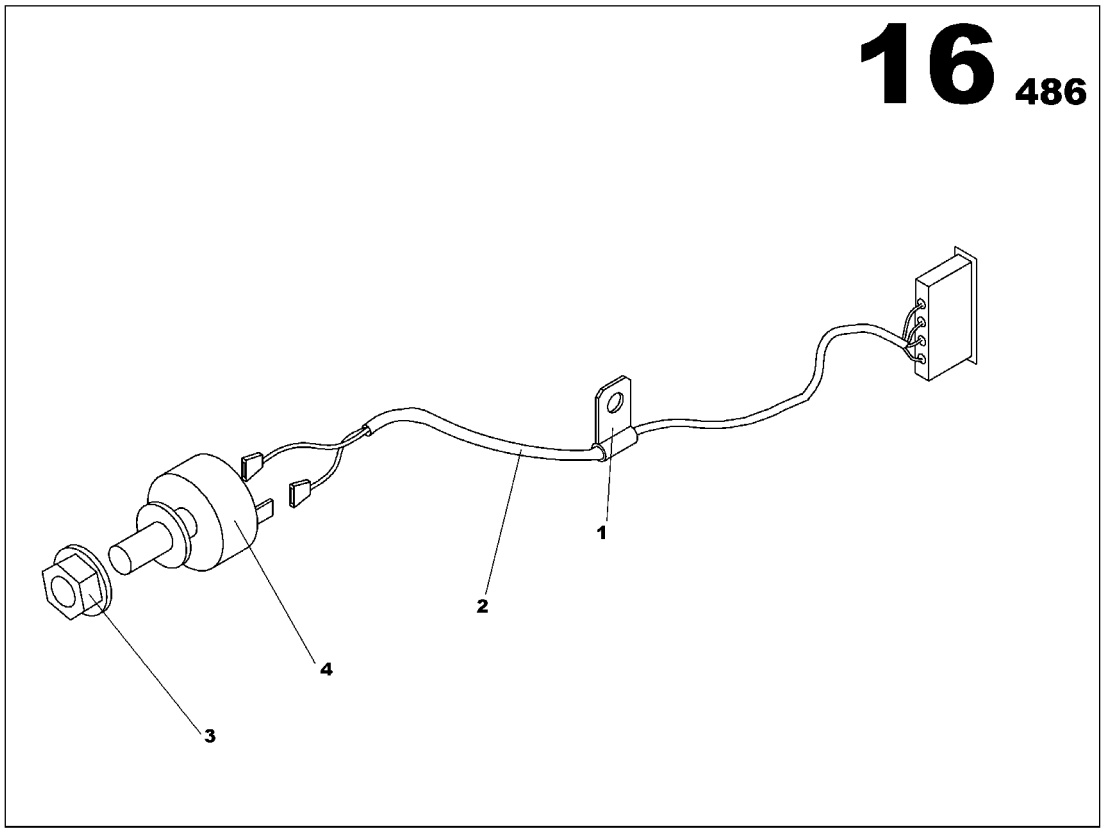

VOLTAGE POTENTIOMETER OPTION
85636140

Part numbers listed are only parts used in this model

Item	Part No.	Description	Qty	Un	From SN	To SN	Order PN	Page
1	85504207	CLAMP D4.7	1	UN			85504207	
2	85636959	TELYS WIRING LOOM 031	1	UN			85636959	
3	85504215	LOCK AXE SYSTEM	1	UN			85504215	
4	85504264	POTENTIOMETER 1kOHMS	1	UN			85504264	

EARTH LEAKAGE RELAY OPTION

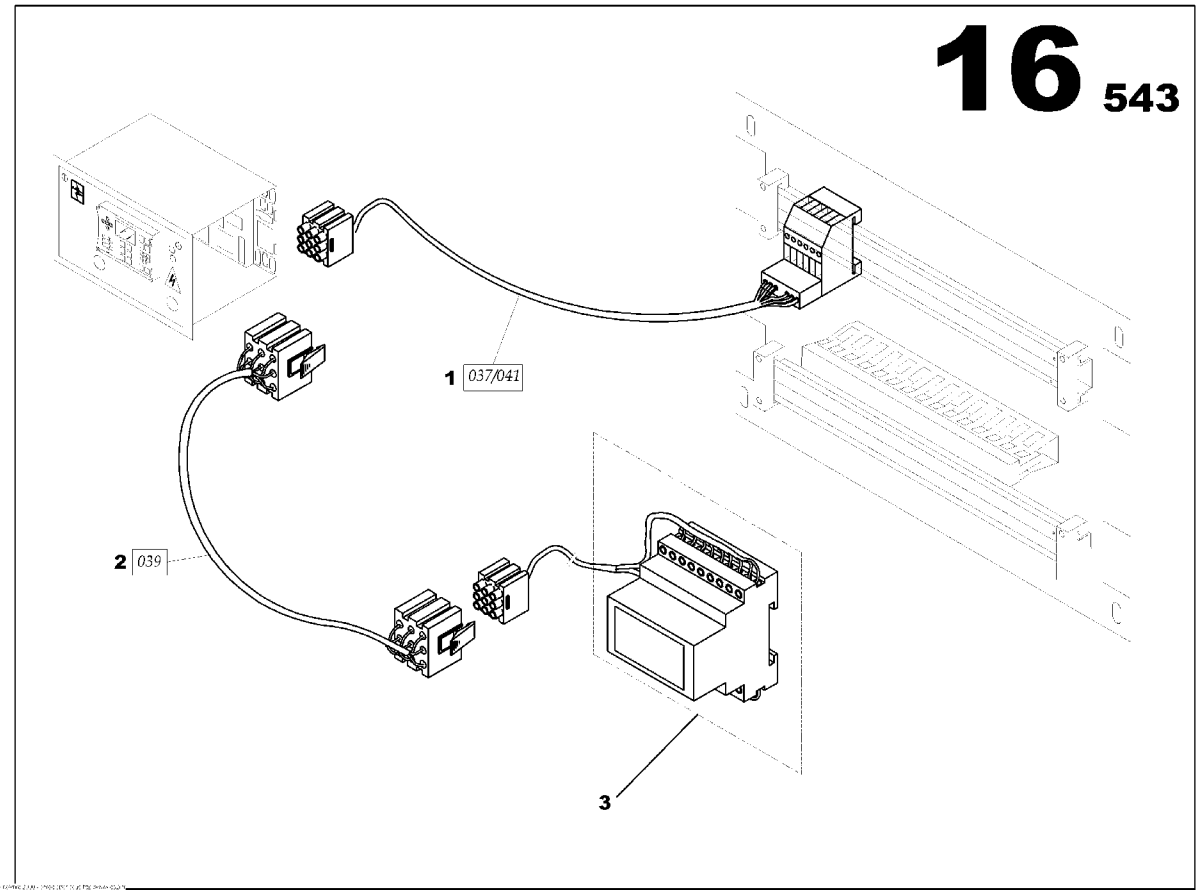

EARTH LEAKAGE RELAY OPTION
17130691

Part numbers listed are only parts used in this model

Item	Part No.	Description	Qty	Un	From SN	To SN	Order PN	Page
1	85636892	TELYS WIRING LOOM 037/041	1	UN			85636892	
2	85636942	TELYS WIRING LOOM 030	1	UN			85636942	
3	85504272	EARTH LEAKAGE 12V	1	UN			85504272	149

EARTH LEAKAGE 12V

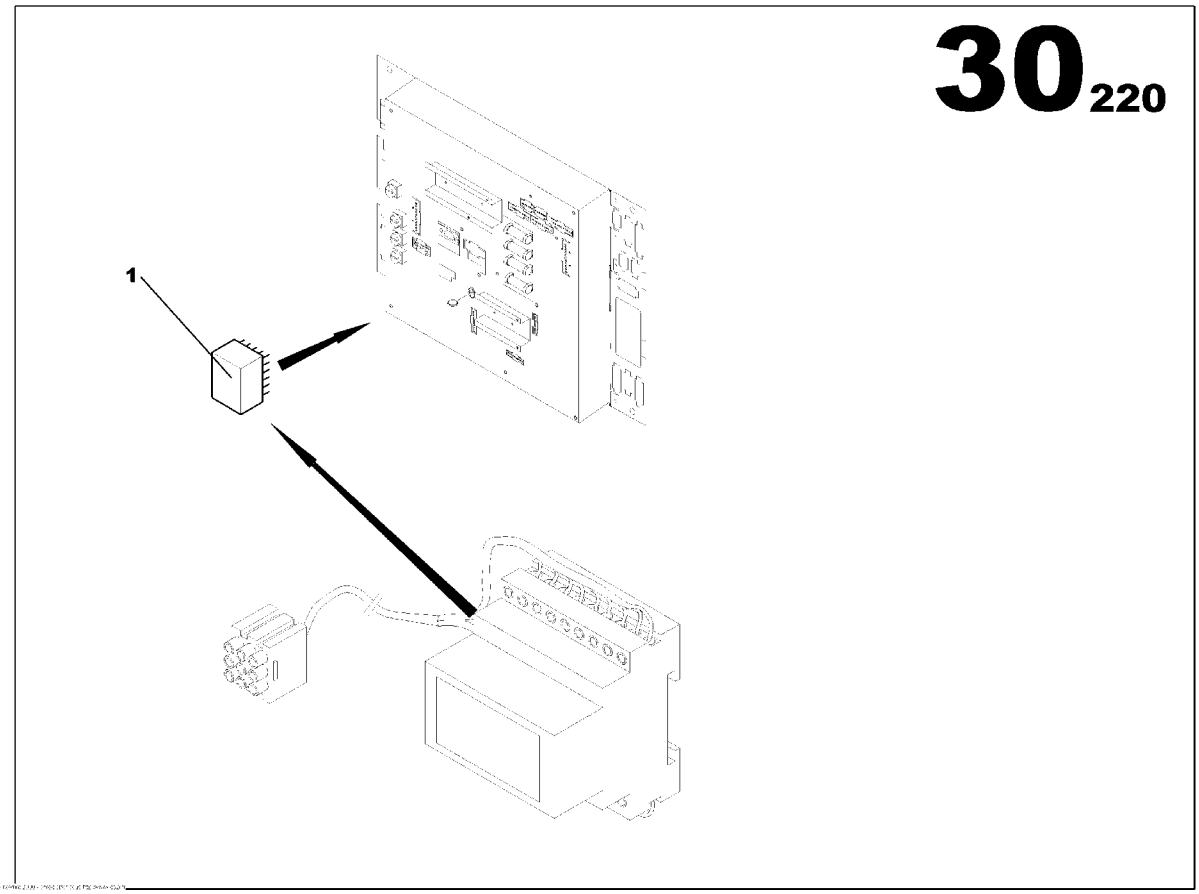

EARTH LEAKAGE 12V
85504272

Part numbers listed are only parts used in this model

Item	Part No.	Description	Qty	Un	From SN	To SN	Order PN	Page
1	85508570	RELAY CI 12V (RT2)	1	UN			85508570	

S3500 DASHBOARD OPTION

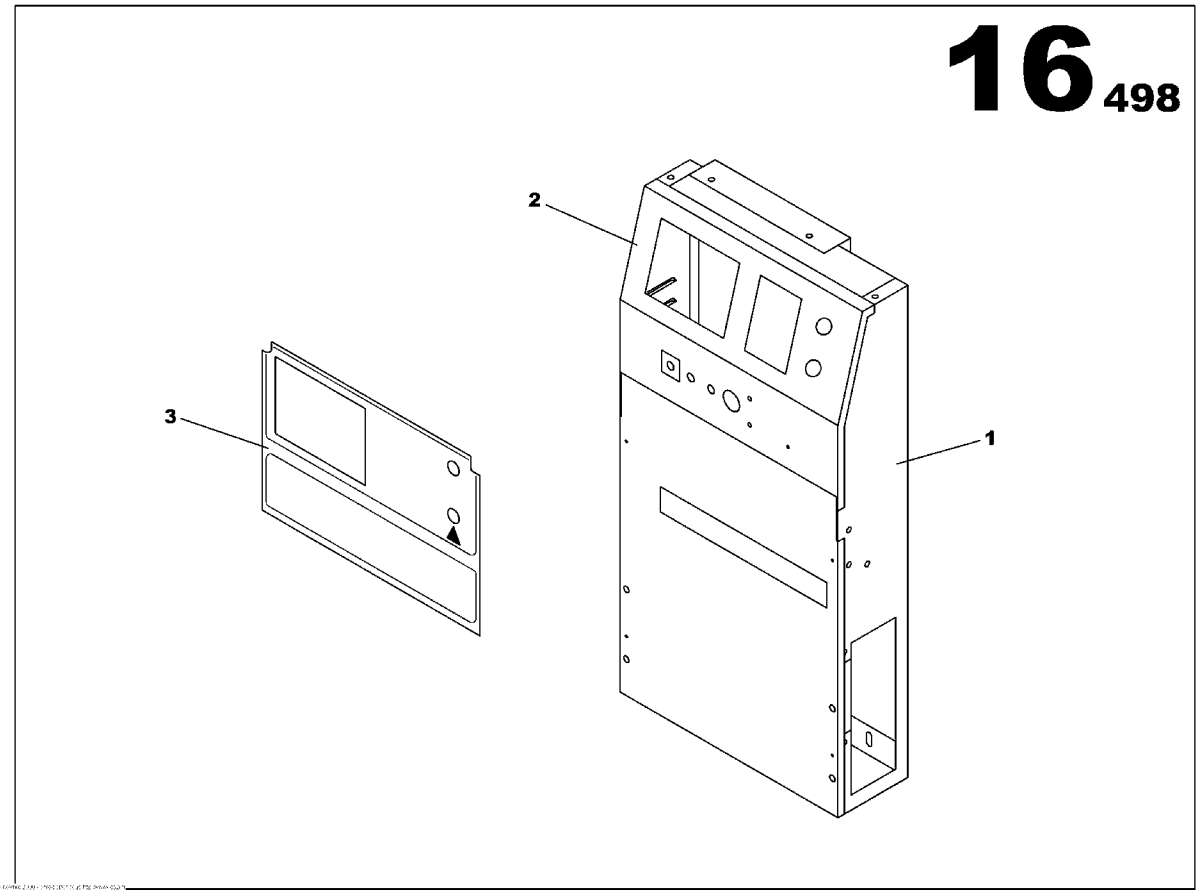

S3500 DASHBOARD OPTION
85636264

Part numbers listed are only parts used in this model

Item	Part No.	Description	Qty	Un	From SN	To SN	Order PN	Page
1	85634608	CONTROL PANEL SHEET METAL ASSEMBLY	1	UN			85634608	153
2	85636306	CONTROL PANEL ASSEMBLY	1	UN			85636306	155
3	85636603	PLASTIC PLATE L448xh310	1	UN			85636603	

CONTROL PANEL SHEET METAL ASSEMBLY

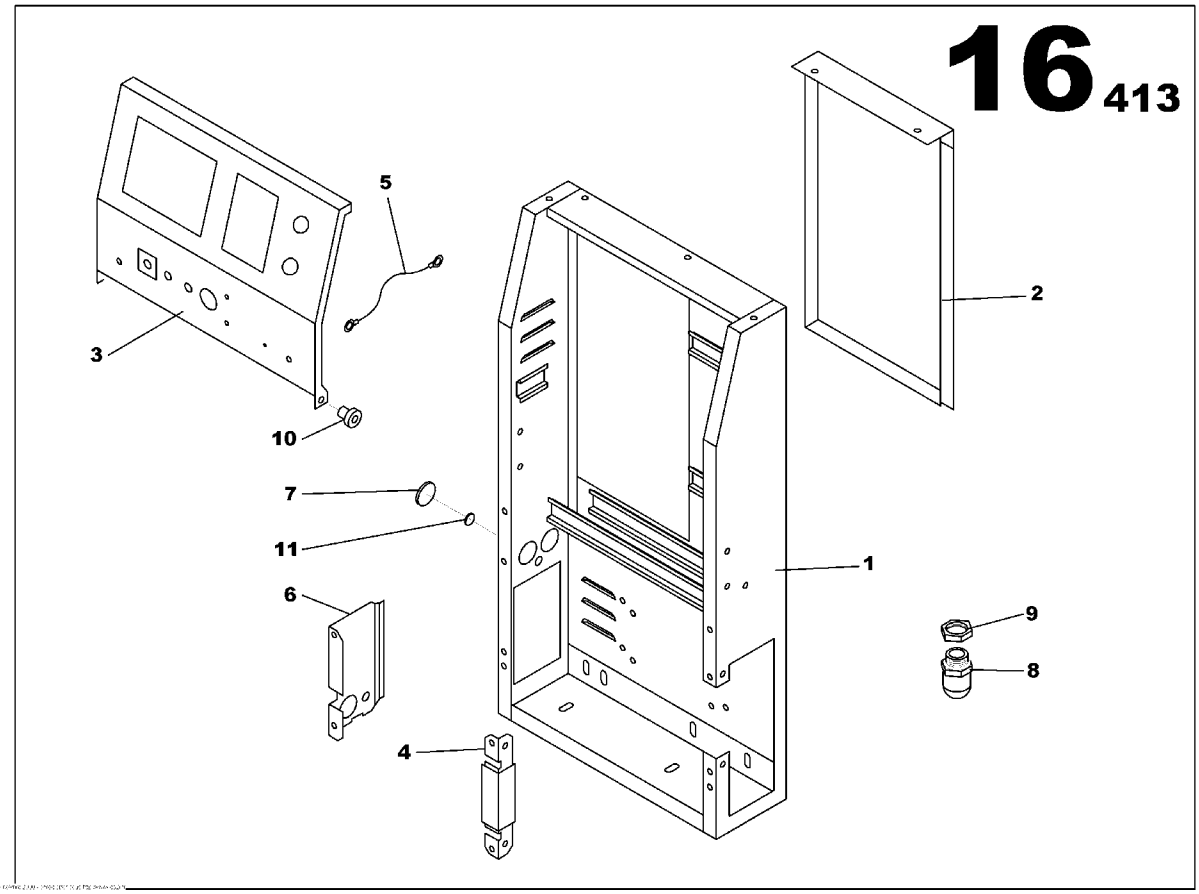

CONTROL PANEL SHEET METAL ASSEMBLY
85634608

Part numbers listed are only parts used in this model

Item	Part No.	Description	Qty	Un	From SN	To SN	Order PN	Page
1	85634509	CONTROL PANEL S3500 HOUSING	1	UN			85634509	
2	85634517	REAR CLOSURE PANEL S3500 CONTROL PANEL	1	UN			85634517	
3	85634533	FRONT PANEL S3500	1	UN			85634533	
4	85634574	SUPPORT PANEL S3500 CONTROL PANEL	1	UN			85634574	
5	85634582	COVER STOP CONTROL PANEL S3500	2	UN			85634582	
6	85634764	CABLE OUTLET PLATE	1	UN			85634764	
7	85408391	RUBBER GROMMET D47	3	UN			85408391	
8	85635894	GLAND NUT PG13	1	UN			85635894	
9	85635902	PG13 NUT	1	UN			85635902	
10	85636660	SLEAVE BEARING	2	UN			85636660	
11	85636694	RUBBER GROMMET D15	1	UN			85636694	

CONTROL PANEL ASSEMBLY

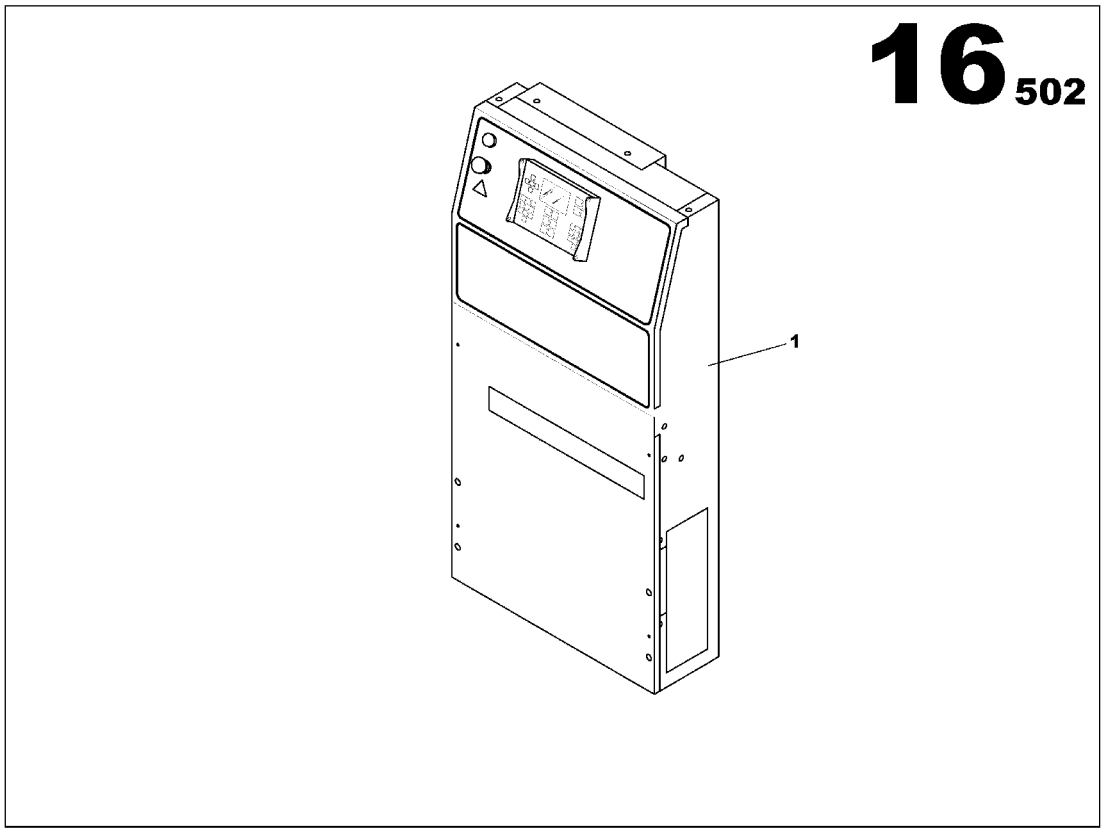

CONTROL PANEL ASSEMBLY
85636306

Part numbers listed are only parts used in this model

Item	Part No.	Description	Qty	Un	From SN	To SN	Order PN	Page
1	85636264	S3500 DASHBOARD OPTION	1	UN			85636264	157

S3500 DASHBOARD OPTION

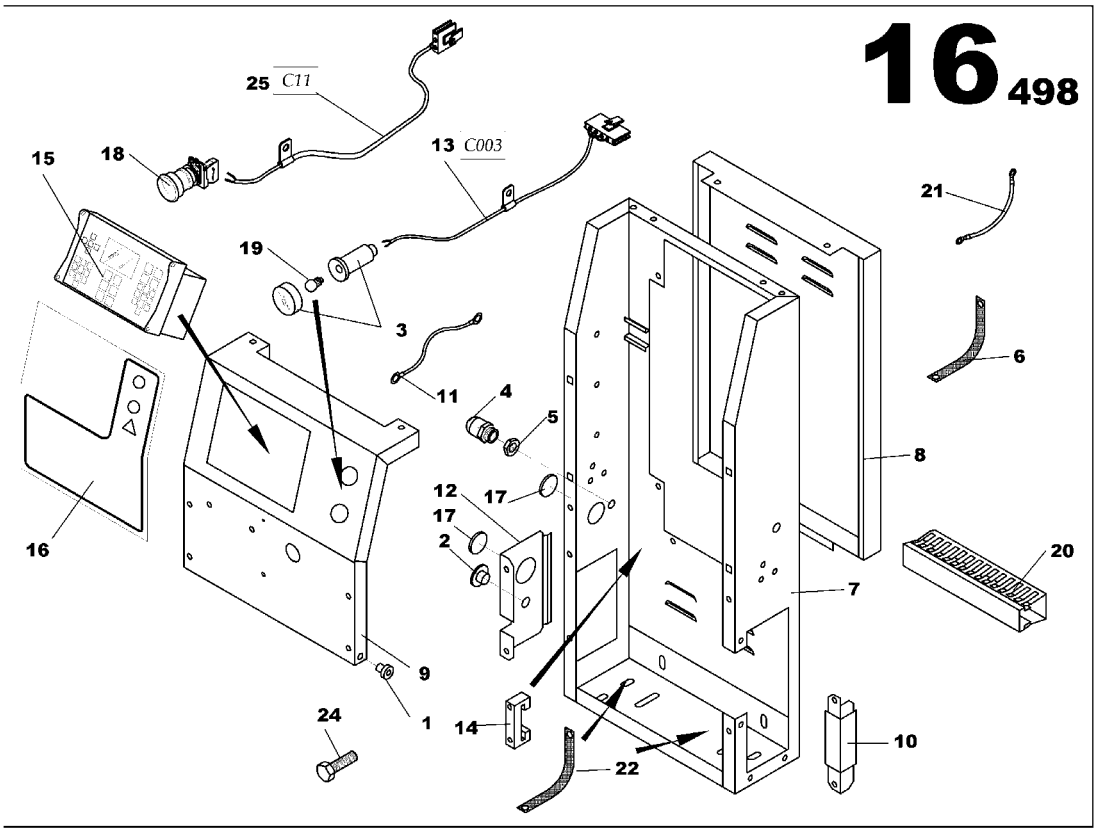

S3500 DASHBOARD OPTION
85636264

Part numbers listed are only parts used in this model

Item	Part No.	Description	Qty	Un	From SN	To SN	Order PN	Page
1	85636660	SLEAVE BEARING	2	UN			85636660	
2	17135476	PLUG	1	UN			17135476	
3	85503522	PANEL LIGHT CYLINDRIC D22	1	UN			85503522	
4	85408615	GLAND NUT PG13	1	UN			85408615	
5	85408656	GLAND NUT SCREW PG13	1	UN			85408656	
6	85504199	GROUND WIRES 10mm2 L :200mm	1	UN			85504199	
7	85634509	CONTROL PANEL S3500 HOUSING	1	UN			85634509	
8	85634517	REAR CLOSURE PANEL S3500 CONTROL PANEL	1	UN			85634517	
9	85634533	FRONT PANEL S3500	1	UN			85634533	
10	85634574	SUPPORT PANEL S3500 CONTROL PANEL	1	UN			85634574	
11	85634582	COVER STOP CONTROL PANEL S3500	2	UN			85634582	
12	85634764	CABLE OUTLET PLATE	1	UN			85634764	
13	85504017	TELYS WIRING LOOM 003	1	UN			85504017	
14	85408854	STOP	4	UN			85408854	
15	17133687	INTELLISYSTM DISPLAY *-IR PLATE SOFT 1.3*	1	UN	04002946		17133687	159
15	85627495	INTELLISYSTM DISPLAY *-IR PLATE WITH COVER SOFT 1.2*	1	UN	0	04002945	17133687	161
16	85636603	PLASTIC PLATE L448xh310	1	UN			85636603	
17	85408391	RUBBER GROMMET D47	3	UN			85408391	
18	85631422	EMERGENCY STOP BUTTON	1	UN			85631422	
19	85402519	LAMP 12V BA9S TYPE	1	UN			85402519	
20	17135484	CONNECTING TERMINAL	1	UN			17135484	
21	85490100	EARTHING CABLE D8xD8 6mm2 L200 Gr/Ye	1	UN			85490100	
22	85505543	GROUND WIRES 16mm2	2	UN			85505543	
24	85636389	SCREW H M6x16	14	UN			85636389	
25	85503977	WIRING LOOM C11 L2000	1	UN			85503977	

INTELLISYSTM DISPLAY

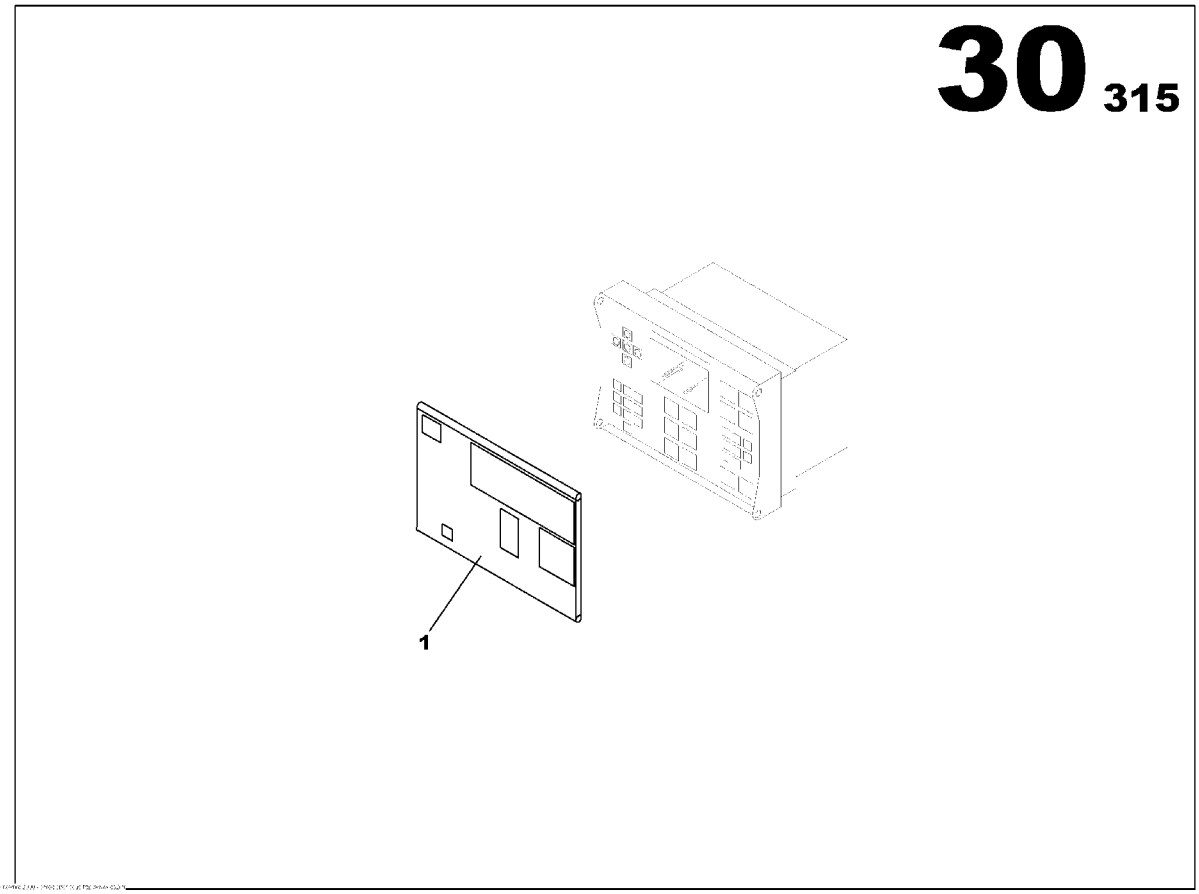

INTELLISYSTM DISPLAY
17133687

Part numbers listed are only parts used in this model

Item	Part No.	Description	Qty	Un	From SN	To SN	Order PN	Page
1	85626828	TELYS DISPLAY COVER	1	UN			85626828	

INTELLISYSTM DISPLAY

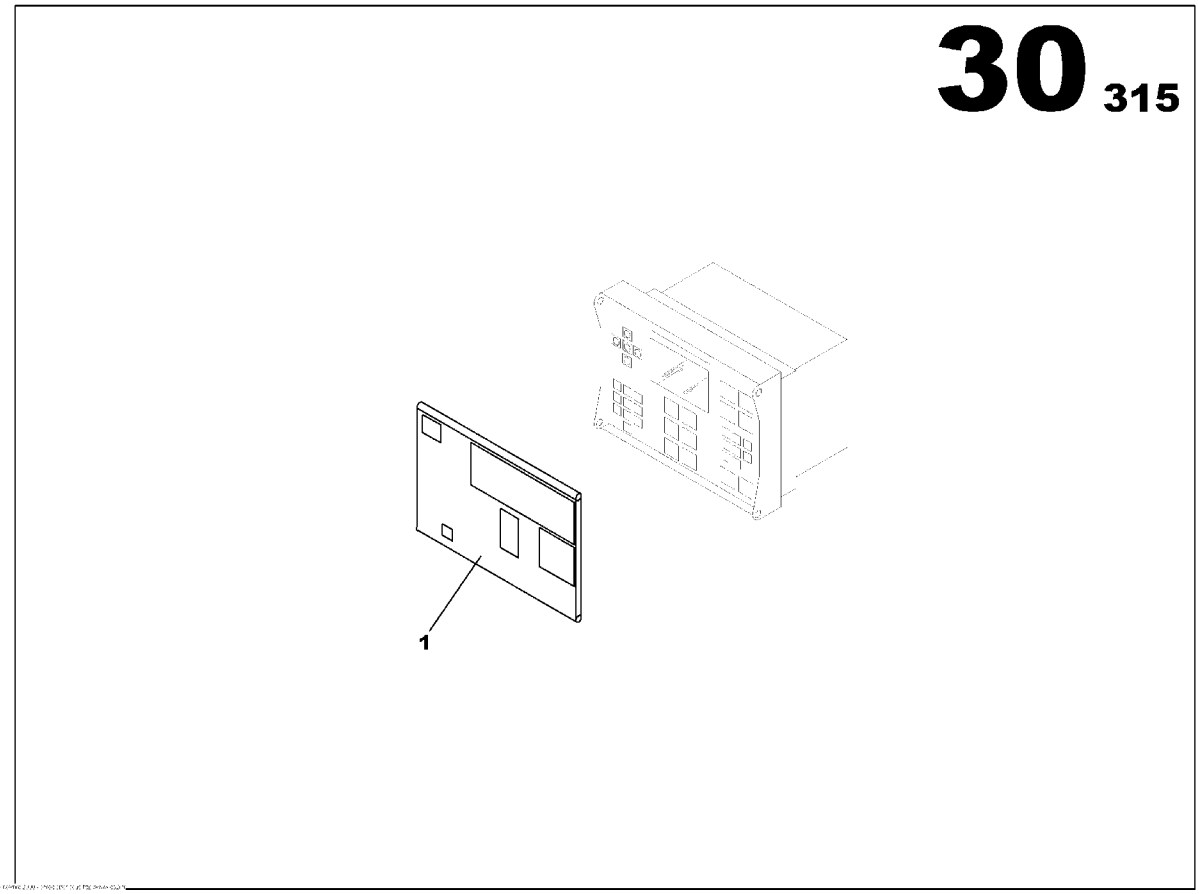

INTELLISYSTM DISPLAY
17133687

Part numbers listed are only parts used in this model

Item	Part No.	Description	Qty	Un	From SN	To SN	Order PN	Page
1	85626828	TELYS DISPLAY COVER	1	UN			85626828	

WIRING LOOM FUNCTION

Non illustré
Not illustrated

WIRING LOOM FUNCTION

Part numbers listed are only parts used in this model

Item	Part No.	Description	Qty	Un	From SN	To SN	Order PN	Page
1	17132846	TELYS 020 WIRING LOOM ASSEMBLY JD 6081	1	UN			17132846	165
2	85635415	TELYS 035 WIRING LOOM ASSEMBLY JD 6081	1	UN			85635415	167

TELYS 020 WIRING LOOM ASSEMBLY JD 6081

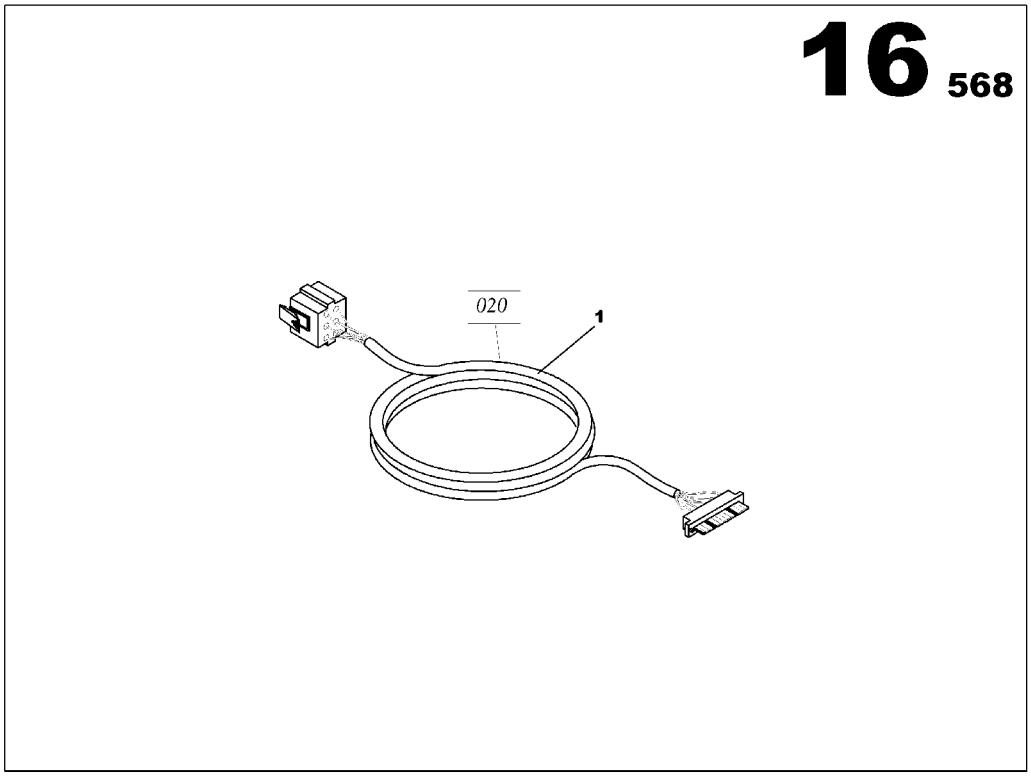

TELYS 020 WIRING LOOM ASSEMBLY JD 6081
17132846

Part numbers listed are only parts used in this model

Item	Part No.	Description	Qty	Un	From SN	To SN	Order PN	Page
1	85410942	TELYS WIRING LOOM 020	1	UN			85410942	

TELYS 035 WIRING LOOM ASSEMBLY JD 6081

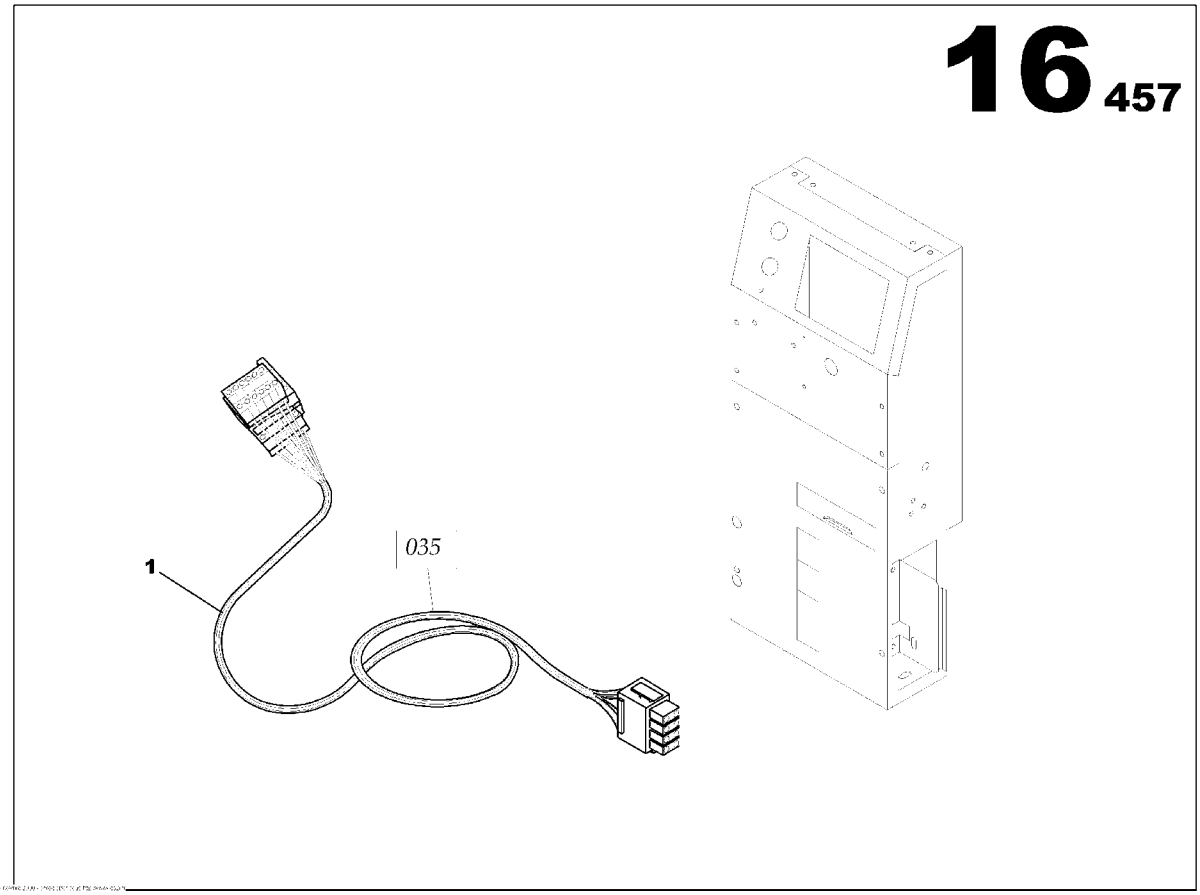

TELYS 035 WIRING LOOM ASSEMBLY JD 6081
85635415

Part numbers listed are only parts used in this model

Item	Part No.	Description	Qty	Un	From SN	To SN	Order PN	Page
1	85635308	TELYS WIRING LOOM 035	1	UN	02010280		85635308	

ELECTRIC SUPPLY FUNCTION

Non illustré
Not illustrated

ELECTRIC SUPPLY FUNCTION

Part numbers listed are only parts used in this model

Item	Part No.	Description	Qty	Un	From SN	To SN	Order PN	Page
1	17132564	AIPR ASSEMBLY	1	UN			17132564	171
2	17132630	AIPR ACCESSORY ASSEMBLY	1	UN			17132630	
3	17132705	AIPR 250A ASSEMBLY	1	UN			17132705	177
4	17132739	ELECTRIC CONNECTION 250A ASSEMBLY	1	UN			17132739	191
5	17132853	x	1	UN			17132853	195
6	17133083	RELEASE COIL ASSEMBLY	1	UN			17133083	199

AIPR ASSEMBLY

Non illustré
Not illustrated

AIPR ASSEMBLY
17132564

Part numbers listed are only parts used in this model

Item	Part No.	Description	Qty	Un	From SN	To SN	Order PN	Page
1	17132556	AIPR ASSEMBLY	1	UN			17132556	173

AIPR ASSEMBLY

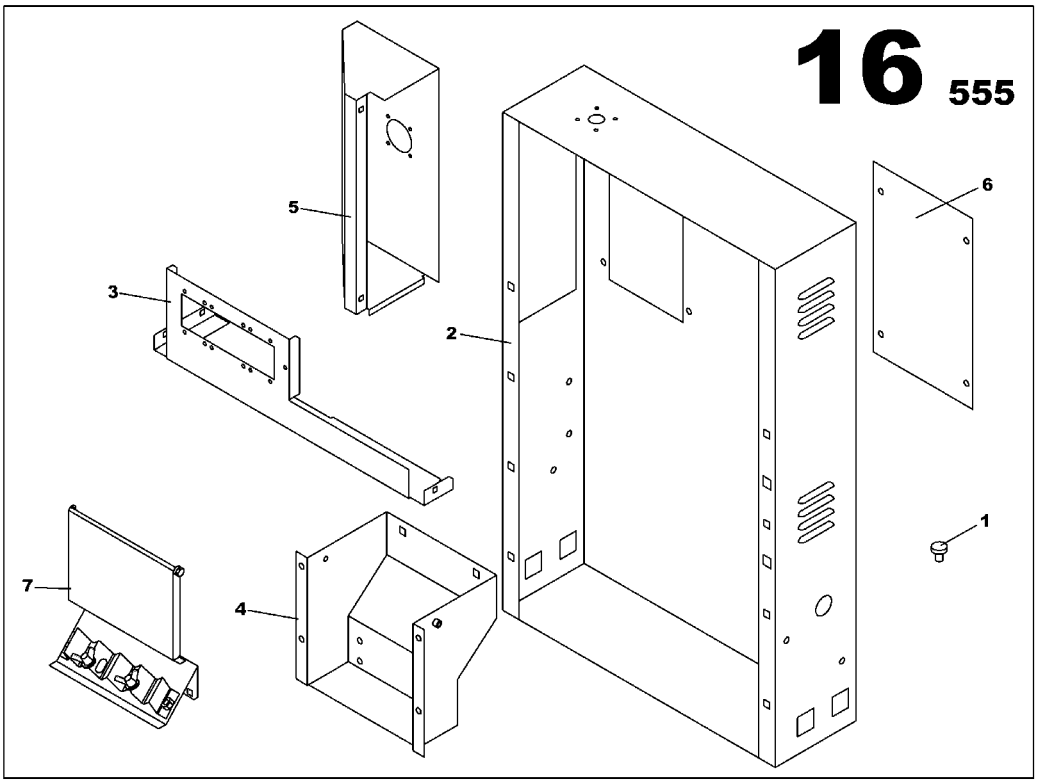

AIPR ASSEMBLY
17132556

Part numbers listed are only parts used in this model

Item	Part No.	Description	Qty	Un	From SN	To SN	Order PN	Page
1	17132176	PLUG D8	8	UN			17132176	
2	17132432	CIRCUIT BREAKER HOUSING	1	UN			17132432	
2	17132432	CIRCUIT BREAKER HOUSING	1	UN			17132432	
3	17132440	SEPARATING PANEL	1	UN			17132440	
4	17132473	CABLE PASSAGE PANEL M405	1	UN			17132473	
5	17132515	CABLE HOUSING	1	UN			17132515	
6	17132523	CABLE AIPR CLOSURE PANEL	1	UN			17132523	
6	17132523	CABLE AIPR CLOSURE PANEL	1	UN			17132523	
7	17132572	BRACKET CABLE COLLAR AIPR ASSEMBLY	1	UN			17132572	175

BRACKET CABLE COLLAR AIPR ASSEMBLY

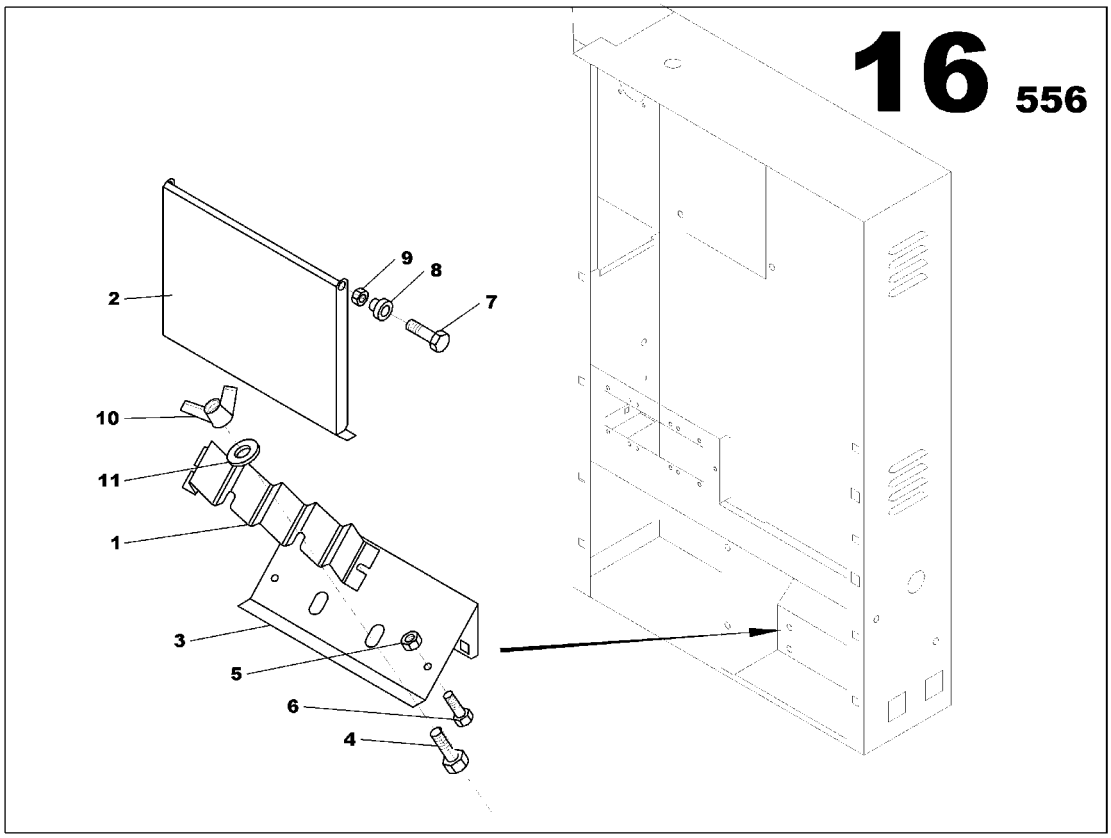

BRACKET CABLE COLLAR AIPR ASSEMBLY
17132572

Part numbers listed are only parts used in this model

Item	Part No.	Description	Qty	Un	From SN	To SN	Order PN	Page
1	17132465	CABLE AIPR BRACKET	1	UN			17132465	
2	17132499	SHEET	1	UN			17132499	
3	17132507	CABLE COLLAR AIPR BRACKET	1	UN			17132507	
4	85429744	SCREW H M8x25	2	UN			85429744	
5	17133240	NUT M8	2	UN			17133240	
6	85636389	SCREW H M6x16	2	UN			85636389	
7	17133257	SCREW	2	UN			17133257	
8	85636660	SLEAVE BEARING	2	UN			85636660	
9	17133653	NUT M6	2	UN			17133653	
10	85410140	WING NUT M8	2	UN			85410140	
11	85430213	WASHER 8x18	2	UN			85430213	

AIPR 250A ASSEMBLY

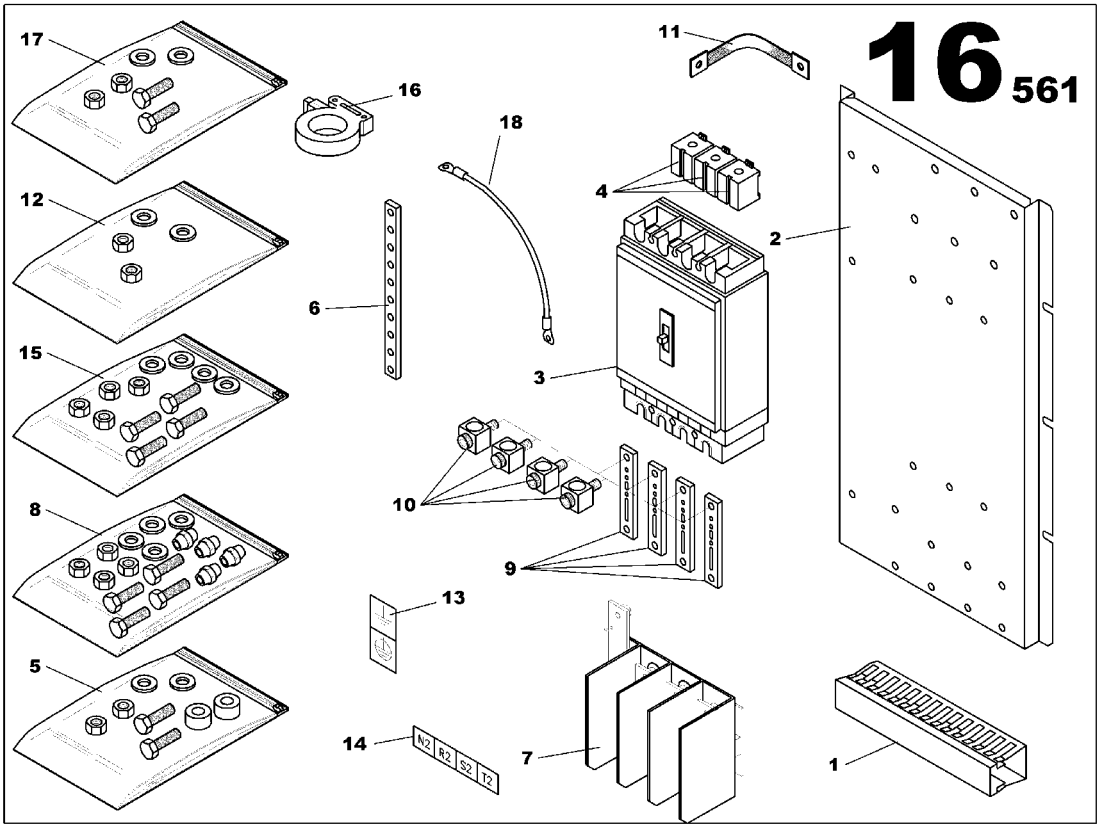

AIPR 250A ASSEMBLY
17132705

Part numbers listed are only parts used in this model

Item	Part No.	Description	Qty	Un	From SN	To SN	Order PN	Page
1	17133018	WIRING LOOM SUPPORT	0.5	ML			17133018	
2	17132697	CIRCUIT BREAKER AIPR BRACKET	1	UN			17132697	
3	85427938	COMPACT CIRCUIT BREAKER 4x250A	1	UN			85427938	
4	17133091	CURRENT TRANSFORMER 250/5	3	UN			17133091	
5	17133265	SCREWS MCPS AIPR ASSEMBLY	1	UN			17133265	179
6	17132416	COPPER BAR 5x25	1	UN			17132416	
7	17133117	SEPARATOR SCREEN ASSEMBLY	1	UN			17133117	181
8	17133299	SCREWS MCPS AIPR ASSEMBLY	1	UN			17133299	183
9	17133141	COPPER BAR 10x30	4	UN			17133141	
10	17133133	x	1	UN			17133133	
11	17132192	GROUND WIRES 16mm2	1	UN			17132192	
12	17133273	SCREWS MCPS AIPR ASSEMBLY	1	UN			17133273	185
13	85409084	STICKER EARTH SYMBOL	1	UN			85409084	
14	85409118	STICKER POWER LINK	1	UN			85409118	
15	17133281	SCREWS MCPS AIPR ASSEMBLY	1	UN			17133281	187
16	85635886	TORE	1	UN			85635886	
17	85636454	SCREWS ASSEMBLY	1	UN			85636454	189
18	17132879	NEUTRAL/EARTH SYSTEM CABLE 25mm2 Gr/Ye	1	UN			17132879	

SCREWS MCPS AIPR ASSEMBLY

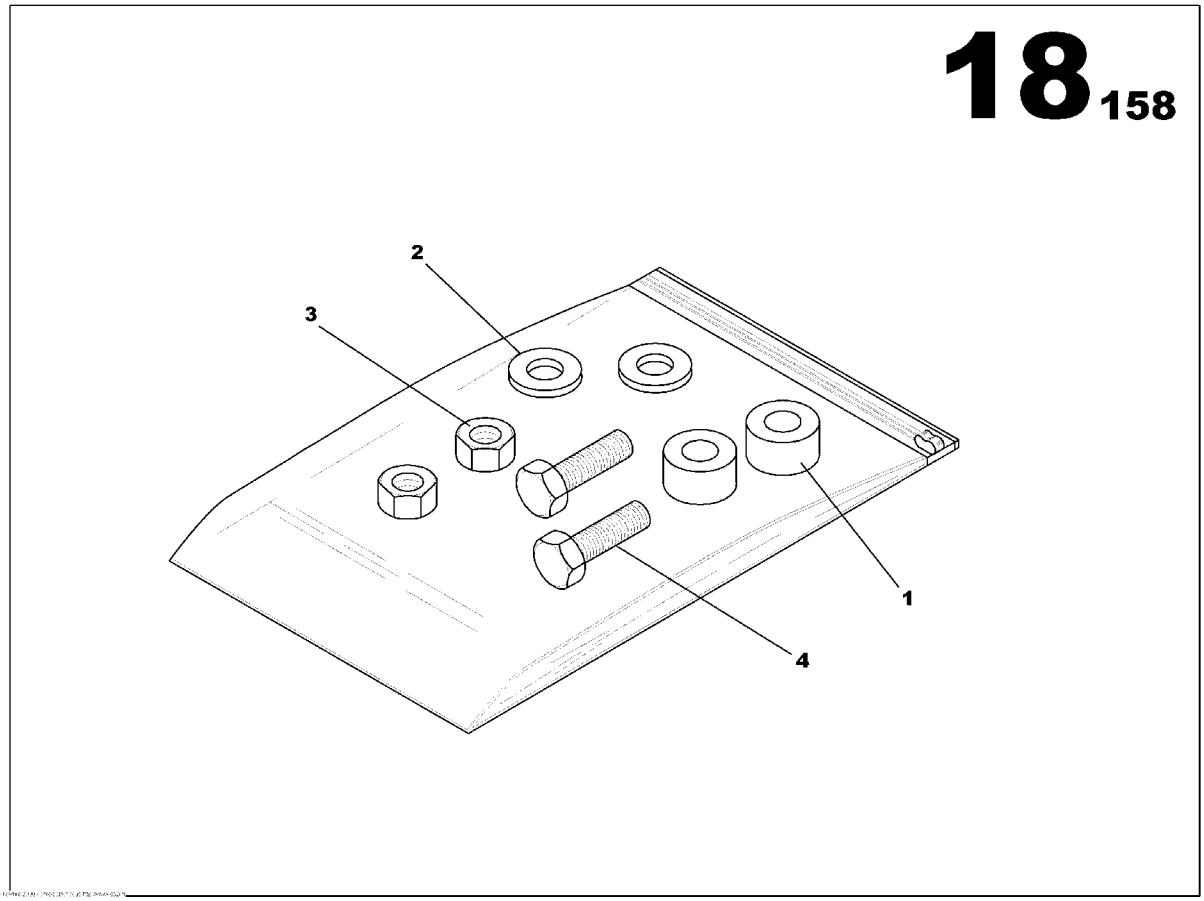

SCREWS MCPS AIPR ASSEMBLY
17133265

Part numbers listed are only parts used in this model

Item	Part No.	Description	Qty	Un	From SN	To SN	Order PN	Page
1	85639680	SPACER	2	UN			85639680	
2	85636736	WASHER 6x12	2	UN			85636736	
3	85507911	NUT M6	2	UN			85507911	
4	85636389	SCREW H M6x16	2	UN			85636389	

SEPARATOR SCREEN ASSEMBLY

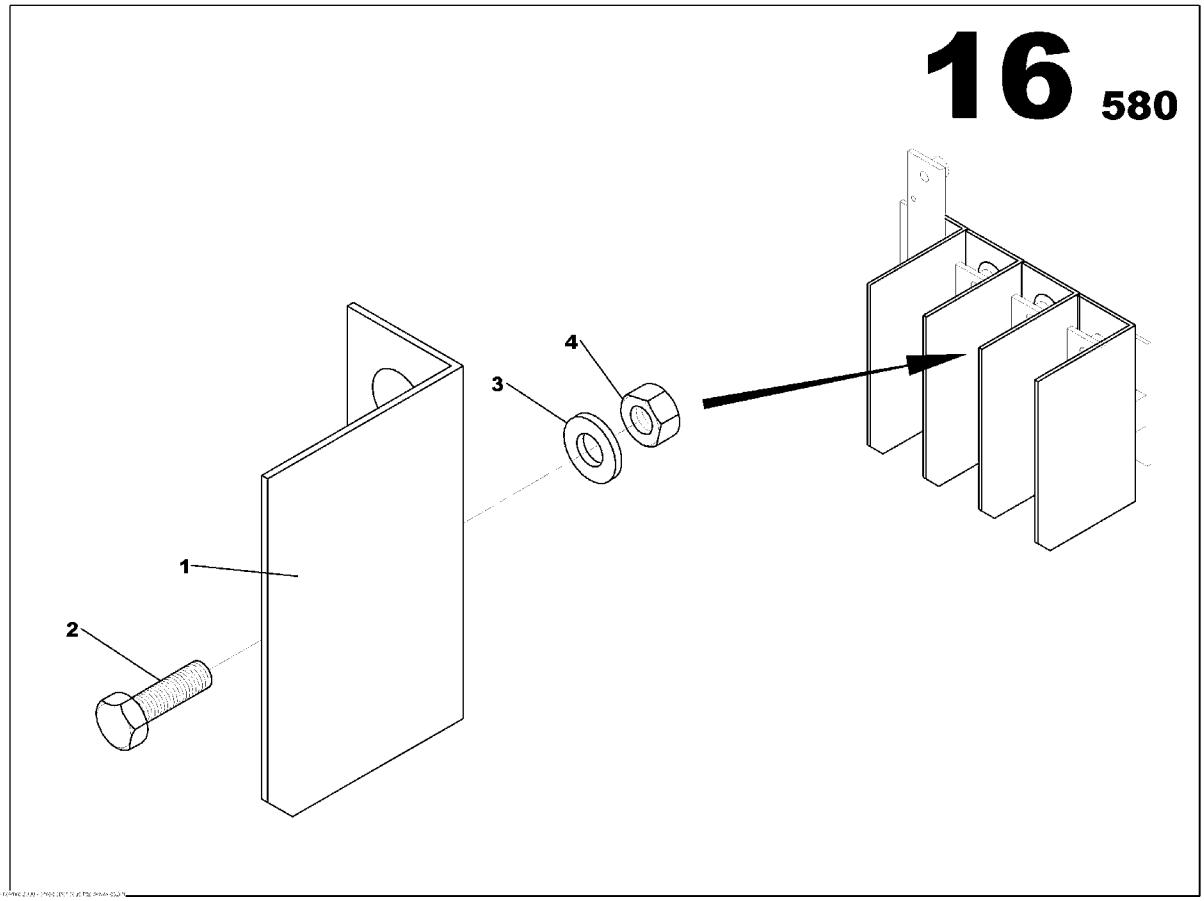

SEPARATOR SCREEN ASSEMBLY
17133117

Part numbers listed are only parts used in this model

Item	Part No.	Description	Qty	Un	From SN	To SN	Order PN	Page
1	17133109	PHASE ISOLATOR AIPR	4	UN			17133109	
2	85636389	SCREW H M6x16	4	UN			85636389	
3	85429793	WASHER 6x14	4	UN			85429793	
4	85507911	NUT M6	4	UN			85507911	

SCREWS MCPS AIPR ASSEMBLY

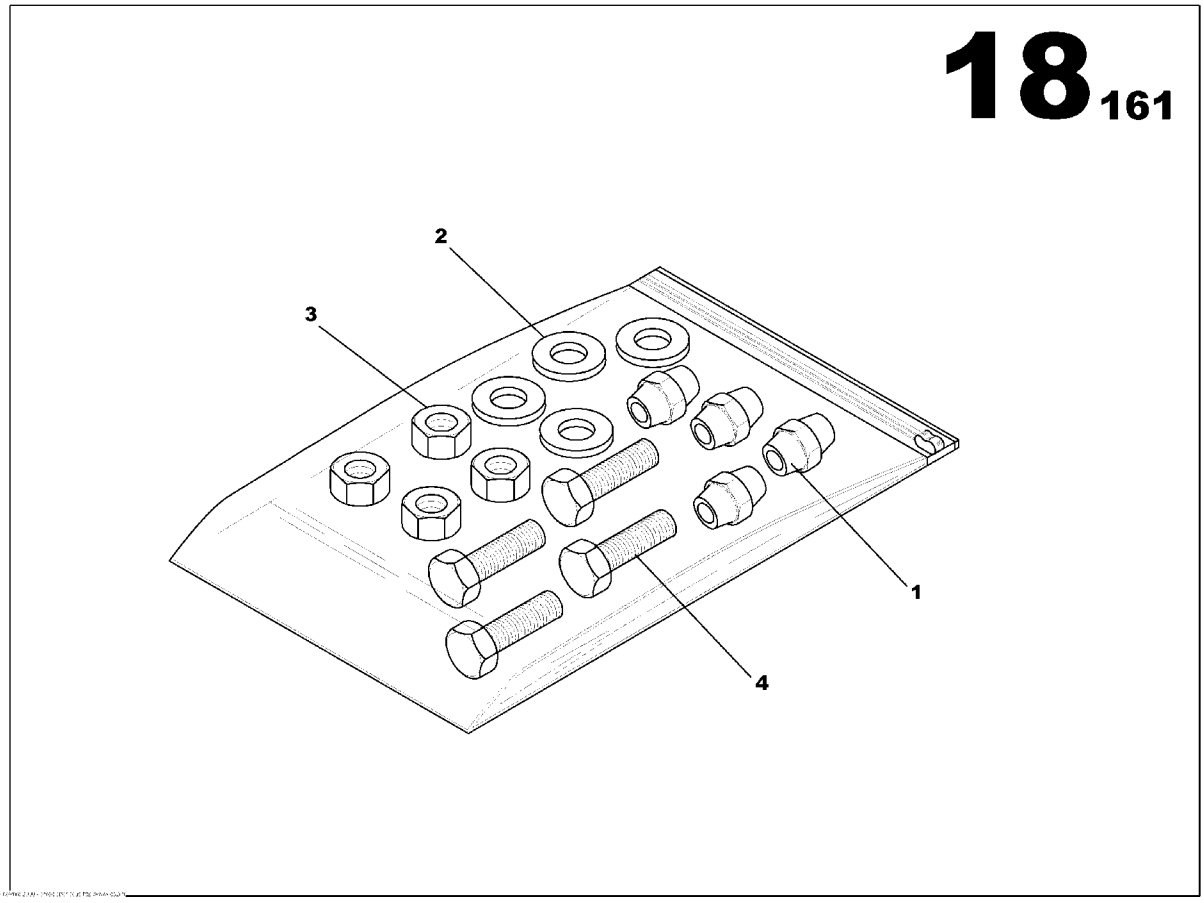

SCREWS MCPS AIPR ASSEMBLY
17133299

Part numbers listed are only parts used in this model

Item	Part No.	Description	Qty	Un	From SN	To SN	Order PN	Page
1	17133067	INSULATION PIN	4	UN			17133067	
2	85636736	WASHER 6x12	4	UN			85636736	
3	85507911	NUT M6	4	UN			85507911	
4	85636389	SCREW H M6x16	4	UN			85636389	

SCREWS MCPS AIPR ASSEMBLY

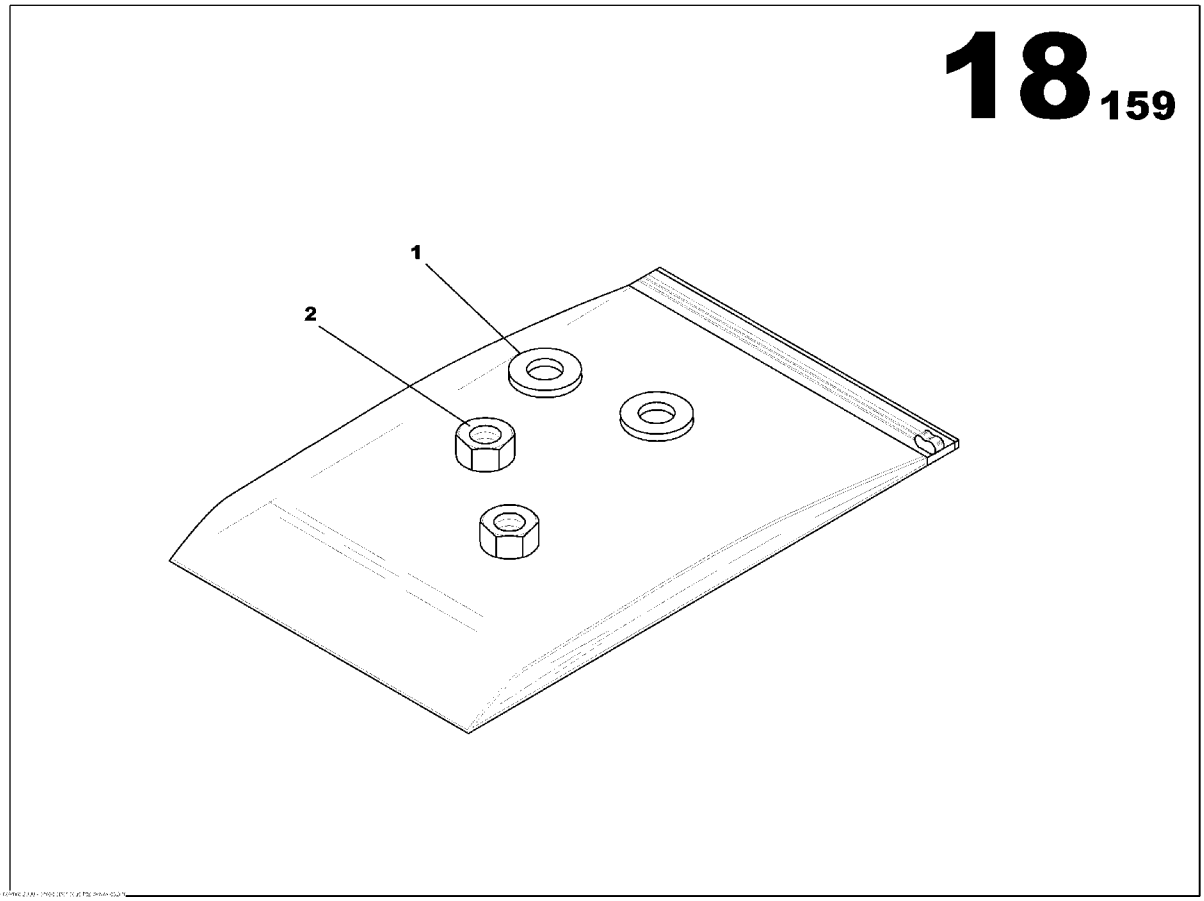

SCREWS MCPS AIPR ASSEMBLY
17133273

Part numbers listed are only parts used in this model

Item	Part No.	Description	Qty	Un	From SN	To SN	Order PN	Page
1	85636736	WASHER 6x12	2	UN			85636736	
2	85507911	NUT M6	2	UN			85507911	

SCREWS MCPS AIPR ASSEMBLY

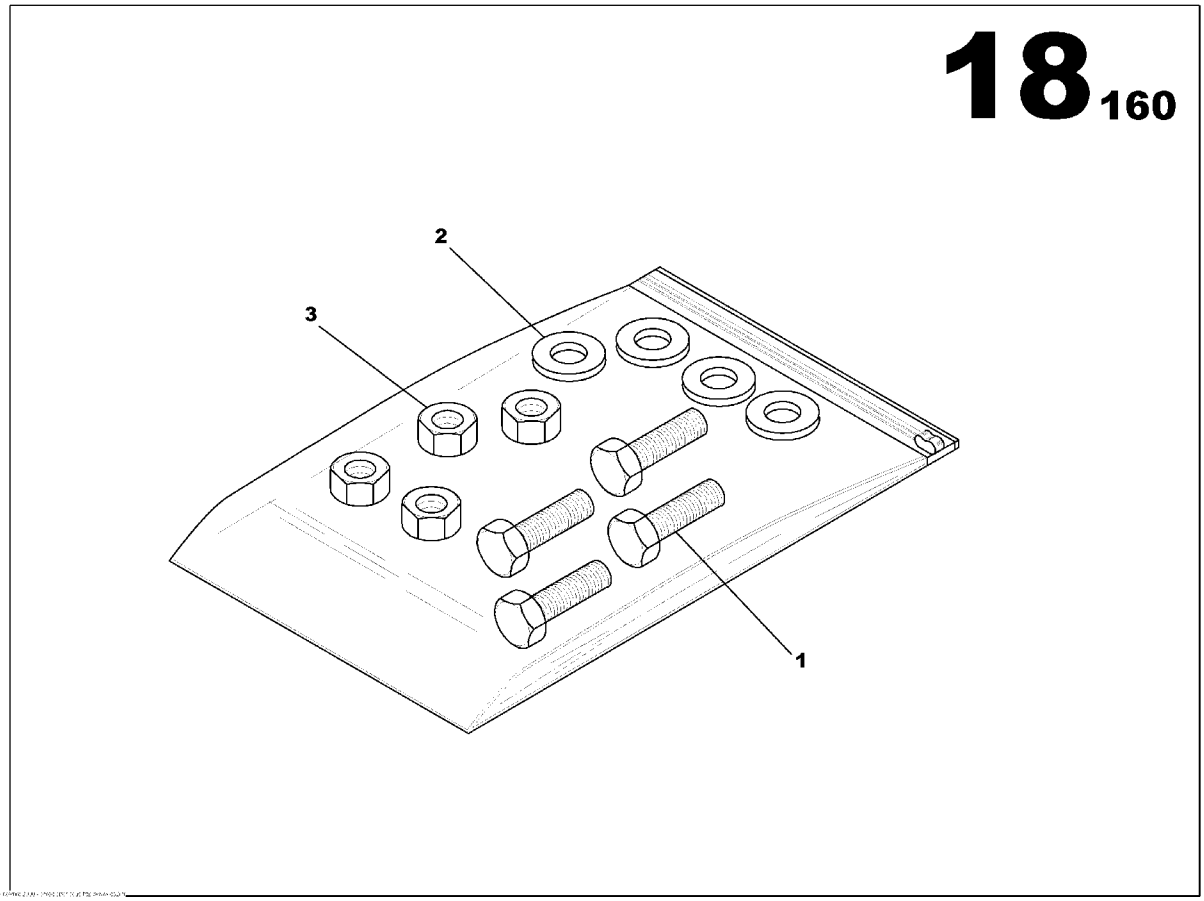

SCREWS MCPS AIPR ASSEMBLY
17133281

Part numbers listed are only parts used in this model

Item	Part No.	Description	Qty	Un	From SN	To SN	Order PN	Page
1	85636389	SCREW H M6x16	4	UN			85636389	
2	85636736	WASHER 6x12	4	UN			85636736	
3	85507911	NUT M6	4	UN			85507911	

SCREWS ASSEMBLY

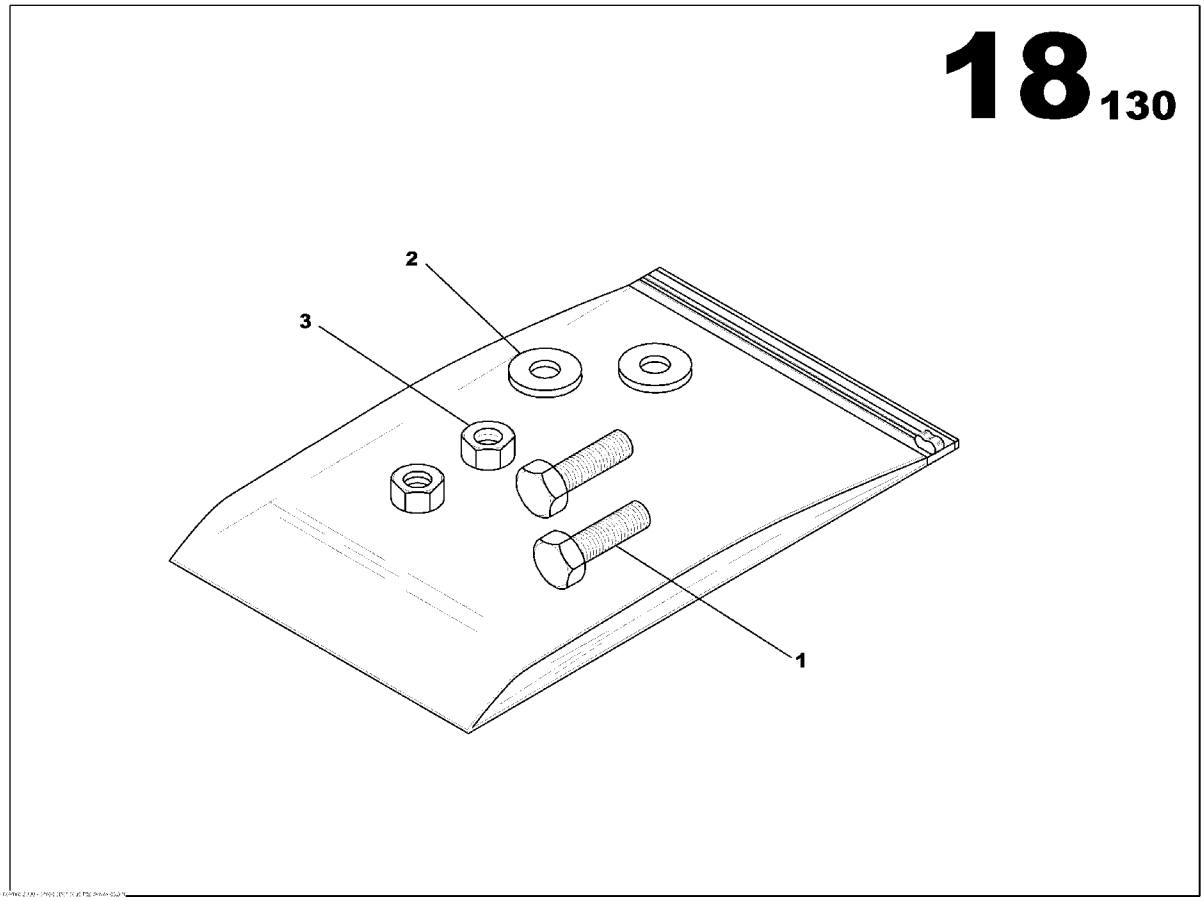

SCREWS ASSEMBLY
85636454

Part numbers listed are only parts used in this model

Item	Part No.	Description	Qty	Un	From SN	To SN	Order PN	Page
1	85636363	SCREW HS M4x16	2	UN			85636363	
2	85636728	WASHER 4x10	2	UN			85636728	
3	85429553	NUT M4	2	UN			85429553	

ELECTRIC CONNECTION 250A ASSEMBLY

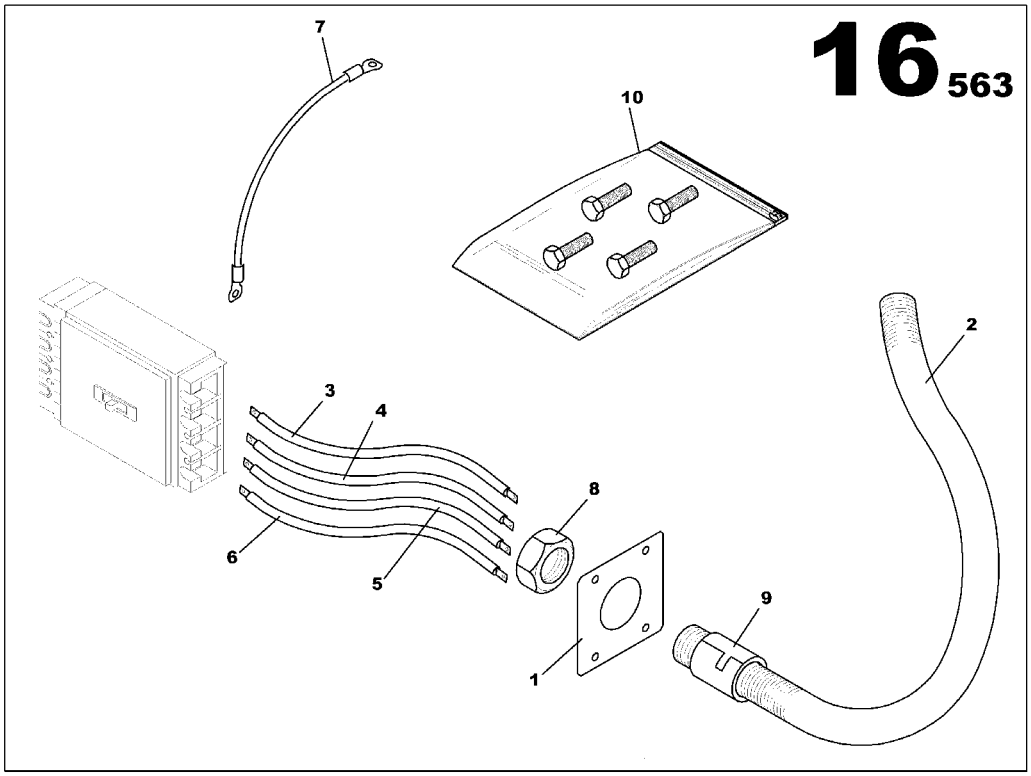

ELECTRIC CONNECTION 250A ASSEMBLY
17132739

Part numbers listed are only parts used in this model

Item	Part No.	Description	Qty	Un	From SN	To SN	Order PN	Page
1	17132747	CABLE AIPR CLOSURE PANEL	1	UN			17132747	
2	85635332	ELECTRICAL SHAFT D48	0.45	ML			85635332	
3	17132911	POWER CABLE AIPR 250A	1	UN			17132911	
4	17132929	POWER CABLE AIPR 250A	1	UN			17132929	
5	17132937	POWER CABLE AIPR 250A	1	UN			17132937	
6	17132945	POWER CABLE AIPR 250A	1	UN			17132945	
7	17132994	EARTHING CABLE 25mm2 L1700	1	UN			17132994	
8	85635803	GLAND NUT SCREW PG48	1	UN			85635803	
9	85636017	PIPE UNION PG48	1	UN			85636017	
10	17133315	SCREWS MCPS AIPR ASSEMBLY	1	UN			17133315	193

SCREWS MCPS AIPR ASSEMBLY

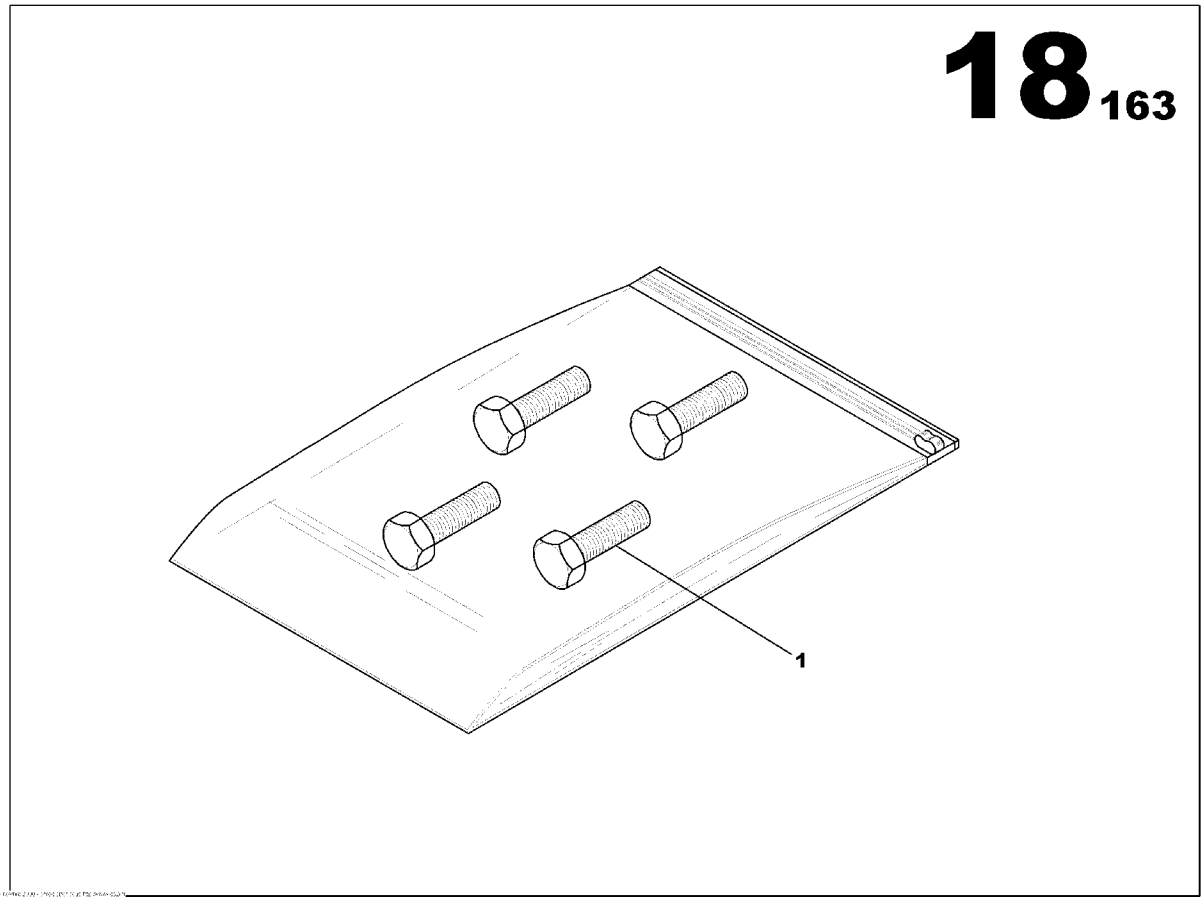

SCREWS MCPS AIPR ASSEMBLY
17133315

Part numbers listed are only parts used in this model

Item	Part No.	Description	Qty	Un	From SN	To SN	Order PN	Page
1	85636389	SCREW H M6x16	4	UN			85636389	

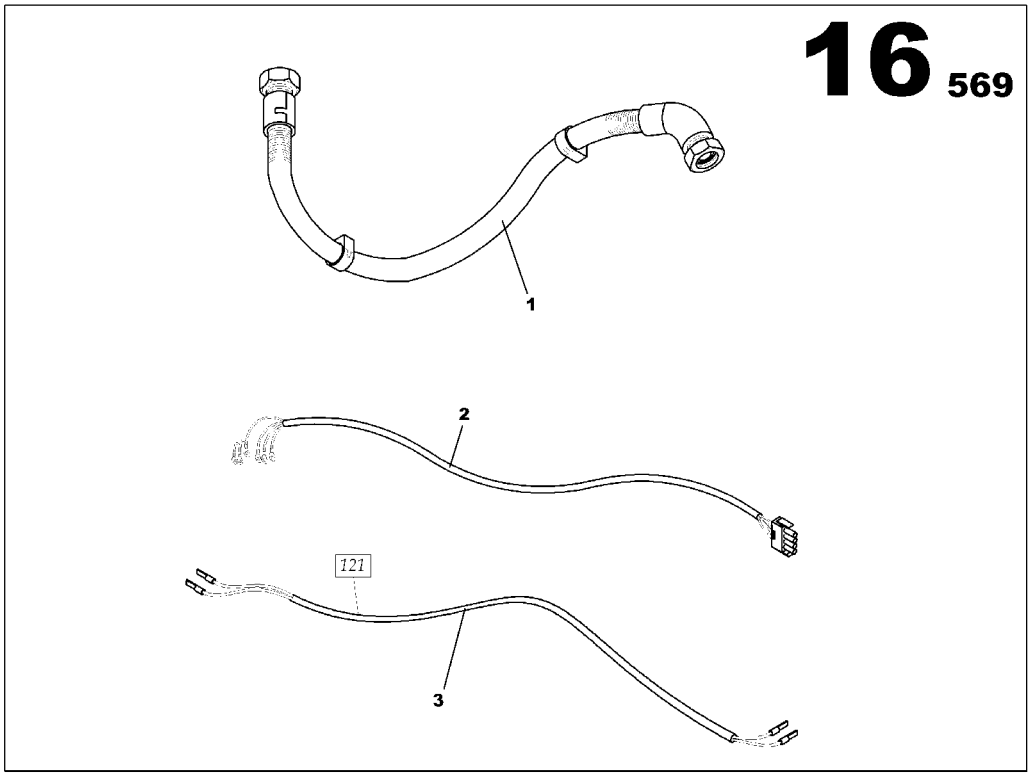
16 569
1
2
121
3

X

17132853

Part numbers listed are only parts used in this model

Item	Part No.	Description	Qty	Un	From SN	To SN	Order PN	Page
1	17132838	ELECTRICAL SHAFT	1	UN			17132838	197
2	17132788	TELYS WIRING LOOM 001	1	UN			17132788	
3	17132820	TELYS WIRING LOOM 121	1	UN			17132820	

ELECTRICAL SHAFT

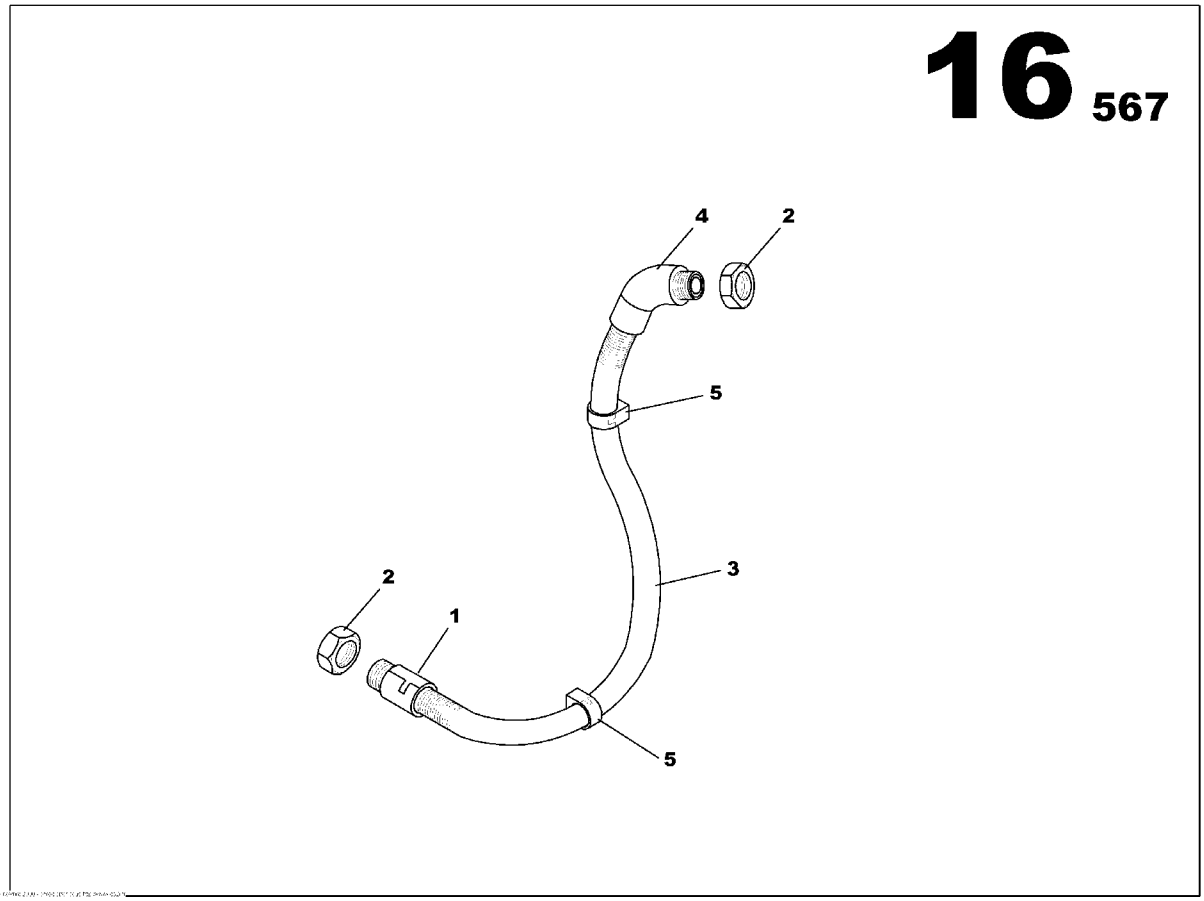

ELECTRICAL SHAFT
17132838

Part numbers listed are only parts used in this model

Item	Part No.	Description	Qty	Un	From SN	To SN	Order PN	Page
1	17133042	PIPE UNION PG29	1	UN			17133042	
2	85413284	GLAND NUT SCREW PG29	2	UN			85413284	
3	17133034	ELECTRICAL SHAFT D29	1.1	ML			17133034	
4	17133059	PIPE UNION ELBOW 45° PG29	1	UN			17133059	
5	85427029	CLIP D29	2	UN			85427029	

RELEASE COIL ASSEMBLY

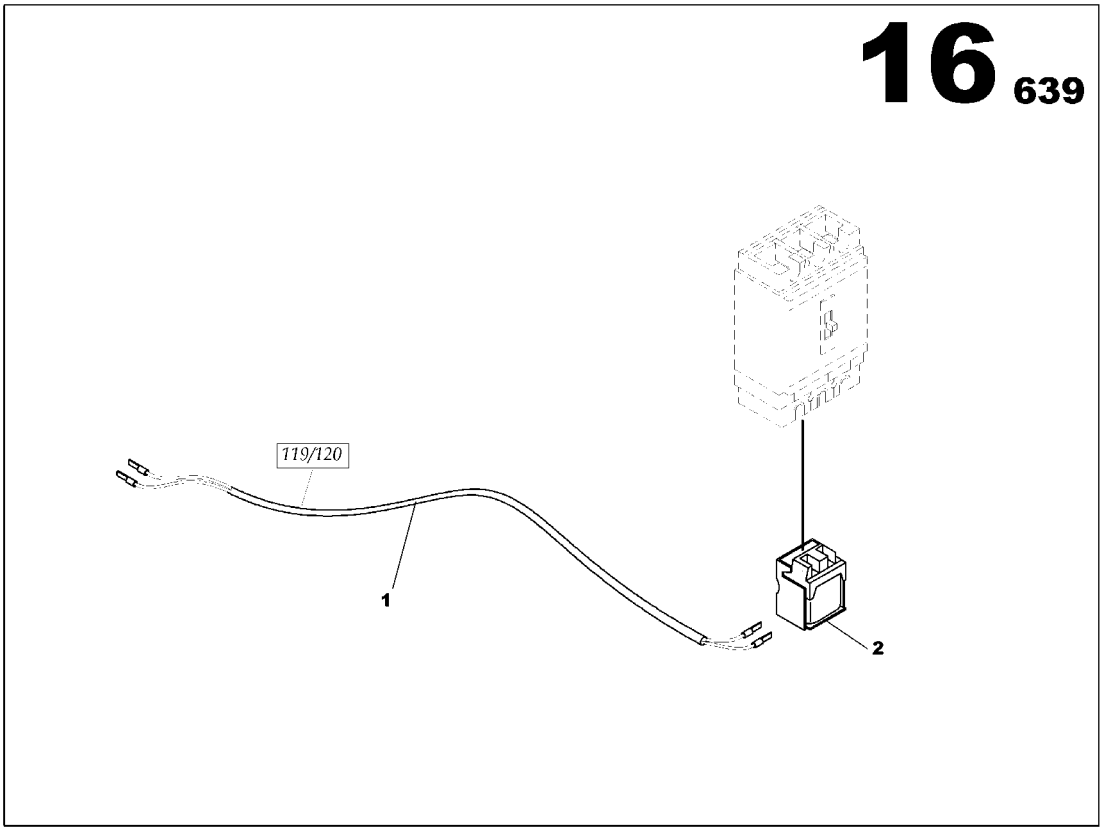

RELEASE COIL ASSEMBLY
17133083

Part numbers listed are only parts used in this model

Item	Part No.	Description	Qty	Un	From SN	To SN	Order PN	Page
1	17132812	TELYS WIRING LOOM 119/120	1	UN			17132812	
2	85408573	CIRCUIT BREAKER SHUNT RELEASE COIL 200/280VAC	1	UN			85408573	

AUTO START OPTION

Non illustré
Not illustrated

AUTO START OPTION

Part numbers listed are only parts used in this model

Item	Part No.	Description	Qty	Un	From SN	To SN	Order PN	Page
1	85633162	WATER PREHEATING ASSEMBLY 1000W	1	UN			85633162	203
2	85636165	WATER PREHEATING OPTION	1	UN			85636165	207
3	85636173	EXTERNAL AMF PREDISPOSITION OPTION *-Information*	1	UN			85636173	209
4	85636223	BATTERY CHARGER OPTION	1	UN			85636223	211
5	85636256	CURRENT SENSOR OPTION	1	UN			85636256	213
6	85635399	TELYS 016 WIRING LOOM ASSEMBLY JD 6081	1	UN			85635399	215
7	17133075	AUXILIARY CONTACT ASSEMBLY	1	UN			17133075	217

WATER PREHEATING ASSEMBLY 1000W

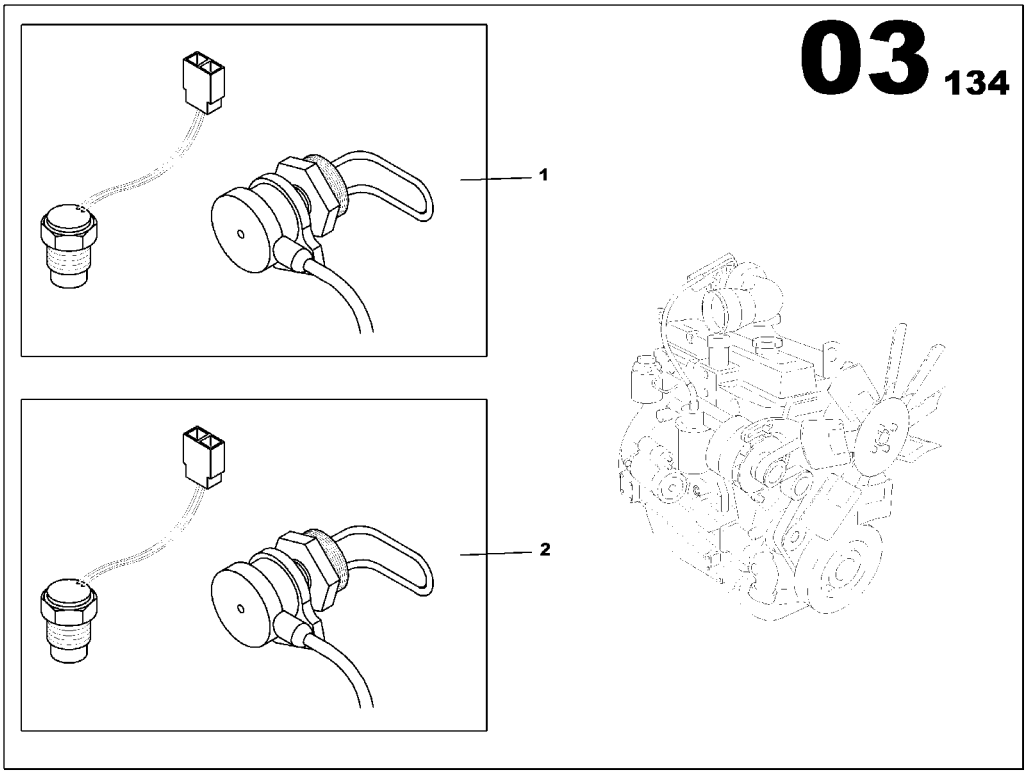

WATER PREHEATING ASSEMBLY 1000W
85633162

Part numbers listed are only parts used in this model

Item	Part No.	Description	Qty	Un	From SN	To SN	Order PN	Page
2	85633170	WATER PREHEATING ASSEMBLY	1	UN	03001480		85633170	205

WATER PREHEATING ASSEMBLY

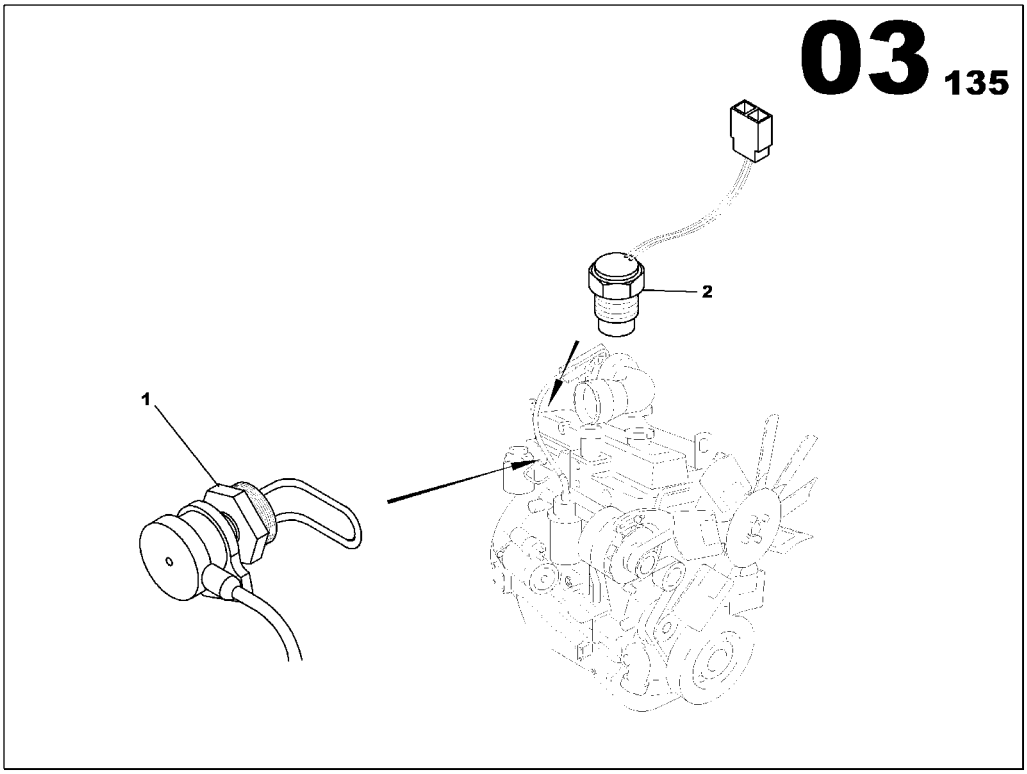

WATER PREHEATING ASSEMBLY
85633170

Part numbers listed are only parts used in this model

Item	Part No.	Description	Qty	Un	From SN	To SN	Order PN	Page
1	85633154	COOLANT HEATER RESISTANCE 1000W 240V	1	UN	03000152		85633154	
2	85404655	TEMPERATURE SWITCH 35/45°	1	UN			85404655	

WATER PREHEATING OPTION

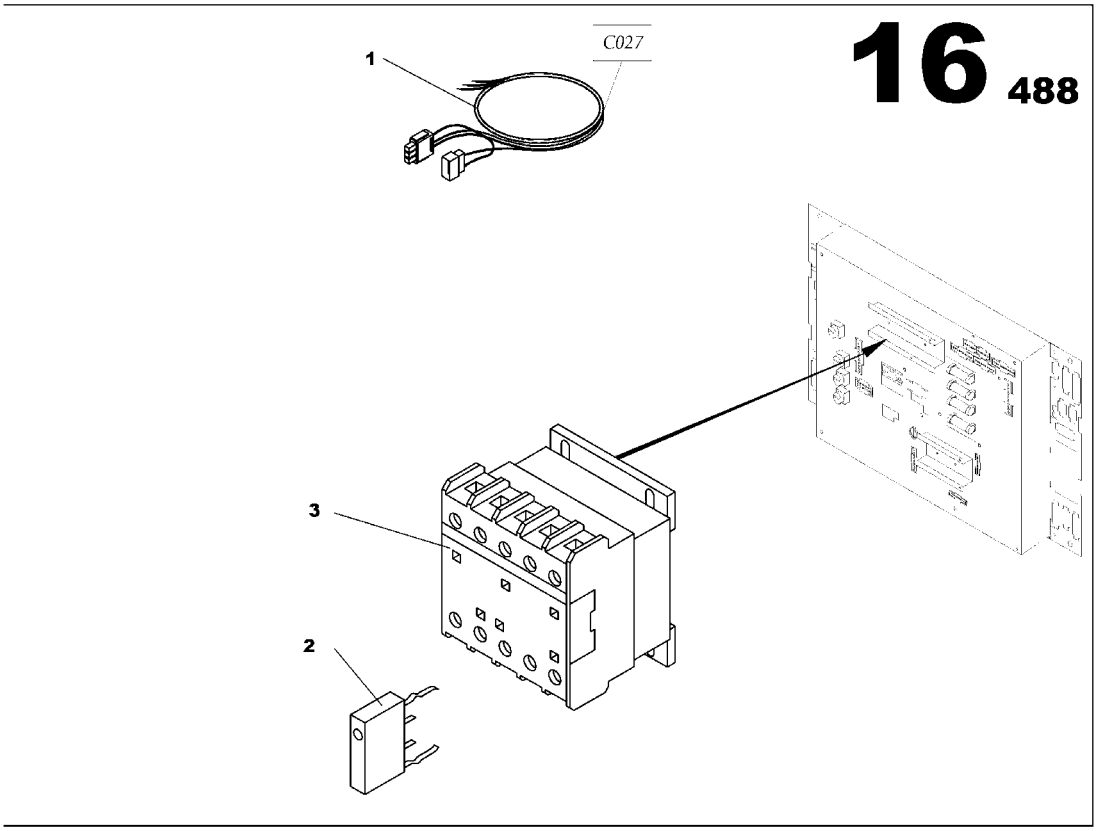

WATER PREHEATING OPTION
85636165

Part numbers listed are only parts used in this model

Item	Part No.	Description	Qty	Un	From SN	To SN	Order PN	Page
1	85506533	WIRING LOOM C027	1	UN			85506533	
2	85620235	VARISTANCE 12-70VDC	1	UN			85620235	
3	85636983	THREE POLES CONTACTOR 24VDC	1	UN			85636983	

EXTERNAL AMF PREDISPOSITION OPTION

EXTERNAL AMF PREDISPOSITION OPTION
85636173

Part numbers listed are only parts used in this model

Item	Part No.	Description	Qty	Un	From SN	To SN	Order PN	Page

BATTERY CHARGER OPTION

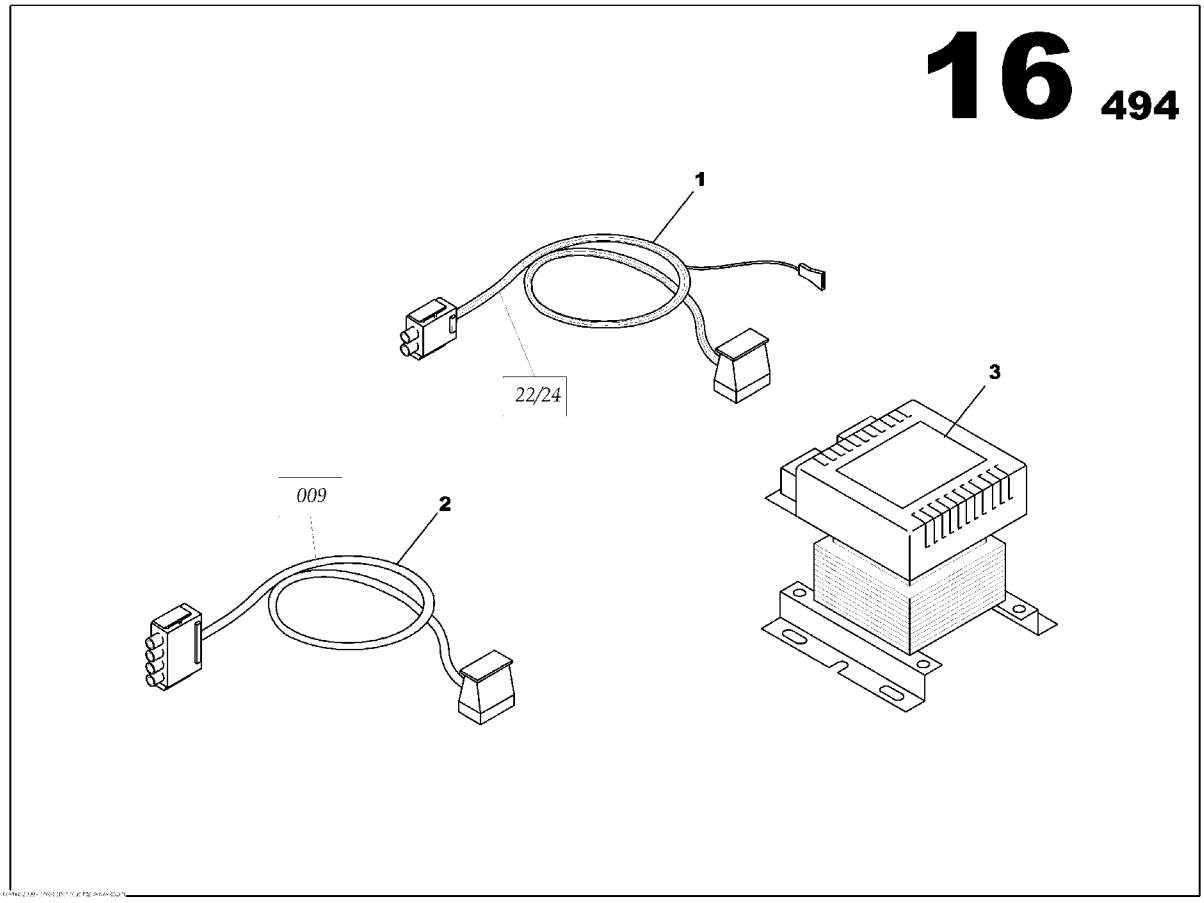

BATTERY CHARGER OPTION
85636223

Part numbers listed are only parts used in this model

Item	Part No.	Description	Qty	Un	From SN	To SN	Order PN	Page
1	85506541	WIRING LOOM C022/024	1	UN			85506541	
2	85506558	WIRING LOOM C009	1	UN			85506558	
3	85507622	BATTERY CHARGER	1	UN			85507622	

CURRENT SENSOR OPTION

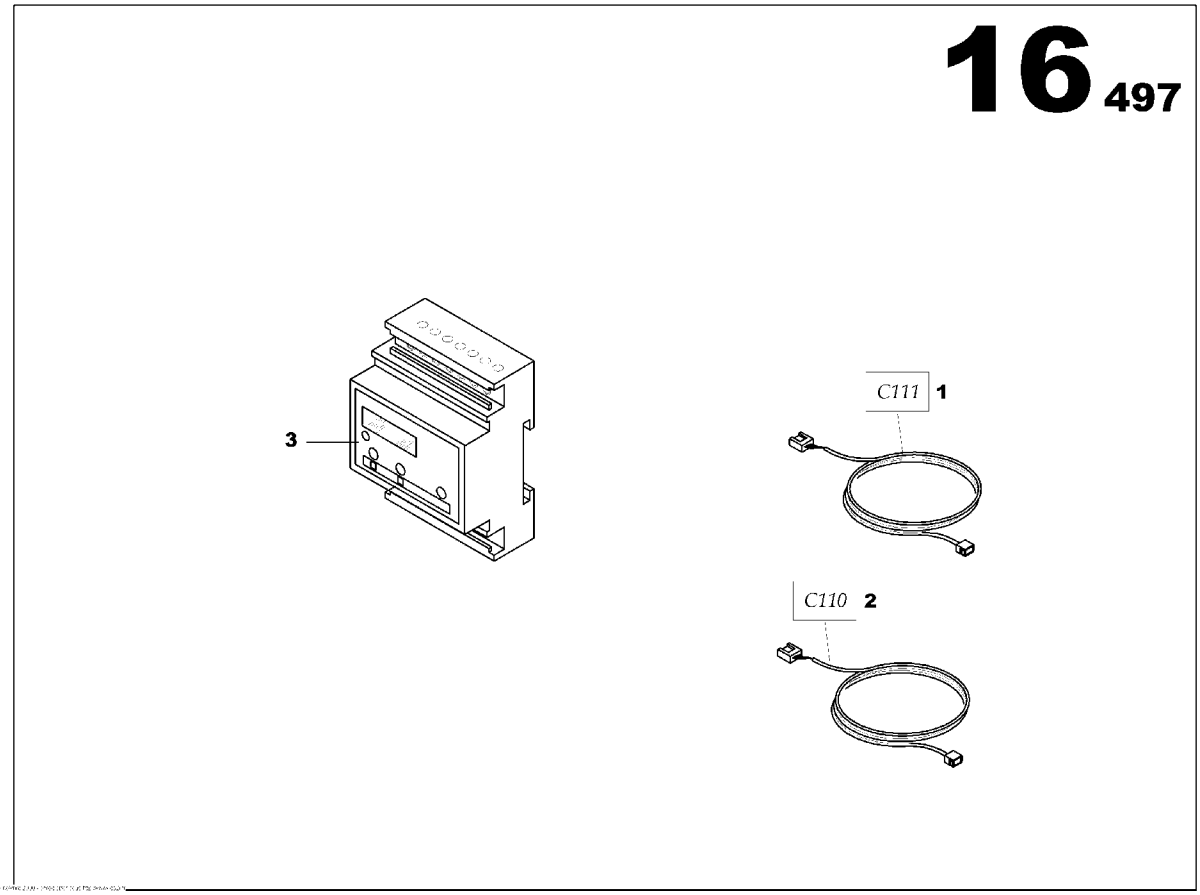

CURRENT SENSOR OPTION
85636256

Part numbers listed are only parts used in this model

Item	Part No.	Description	Qty	Un	From SN	To SN	Order PN	Page
1	85630663	WIRING LOOM C111 L800	1	UN			85630663	
2	85630721	WIRING LOOM C110 L300	1	UN			85630721	
3	85623809	CURRENT SENSOR MODULE	1	UN			85623809	

TELYS 016 WIRING LOOM ASSEMBLY JD 6081

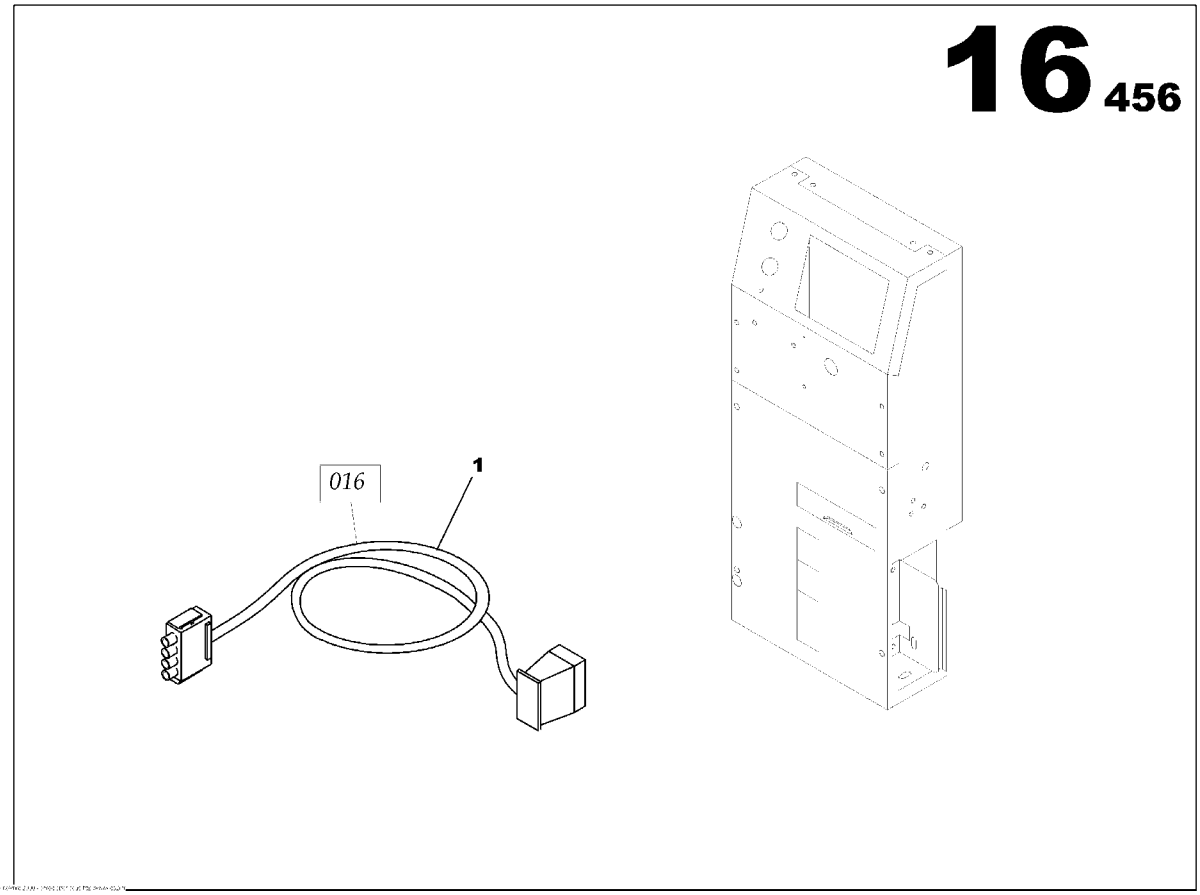

TELYS 016 WIRING LOOM ASSEMBLY JD 6081
85635399

Part numbers listed are only parts used in this model

Item	Part No.	Description	Qty	Un	From SN	To SN	Order PN	Page
1	85635316	TELYS WIRING LOOM 016	1	UN	02009106		85635316	

AUXILIARY CONTACT ASSEMBLY

AUXILIARY CONTACT ASSEMBLY
17133075

Part numbers listed are only parts used in this model

Item	Part No.	Description	Qty	Un	From SN	To SN	Order PN	Page
1	17132820	TELYS WIRING LOOM 121	1	UN			17132820	
2	85408581	AUXILIARY CONTACT	1	UN			85408581	

ENGINE ELECTRONIC REGULATION OPTION

Non illustré
Not illustrated

ENGINE ELECTRONIC REGULATION OPTION

Part numbers listed are only parts used in this model

Item	Part No.	Description	Qty	Un	From SN	To SN	Order PN	Page
1	85401040	ELECTRONIC ACTUATOR	1	UN			85401040	221
2	85637429	ELECTRONIC REGULATION ASSEMBLY	1	UN			85637429	223
3	85638393	REGULATION ADAPTATION BRACKET	1	UN			85638393	
4	85411437	TELYS WIRING LOOM 105	1	UN			85411437	
5	17133166	SPEED POTENTIOMETER OPTION	1	UN			17133166	235

ELECTRONIC ACTUATOR

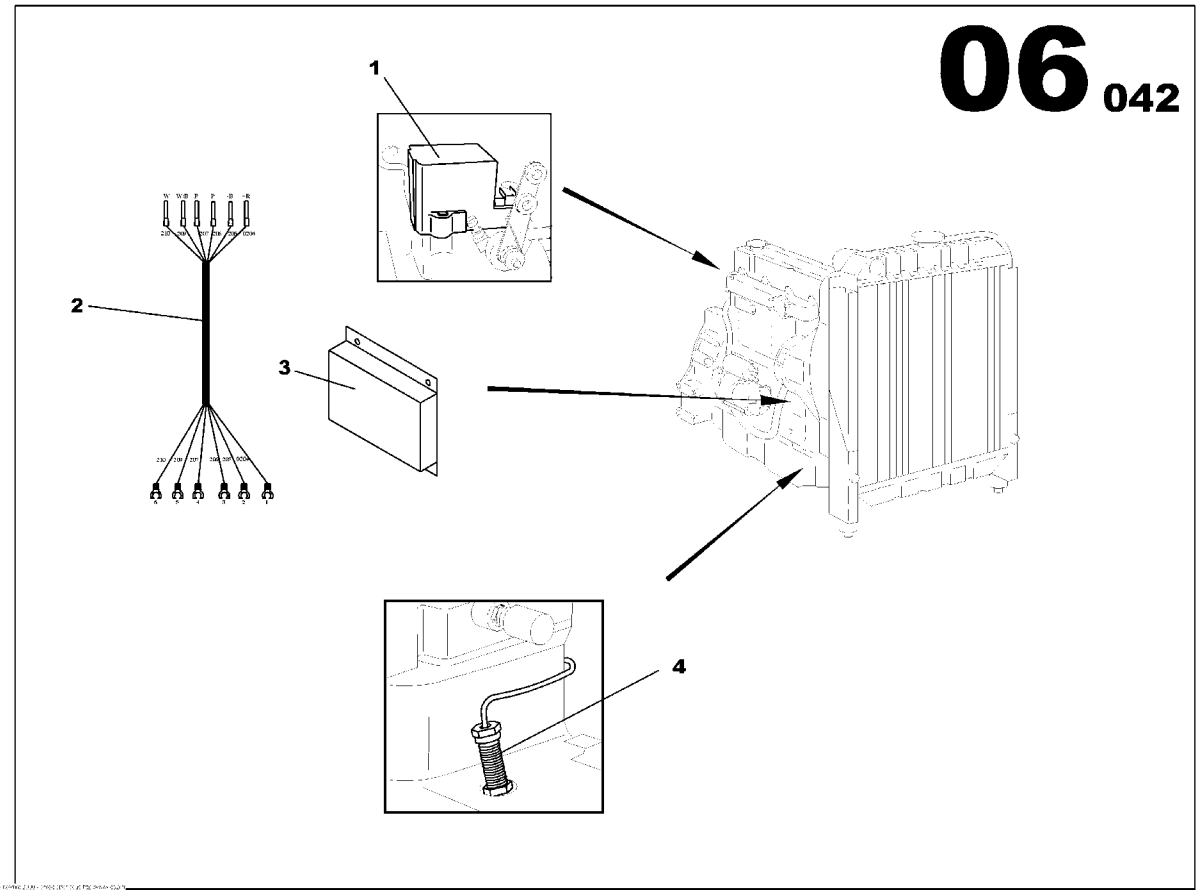

ELECTRONIC ACTUATOR
85401040

Part numbers listed are only parts used in this model

Item	Part No.	Description	Qty	Un	From SN	To SN	Order PN	Page
1	85403616	ELECTRONIC ACTUATOR	1	UN			85403616	
3	17130204	SPEED ELECTRONIC GOVERNOR 12VCC	1	UN	03012817		17130204	
4	85403632	MAGNETIC SPEED SENSOR L75 3/4UNF	1	UN			85403632	

ELECTRONIC REGULATION ASSEMBLY

Non illustré
Not illustrated

ELECTRONIC REGULATION ASSEMBLY
85637429

Part numbers listed are only parts used in this model

Item	Part No.	Description	Qty	Un	From SN	To SN	Order PN	Page
1	85637411	ELECTRONIC REGULATION ASSEMBLY	1	UN	03012897		85637411	225

ELECTRONIC REGULATION ASSEMBLY

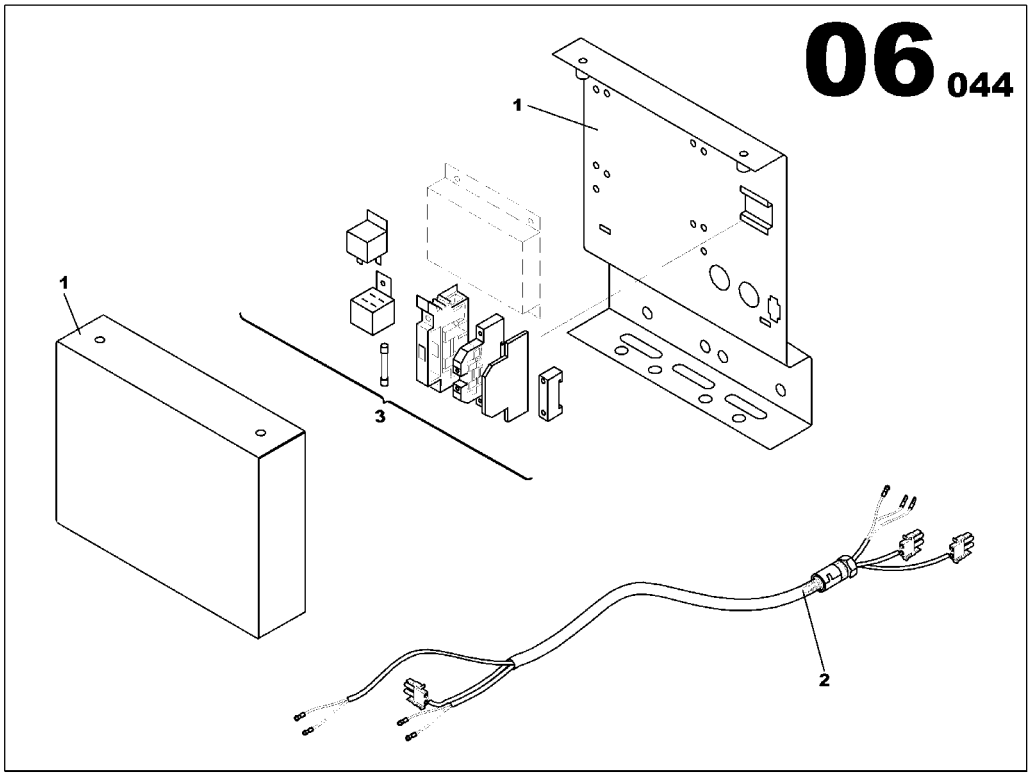

ELECTRONIC REGULATION ASSEMBLY
85637411

Part numbers listed are only parts used in this model

Item	Part No.	Description	Qty	Un	From SN	To SN	Order PN	Page
1	85637445	ELECTRONIC REGULATION ASSEMBLY	1	UN			85637445	231
2	85638989	ELECTRONIC REGULATION ASSEMBLY	1	UN			85638989	233
3	85637437	ELECTRONIC REGULATION ASSEMBLY	1	UN			85637437	227

ELECTRONIC REGULATION ASSEMBLY

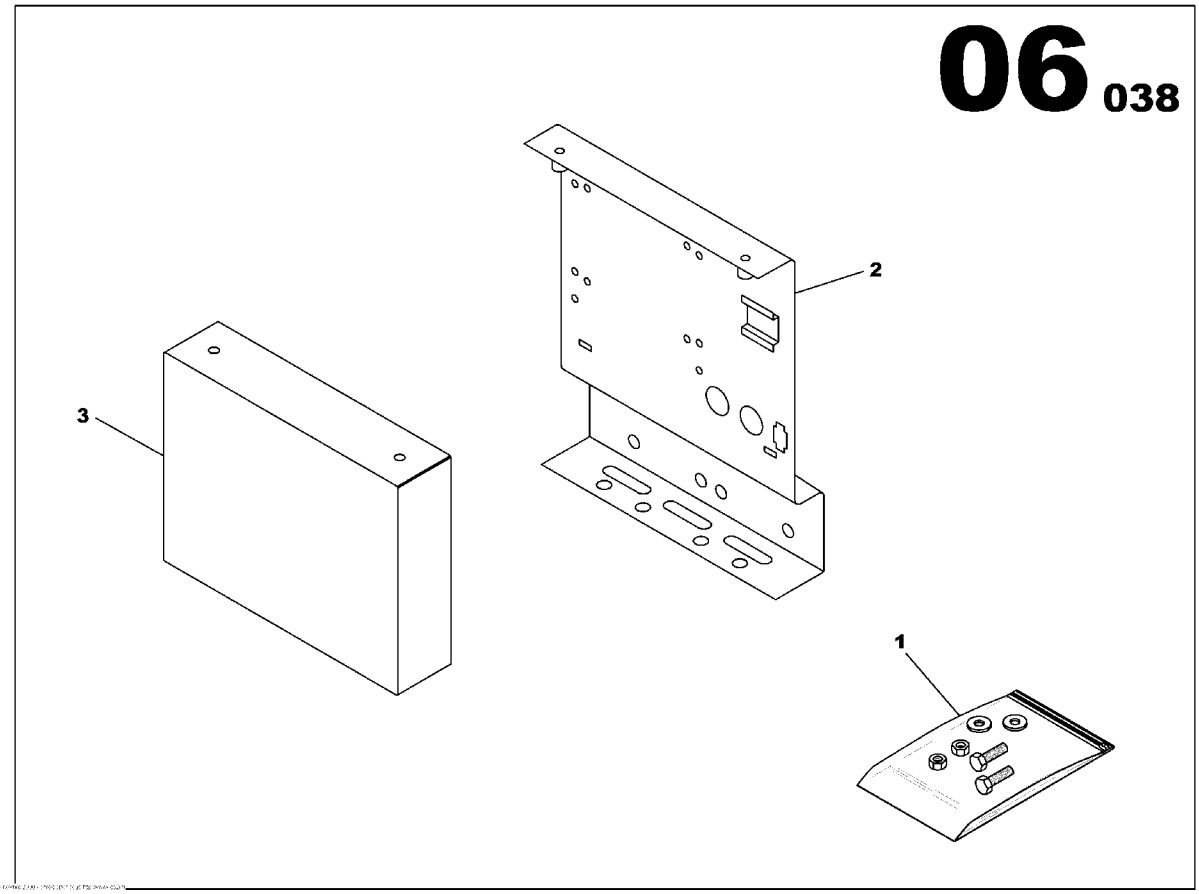

ELECTRONIC REGULATION ASSEMBLY
85637437

Part numbers listed are only parts used in this model

Item	Part No.	Description	Qty	Un	From SN	To SN	Order PN	Page
1	85639425	SCREWS ASSEMBLY	1	UN			85639425	229
2	85638377	REGULATOR BRACKET	1	UN			85638377	
3	85638385	REGULATOR HOUSING COVER	1	UN			85638385	

SCREWS ASSEMBLY

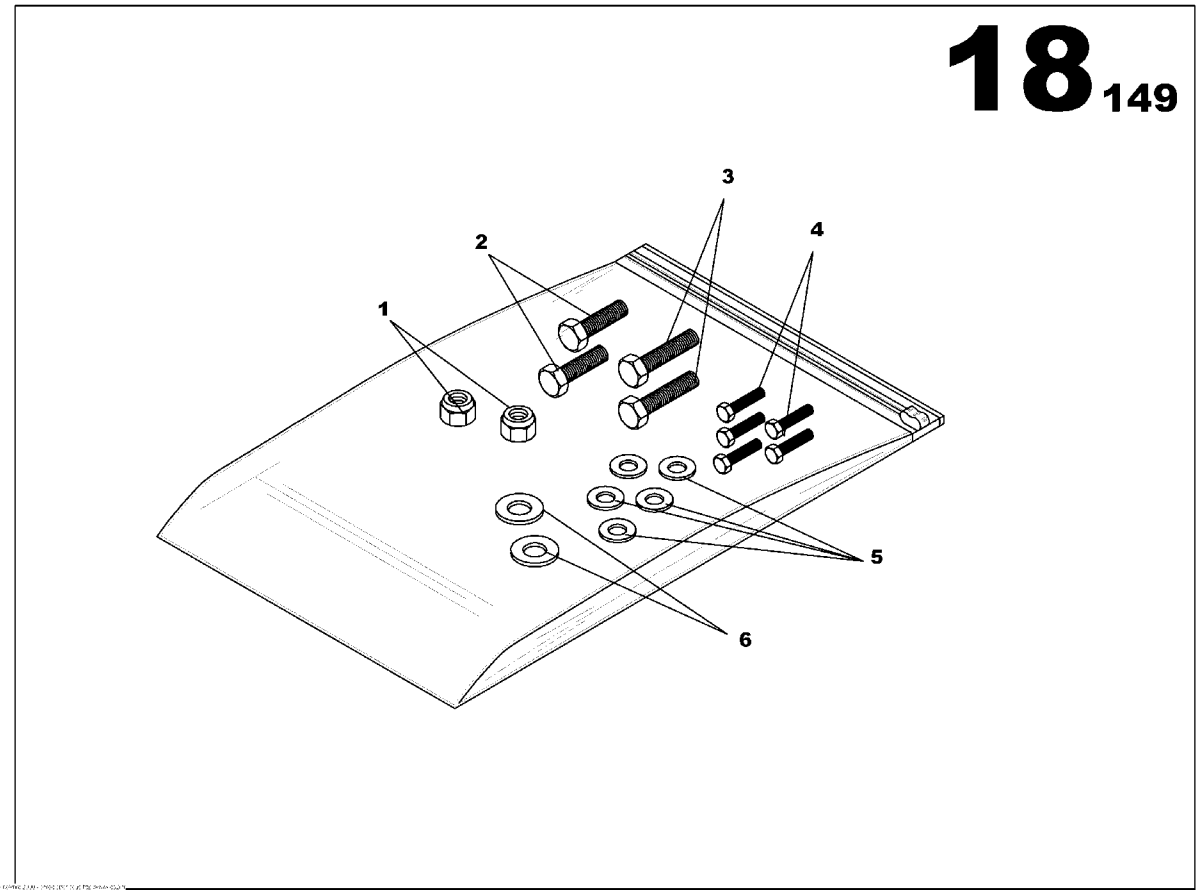

SCREWS ASSEMBLY
85639425

Part numbers listed are only parts used in this model

Item	Part No.	Description	Qty	Un	From SN	To SN	Order PN	Page
1	85430585	NUT M10	2	UN			85430585	
2	85636389	SCREW H M6x16	2	UN			85636389	
3	85631547	SCREW H M10x25	2	UN			85631547	
4	17131160	SCREW H M5x16	5	UN			17131160	
5	85429967	WASHER 5x12	5	UN			85429967	
6	85429728	WASHER D10x22	2	UN			85429728	

ELECTRONIC REGULATION ASSEMBLY

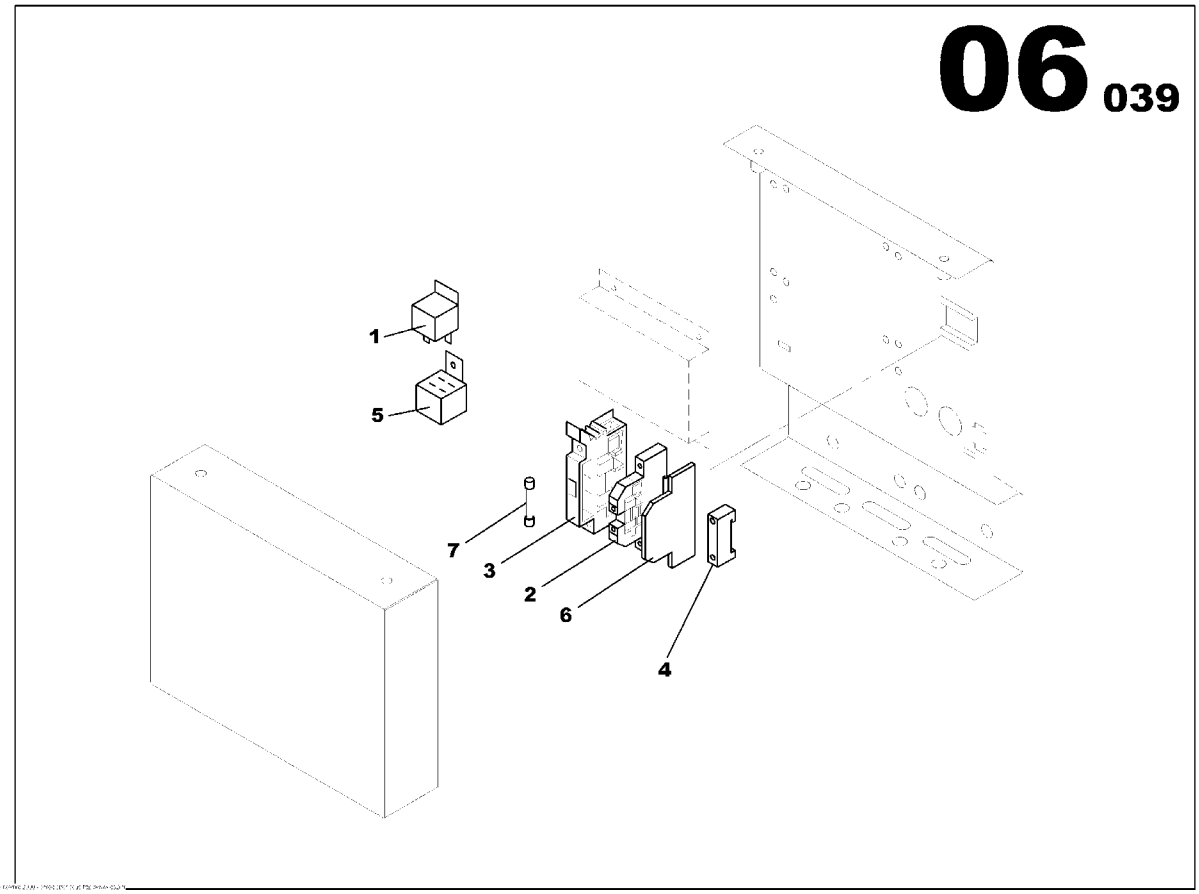

ELECTRONIC REGULATION ASSEMBLY
85637445

Part numbers listed are only parts used in this model

Item	Part No.	Description	Qty	Un	From SN	To SN	Order PN	Page
1	85408896	RELAY 12V 20/30A	1	UN			85408896	
2	85412542	TERMINAL BLOCK	1	UN			85412542	
3	17130006	FUSE HOUSING TERMINAL BLOCK	1	UN			17130006	
4	85408706	STOP	1	UN			85408706	
5	85506608	AUTOMOBILE RELAY BASE	1	UN			85506608	
6	85639060	PLASTIC COVER TERMINAL BLOCK	1	UN			85639060	
7	85639045	FUSE CYLINDRICAL 15A	1	UN			85639045	

ELECTRONIC REGULATION ASSEMBLY

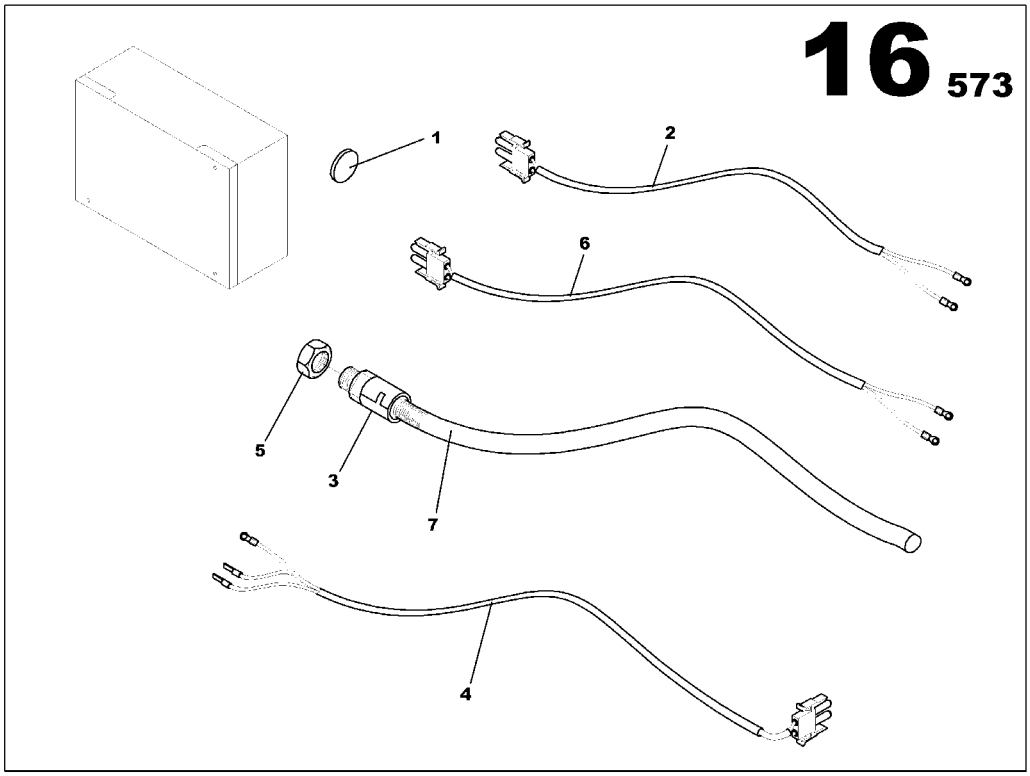

ELECTRONIC REGULATION ASSEMBLY
85638989

Part numbers listed are only parts used in this model

Item	Part No.	Description	Qty	Un	From SN	To SN	Order PN	Page
1	85415388	RUBBER GROMMET D22	1	UN			85415388	
2	85638997	ELECTRONIC REGULATION CABLE 3x1.5mm2	1	UN			85638997	
3	85639052	PIPE UNION PG16	1	UN			85639052	
4	85639003	ELECTRONIC REGULATION CABLE	1	UN			85639003	
5	85408664	GLAND NUT SCREW PG16	1	UN			85408664	
6	85639011	ELECTRONIC REGUL. SUPPLY WIRING LOOM L1200-400-400	1	UN			85639011	
7	85638708	ELECTRICAL SHAFT D19	0.6	ML			85638708	

SPEED POTENTIOMETER OPTION

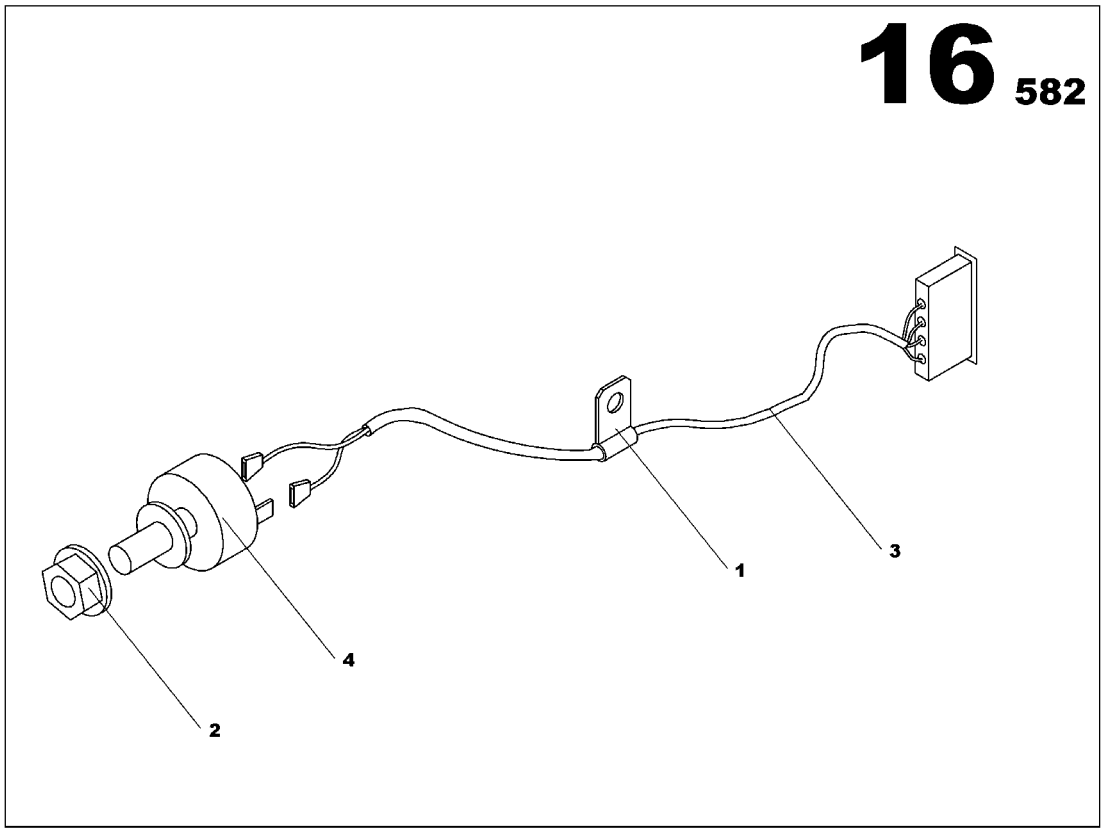

SPEED POTENTIOMETER OPTION
17133166

Part numbers listed are only parts used in this model

Item	Part No.	Description	Qty	Un	From SN	To SN	Order PN	Page
1	85504207	CLAMP D4.7	1	UN			85504207	
2	85504215	LOCK AXE SYSTEM	1	UN			85504215	
3	85503993	WIRING LOOM C105 L540	1	UN			85503993	
4	85504223	POTENTIOMETER 4.7kOHMS	1	UN			85504223	

3 WAY FUEL VALVES OPTION

Non illustré
Not illustrated

3 WAY FUEL VALVES OPTION

Part numbers listed are only parts used in this model

Item	Part No.	Description	Qty	Un	From SN	To SN	Order PN	Page
1	85633261	3 WAY FUEL VALVE ASSEMBLY	1	UN			85633261	239

3 WAY FUEL VALVE ASSEMBLY

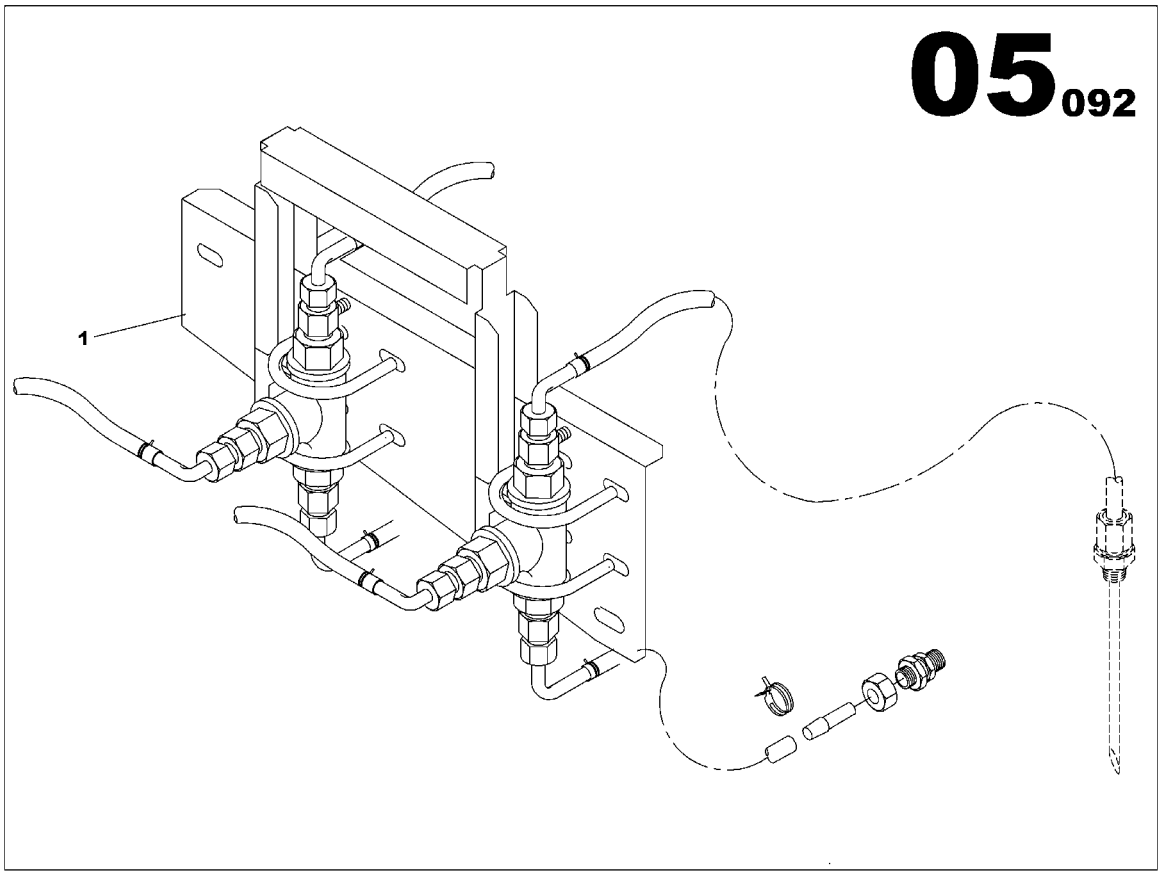

3 WAY FUEL VALVE ASSEMBLY
85633261

Part numbers listed are only parts used in this model

Item	Part No.	Description	Qty	Un	From SN	To SN	Order PN	Page
1	85633345	3 WAY FUEL VALVE ASSEMBLY	1	UN	02011031		85633345	241

3 WAY FUEL VALVE ASSEMBLY

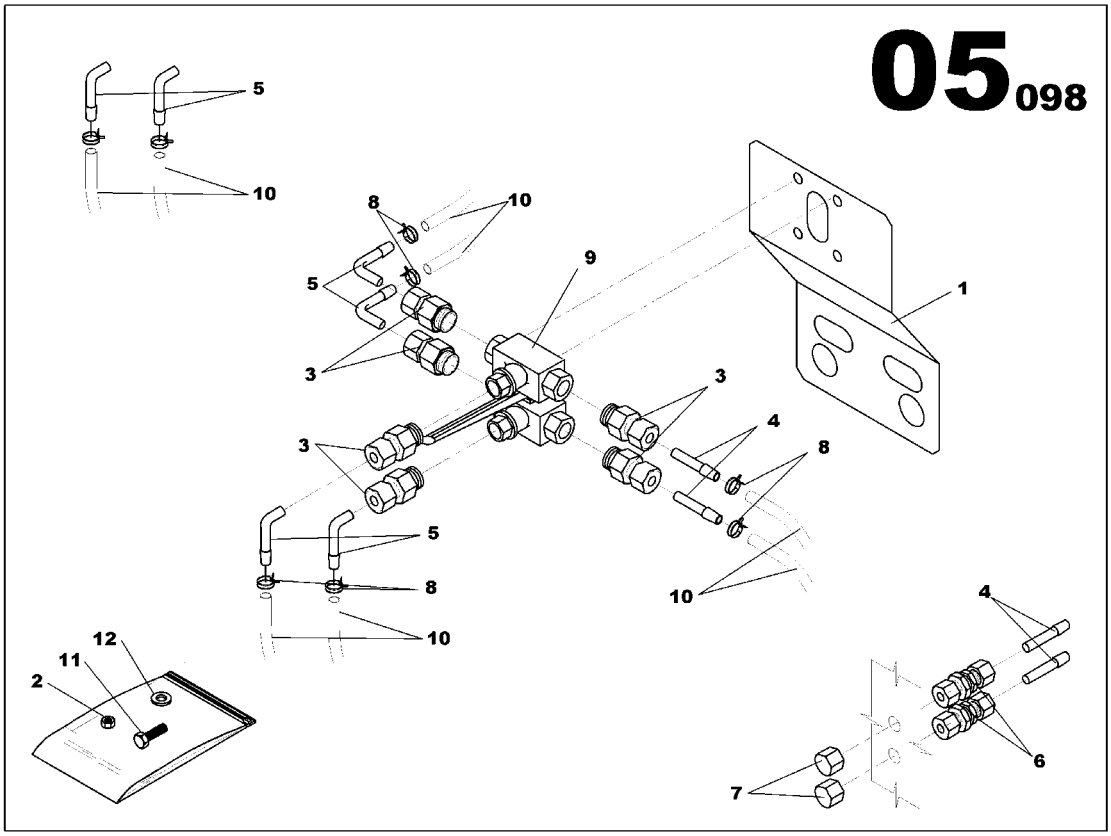

3 WAY FUEL VALVE ASSEMBLY
85633345

Part numbers listed are only parts used in this model

Item	Part No.	Description	Qty	Un	From SN	To SN	Order PN	Page
1	85629632	3 WAY FUEL VALVE BRACKET	1	UN			85629632	
2	85429959	NUT M5	4	UN			85429959	
3	85409266	PIPE UNION REDUCER MAL/FEM 3/8G D8	6	UN			85409266	
4	85426377	PIPE UNION REDUCER MAL/MAL D8 D8	4	UN			85426377	
5	85409290	PIPE UNION ELBOW MAL/MAL D8	6	UN			85409290	
6	85409332	PIPE UNION FEM/FEM D8	2	UN			85409332	
7	85625010	PLUG D08	2	UN			85625010	
8	85409514	SPRING CLAMP D13/15	8	UN			85409514	
9	85631802	3 WAY VALVE	1	UN			85631802	
10	85416436	FLEXIBLE HOSE D8x14	6	ML			85416436	
11	85632206	SCREW H M5x45	4	UN			85632206	
12	85429967	WASHER 5x12	8	UN			85429967	

REINFORCED INSULATION OPTION

Non illustré
Not illustrated

REINFORCED INSULATION OPTION

Part numbers listed are only parts used in this model

Item	Part No.	Description	Qty	Un	From SN	To SN	Order PN	Page
1	85410199	ALTERNATOR LS 442L	1	UN			85410199	245

ALTERNATOR LS 442L

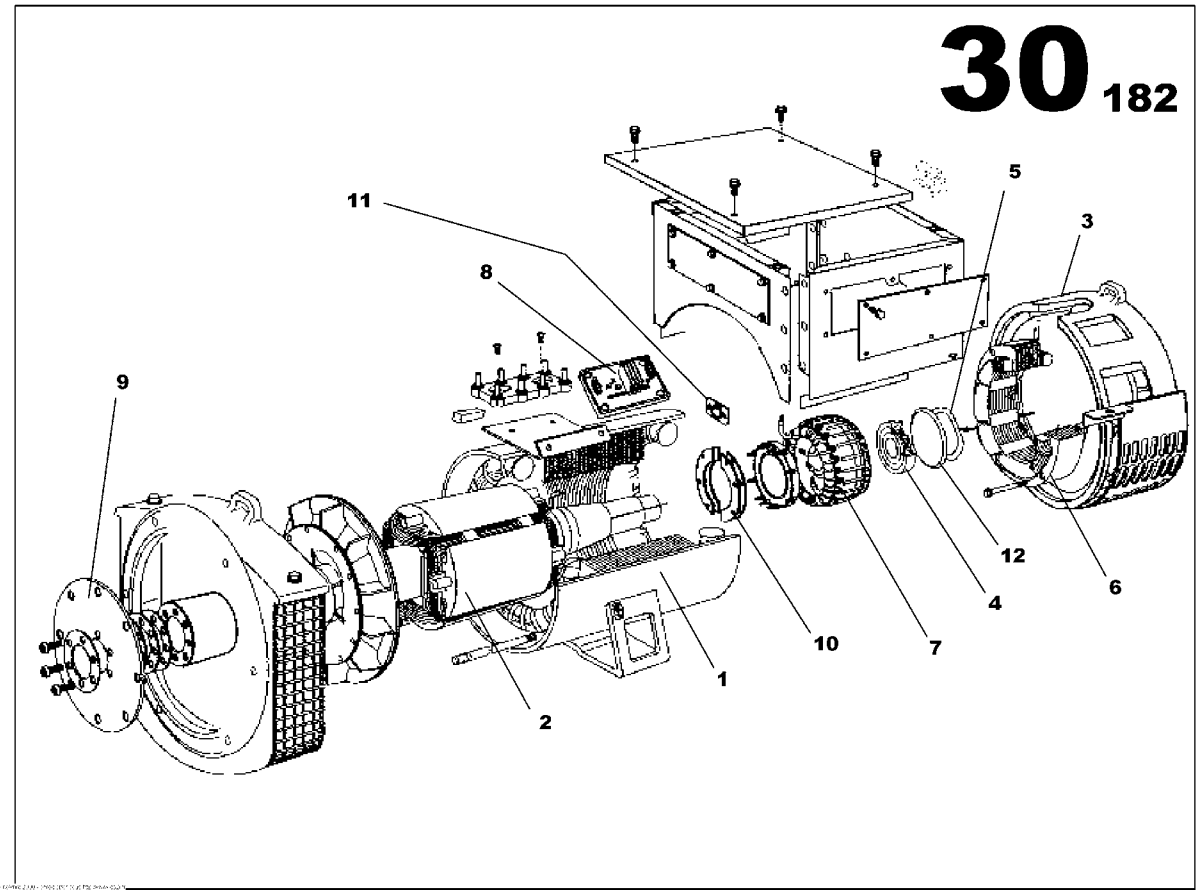

ALTERNATOR LS 442L
85410199

Part numbers listed are only parts used in this model

Item	Part No.	Description	Qty	Un	From SN	To SN	Order PN	Page
1	85508794	WOUND STATOR ASSEMBLY	1	UN			85508794	
2	85509107	WOUND ROTOR ASSEMBLY	1	UN			85509107	
3	85508869	N.D.E BRACKET	1	UN			85508869	
4	85425908	BALL BEARING	1	UN			85425908	
5	85509057	WAVY WASHER	1	UN			85509057	
6	85508901	WOUND EXCITER FIELD	1	UN			85508901	
7	85508950	WOUND EXCITER ARMATURE	1	UN			85508950	
8	85402451	GOVERNOR	1	UN			85402451	
9	85425932	COUPLING DISC LSA 442	1	UN			85425932	
10	85425593	DIOD BRIDGE ASSEMBLY	1	UN			85425593	
11	85425585	SURGE SUPPRESSOR	1	UN			85425585	
12	85509008	O RING	1	UN			85509008	

EXPLOSIVE ATHOSPHERE OPTION

Non illustré
Not illustrated

EXPLOSIVE ATHOSPHERE OPTION

Part numbers listed are only parts used in this model

Item	Part No.	Description	Qty	Un	From SN	To SN	Order PN	Page
1	85410348	AIR SHUT OFF VALVE JD-6068HF150 ASSEMBLY	1	UN			85410348	249
2	85404556	SPARK ARRESTER INERIS DN100 ASSEMBLY	1	UN			85404556	251
3	17132796	TELYS 021 WIRING LOOM ASSEMBLY JD 6081	1	UN			17132796	253

AIR SHUT OFF VALVE JD-6068HF150 ASSEMBLY

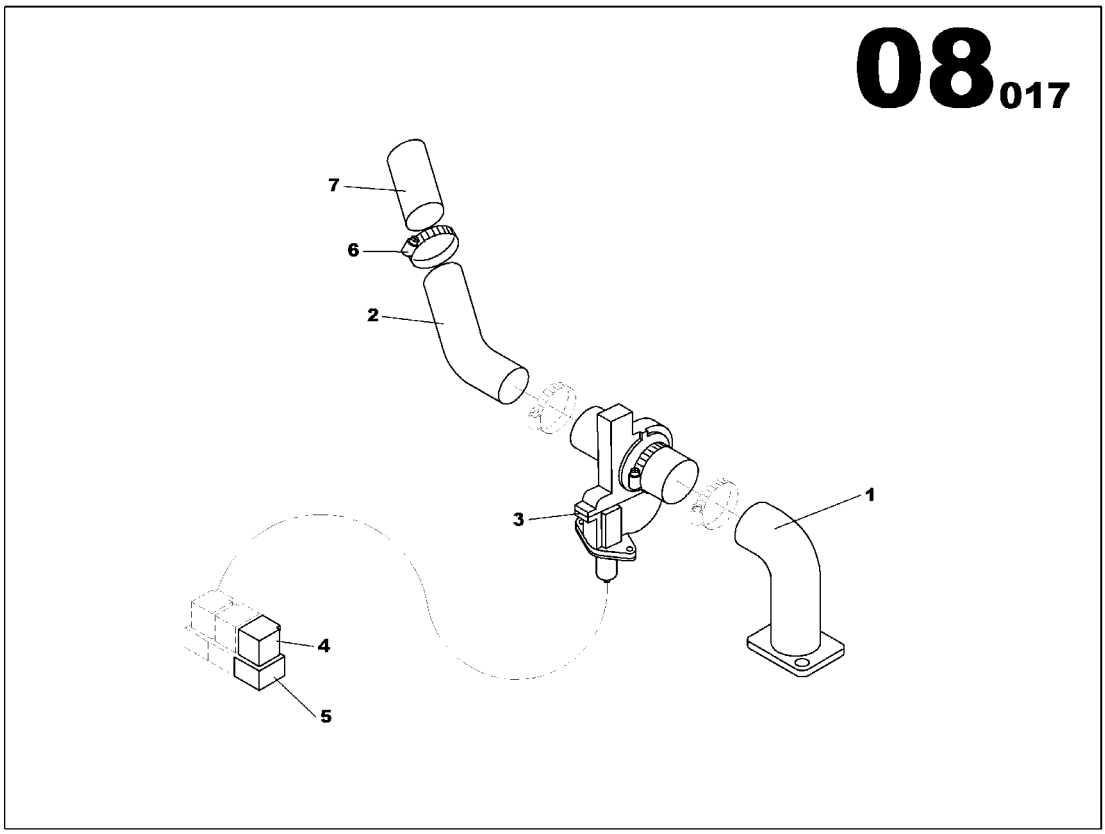

AIR SHUT OFF VALVE JD-6068HF150 ASSEMBLY
85410348

Part numbers listed are only parts used in this model

Item	Part No.	Description	Qty	Un	From SN	To SN	Order PN	Page
1	85426294	ENGINE AIR INLET PIPE D50	1	UN			85426294	
2	85426302	ENGINE AIR INLET PIPE D50	1	UN			85426302	
3	17131616	AIR SHUT OFF VALVE D51	1	UN			17131616	
4	85408896	RELAY 12V 20/30A	1	UN			85408896	
5	85506608	AUTOMOBILE RELAY BASE	1	UN			85506608	
6	85426385	T BOLT CLAMP	1	UN			85426385	
7	85426393	RUBBER HOSE D50 LG110	1	UN			85426393	

SPARK ARRESTER INERIS DN100 ASSEMBLY

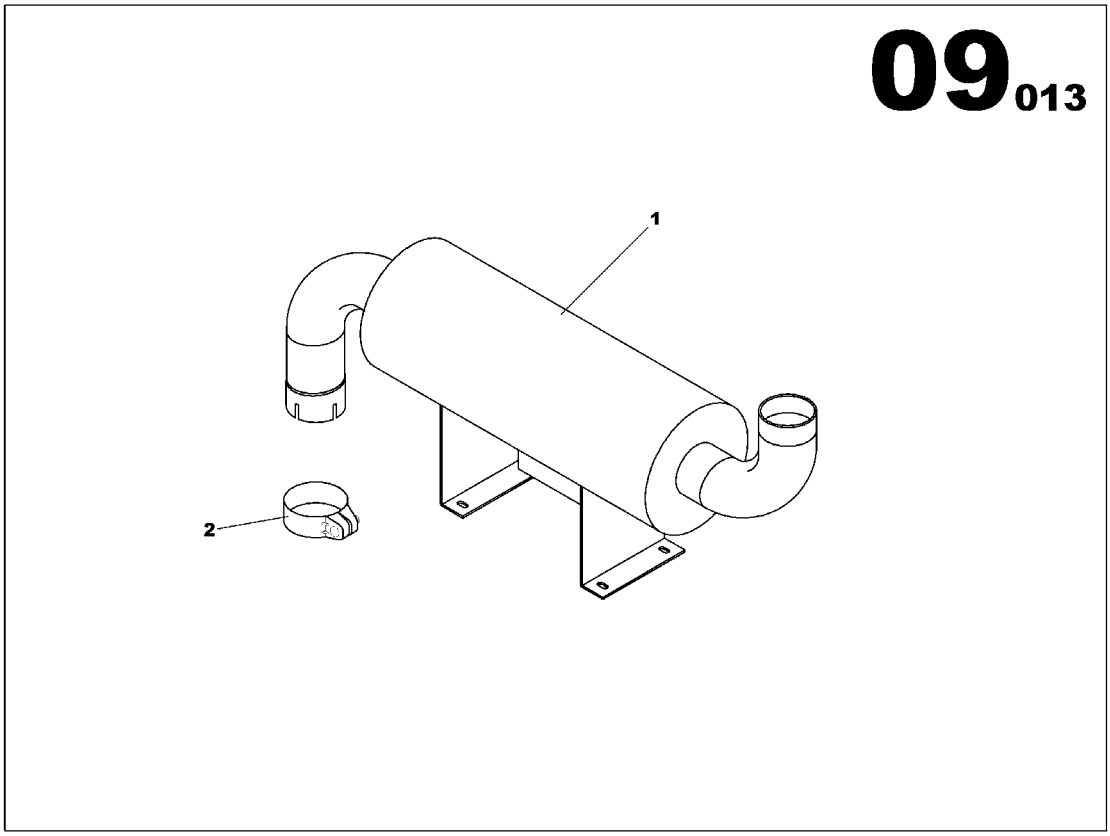

SPARK ARRESTER INERIS DN100 ASSEMBLY
85404556

Part numbers listed are only parts used in this model

Item	Part No.	Description	Qty	Un	From SN	To SN	Order PN	Page
1	85404325	SPARK ARRESTER DN100	1	UN			85404325	
2	85509271	HOSE CLAMP D115	1	UN			85509271	

TELYS 021 WIRING LOOM ASSEMBLY JD 6081

Non illustré
Not illustrated

TELYS 021 WIRING LOOM ASSEMBLY JD 6081
17132796

Part numbers listed are only parts used in this model

Item	Part No.	Description	Qty	Un	From SN	To SN	Order PN	Page
1	17132804	TELYS WIRING LOOM 021 EXTENSION	1	UN			17132804	

DUAL FREQUENCY OPTION

Non illustré
Not illustrated

DUAL FREQUENCY OPTION

Part numbers listed are only parts used in this model

Item	Part No.	Description	Qty	Un	From SN	To SN	Order PN	Page
1	85401040	ELECTRONIC ACTUATOR	1	UN			85401040	257
2	85637429	ELECTRONIC REGULATION ASSEMBLY	1	UN			85637429	259
3	85638393	REGULATION ADAPTATION BRACKET	1	UN			85638393	
4	85411437	TELYS WIRING LOOM 105	1	UN			85411437	
5	85503506	WIRING LOOM C125	1	UN			85503506	
6	17133166	SPEED POTENTIOMETER OPTION	1	UN			17133166	271
7	17133208	DUAL FREQUENCY OPTION	1	UN			17133208	
8	85503498	TELYS WIRING LOOM 124	1	UN			85503498	

ELECTRONIC ACTUATOR

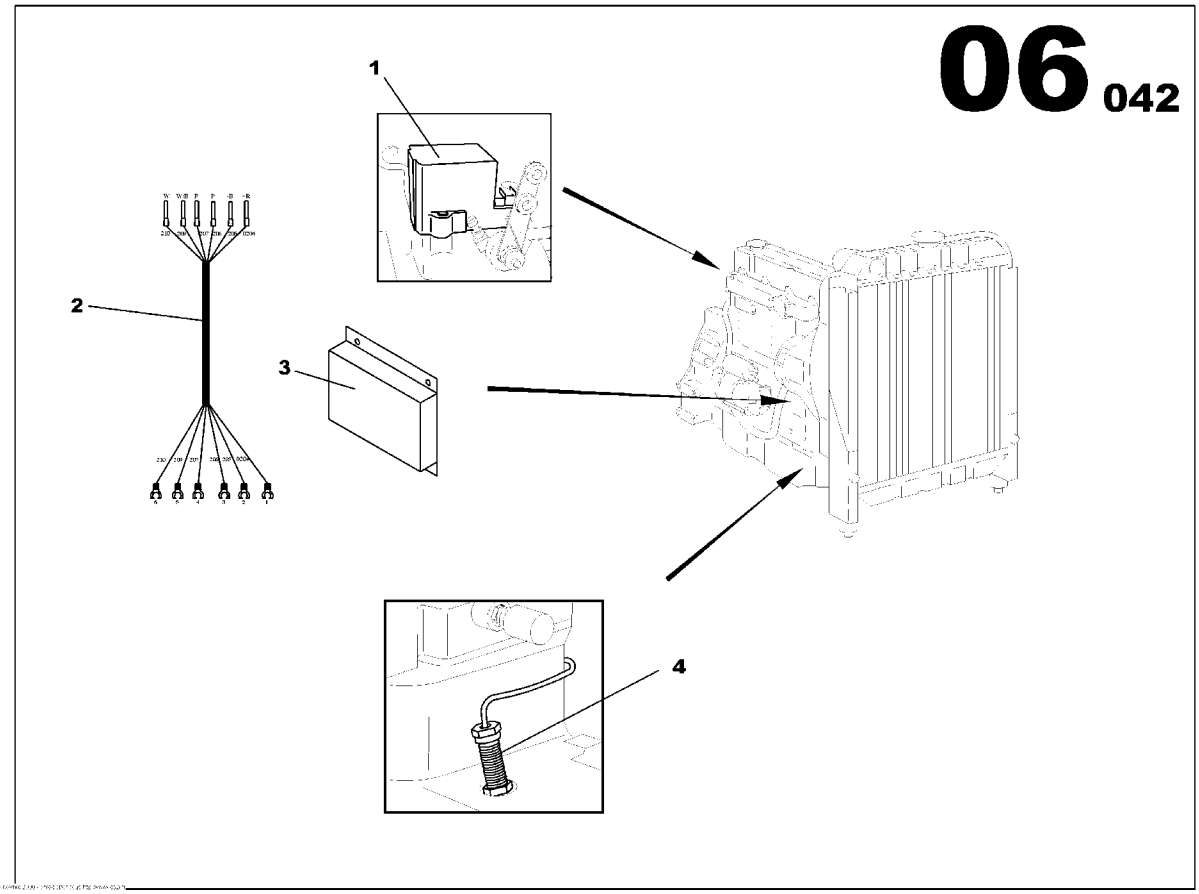

ELECTRONIC ACTUATOR
85401040

Part numbers listed are only parts used in this model

Item	Part No.	Description	Qty	Un	From SN	To SN	Order PN	Page
1	85403616	ELECTRONIC ACTUATOR	1	UN			85403616	
3	17130204	SPEED ELECTRONIC GOVERNOR 12VCC	1	UN	03012817		17130204	
4	85403632	MAGNETIC SPEED SENSOR L75 3/4UNF	1	UN			85403632	

ELECTRONIC REGULATION ASSEMBLY

Non illustré
Not illustrated

ELECTRONIC REGULATION ASSEMBLY
85637429

Part numbers listed are only parts used in this model

Item	Part No.	Description	Qty	Un	From SN	To SN	Order PN	Page
1	85637411	ELECTRONIC REGULATION ASSEMBLY	1	UN	03012897		85637411	261

ELECTRONIC REGULATION ASSEMBLY

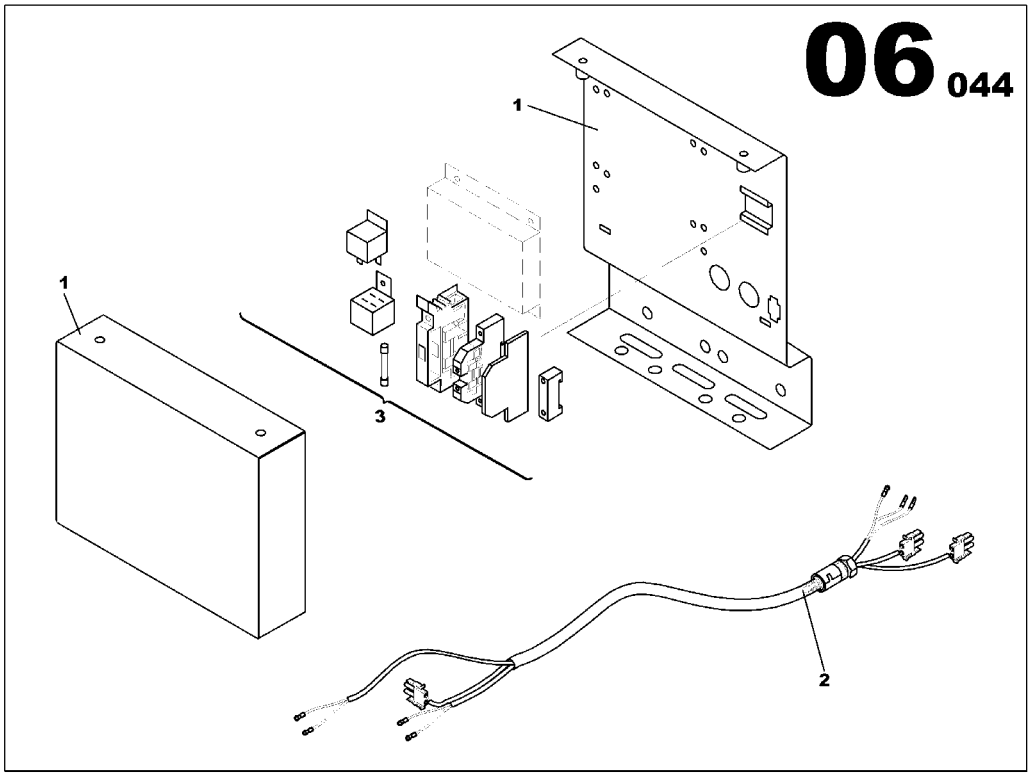

ELECTRONIC REGULATION ASSEMBLY
85637411

Part numbers listed are only parts used in this model

Item	Part No.	Description	Qty	Un	From SN	To SN	Order PN	Page
1	85637445	ELECTRONIC REGULATION ASSEMBLY	1	UN			85637445	267
2	85638989	ELECTRONIC REGULATION ASSEMBLY	1	UN			85638989	269
3	85637437	ELECTRONIC REGULATION ASSEMBLY	1	UN			85637437	263

ELECTRONIC REGULATION ASSEMBLY

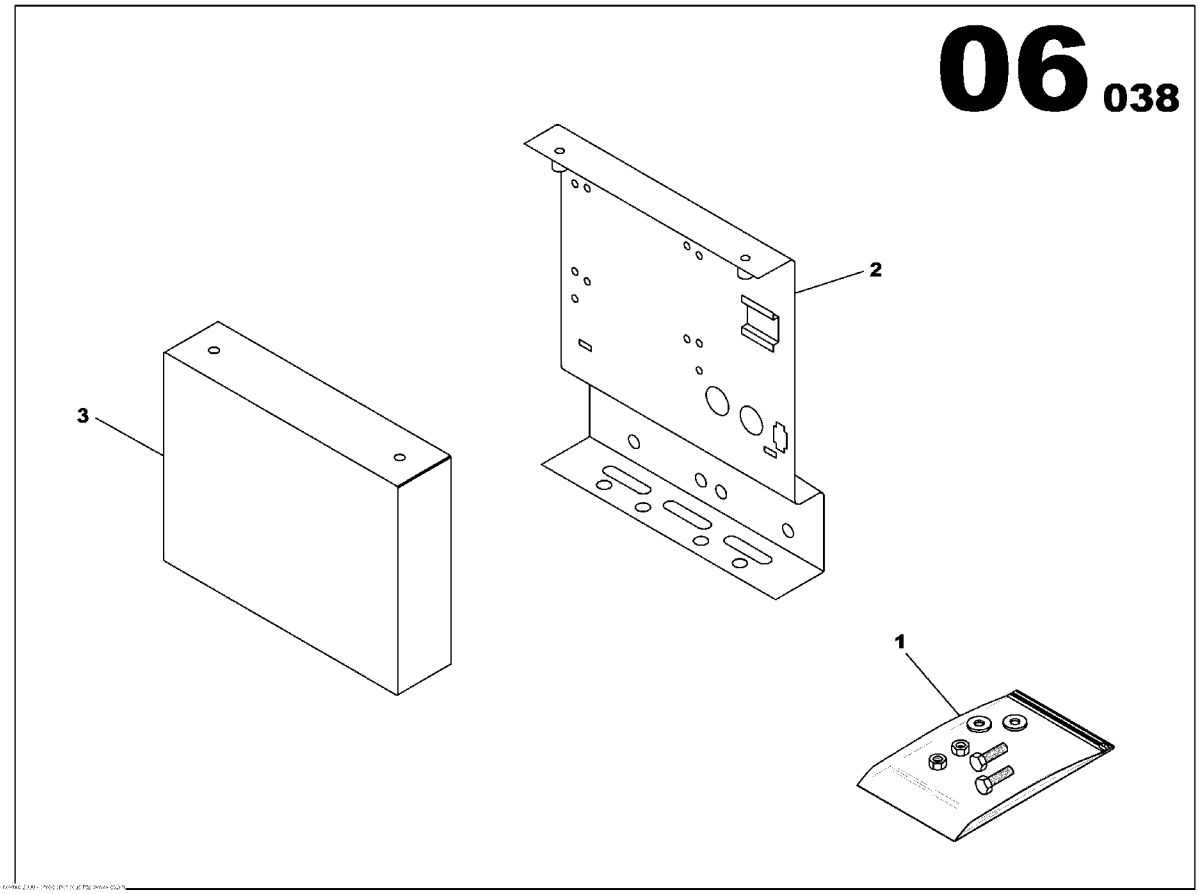

ELECTRONIC REGULATION ASSEMBLY
85637437

Part numbers listed are only parts used in this model

Item	Part No.	Description	Qty	Un	From SN	To SN	Order PN	Page
1	85639425	SCREWS ASSEMBLY	1	UN			85639425	265
2	85638377	REGULATOR BRACKET	1	UN			85638377	
3	85638385	REGULATOR HOUSING COVER	1	UN			85638385	

SCREWS ASSEMBLY

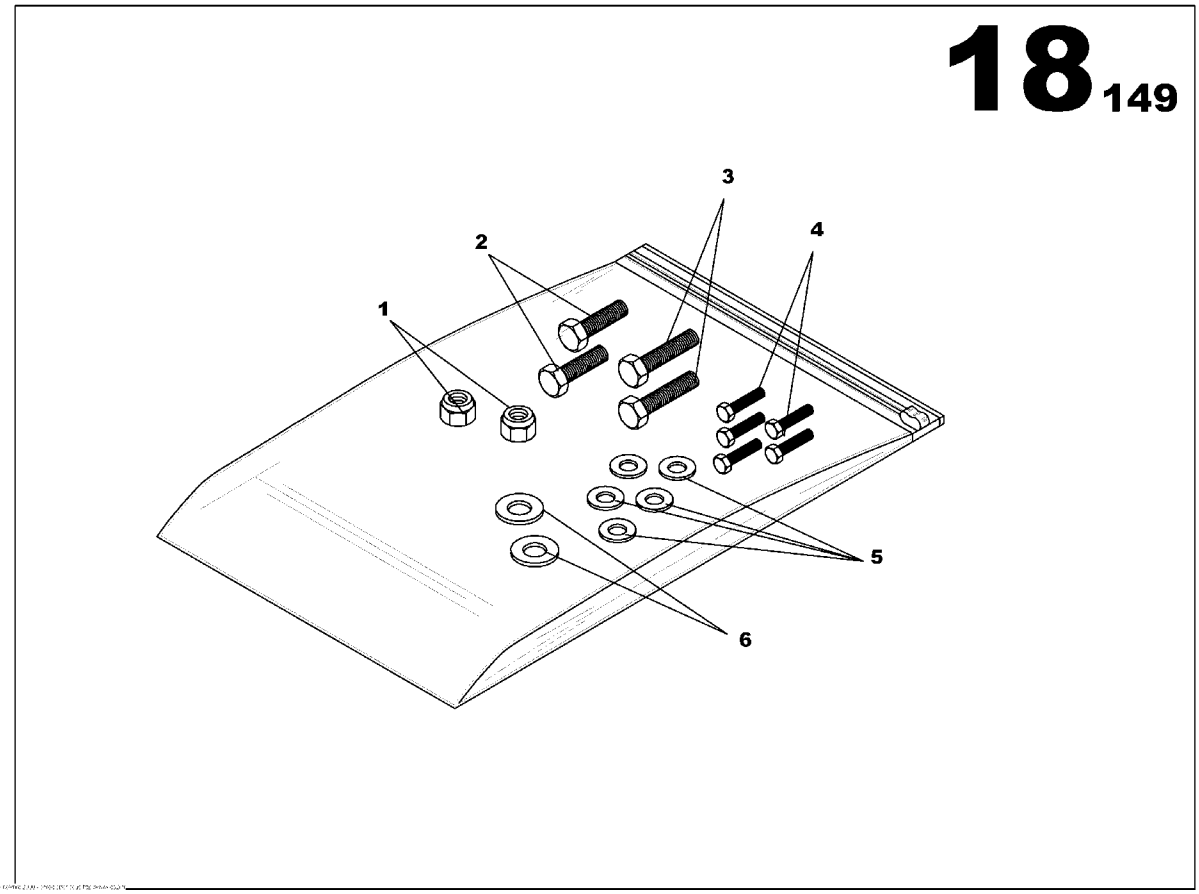

SCREWS ASSEMBLY
85639425

Part numbers listed are only parts used in this model

Item	Part No.	Description	Qty	Un	From SN	To SN	Order PN	Page
1	85430585	NUT M10	2	UN			85430585	
2	85636389	SCREW H M6x16	2	UN			85636389	
3	85631547	SCREW H M10x25	2	UN			85631547	
4	17131160	SCREW H M5x16	5	UN			17131160	
5	85429967	WASHER 5x12	5	UN			85429967	
6	85429728	WASHER D10x22	2	UN			85429728	

ELECTRONIC REGULATION ASSEMBLY

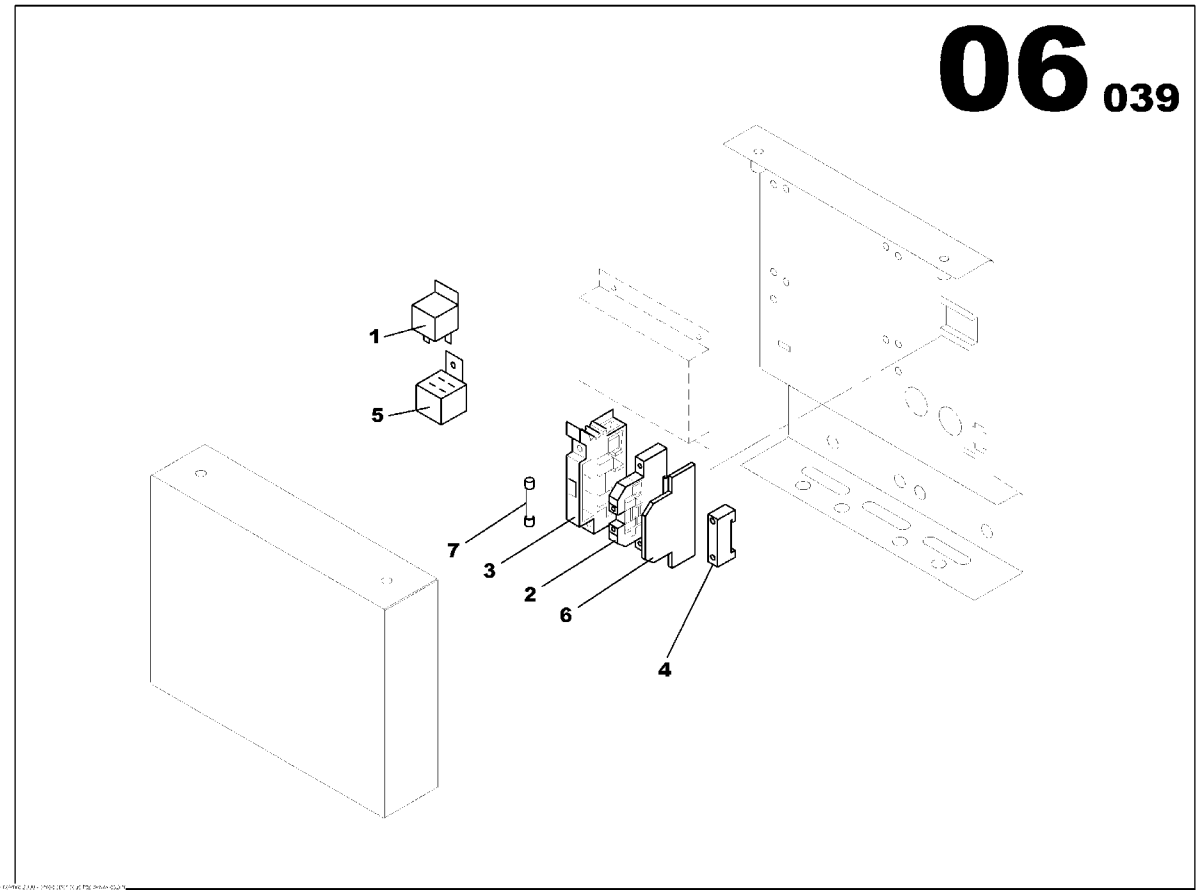

ELECTRONIC REGULATION ASSEMBLY
85637445

Part numbers listed are only parts used in this model

Item	Part No.	Description	Qty	Un	From SN	To SN	Order PN	Page
1	85408896	RELAY 12V 20/30A	1	UN			85408896	
2	85412542	TERMINAL BLOCK	1	UN			85412542	
3	17130006	FUSE HOUSING TERMINAL BLOCK	1	UN			17130006	
4	85408706	STOP	1	UN			85408706	
5	85506608	AUTOMOBILE RELAY BASE	1	UN			85506608	
6	85639060	PLASTIC COVER TERMINAL BLOCK	1	UN			85639060	
7	85639045	FUSE CYLINDRICAL 15A	1	UN			85639045	

ELECTRONIC REGULATION ASSEMBLY

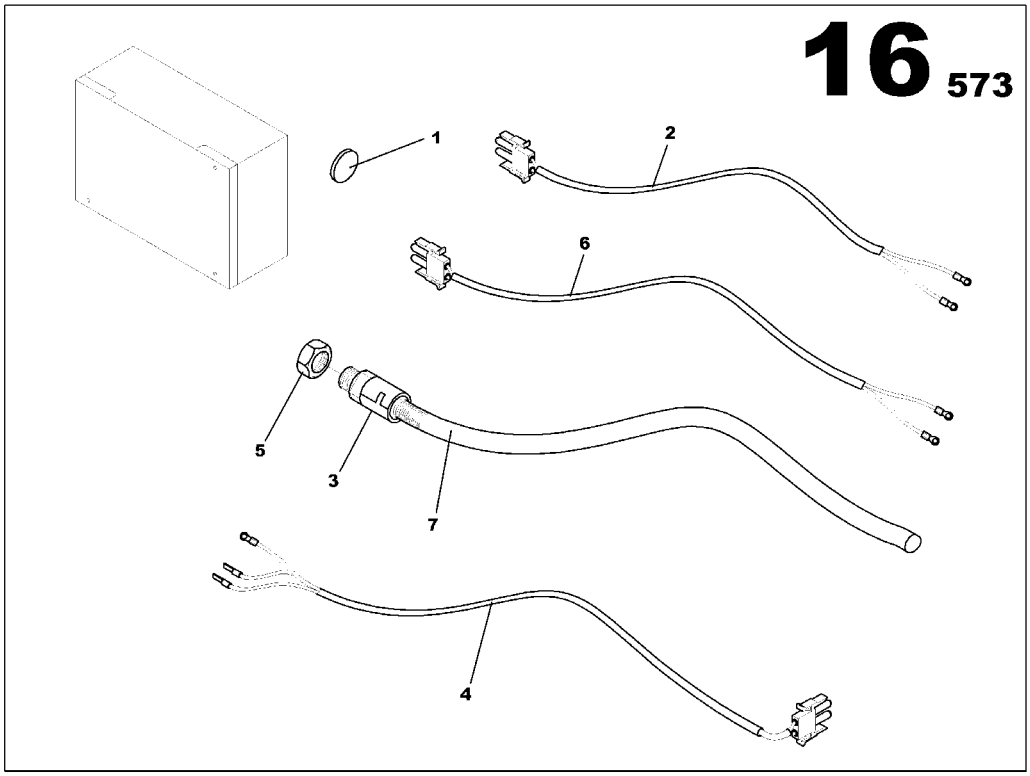

ELECTRONIC REGULATION ASSEMBLY
85638989

Part numbers listed are only parts used in this model

Item	Part No.	Description	Qty	Un	From SN	To SN	Order PN	Page
1	85415388	RUBBER GROMMET D22	1	UN			85415388	
2	85638997	ELECTRONIC REGULATION CABLE 3x1.5mm2	1	UN			85638997	
3	85639052	PIPE UNION PG16	1	UN			85639052	
4	85639003	ELECTRONIC REGULATION CABLE	1	UN			85639003	
5	85408664	GLAND NUT SCREW PG16	1	UN			85408664	
6	85639011	ELECTRONIC REGUL. SUPPLY WIRING LOOM L1200-400-400	1	UN			85639011	
7	85638708	ELECTRICAL SHAFT D19	0.6	ML			85638708	

SPEED POTENTIOMETER OPTION

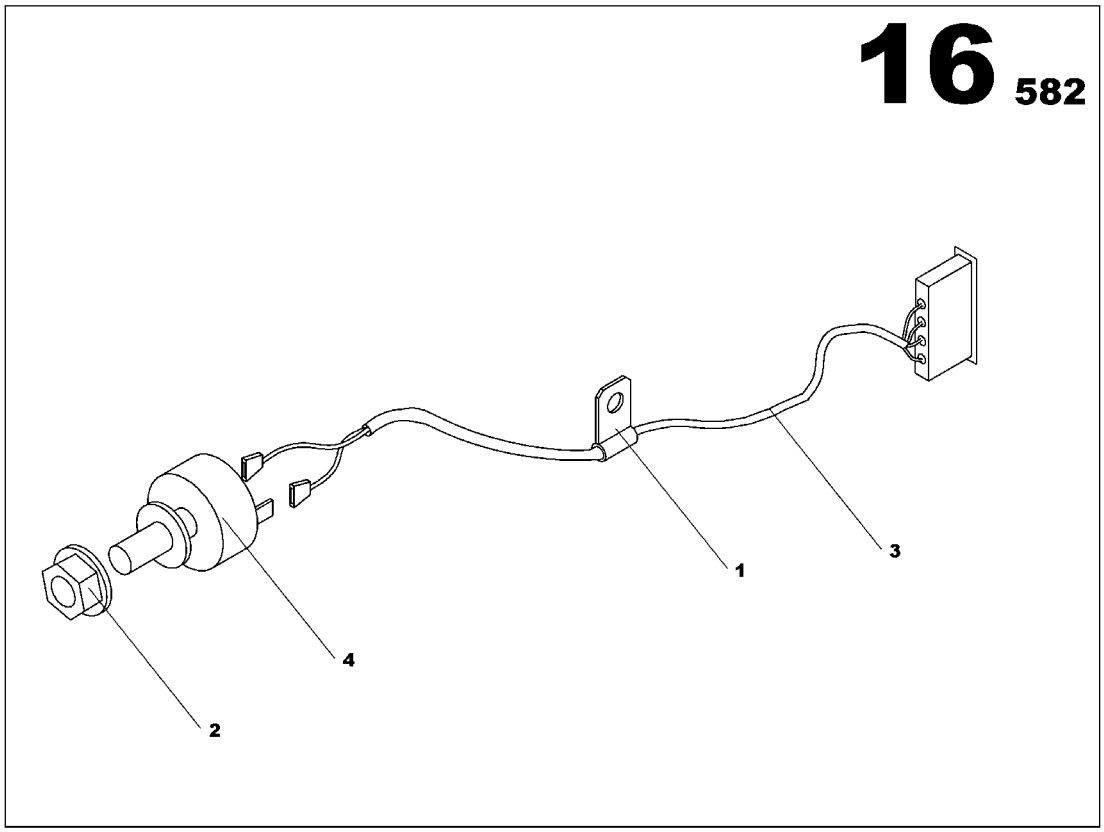

SPEED POTENTIOMETER OPTION
17133166

Part numbers listed are only parts used in this model

Item	Part No.	Description	Qty	Un	From SN	To SN	Order PN	Page
1	85504207	CLAMP D4.7	1	UN			85504207	
2	85504215	LOCK AXE SYSTEM	1	UN			85504215	
3	85503993	WIRING LOOM C105 L540	1	UN			85503993	
4	85504223	POTENTIOMETER 4.7kOHMS	1	UN			85504223	

Index

Part number	Order number	Page
85403020	85403020	6
85410181	85410181	38
85410199	85410199	244
85403251	85403251	46
85637114	85637114	46
85637155	85637155	42
85637163	85637163	46
85637171	85637171	48
85637205	85637205	44
85633154	85633154	206
85633162	85633162	202
85633170	85633170	204
17131319	17131319	102
85403426	85403426	10
85403434	85403434	10
85403442	85403442	6
85403483	85403483	58
85403509	85403509	66
85403517	85403517	64
85629541	85629541	62
85403525	85403525	58
85637304	85637304	54
85403558	85403558	56
85633261	85633261	238
85629632	85629632	242
85633345	85633345	240
17131335	17131335	62
85633386	85633386	94
17131418	17131418	62
17131475	17131475	54

Part number	Order number	Page
85403616	85403616	222
85403616	85403616	258
85403632	85403632	222
85403632	85403632	258
85401040	85401040	256
85401040	85401040	220
17130204	17130204	258
17130204	17130204	222
85637411	85637411	224
85637411	85637411	260
85637429	85637429	256
85637429	85637429	220
85637437	85637437	226
85637437	85637437	262
85637445	85637445	226
85637445	85637445	262
85403699	85403699	74
85403723	85403723	74
85403731	85403731	74
17131509	17131509	74
85637494	85637494	74
17131590	17131590	72
17131608	17131608	70
85403848	85403848	12
85403863	85403863	12
85403921	85403921	12
85404002	85404002	6
85404069	85404069	12
85404101	85404101	12
85410348	85410348	248

Part number	Order number	Page
85426294	85426294	250
85426302	85426302	250
17131616	17131616	250
85404267	85404267	20
85404267	85404267	16
17131624	17131624	16
85404291	85404291	6
85637569	85637569	20
85637569	85637569	16
85637577	85637577	46
85637585	85637585	46
85422772	85422772	94
85404325	85404325	252
85404341	85404341	94
85404556	85404556	248
85637601	85637601	114
85626877	85626877	78
85637619	85637619	76
85637643	85637643	82
85637668	85637668	82
85637676	85637676	76
85404572	85404572	66
85404580	85404580	62
85417459	85417459	68
85404655	85404655	206
17131673	17131673	62
17131731	17131731	90
17131731	17131731	88
17131830	17131830	86
17131830	17131830	86

Index

Part number	Order number	Page
17131848	17131848	84
17131855	17131855	100
17131863	17131863	98
85405017	85405017	46
85401883	85401883	88
85401883	85401883	90
85634046	85634046	80
85637874	85637874	80
85637882	85637882	80
85637890	85637890	80
85509255	85509255	90
85509255	85509255	88
85509248	85509248	88
85509248	85509248	90
17131962	17131962	88
17131962	17131962	90
17131970	17131970	90
17131970	17131970	88
85491892	85491892	114
17132010	17132010	88
17132010	17132010	90
85638005	85638005	114
85638013	85638013	114
85638021	85638021	114
85638047	85638047	114
85638054	85638054	114
85638070	85638070	114
85638088	85638088	114
85638096	85638096	114
17132028	17132028	114

Part number	Order number	Page
17132036	17132036	114
17132036	17132036	114
17132044	17132044	114
17132051	17132051	112
17132069	17132069	98
85638120	85638120	114
85638138	85638138	114
85638153	85638153	114
85638179	85638179	114
85638187	85638187	114
85638195	85638195	114
85638203	85638203	114
85638211	85638211	106
85638245	85638245	102
17132101	17132101	114
17132135	17132135	114
17132143	17132143	114
85638252	85638252	114
85406130	85406130	132
85406155	85406155	114
85406189	85406189	114
85630515	85630515	140
85509305	85509305	116
85634335	85634335	116
17132150	17132150	116
85417186	85417186	116
85406213	85406213	116
85492460	85492460	116
85509263	85509263	94
85621142	85621142	116

Part number	Order number	Page
17132176	17132176	174
85638260	85638260	116
85638278	85638278	116
17132184	17132184	116
17132184	17132184	116
85406387	85406387	74
85406395	85406395	74
85406460	85406460	108
85505543	85505543	158
17132192	17132192	178
85490100	85490100	158
85501435	85501435	36
85491991	85491991	98
85407294	85407294	118
85407294	85407294	122
85634509	85634509	154
85634509	85634509	158
85634517	85634517	158
85634517	85634517	154
85634533	85634533	158
85634533	85634533	154
85634574	85634574	154
85634574	85634574	158
85509164	85509164	24
85634582	85634582	158
85634582	85634582	154
85634608	85634608	152
85634616	85634616	98
85634624	85634624	120
85638377	85638377	264

Index

Part number	Order number	Page
85638377	85638377	228
85638385	85638385	264
85638385	85638385	228
85638393	85638393	220
85638393	85638393	256
17132218	17132218	90
17132218	17132218	88
17132317	17132317	68
17132325	17132325	68
17132333	17132333	130
17132341	17132341	128
85407708	85407708	132
85634764	85634764	158
85634764	85634764	154
85635076	85635076	34
17132416	17132416	178
85635084	85635084	36
85635092	85635092	36
17132432	17132432	174
17132432	17132432	174
17132440	17132440	174
17132465	17132465	176
17132473	17132473	174
17132481	17132481	90
17132481	17132481	88
17132499	17132499	176
17132507	17132507	176
17132515	17132515	174
17132523	17132523	174
17132523	17132523	174

Part number	Order number	Page
17132549	17132549	132
17132556	17132556	172
17132564	17132564	170
17132572	17132572	174
17132622	17132622	90
17132622	17132622	88
17132630	17132630	170
17132697	17132697	178
17132705	17132705	170
17132739	17132739	170
17132747	17132747	192
17132762	17132762	128
17132770	17132770	132
85638690	85638690	26
17132788	17132788	196
85635217	85635217	30
85635217	85635217	26
85407922	85407922	102
85635241	85635241	122
85638708	85638708	234
85638708	85638708	270
85407963	85407963	24
85407971	85407971	24
85408045	85408045	24
85408060	85408060	22
85408078	85408078	24
85408136	85408136	74
85408177	85408177	18
85408201	85408201	16
85635308	85635308	168

Part number	Order number	Page
17132796	17132796	248
17132804	17132804	254
85410942	85410942	166
85411437	85411437	220
85411437	85411437	256
17132812	17132812	200
85635316	85635316	216
17132820	17132820	196
17132820	17132820	218
85635332	85635332	192
85408227	85408227	124
17132838	17132838	196
85635365	85635365	26
85636892	85636892	148
85503498	85503498	256
85503506	85503506	256
85504017	85504017	158
85503977	85503977	158
85506541	85506541	212
85630663	85630663	214
85506558	85506558	212
85506533	85506533	208
85636942	85636942	148
85503993	85503993	272
85503993	85503993	236
85630721	85630721	214
85636959	85636959	146
85504033	85504033	140
85635399	85635399	202
17132846	17132846	164

Index

Part number	Order number	Page
85635415	85635415	164
17132853	17132853	170
85635621	85635621	122
17132879	17132879	178
85638906	85638906	98
85638971	85638971	22
85635704	85635704	26
85635712	85635712	22
85638989	85638989	262
85638989	85638989	226
85638997	85638997	270
85638997	85638997	234
85639003	85639003	270
85639003	85639003	234
85639011	85639011	270
85639011	85639011	234
17132911	17132911	192
17132929	17132929	192
17132937	17132937	192
17132945	17132945	192
17132994	17132994	192
85408334	85408334	124
85408391	85408391	158
85408391	85408391	154
85623833	85623833	18
85623833	85623833	24
85502235	85502235	74
17133018	17133018	178
85427938	85427938	178
85408573	85408573	200

Part number	Order number	Page
85408581	85408581	218
85635803	85635803	192
85635803	85635803	36
85504223	85504223	272
85504223	85504223	236
85408615	85408615	158
85506061	85506061	122
85408656	85408656	158
85408664	85408664	270
85408664	85408664	234
85413284	85413284	198
85408706	85408706	232
85408706	85408706	268
85412542	85412542	268
85412542	85412542	232
85415388	85415388	270
85415388	85415388	234
85408854	85408854	158
85408896	85408896	16
85408896	85408896	24
85408896	85408896	268
85408896	85408896	250
85408896	85408896	232
85506608	85506608	268
85506608	85506608	24
85506608	85506608	250
85506608	85506608	232
85408938	85408938	18
85427268	85427268	30
85427268	85427268	28

Part number	Order number	Page
85499663	85499663	122
17133034	17133034	198
17133042	17133042	198
17133059	17133059	198
85635852	85635852	36
85427276	85427276	30
85427276	85427276	28
85427029	85427029	198
85427029	85427029	32
85427029	85427029	28
85508570	85508570	150
85426112	85426112	142
85639045	85639045	268
85639045	85639045	232
85426138	85426138	142
85426146	85426146	142
85426120	85426120	142
85639052	85639052	270
85639052	85639052	234
85639060	85639060	268
85639060	85639060	232
85623809	85623809	214
85635886	85635886	178
85504272	85504272	148
85635894	85635894	154
85635902	85635902	154
85636017	85636017	192
85505154	85505154	142
85639086	85639086	124
85639094	85639094	124

Index

Part number	Order number	Page
85626828	85626828	162
85626828	85626828	160
17133067	17133067	184
85627495	17133687	158
17133687	17133687	158
85631422	85631422	158
85631422	85631422	122
17133075	17133075	202
17133083	17133083	170
17133091	17133091	178
17133109	17133109	182
17133117	17133117	178
85636991	85636991	140
17133133	17133133	178
17133141	17133141	178
85411569	85411569	138
85636140	85636140	144
17133166	17133166	220
17133166	17133166	256
85636165	85636165	202
85636173	85636173	202
85411965	85411965	138
17133174	17133174	138
85636223	85636223	202
17130691	17130691	138
17133208	17133208	256
85636256	85636256	202
85636264	85636264	156
85636264	85636264	138
85636306	85636306	152

Part number	Order number	Page
17133224	17133224	138
85409050	85409050	90
85409050	85409050	88
85409068	85409068	66
85409076	85409076	66
85409084	85409084	178
85409118	85409118	178
85409175	85409175	132
85626356	85626356	126
85639326	85639326	126
85429744	85429744	176
85509735	85509735	60
85409209	85409209	10
85429553	85429553	190
85429959	85429959	242
85507911	85507911	188
85507911	85507911	186
85507911	85507911	184
85507911	85507911	182
85507911	85507911	180
85507911	85507911	126
85509743	85509743	60
85430585	85430585	266
85430585	85430585	230
85507929	85507929	126
17133240	17133240	176
85409217	85409217	132
85409225	85409225	134
85409233	85409233	134
85409241	85409241	134

Part number	Order number	Page
85636363	85636363	190
85636371	85636371	60
85636389	85636389	194
85636389	85636389	188
85636389	85636389	184
85636389	85636389	182
85636389	85636389	180
85636389	85636389	176
85636389	85636389	158
85636389	85636389	266
85636389	85636389	230
85631547	85631547	266
85631547	85631547	230
85636397	85636397	58
85636454	85636454	178
85639391	85639391	124
85639425	85639425	264
85639425	85639425	228
17133257	17133257	176
17133265	17133265	178
17133273	17133273	178
17133281	17133281	178
17133299	17133299	178
17133315	17133315	192
85500536	85500536	52
85509222	85509222	64
85409258	85409258	10
85492551	85492551	10
85409266	85409266	242
85409274	85409274	58

Index

Part number	Order number	Page
85409282	85409282	58
85426377	85426377	242
85409290	85409290	242
85409308	85409308	10
85428217	85428217	90
85428217	85428217	88
85409316	85409316	52
85409332	85409332	242
85427110	85427110	46
85625010	85625010	242
17133323	17133323	90
17133323	17133323	88
85417756	85417756	10
85412922	85412922	50
85409399	85409399	50
85409407	85409407	12
85409415	85409415	12
85501872	85501872	14
85409423	85409423	46
85409456	85409456	46
85426385	85426385	250
85426385	85426385	50
85509750	85509750	50
17133331	17133331	104
85504207	85504207	146
85504207	85504207	272
85504207	85504207	236
85409514	85409514	62
85409514	85409514	58
85409514	85409514	242

Part number	Order number	Page
85509727	85509727	62
85509271	85509271	94
85509271	85509271	82
85509271	85509271	252
85623841	85623841	46
85410298	85410298	10
85410298	85410298	52
85409522	85409522	58
17133349	17133349	110
17133349	17133349	110
17133364	17133364	102
85631802	85631802	242
85416436	85416436	62
85416436	85416436	58
85416436	85416436	242
85416444	85416444	46
85409597	85409597	10
85426393	85426393	250
85509156	85509156	12
17133372	17133372	48
85639474	85639474	48
85639482	85639482	48
85506467	85506467	94
85500213	85500213	96
85503837	85503837	94
85639557	85639557	94
85636603	85636603	158
85636603	85636603	152
22207054	22207054	94
85639573	85639573	136

Part number	Order number	Page
85639599	85639599	128
17133406	17133406	92
17133414	17133414	84
85639680	85639680	180
85636660	85636660	176
85636660	85636660	158
85636660	85636660	154
85632016	85632016	116
85400851	85400851	8
85401131	85401131	8
85401180	85401180	8
85400893	85400893	8
85401099	85401099	8
85401164	85401164	8
85626653	85626653	8
85621373	85621373	8
85639714	85639714	8
85639722	85639722	8
85628030	85628030	8
85402451	85402451	40
85402451	85402451	246
85425593	85425593	40
85425593	85425593	246
85425585	85425585	40
85425585	85425585	246
85425908	85425908	40
85425908	85425908	246
85425932	85425932	40
85425932	85425932	246
85508794	85508794	40

Index

Part number	Order number	Page
85508794	85508794	246
85508869	85508869	40
85508869	85508869	246
85508901	85508901	40
85508901	85508901	246
85508950	85508950	40
85508950	85508950	246
85509008	85509008	40
85509008	85509008	246
85509057	85509057	40
85509057	85509057	246
85509107	85509107	40
85509107	85509107	246
85620508	85620508	8
85400786	85400786	14
85400737	85400737	14
85501229	85501229	14
85501294	85501294	14
85507622	85507622	212
85402519	85402519	158
85636983	85636983	208
85620235	85620235	208
85504264	85504264	146
85504199	85504199	158
85504215	85504215	146
85504215	85504215	272
85504215	85504215	236
17135476	17135476	158
17135484	17135484	158
85503522	85503522	158

Part number	Order number	Page
85426047	85426047	50
85426013	85426013	50
17133471	17133471	50
85639896	85639896	52
17133521	17133521	52
17133554	17133554	52
17133562	17133562	50
17133570	17133570	52
17133612	17133612	50
17133620	17133620	52
85410108	85410108	12
85636694	85636694	154
17130006	17130006	268
17130006	17130006	232
85632206	85632206	242
17131160	17131160	266
17131160	17131160	230
17133653	17133653	176
85410140	85410140	176
85410157	85410157	126
85636728	85636728	190
85429967	85429967	266
85429967	85429967	242
85429967	85429967	230
85636736	85636736	188
85636736	85636736	186
85636736	85636736	184
85636736	85636736	180
85429793	85429793	182
85429793	85429793	126

Part number	Order number	Page
85430213	85430213	176
85430213	85430213	60
85429728	85429728	266
85429728	85429728	230
85410165	85410165	10
85430171	85430171	60