INGERSOLL-RAND

G 20

PARTS MANUAL

17131210

Doosan purchased Bobcat Company from Ingersoll-Rand Company in 2007. Any reference to Ingersoll-Rand Company or use of trademarks, service marks, logos, or other proprietary identifying marks belonging to Ingersoll-Rand Company in this manual is historical or nominative in nature, and is not meant to suggest a current affiliation between Ingersoll-Rand Company and Doosan Company or the products of either.

G 20 EDITION:02/04/2004

33519016501

Revised (01-13)

G020

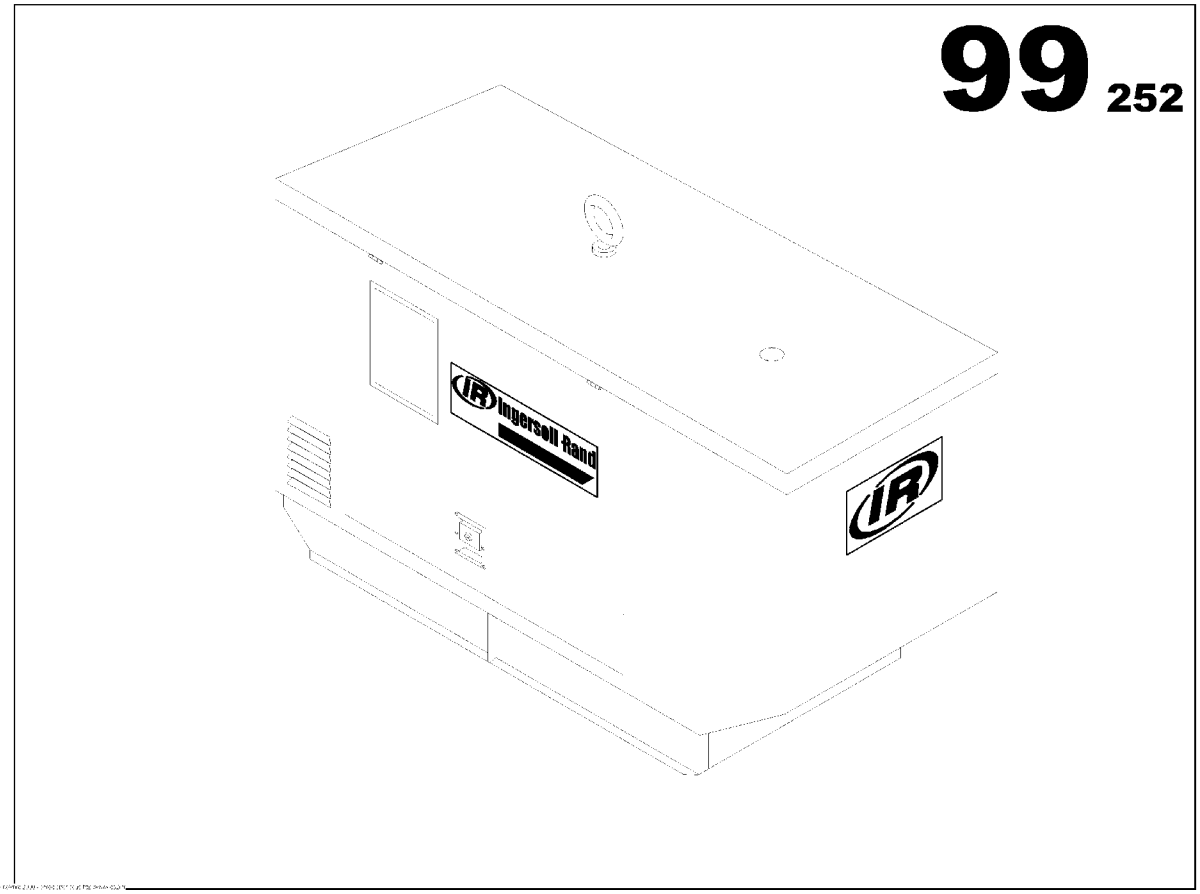

G020

Part numbers listed are only parts used in this model

Item	Part No.	Description	Qty	Un	From SN	To SN	Order PN	Page
1		G020 *-Basic Version*	1	U N				3
2	54602800	OIL SUMP DRAIN PUMP KIT	1	UN			54602800	133
3	17130139	3 WAY FUEL VALVE KIT	1	UN			17130139	137
4	85507762	FUEL PREFILTER KIT	1	UN			85507762	141

G020

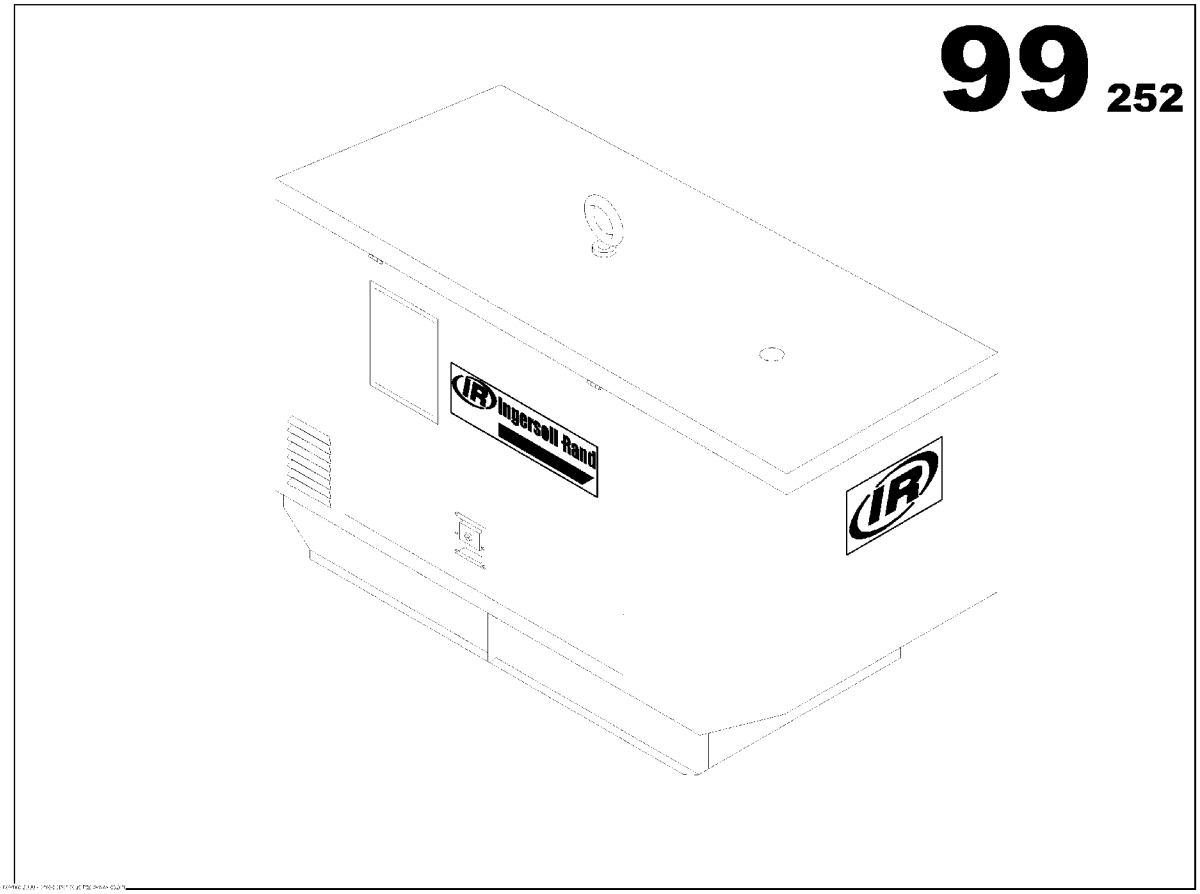

G020

Part numbers listed are only parts used in this model

Item	Part No.	Description	Qty	Un	From SN	To SN	Order PN	Page
1		ENGINE FUNCTION	1	UN				5
2		ALTERNATOR FUNCTION	1	UN				27
3		COOLER FUNCTION	1	UN				35
4		FUEL FUNCTION	1	UN				43
5		STARTING FUNCTION	1	UN				57
6		EXHAUST FUNCTION	1	UN				63
7		FRAME FUNCTION	1	UN				69
8		CANOPY FONCTION	1	UN				83
9		ELECTRICAL FUNCTION	1	UN				97
10		POWER CONNECTION BLOCK FUNCTION	1	UN				113

ENGINE FUNCTION

Non illustré
Not illustrated

ENGINE FUNCTION

Part numbers listed are only parts used in this model

Item	Part No.	Description	Qty	Un	From SN	To SN	Order PN	Page
1		ENGINE MITSUBISHI S4L2 SAE 5/7.5	1	UN				7
2	85414613	AIR FILTER HEAVY DUTY ASSEMBLY	1	UN			85414613	11
3	85496982	WATER TEMPERATURE OIL PRESSURE SECURITY ASSEMBLY *-Provided with the Engine*	1	UN			85496982	
4	85414688	FUEL ANS SUMP DRAIN HOSES ASSEMBLY	1	UN			85414688	15
5		ENGINE WIRING FUNCTION	1	UN				17

ENGINE MITSUBISHI S4L2 SAE 5/7.5

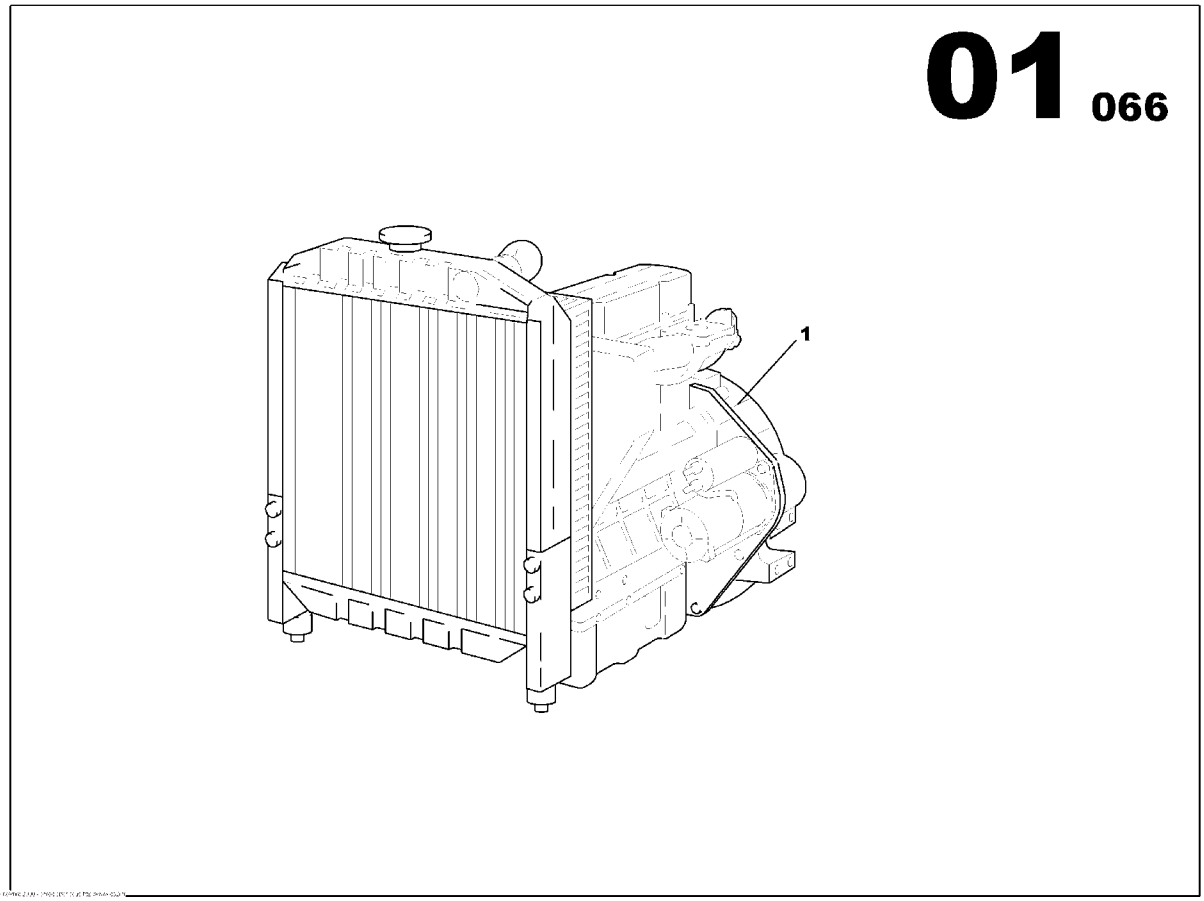

ENGINE MITSUBISHI S4L2 SAE 5/7.5

Part numbers listed are only parts used in this model

Item	Part No.	Description	Qty	Un	From SN	To SN	Order PN	Page
1	85496495	ENGINE MITSUBISHI S4L2 SAE 5/7.5	1	UN			85496495	9

ENGINE MITSUBISHI S4L2 SAE 5/7.5

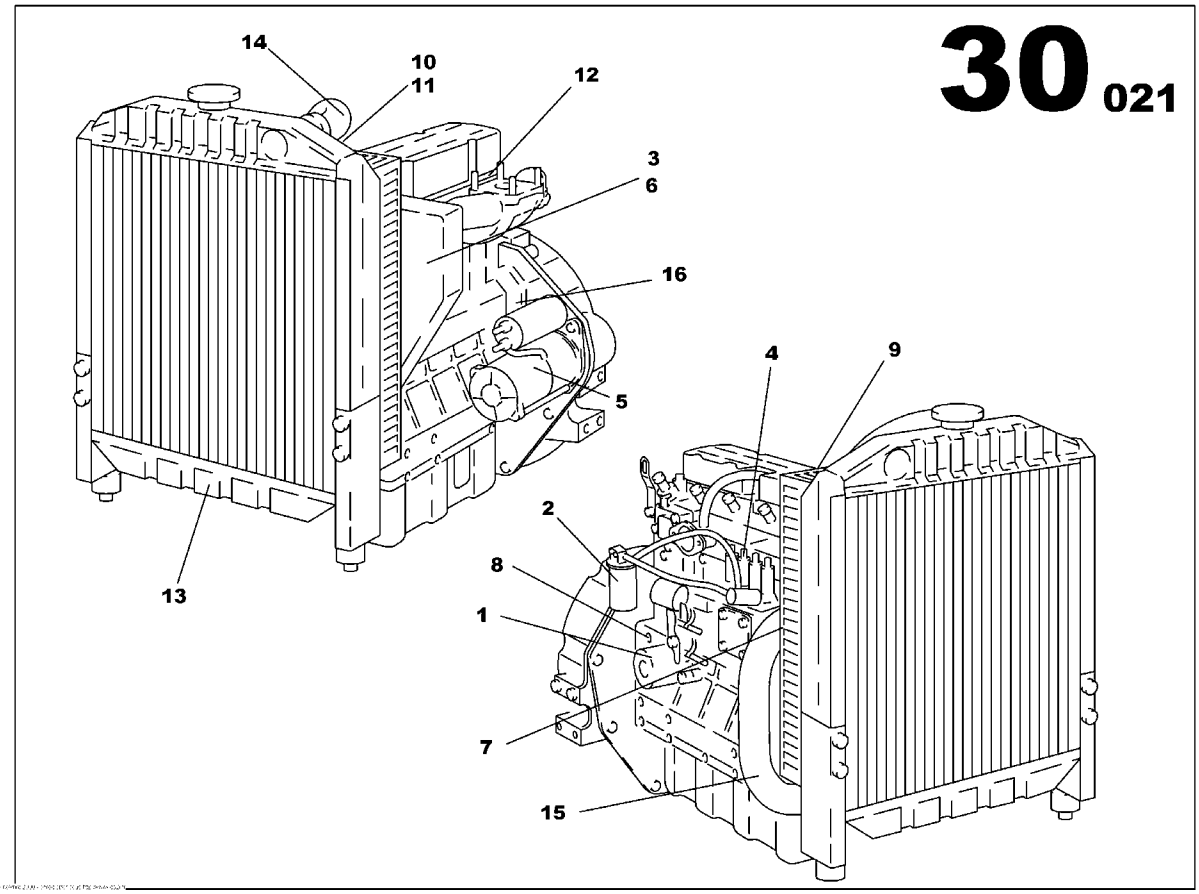

ENGINE MITSUBISHI S4L2 SAE 5/7.5
85496495

Part numbers listed are only parts used in this model

Item	Part No.	Description	Qty	Un	From SN	To SN	Order PN	Page
1	85621522	STARTER	1	UN			85621522	
2		SEAL	1	UN				
3	85400091	THERMOSTAT	1	UN			85400091	
4	85400182	OIL FILTER	1	UN			85400182	
5	85621555	BELT	1	UN			85621555	
6	85400208	ROCKER COVER GASKET	1	UN			85400208	
7	85400216	INJECTOR	4	UN			85400216	
8	85400240	PRESSURE SWITCH *Engine serial Number <4692-*	1	UN			85400240	
8	85508182	PRESSURE SWITCH *Engine serial Number>4691-*	1	UN			85508182	
9	85400299	WATER PUMP	1	UN			85400299	
10	85400349	THERMOSTAT SEAL	1	UN			85400349	
11	85426252	TEMPERATURE SWITCH	1	UN			85426252	
12	85426054	RADIATOR	1	UN			85426054	
13	85425569	RADIATOR TOP HOSE	1	UN			85425569	
14	85401321	RADIATOR BOTTOM HOSE	1	UN			85401321	
15	85491546	CHARGING ALTERNATOR	1	UN			85491546	

AIR FILTER HEAVY DUTY ASSEMBLY

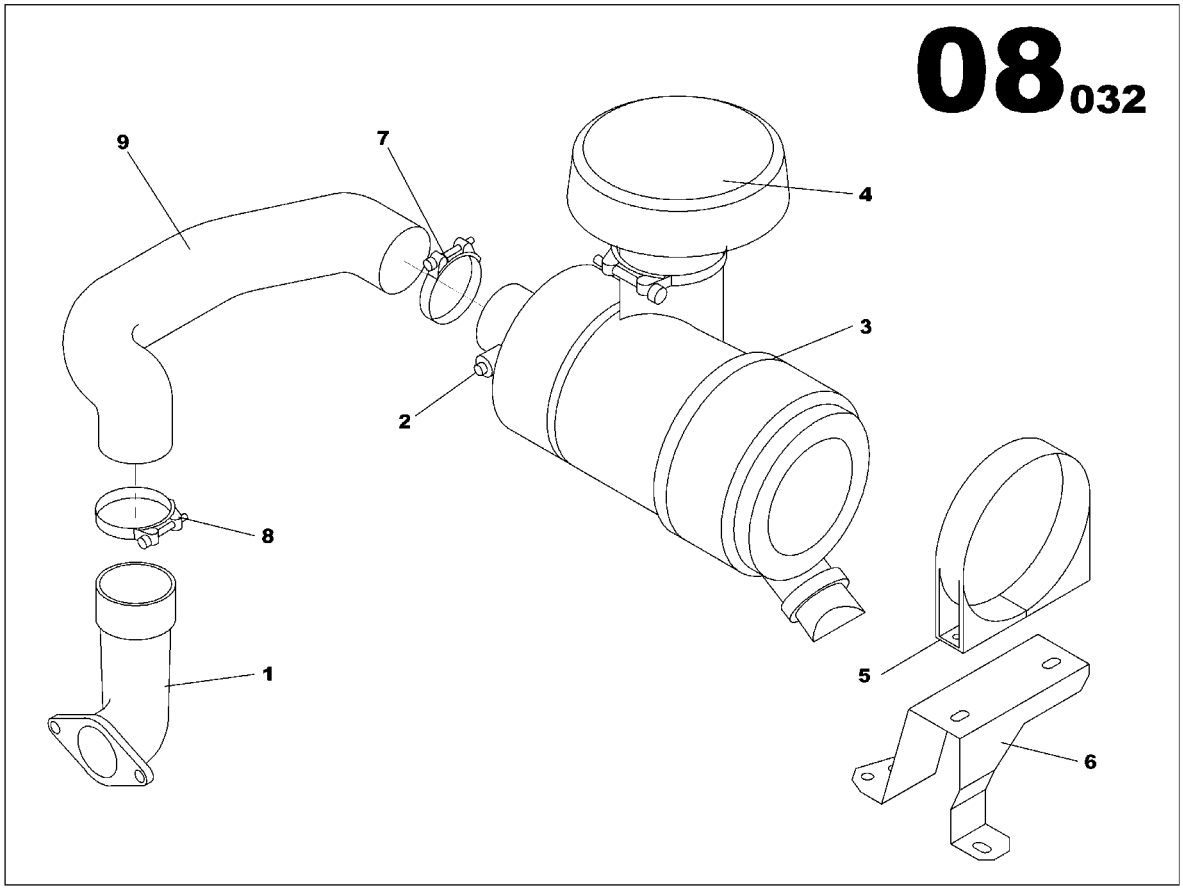

AIR FILTER HEAVY DUTY ASSEMBLY
85414613

Part numbers listed are only parts used in this model

Item	Part No.	Description	Qty	Un	From SN	To SN	Order PN	Page
1	85416386	AIR FILTER INLET PIPE	1	UN			85416386	
2	85413581	AIR RESTRICTION INDICATOR	1	UN			85413581	
3	85413433	AIR FILTER HEAVY DUTY	1	UN			85413433	13
4	85412823	RAIN CAP	1	UN			85412823	
5	85412880	CLAMP D146	1	UN			85412880	
6	85425379	AIR FILTER BRACKET MI S4L2	1	UN			85425379	
7	85412922	HOSE CLIP D50/70	1	UN			85412922	
8	85409399	HOSE CLIP D60/80	1	UN			85409399	
9	85429587	RUBBER HOSE ELBOW D57	1	UN			85429587	

AIR FILTER HEAVY DUTY

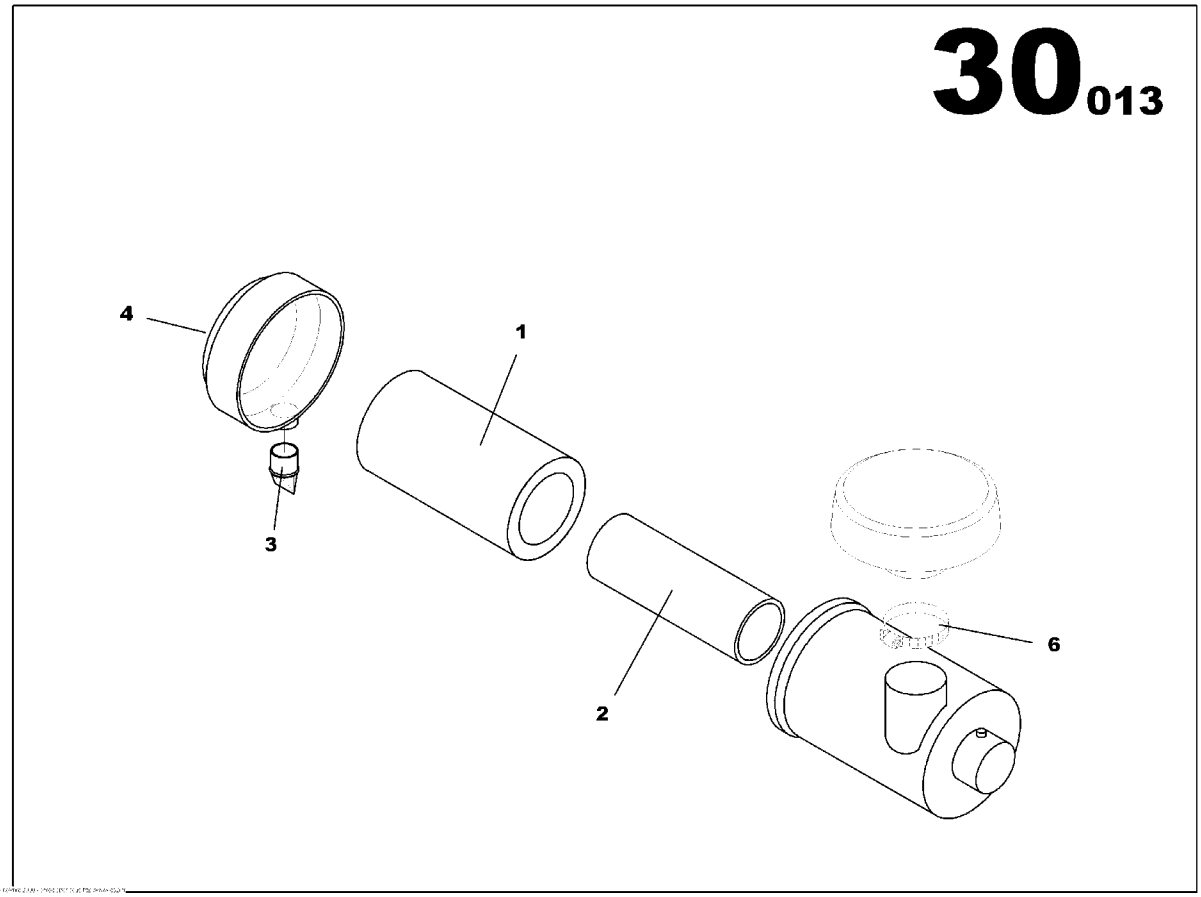

AIR FILTER HEAVY DUTY
85413433

Part numbers listed are only parts used in this model

Item	Part No.	Description	Qty	Un	From SN	To SN	Order PN	Page
1	85400646	AIR FILTER ELEMENT	1	UN			85400646	
2	85400695	AIR FILTER ELEMENT	1	UN			85400695	
3	85501252	VACUATOR VALVE	1	UN			85501252	
4	85501278	DUST CUP	1	UN			85501278	
6	85500544	HOSE CLIP D40/60	1	UN			85500544	

FUEL ANS SUMP DRAIN HOSES ASSEMBLY

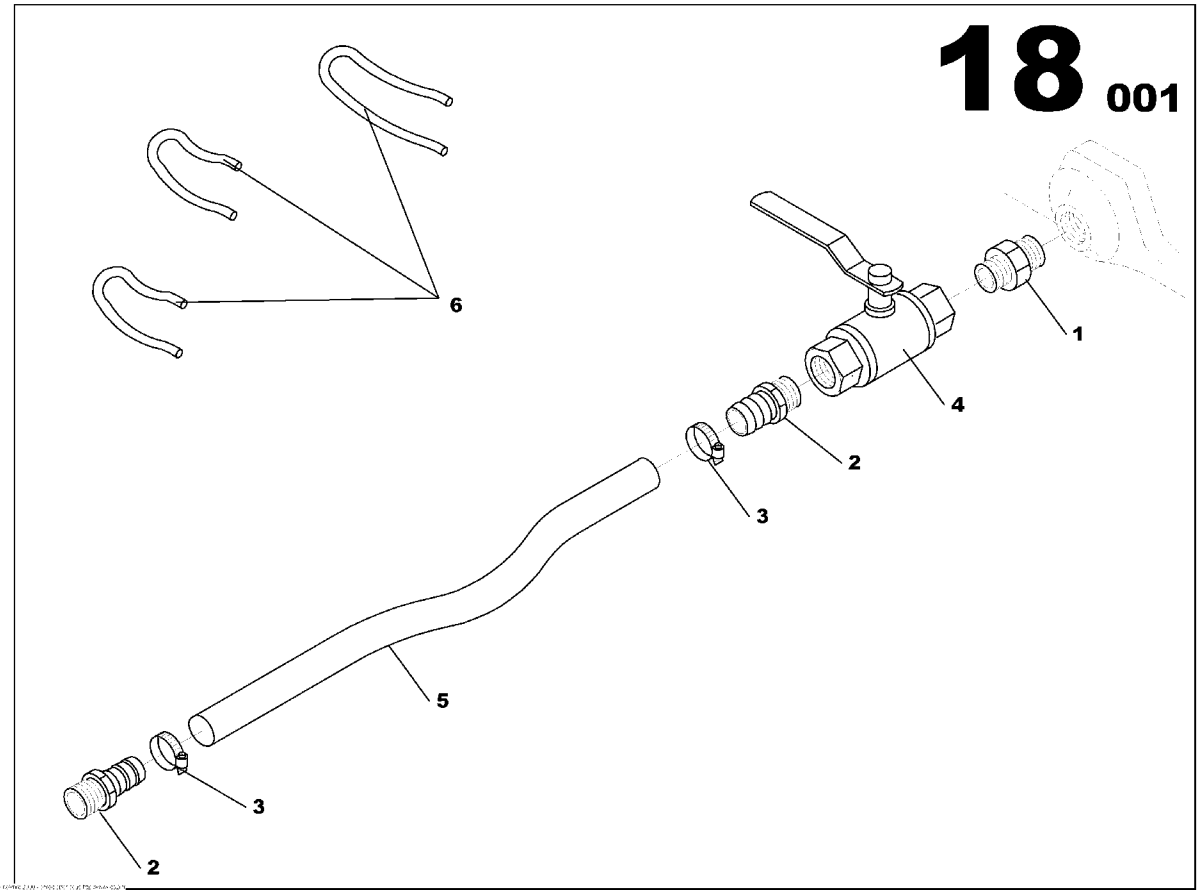

FUEL ANS SUMP DRAIN HOSES ASSEMBLY
85414688

Part numbers listed are only parts used in this model

Item	Part No.	Description	Qty	Un	From SN	To SN	Order PN	Page
1	85415701	PIPE UNION REDUCER MAL/MAL M14x150 3/8G	1	UN			85415701	
2	85415719	PIPE UNION REDUCER MAL/MAL 3/8G D12	2	UN			85415719	
3	85412914	HOSE CLIP D12/22	2	UN			85412914	
4	85416451	2 WAY VALVE	1	UN			85416451	
5	85416444	FLEXIBLE HOSE D12x19	1	ML			85416444	
6	85416428	FLEXIBLE HOSE D5.5	0.4	ML			85416428	
6	85416428	FLEXIBLE HOSE D5.5	0.5	ML			85416428	
6	85416428	FLEXIBLE HOSE D5.5	1.1	ML			85416428	

ENGINE WIRING FUNCTION

Non illustré
Not illustrated

ENGINE WIRING FUNCTION

Part numbers listed are only parts used in this model

Item	Part No.	Description	Qty	Un	From SN	To SN	Order PN	Page
1	85635233	ENGINE WIRING LOOM MI S3/S4L2	1	UN			85635233	19

ENGINE WIRING LOOM MI S3/S4L2

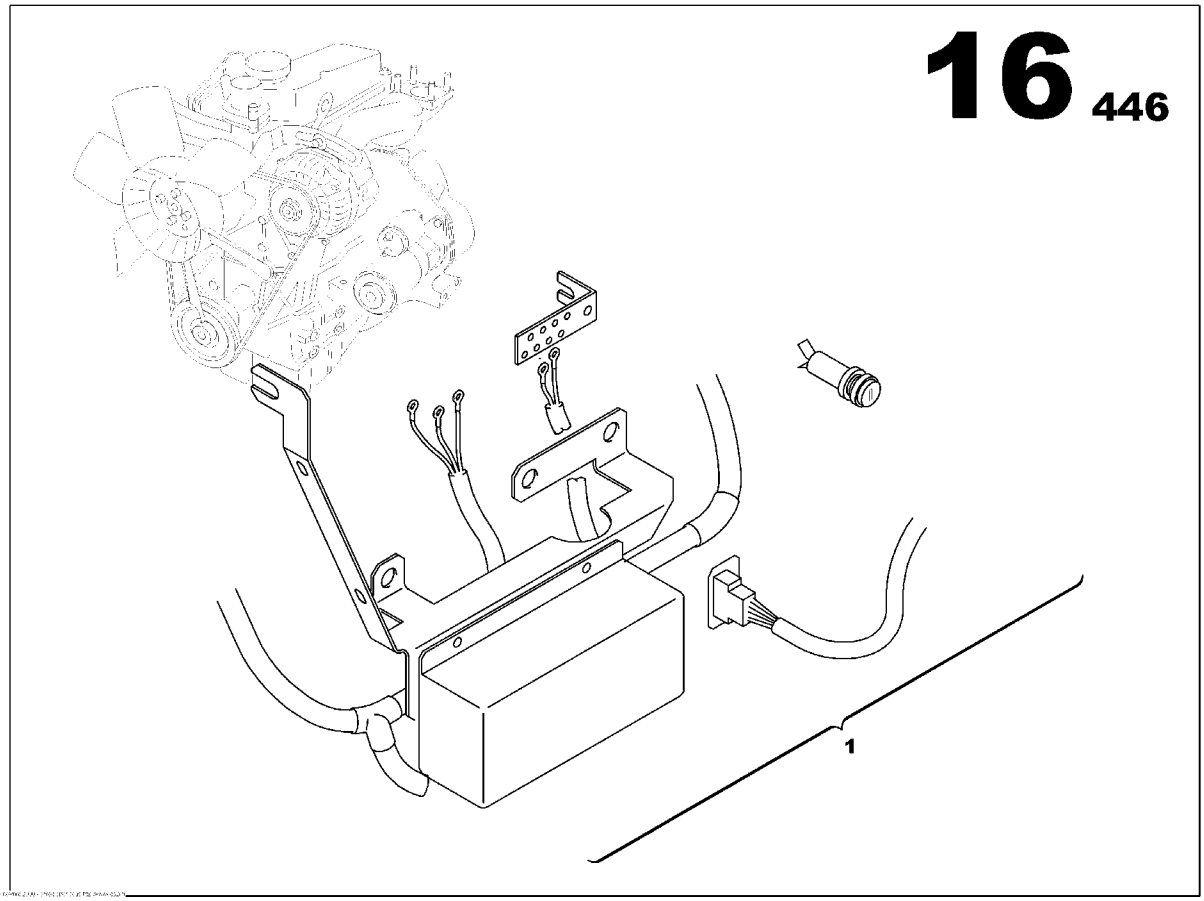

ENGINE WIRING LOOM MI S3/S4L2
85635233

Part numbers listed are only parts used in this model

Item	Part No.	Description	Qty	Un	From SN	To SN	Order PN	Page
1	85626943	ENGINE WIRING LOOM MI S3/S4L2	1	UN	02009426		85626943	21

ENGINE WIRING LOOM MI S3/S4L2

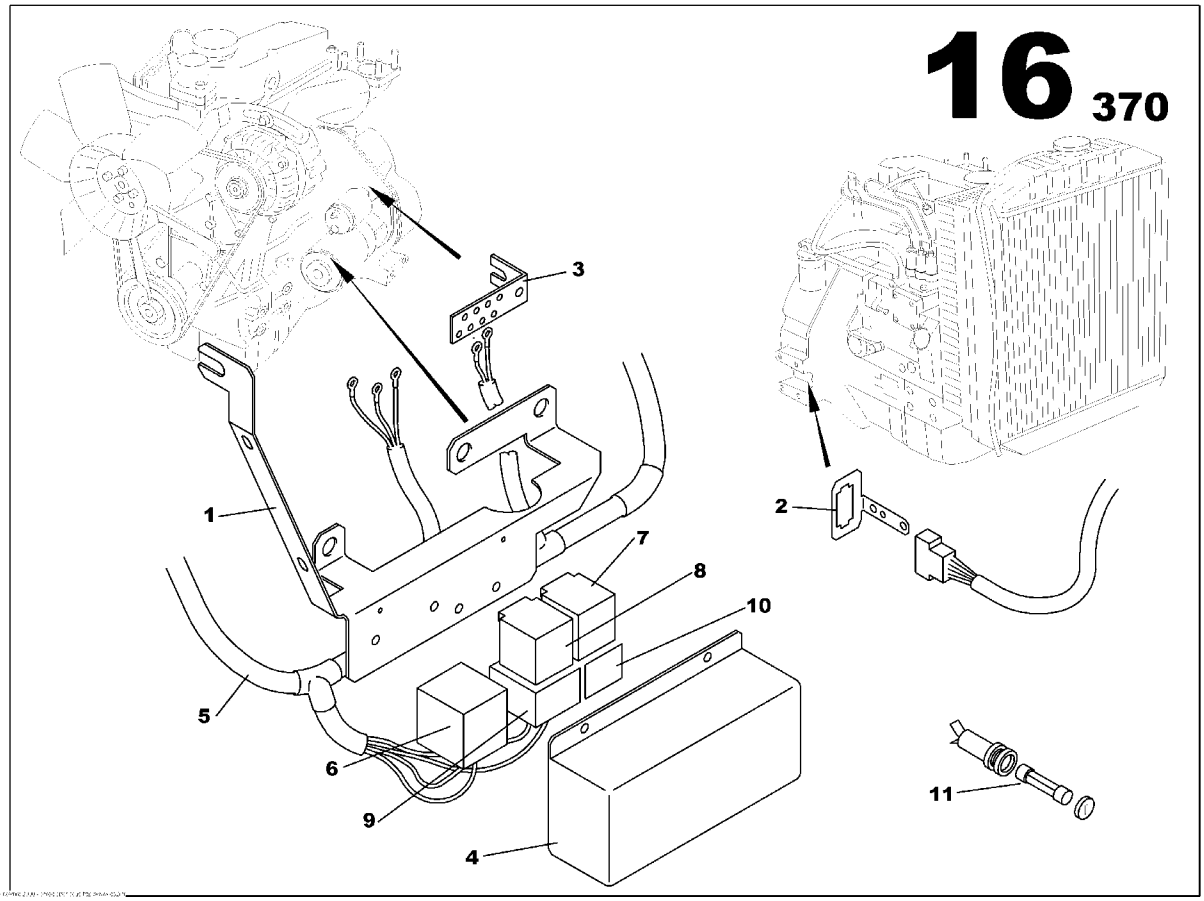

ENGINE WIRING LOOM MI S3/S4L2
85626943

Part numbers listed are only parts used in this model

Item	Part No.	Description	Qty	Un	From SN	To SN	Order PN	Page
1	85415941	WIRING BRACKET MI S3L2/S4L2	1	UN			85415941	
2	85407047	CONNECTOR BRACKET	1	UN			85407047	
3	85635266	COPPER BAR 5x25	1	UN			85635266	
4	85416279	STARTING RELAY PROTECTION PANEL	1	UN			85416279	
5	85635688	ENGINE WIRING LOOM MI S3/S4	1	UN			85635688	
6	85414191	MITSUBISHI RELAY ASSEMBLY	1	UN			85414191	23
7	85408888	RELAY 12V 70A WITH BRAKET	1	UN			85408888	
8	85408896	RELAY 12V 20/30A	1	UN			85408896	
9	85413292	AUTOMOBILE RELAY BASE	1	UN			85413292	
10	85408912	AUTOMOBILE RELAY BASE	1	UN			85408912	
11	85635878	FUSE HOUSING ASSEMBLY	1	UN			85635878	25

MITSUBISHI RELAY ASSEMBLY

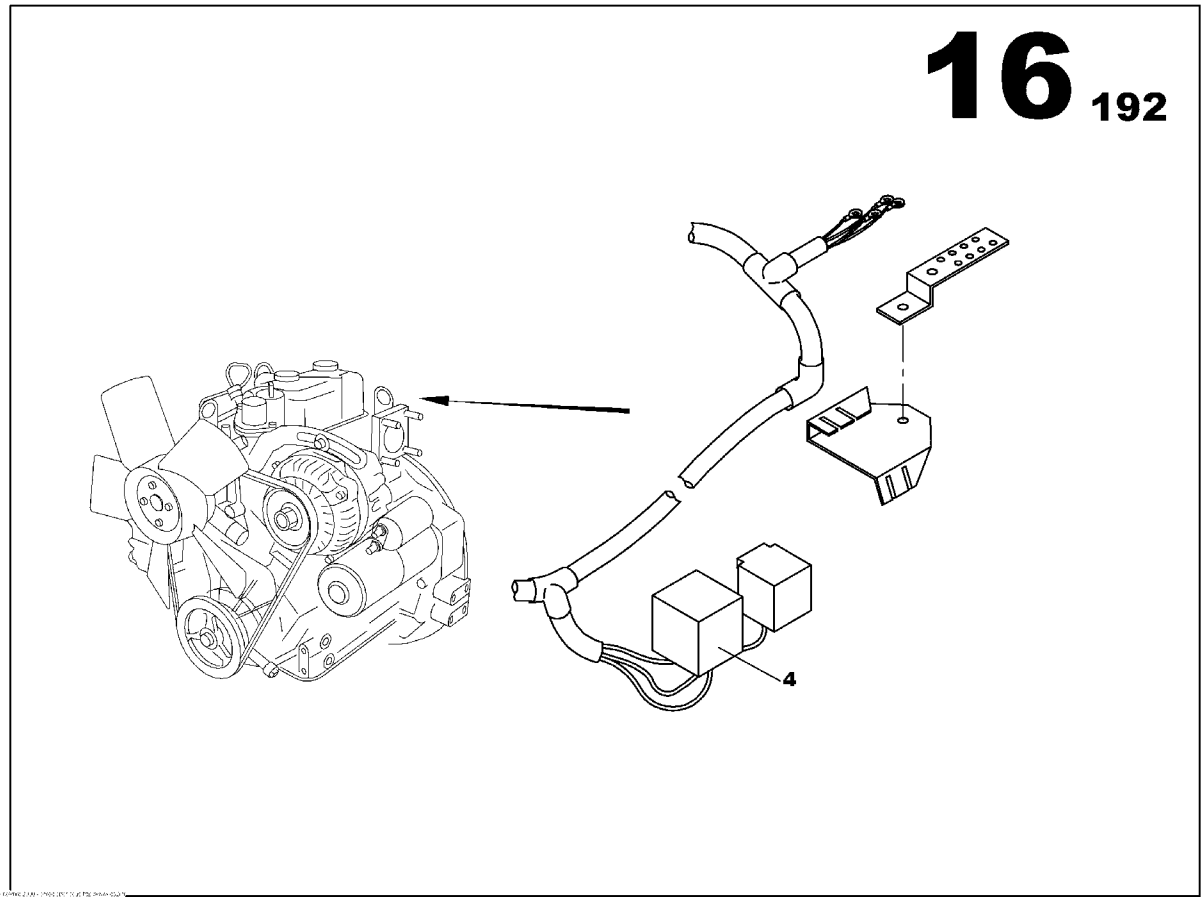

MITSUBISHI RELAY ASSEMBLY
85414191

Part numbers listed are only parts used in this model

Item	Part No.	Description	Qty	Un	From SN	To SN	Order PN	Page
4	85415792	STARTING RELAY	1	UN			85415792	

FUSE HOUSING ASSEMBLY

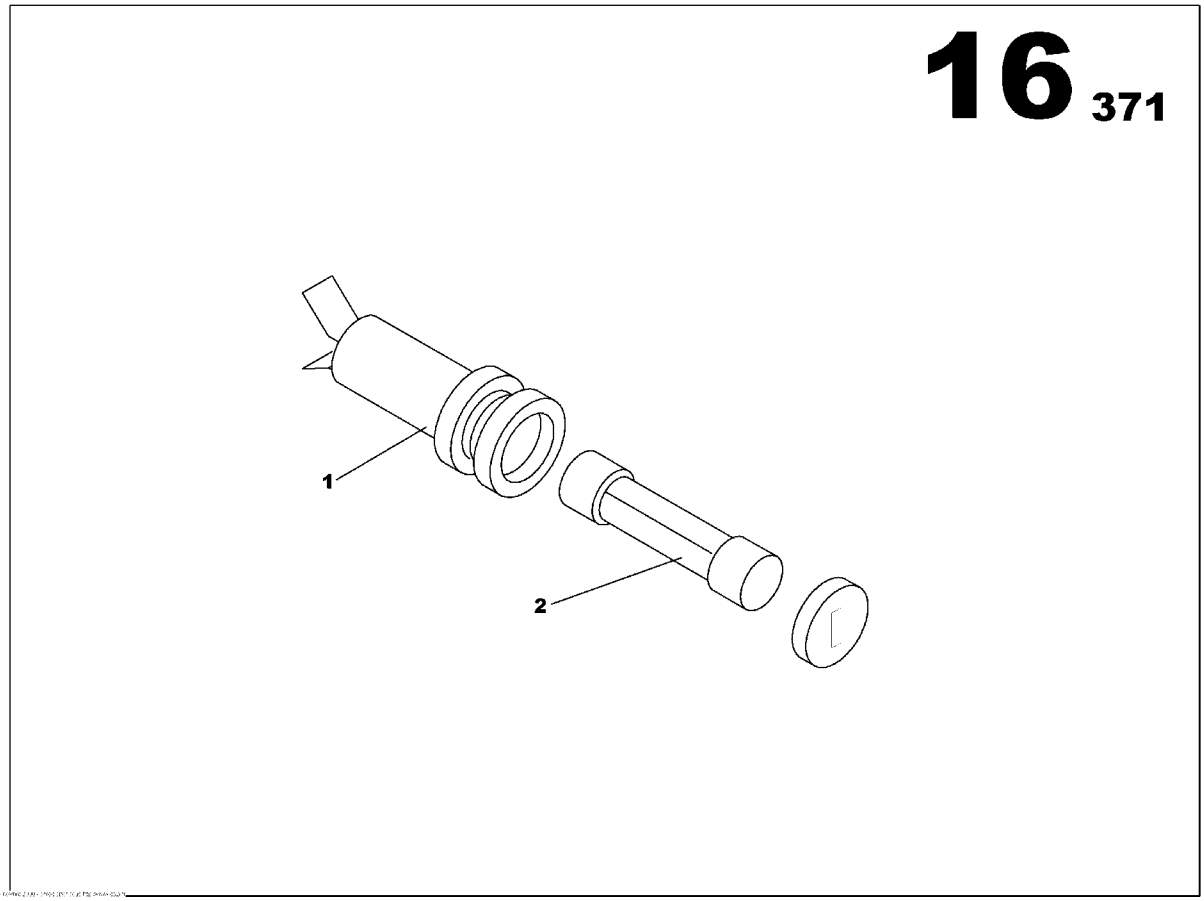

FUSE HOUSING ASSEMBLY
85635878

Part numbers listed are only parts used in this model

Item	Part No.	Description	Qty	Un	From SN	To SN	Order PN	Page
1	85635860	FUSE HOLDER 5x20	1	UN			85635860	
2	85636702	FUSE CYLINDRICAL 0.16A	1	UN			85636702	

ALTERNATOR FUNCTION

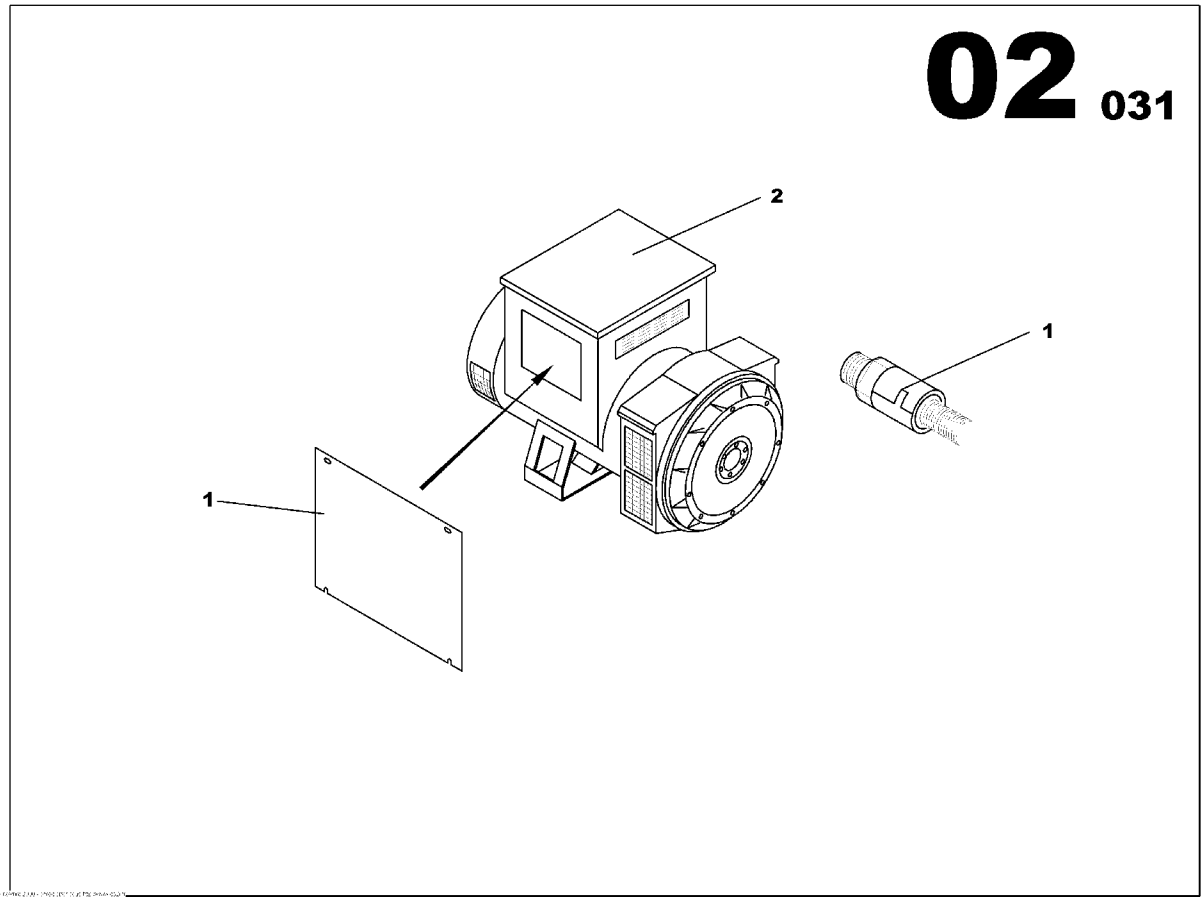

ALTERNATOR FUNCTION

Part numbers listed are only parts used in this model

Item	Part No.	Description	Qty	Un	From SN	To SN	Order PN	Page
1	85634772	OUTPUT CABLES ALTERNATOR ASSEMBLY	1	UN			85634772	29
2		ALTERNATOR	1	UN				31

OUTPUT CABLES ALTERNATOR ASSEMBLY

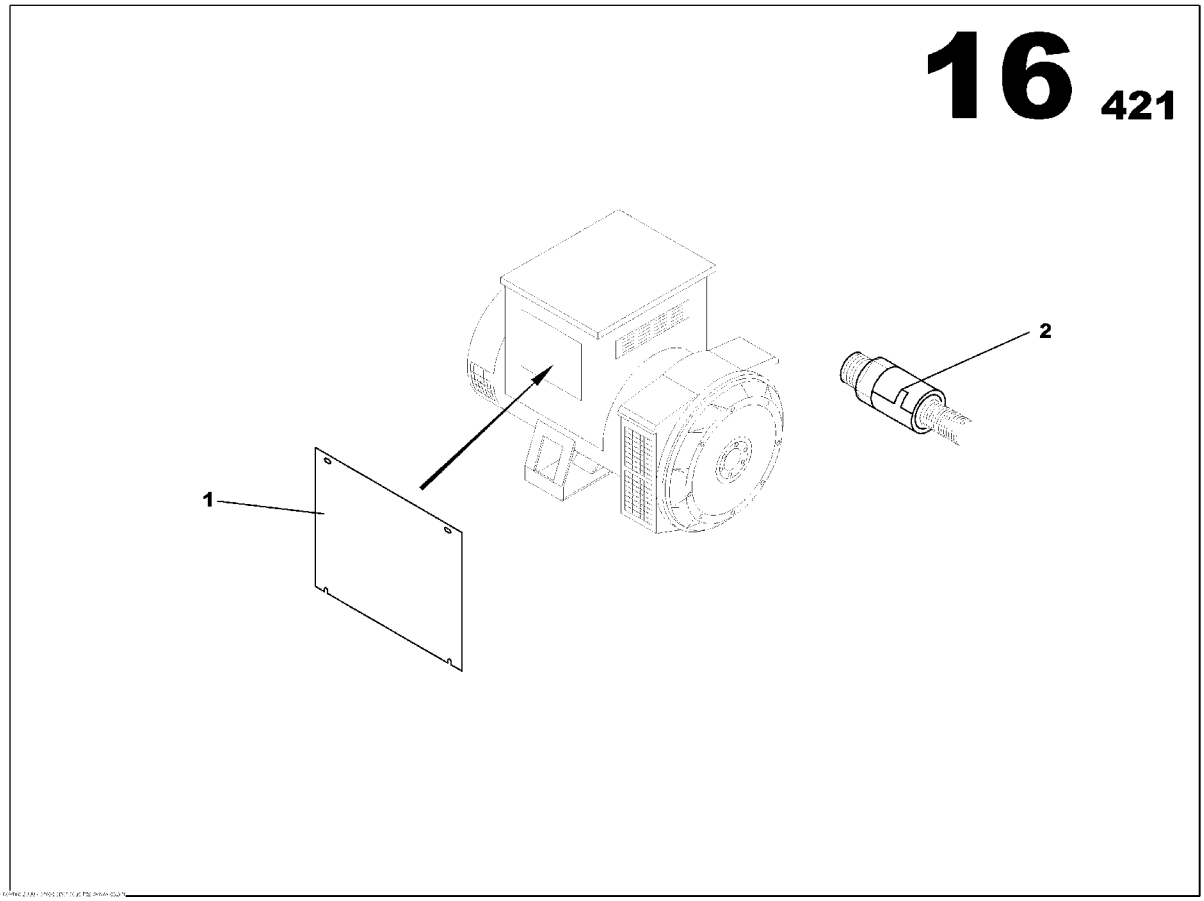

OUTPUT CABLES ALTERNATOR ASSEMBLY
85634772

Part numbers listed are only parts used in this model

Item	Part No.	Description	Qty	Un	From SN	To SN	Order PN	Page
1	85501435	CABLE OUTLET PLATE	1	UN			85501435	
2	85501575	PIPE UNION PG36	1	UN			85501575	

ALTERNATOR

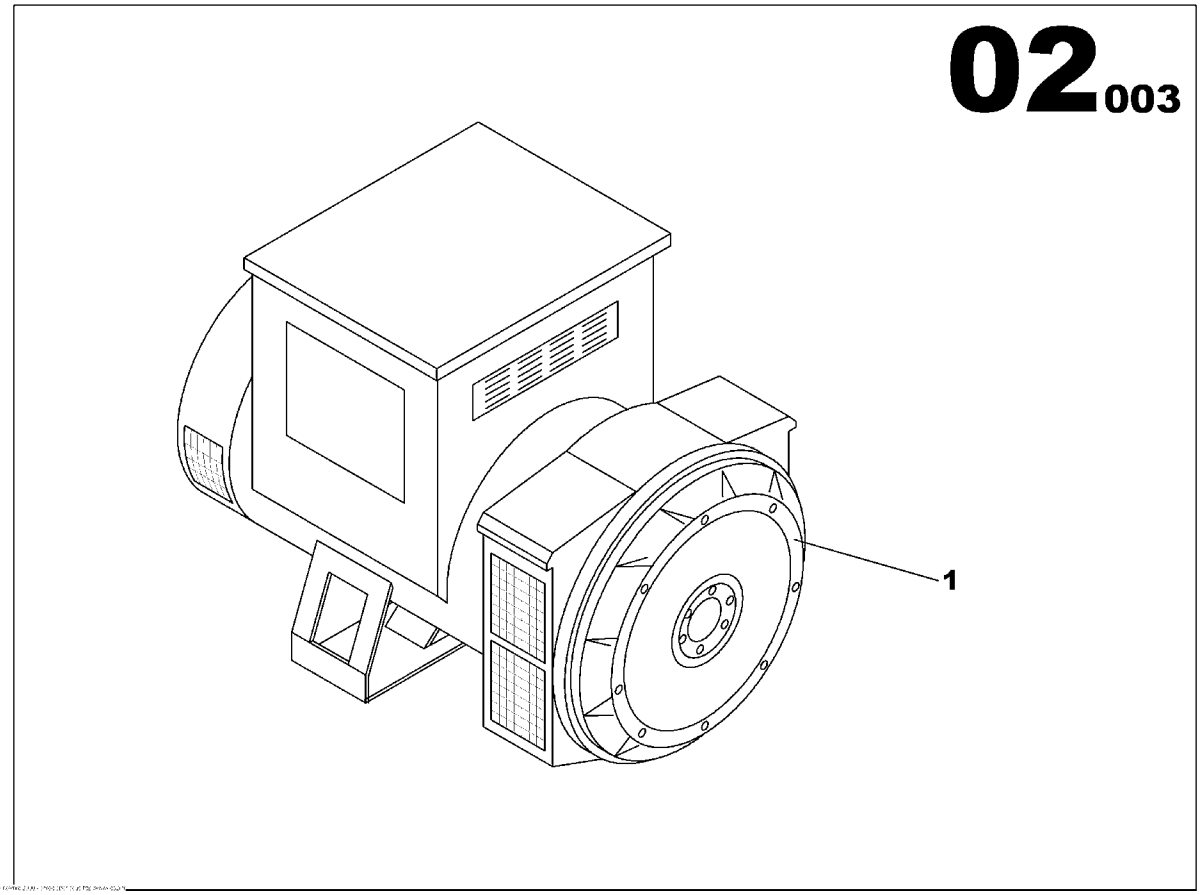

ALTERNATOR

Part numbers listed are only parts used in this model

Item	Part No.	Description	Qty	Un	From SN	To SN	Order PN	Page
1	85496552	ALTERNATOR LS 422S WITH SWITCH	1	UN			85496552	33

ALTERNATOR LS 422S WITH SWITCH

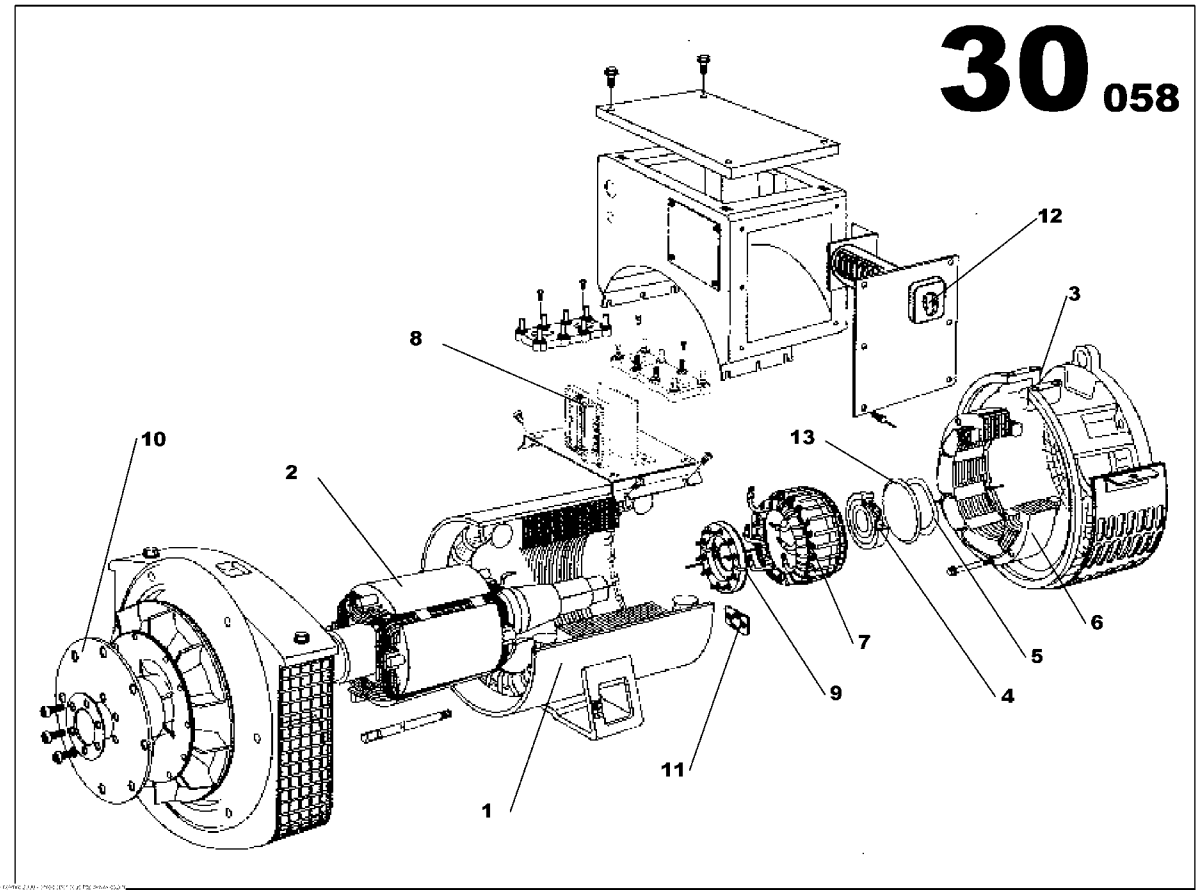

ALTERNATOR LS 422S WITH SWITCH
85496552

Part numbers listed are only parts used in this model

Item	Part No.	Description	Qty	Un	From SN	To SN	Order PN	Page
1	85508745	WOUND STATOR ASSEMBLY	1	UN			85508745	
2	85509073	WOUND ROTOR ASSEMBLY	1	UN			85509073	
3	85508851	N.D.E BRACKET	1	UN			85508851	
4	85425882	BEARING	1	UN			85425882	
5	85509032	WAVY WASHER	1	UN			85509032	
6	85508893	WOUND EXCITER FIELD	1	UN			85508893	
7	85508943	WOUND EXCITER ARMATURE	1	UN			85508943	
8	85402451	GOVERNOR	1	UN			85402451	
9	85425858	DIODE BRIDGE ASSEMBLY	1	UN			85425858	
10	85425965	DRIVE DISC LSA 422S5	1	UN			85425965	
11	85425866	SURGE SUPPRESSOR	1	UN			85425866	
12	85426435	VOLTAGE SELECTOR SWITCH	1	UN			85426435	
13	85508992	O RING	1	UN			85508992	

COOLER FUNCTION

Non illustré
Not illustrated

COOLER FUNCTION

Part numbers listed are only parts used in this model

Item	Part No.	Description	Qty	Un	From SN	To SN	Order PN	Page
1	85414837	RADIATOR MI S3/S4 ASSEMBLY	1	UN			85414837	37

RADIATOR MI S3/S4 ASSEMBLY

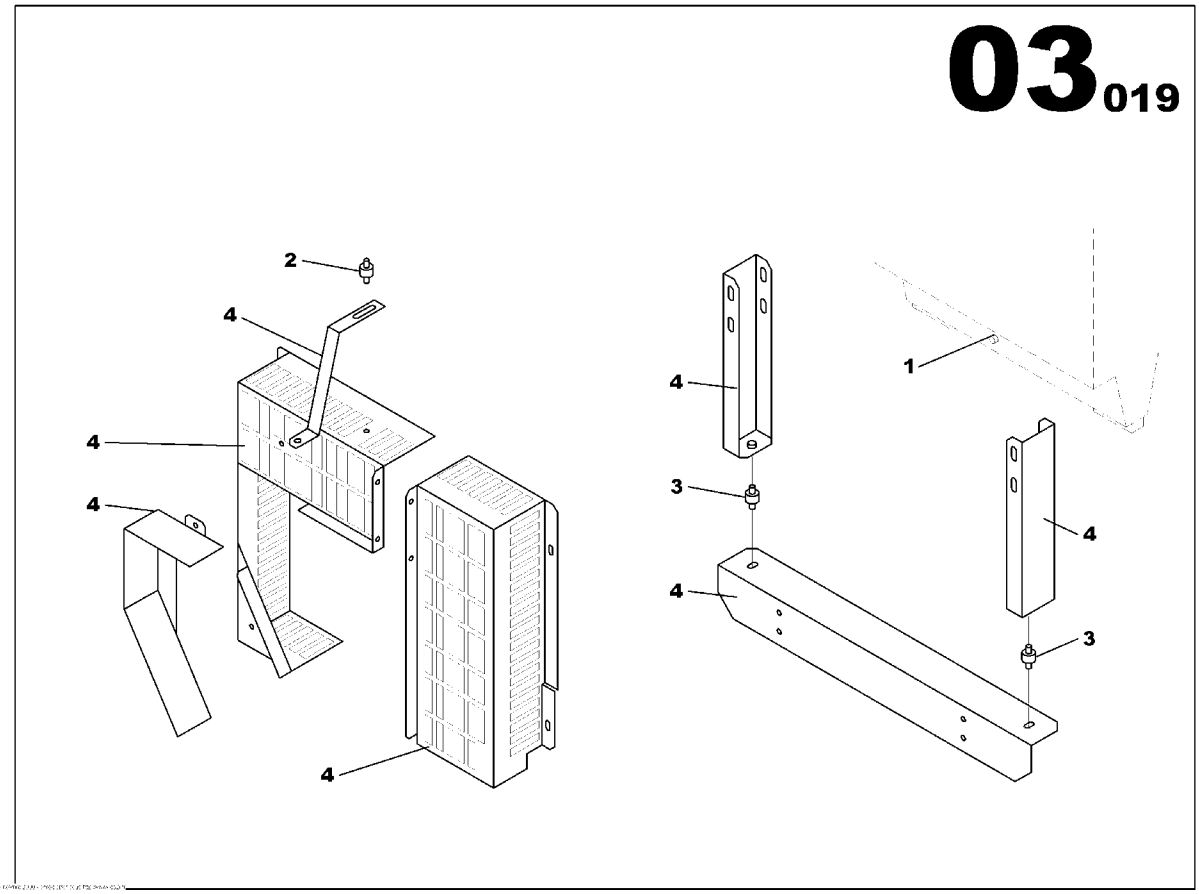

RADIATOR MI S3/S4 ASSEMBLY
85414837

Part numbers listed are only parts used in this model

Item	Part No.	Description	Qty	Un	From SN	To SN	Order PN	Page
1	85415214	RADIATOR DRAIN MI L2E/L3E ASSEMBLY	1	UN			85415214	39
2	85400018	ANTI-VIBRATION MOUNT D25 Th22	1	UN			85400018	
3	85400026	ANTI-VIBRATION MOUNT D40 Th28	2	UN			85400026	
4	85627487	FAN GUARD ASSEMBLY	1	UN			85627487	41

RADIATOR DRAIN MI L2E/L3E ASSEMBLY

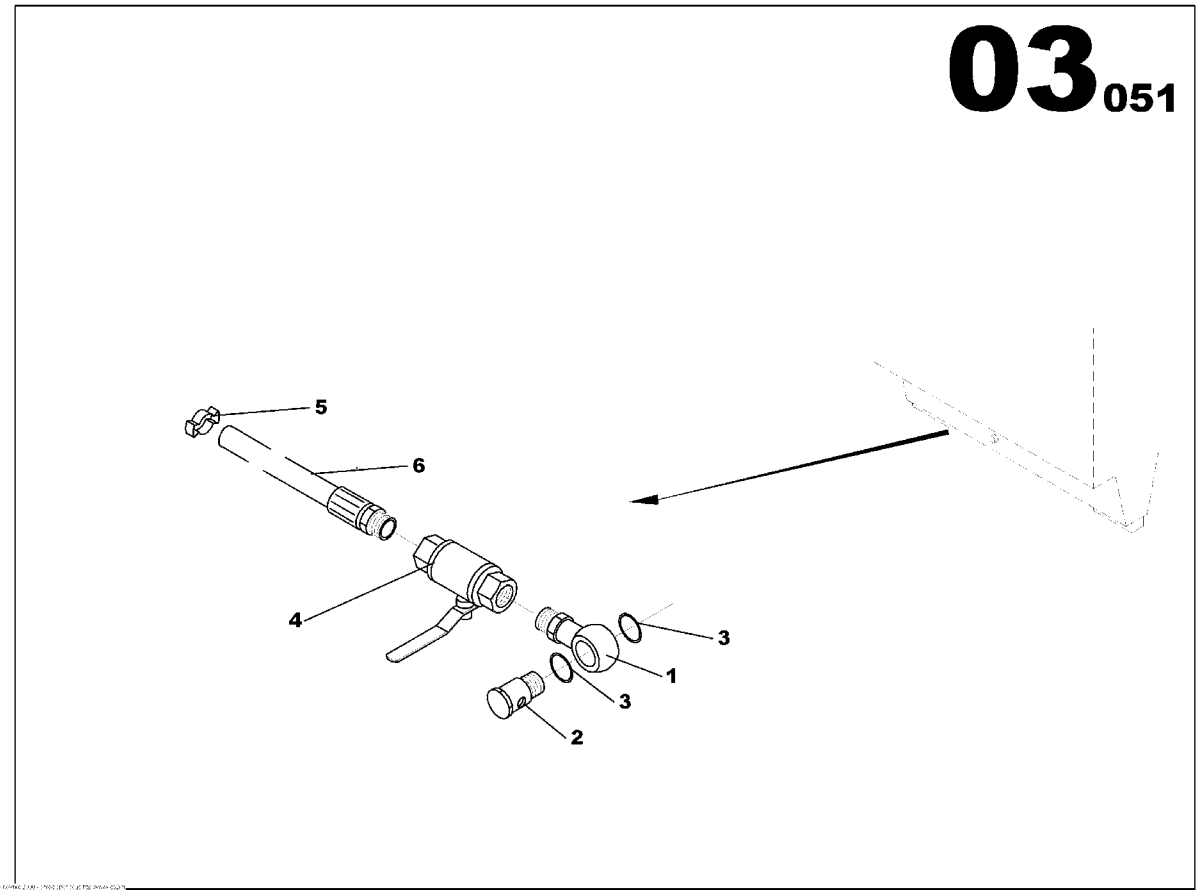

RADIATOR DRAIN MI L2E/L3E ASSEMBLY
85415214

Part numbers listed are only parts used in this model

Item	Part No.	Description	Qty	Un	From SN	To SN	Order PN	Page
1	85415735	BANJO CONNECTOR MALE D08	1	UN			85415735	
2	85416485	BANJO SCREW M12x125 L24	1	UN			85416485	
3	85413748	GASKET D12x18	2	UN			85413748	
4	85416469	2 WAY VALVE	1	UN			85416469	
5	17130824	SPRING CLAMP D10/13	2	UN			17130824	
6	85416436	FLEXIBLE HOSE D8x14	0.03	ML			85416436	

FAN GUARD ASSEMBLY

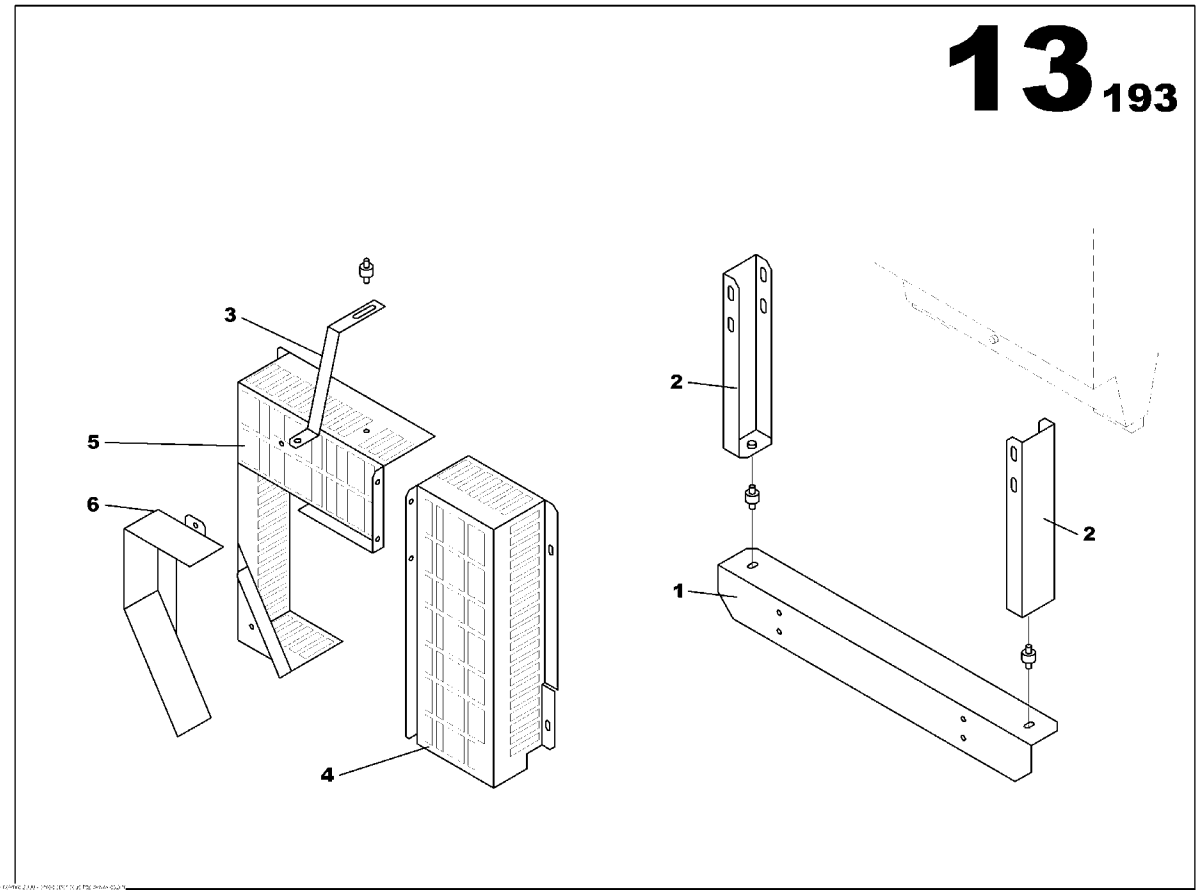

FAN GUARD ASSEMBLY
85627487

Part numbers listed are only parts used in this model

Item	Part No.	Description	Qty	Un	From SN	To SN	Order PN	Page
1	85416162	RADIATOR BRACKET MI S3L/S4L2	1	UN			85416162	
2	85415404	RADIATOR BRACKET ENGINE MI S3/S4	2	UN			85415404	
3	85415412	RADIATOR BRACKET ENGINE MI S3/S4	1	UN			85415412	
4	85415628	RADIATOR GUARD MI S3/S4	1	UN			85415628	
5	85415636	RADIATOR GUARD MI S3/S4	1	UN			85415636	
6	85415644	ALTERNATOR GUARD MI S3/S4	1	UN			85415644	

FUEL FUNCTION

Non illustré
Not illustrated

FUEL FUNCTION

Part numbers listed are only parts used in this model

Item	Part No.	Description	Qty	Un	From SN	To SN	Order PN	Page
1		FUEL TANK M107 ASSEMBLY	1	UN				45

FUEL TANK M107 ASSEMBLY

Non illustré
Not illustrated

FUEL TANK M107 ASSEMBLY

Part numbers listed are only parts used in this model

Item	Part No.	Description	Qty	Un	From SN	To SN	Order PN	Page
	17130170	FUEL TANK M107 ASSEMBLY	1	UN			17130170	47

FUEL TANK M107 ASSEMBLY

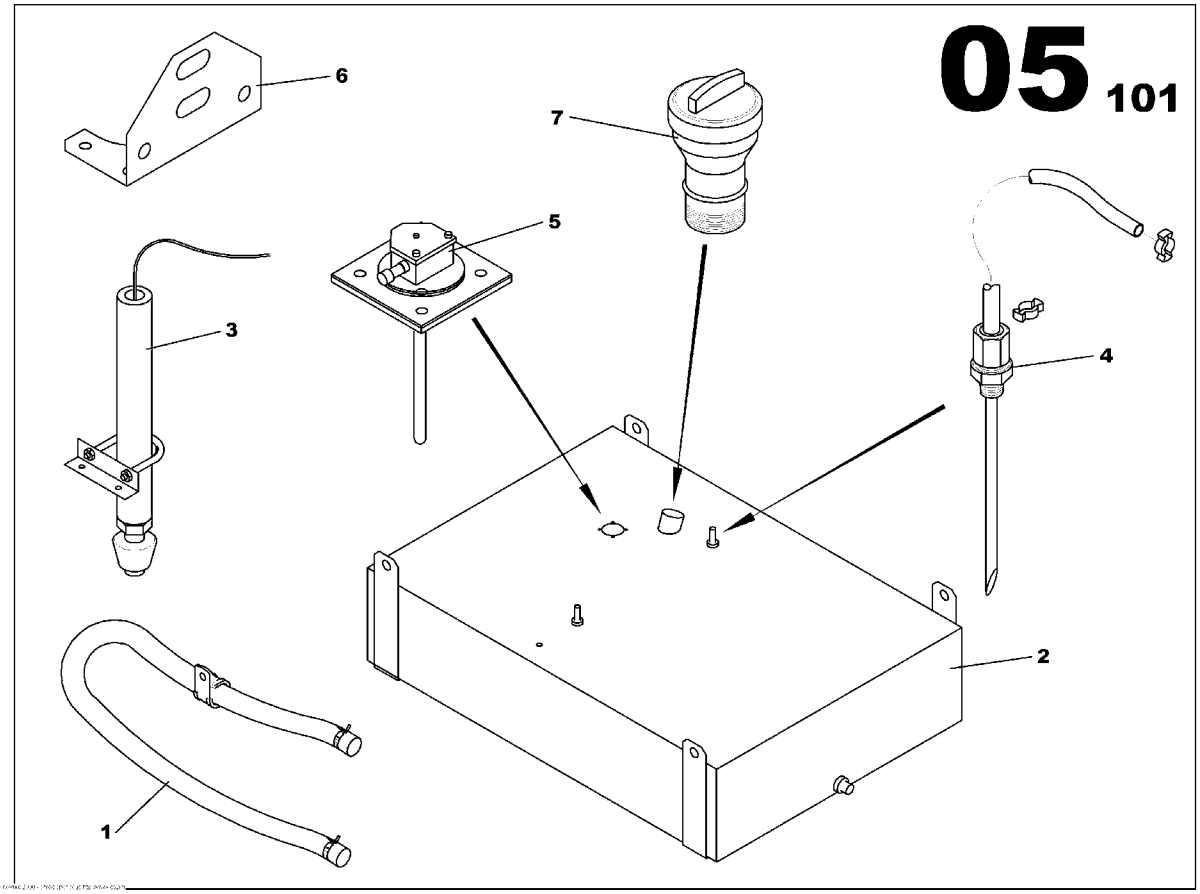

FUEL TANK M107 ASSEMBLY
17130170

Part numbers listed are only parts used in this model

Item	Part No.	Description	Qty	Un	From SN	To SN	Order PN	Page
1	17130196	COMBUSTIBLE VENT TANK ASSEMBLY	1	UN			17130196	51
2	17130154	TANK 230L	1	UN			17130154	
3	17130279	LEAKAGE DETECTION RETENTION BUND ASSEMBLY	1	UN			17130279	53
4	17130121	FUEL SUCCION PIPE L320 D8	1	UN			17130121	
5	17130287	TANK GAUGE ASSEMBLY	1	UN			17130287	55
6	85416147	ELECTRICAL PUMP BRACKET	1	UN			85416147	
7	85629541	FUEL FILLING FUNNEL BASE TANK	1	UN			85629541	49

FUEL FILLING FUNNEL BASE TANK

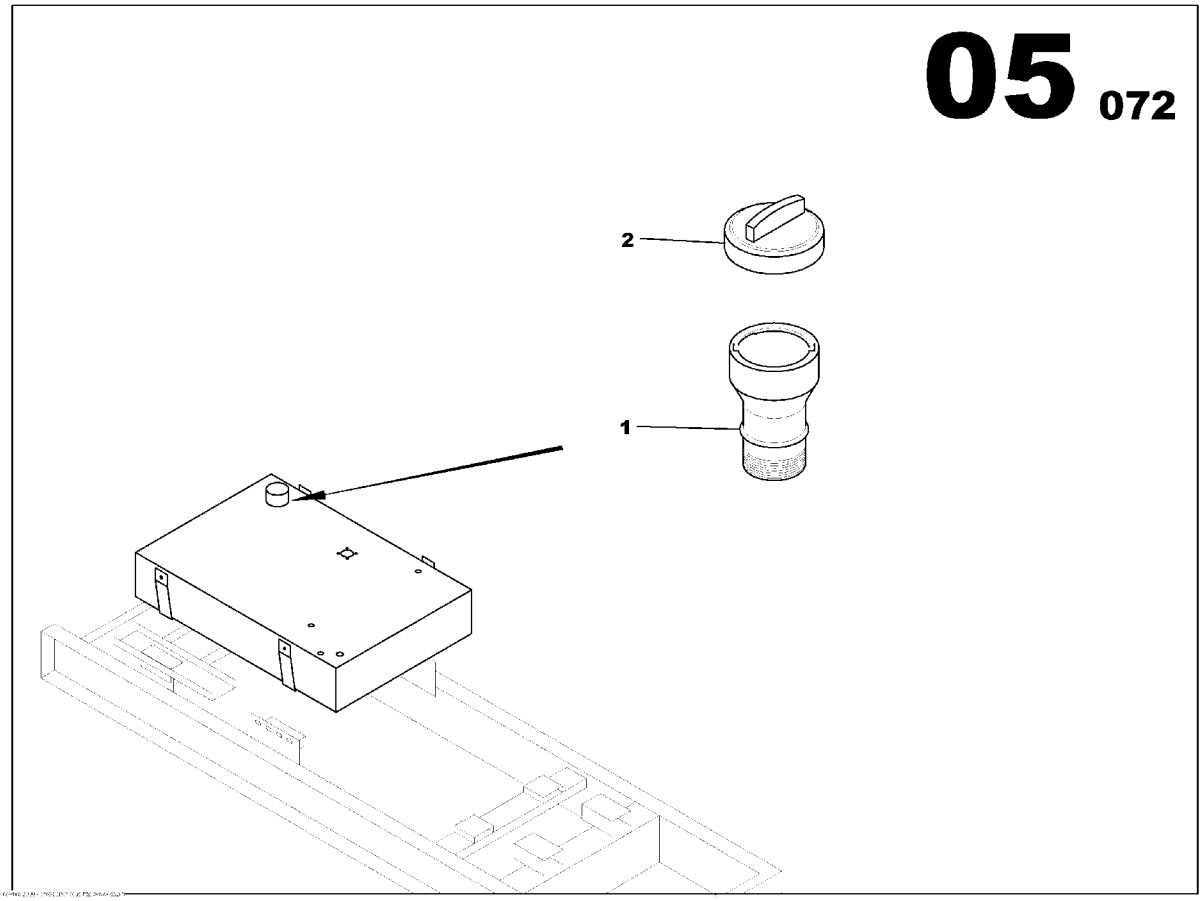

FUEL FILLING FUNNEL BASE TANK
85629541

Part numbers listed are only parts used in this model

Item	Part No.	Description	Qty	Un	From SN	To SN	Order PN	Page
1	85403517	FUEL FILLING FUNNEL BASE TANK	1	UN			85403517	
2	85509222	TANK CAP	1	UN			85509222	

COMBUSTIBLE VENT TANK ASSEMBLY

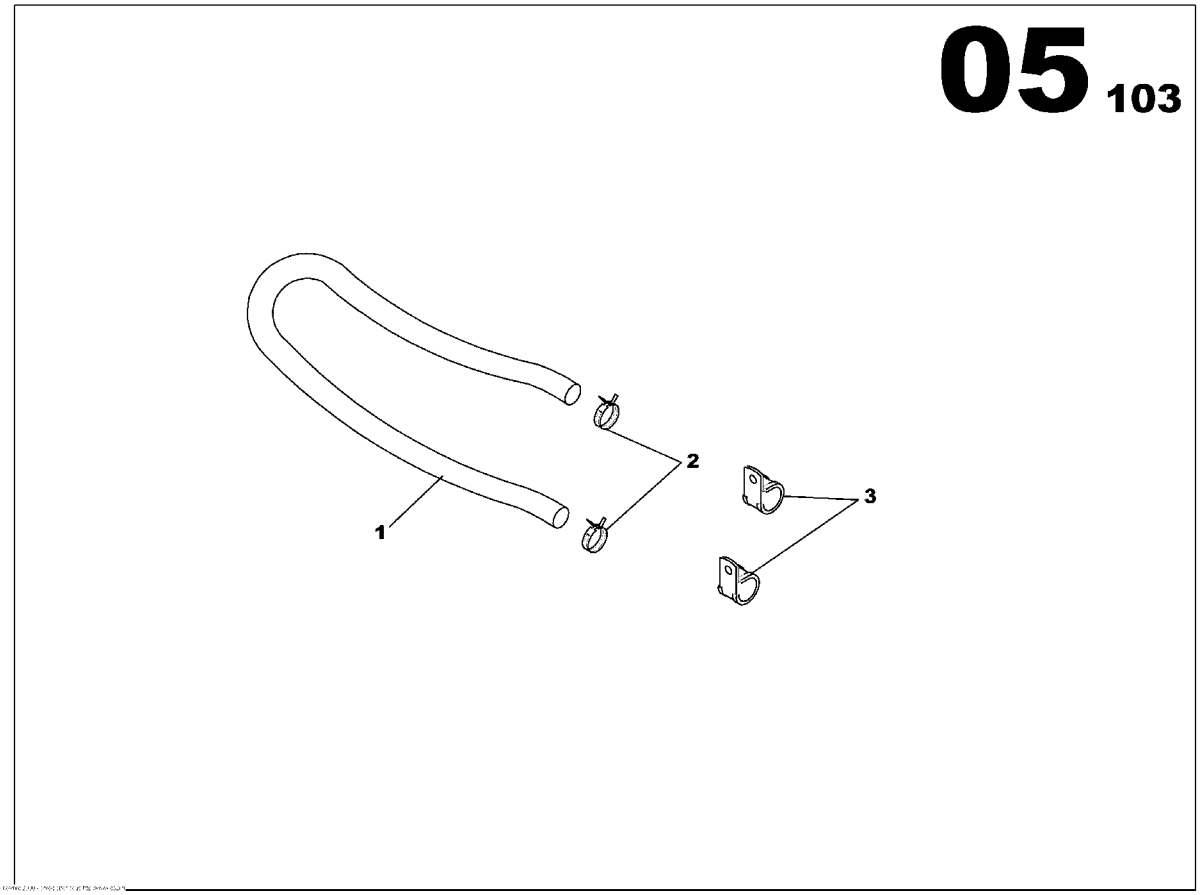

COMBUSTIBLE VENT TANK ASSEMBLY
17130196

Part numbers listed are only parts used in this model

Item	Part No.	Description	Qty	Un	From SN	To SN	Order PN	Page
1	85416436	FLEXIBLE HOSE D8x14	1	ML			85416436	
2	17130824	SPRING CLAMP D10/13	1	UN			17130824	
3	17130816	CLAMP D20	2	UN			17130816	

LEAKAGE DETECTION RETENTION BUND ASSEMBLY

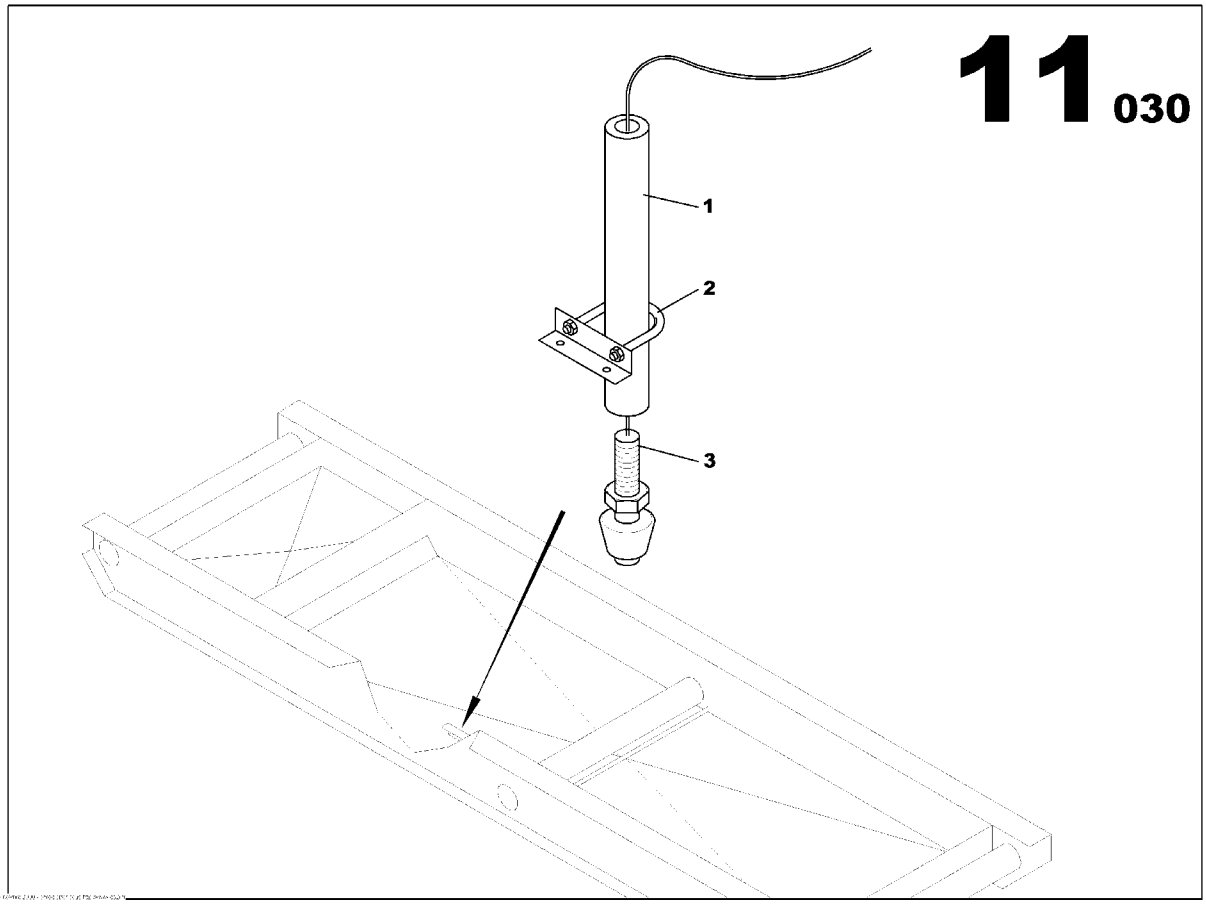

LEAKAGE DETECTION RETENTION BUND ASSEMBLY
17130279

Part numbers listed are only parts used in this model

Item	Part No.	Description	Qty	Un	From SN	To SN	Order PN	Page
1	17130428	DETECTION ESCAPE SWITCH BRACKET	1	UN			17130428	
2	85417772	HOSE CLAMP D17	1	UN			85417772	
3	85417459	LEVEL SWITCH	1	UN			85417459	

TANK GAUGE ASSEMBLY

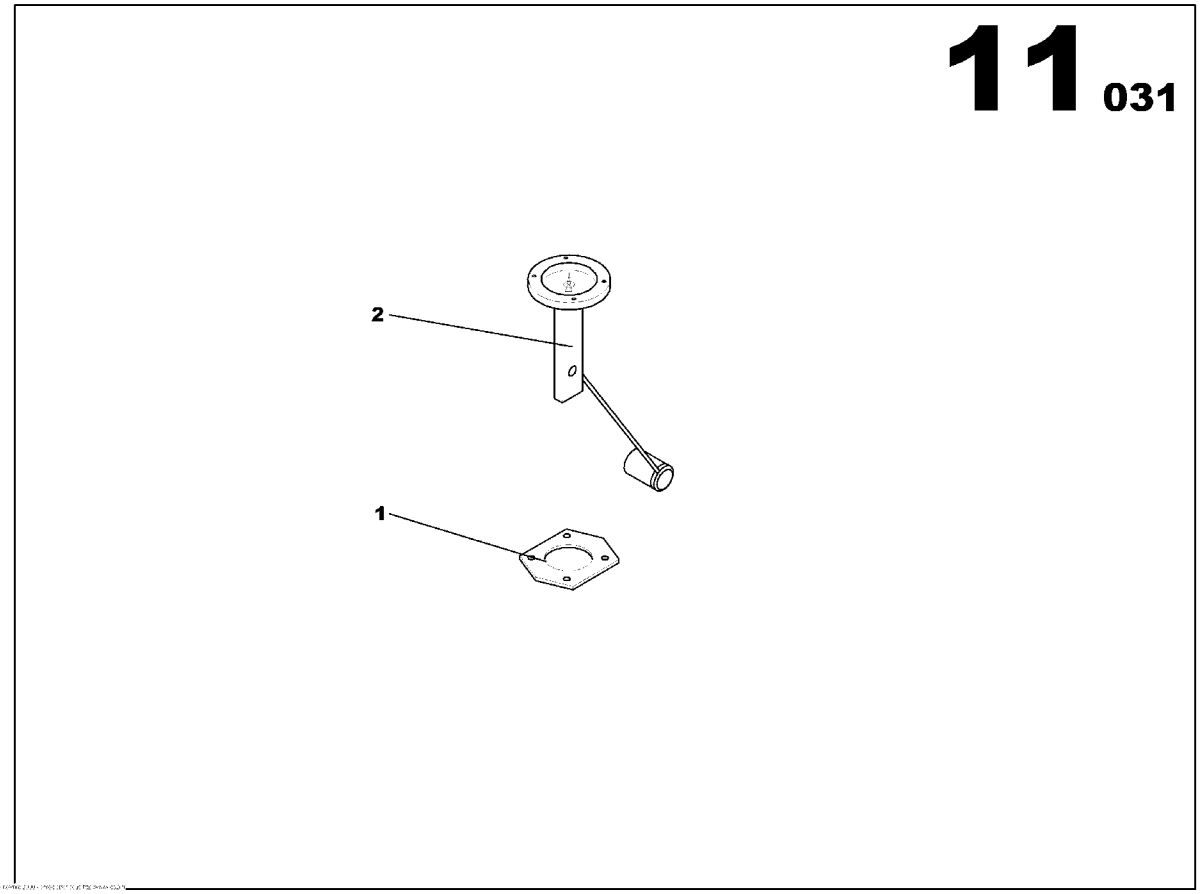

TANK GAUGE ASSEMBLY
17130287

Part numbers listed are only parts used in this model

Item	Part No.	Description	Qty	Un	From SN	To SN	Order PN	Page
1	85490811	SPECIAL FLANGE GASKET	1	UN			85490811	
2	17130295	BASE TANK FUEL GAUGE	1	UN			17130295	

STARTING FUNCTION

Non illustré
Not illustrated

STARTING FUNCTION

Part numbers listed are only parts used in this model

Item	Part No.	Description	Qty	Un	From SN	To SN	Order PN	Page
1		ELECTRIC STARTER ASSEMBLY	1	UN				59

ELECTRIC STARTER ASSEMBLY

Non illustré
Not illustrated

ELECTRIC STARTER ASSEMBLY

Part numbers listed are only parts used in this model

Item	Part No.	Description	Qty	Un	From SN	To SN	Order PN	Page
	17130238	ELECTRIC STARTER ASSEMBLY	1	UN			17130238	61

ELECTRIC STARTER ASSEMBLY

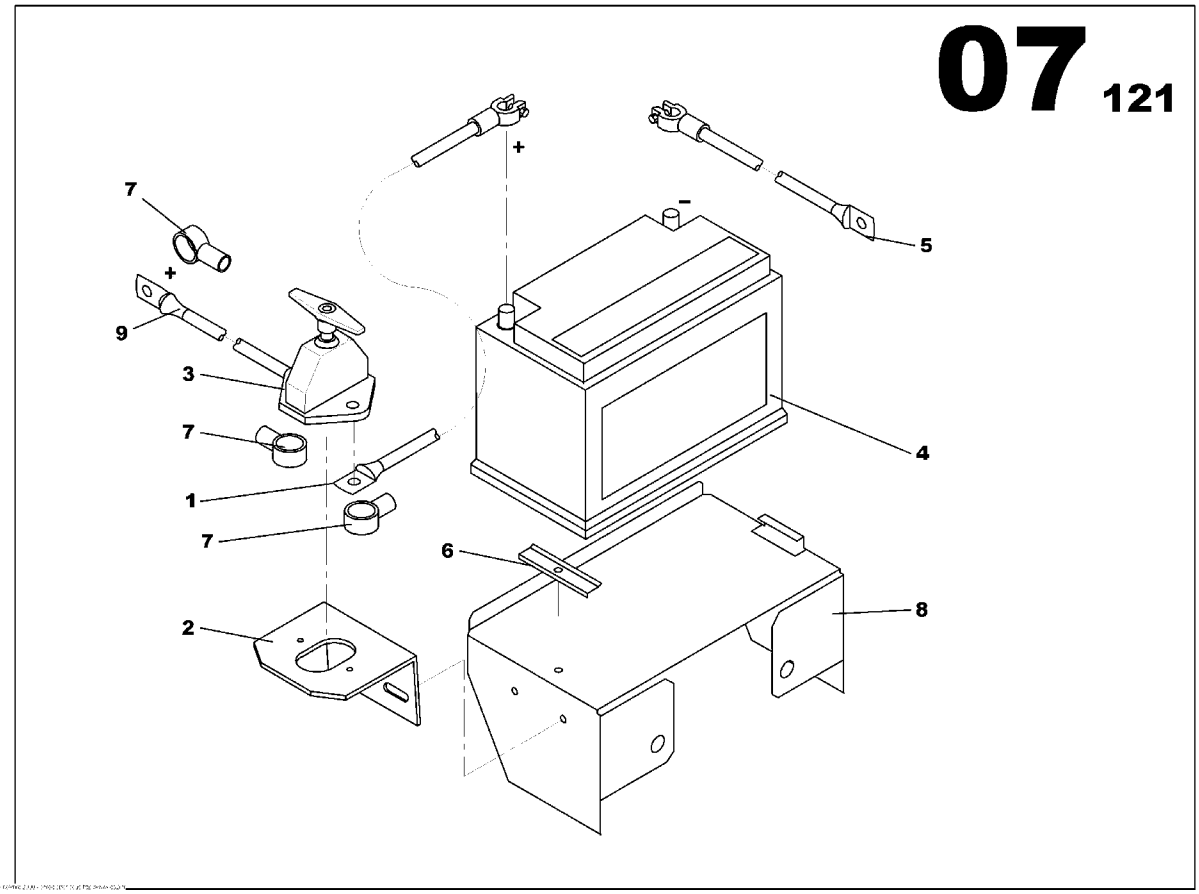

ELECTRIC STARTER ASSEMBLY
17130238

Part numbers listed are only parts used in this model

Item	Part No.	Description	Qty	Un	From SN	To SN	Order PN	Page
1	85634384	BATTERY CABLE 35mm2 L0900 RED	1	UN			85634384	
2	85403707	BATTERY ISOLATOR BRACKET	1	UN			85403707	
3	85403723	BATTERY ISOLATOR SWITCH	1	UN			85403723	
4	85403715	STARTING BATTERY 12V 70Ah 400A	1	UN			85403715	
5	85412625	BATTERY CABLE(-) 35mm2 L900 BLACK	1	UN			85412625	
6	85403699	BATTERY FIXING BRACKET	1	UN			85403699	
7	85502235	COWL	3	UN			85502235	
8	85633410	BATTERY SUPPORT BRACKET	1	UN			85633410	
9	85634376	BATTERY CABLE(+) 35mm2 L730 RED	1	UN			85634376	

EXHAUST FUNCTION

Non illustré
Not illustrated

EXHAUST FUNCTION

Part numbers listed are only parts used in this model

Item	Part No.	Description	Qty	Un	From SN	To SN	Order PN	Page
1	85414530	EXHAUST FITTING KIT M107 ASSEMBLY	1	UN			85414530	65

EXHAUST FITTING KIT M107 ASSEMBLY

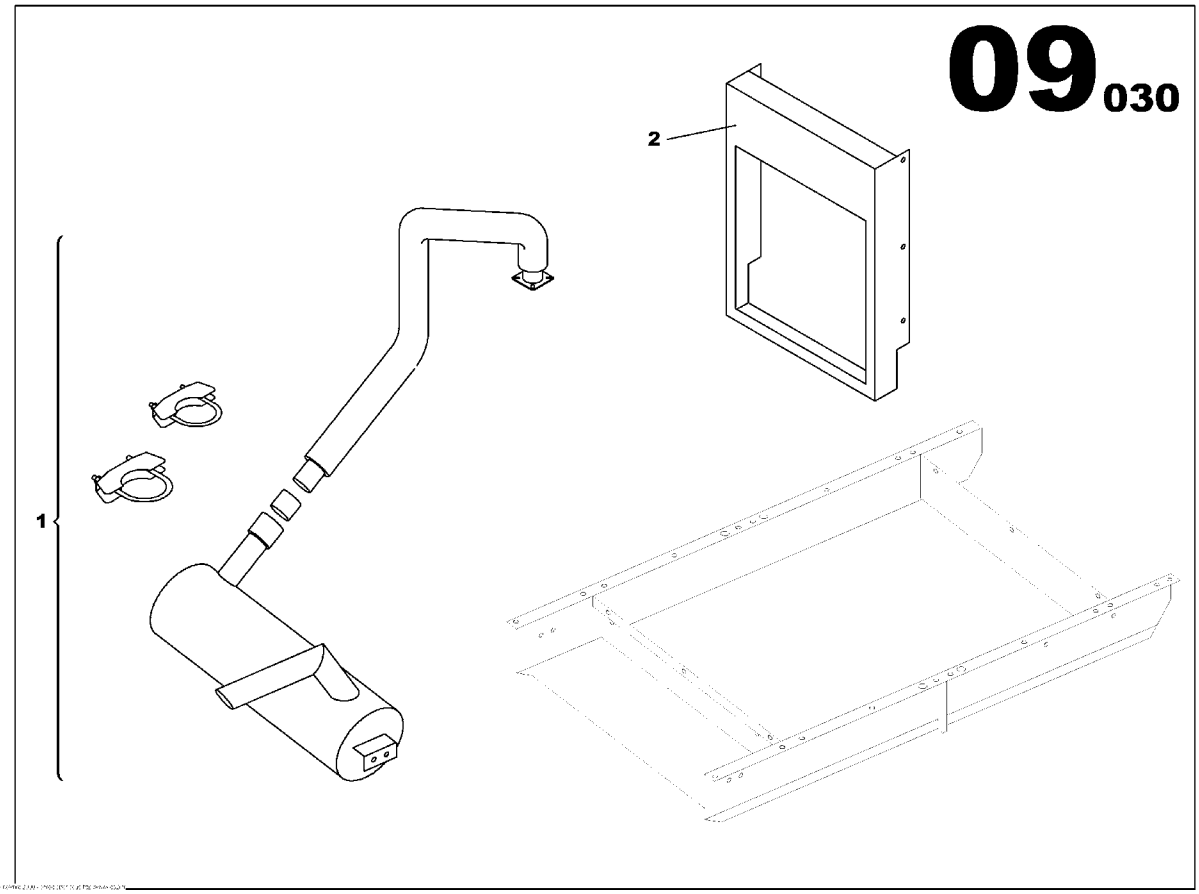

EXHAUST FITTING KIT M107 ASSEMBLY
85414530

Part numbers listed are only parts used in this model

Item	Part No.	Description	Qty	Un	From SN	To SN	Order PN	Page
1	85414563	EXHAUST MUFFLER M107 ASSEMBLY	1	UN			85414563	67
2	85632982	RADIATOR PANEL M107 MI S4L2	1	UN			85632982	

EXHAUST MUFFLER M107 ASSEMBLY

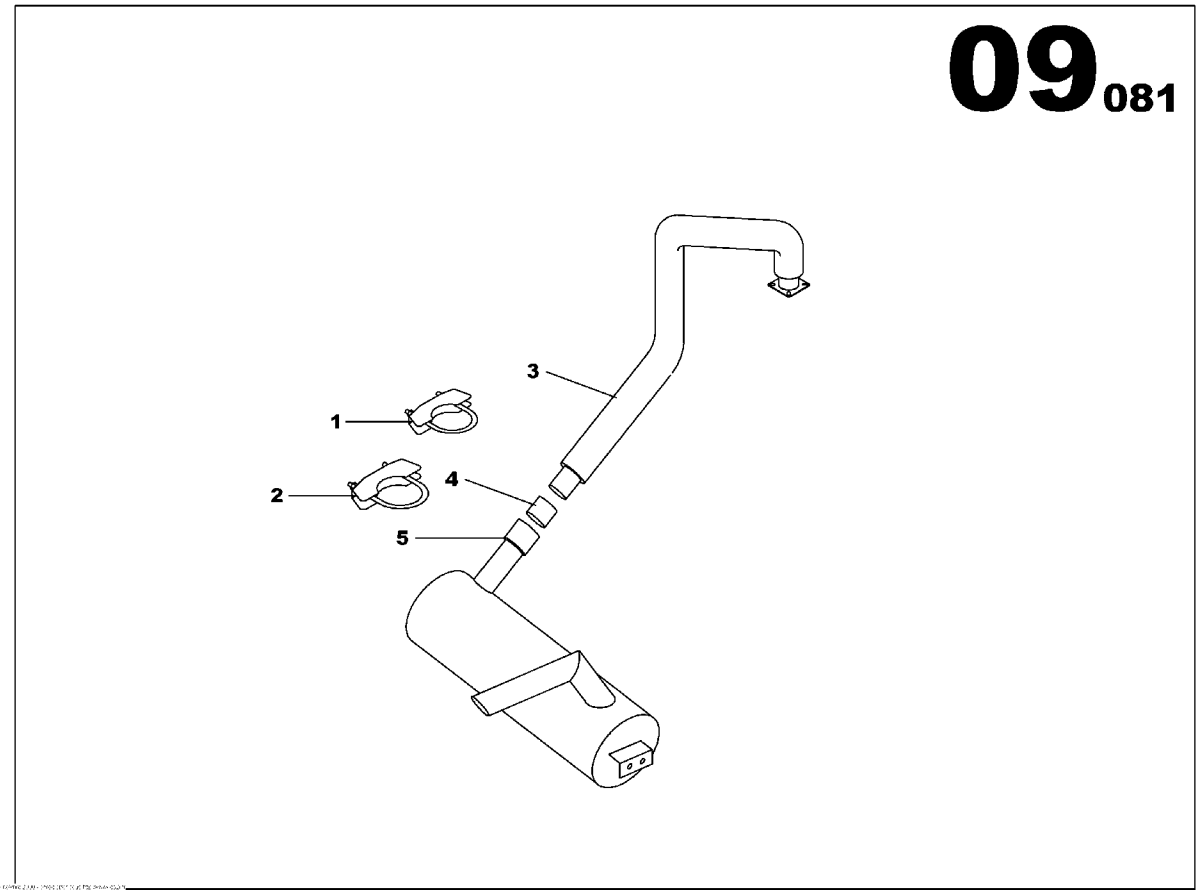

EXHAUST MUFFLER M107 ASSEMBLY
85414563

Part numbers listed are only parts used in this model

Item	Part No.	Description	Qty	Un	From SN	To SN	Order PN	Page
1	85490787	HOSE CLAMP D45	1	UN	03002053		85490787	
2	85429421	HOSE CLAMP D54	1	UN	03002053		85429421	
3	85413805	EXHAUST PIPE D40 MITSU	1	UN			85413805	
4	85496925	MUFFLER PIPE UNION REDUCER D50/D40	1	UN			85496925	
5	85633832	23dB MUFFLER	1	UN	03005015		85633832	

FRAME FUNCTION

Non illustré
Not illustrated

FRAME FUNCTION

Part numbers listed are only parts used in this model

Item	Part No.	Description	Qty	Un	From SN	To SN	Order PN	Page
1		FRAME M107 ASSEMBLY	1	UN				71
2	85498822	TRANSFORMER ASSEMBLY	1	UN			85498822	75
3	85499911	G20 ACCESSORY ASSEMBLY	1	UN			85499911	77

FRAME M107 ASSEMBLY

Non illustré
Not illustrated

FRAME M107 ASSEMBLY

Part numbers listed are only parts used in this model

Item	Part No.	Description	Qty	Un	From SN	To SN	Order PN	Page
	17130329	FRAME M107 ASSEMBLY	1	UN			17130329	73

FRAME M107 ASSEMBLY

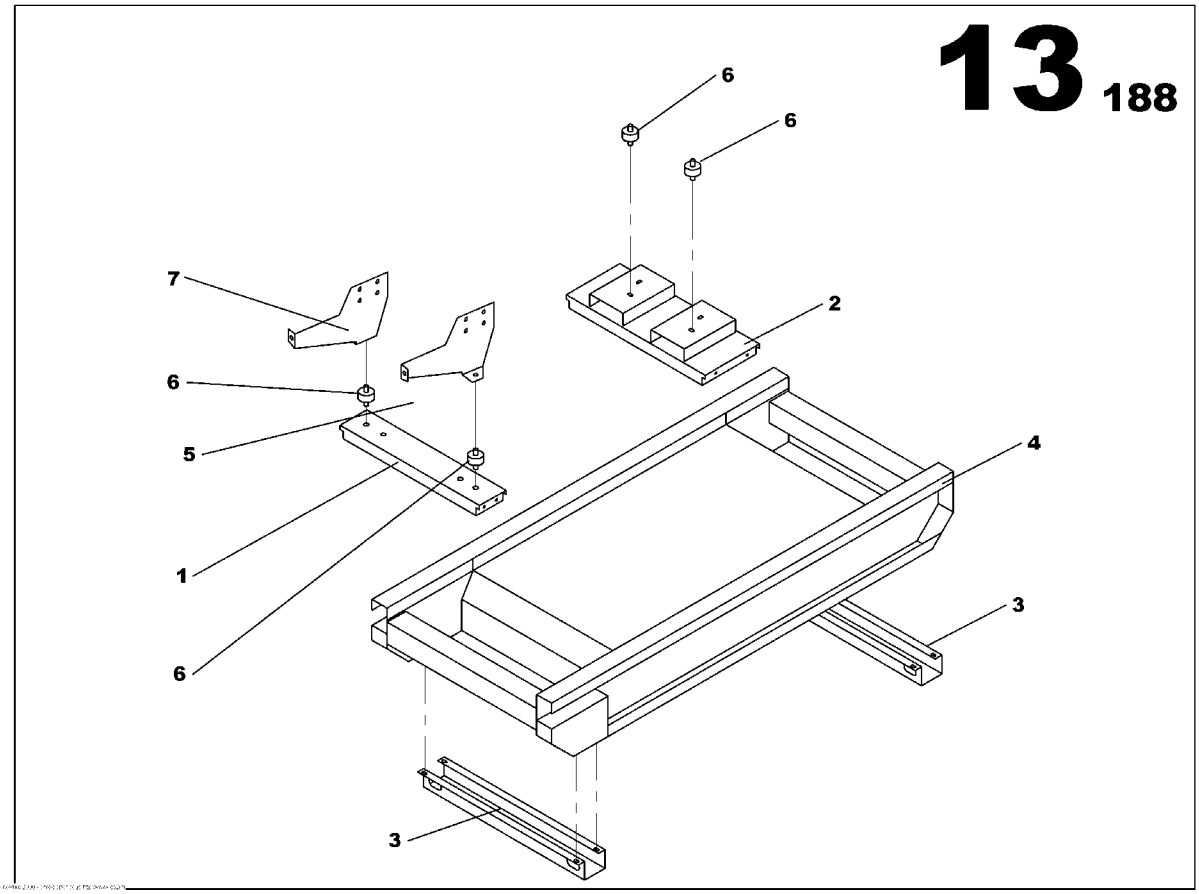

FRAME M107 ASSEMBLY
17130329

Part numbers listed are only parts used in this model

Item	Part No.	Description	Qty	Un	From SN	To SN	Order PN	Page
1	17130378	ENGINE TRAVERSE	1	UN			17130378	
2	17130386	ALTERNATOR TRAVERSE M107	1	UN			17130386	
3	17130394	FORK LIFT CHANNEL	2	UN			17130394	
4	17130303	FRAME M107	1	UN			17130303	
5	85416055	ENGINE SUPPORT MI S3L2/S4L2 LEFT SIDE	1	UN			85416055	
6	85415495	ANTI-VIBRATION MOUNT D60 Th35	4	UN			85415495	
7	85416063	ENGINE SUPPORT MI S3L2/S4L2 RIGHT SIDE	1	UN			85416063	

TRANSFORMER ASSEMBLY

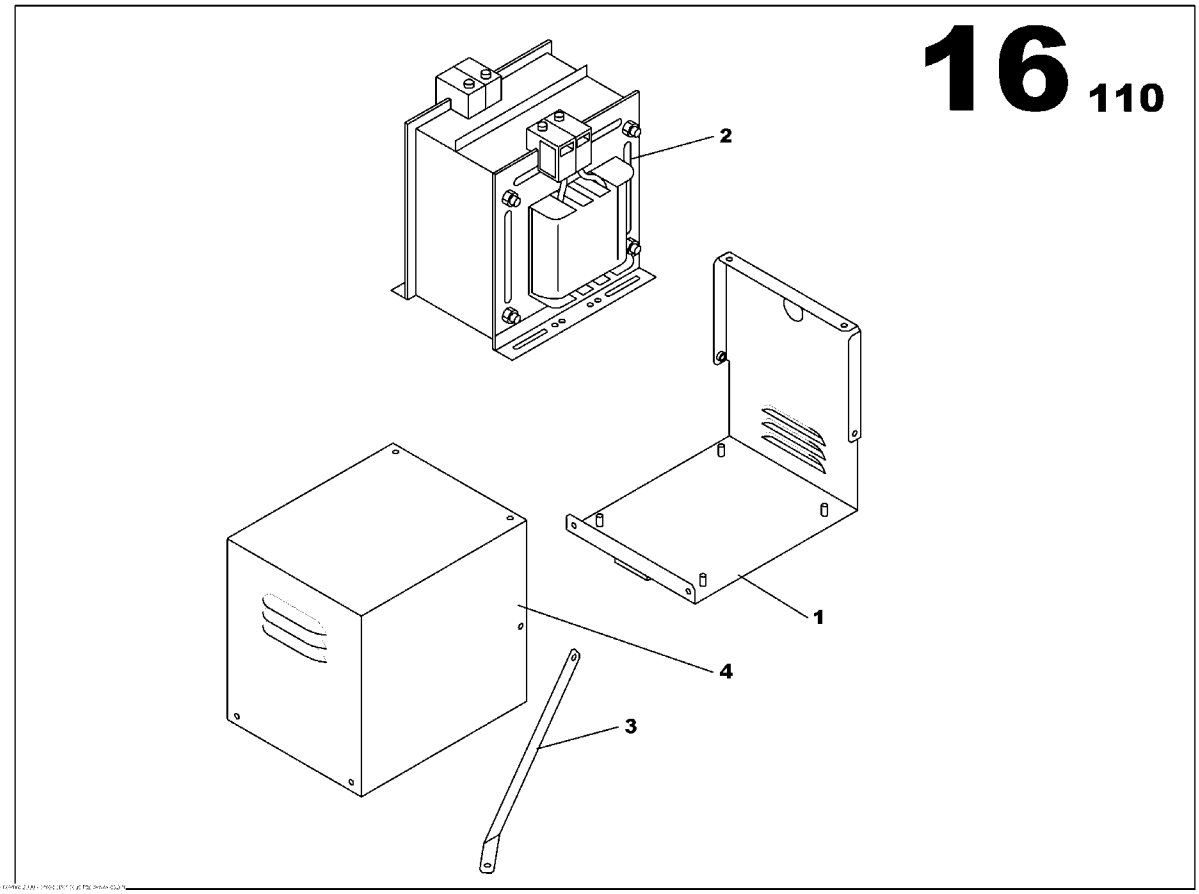

TRANSFORMER ASSEMBLY
85498822

Part numbers listed are only parts used in this model

Item	Part No.	Description	Qty	Un	From SN	To SN	Order PN	Page
1	85499051	TRANSFORMER HOUSING	1	UN			85499051	
2	85426674	VOLTAGE TRANSFORMER	1	UN			85426674	
3	85499275	ISOLATING TRANSFORMER HOUSING BRACKET	1	UN			85499275	
4	85499069	TRANSFORMER COVER	1	UN			85499069	

G20 ACCESSORY ASSEMBLY

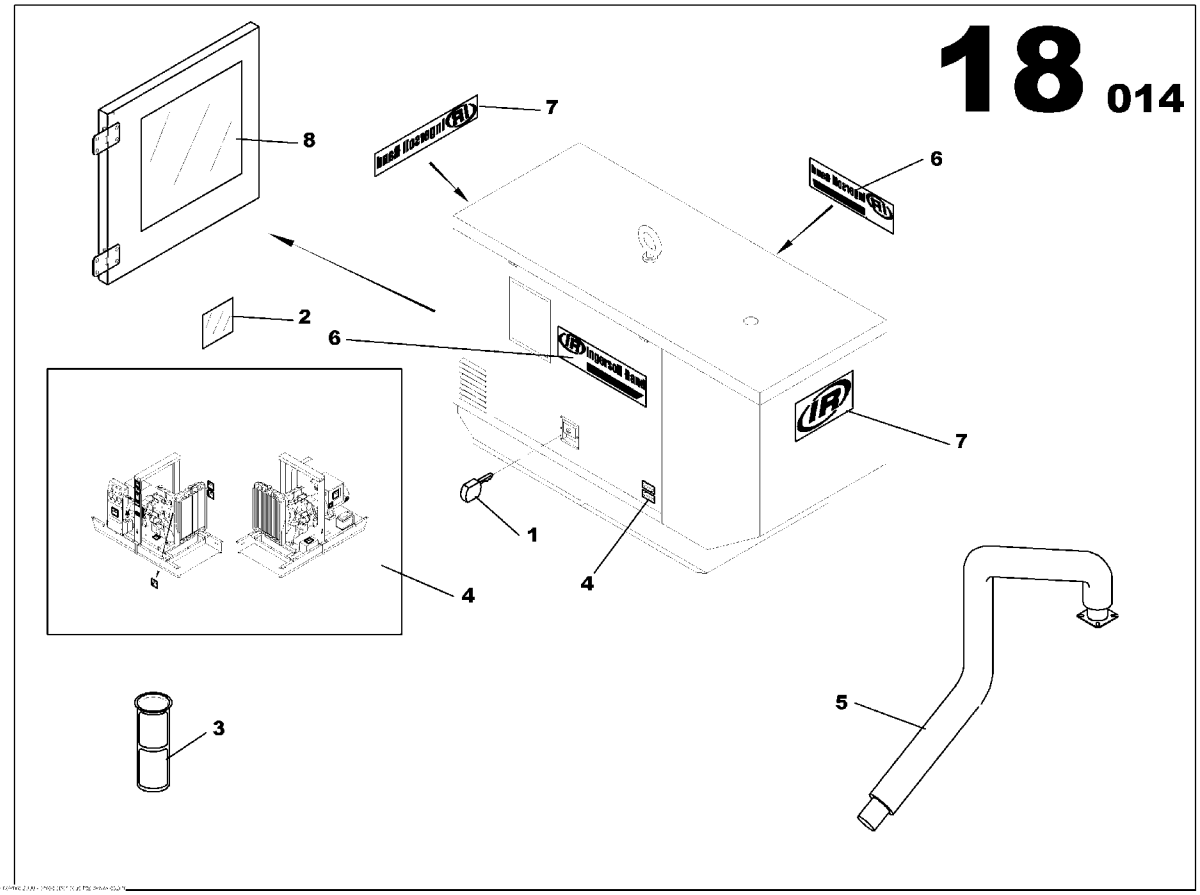

G20 ACCESSORY ASSEMBLY
85499911

Part numbers listed are only parts used in this model

Item	Part No.	Description	Qty	Un	From SN	To SN	Order PN	Page
1	85509263	WBH LATCHE KEY	1	UN			85509263	
2	17130865	STICKER PROPER VOLTAGE ADJ	1	UN	03006078		17130865	
3	85633386	FUEL FILTER	1	UN	03010525		85633386	
4	85502490	SAFETY DECALS G20-25-40 ASSEMBLY	1	UN			85502490	79
5	85413854	EXHAUST PIPE D40 MITSU	1	UN	03006052		85413854	
6	85500015	STICKER G20	2	UN			85500015	
7	85636553	DECALS ASSEMBLY	1	UN			85636553	81
8	17130832	STICKER CAPACITY DIAGRAM G20	1	UN			17130832	

SAFETY DECALS G20-25-40 ASSEMBLY

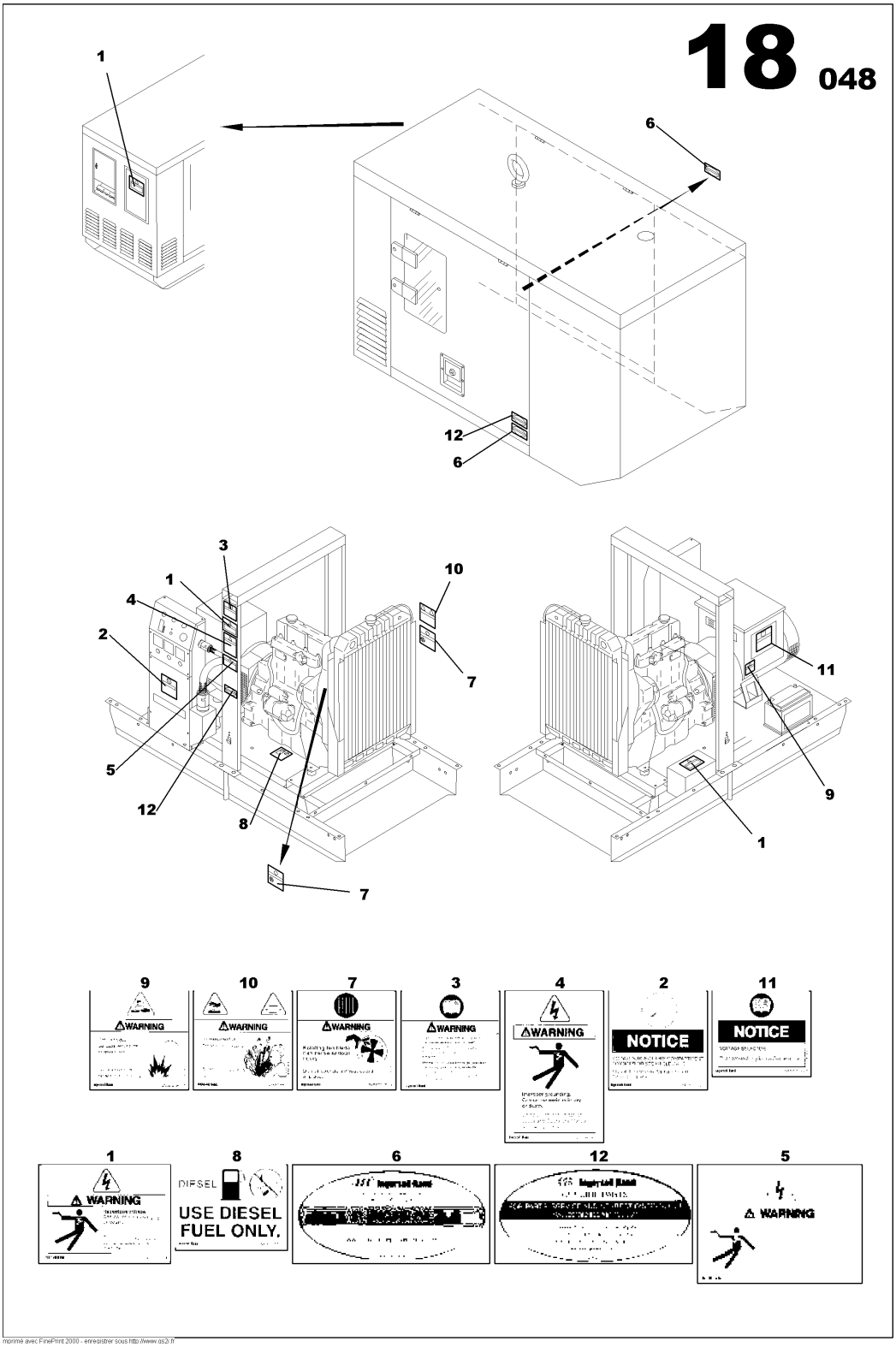

imprimé avec FinePrint 2000 - enregistrer sous http://www.qs2.fr

SAFETY DECALS G20-25-40 ASSEMBLY
85502490

Part numbers listed are only parts used in this model

Item	Part No.	Description	Qty	Un	From SN	To SN	Order PN	Page
1	54605027	STICKER WARNING DANGER	3	UN			54605027	
2	54605001	STICKER INSTRUCTIONS	1	UN			54605001	
3	54568787	STICKER INSTRUCTIONS	1	UN			54568787	
4	54604996	STICKER WARNING DANGER	1	UN			54604996	
5	54627773	STICKER WARNING DANGER	1	UN			54627773	
6	54640008	STICKER OIL ENGINE	2	UN			54640008	
7	54568779	STICKER VENTILATOR DANGER SYMBOL	2	UN			54568779	
8	54625207	STICKER DIESEL ONLY	1	UN			54625207	
9	54568753	STICKER BATTERY DANGER SYMBOL	1	UN			54568753	
10	54568761	STICKER RADIATOR DANGER SYMBOL	1	UN			54568761	
11	54605019	STICKER INSTRUCTIONS VOLTAGE SELECTOR	1	UN			54605019	
12	54640024	STICKER GENUINE PARTS	2	UN			54640024	

DECALS ASSEMBLY

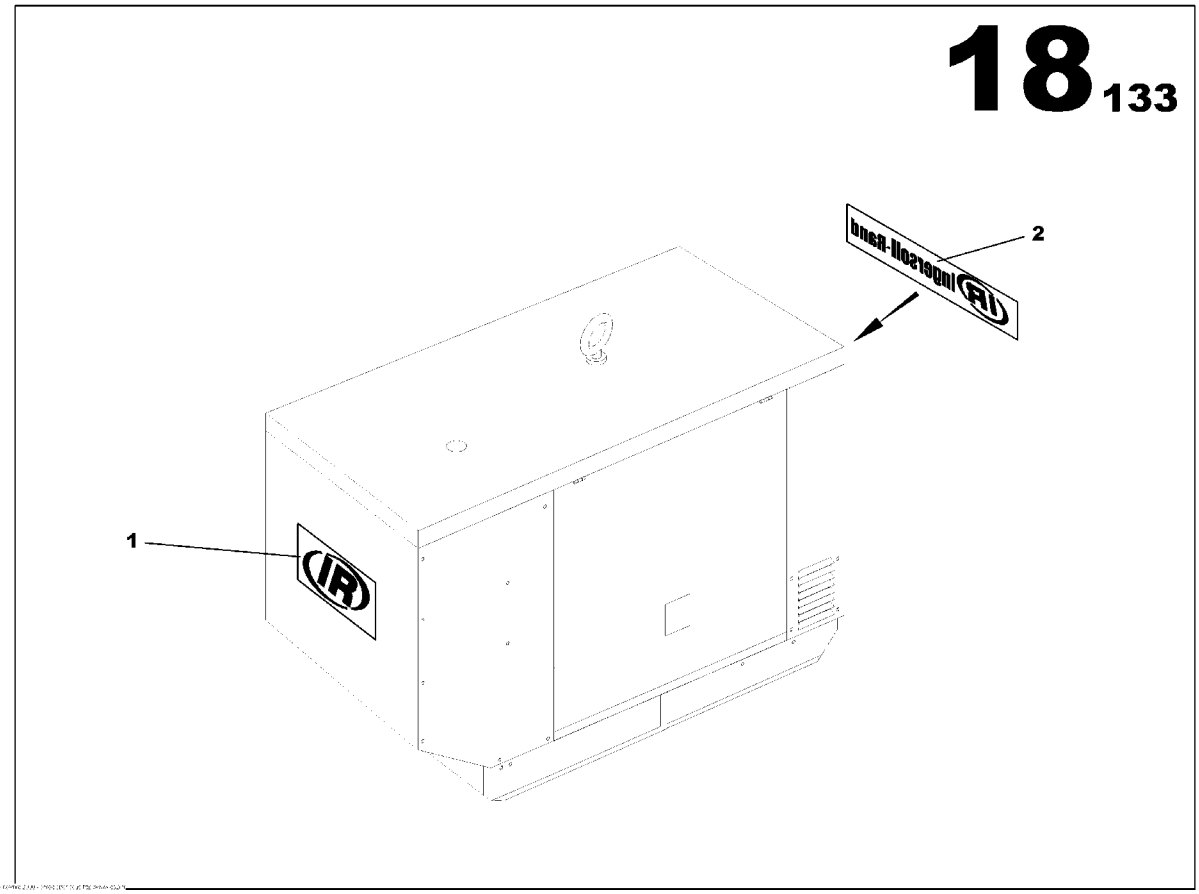

DECALS ASSEMBLY
85636553

Part numbers listed are only parts used in this model

Item	Part No.	Description	Qty	Un	From SN	To SN	Order PN	Page
1	85500197	STICKER IR	1	UN			85500197	
2	85500221	STICKER IR SYMBOL	1	UN			85500221	

CANOPY FONCTION

Non illustré
Not illustrated

CANOPY FONCTION

Part numbers listed are only parts used in this model

Item	Part No.	Description	Qty	Un	From SN	To SN	Order PN	Page
1	85634202	CANOPY M107 ASSEMBLY	1	UN			85634202	85
2	85491991	EMERGENCY STOP PANEL ASSEMBLY	1	UN			85491991	95

CANOPY M107 ASSEMBLY

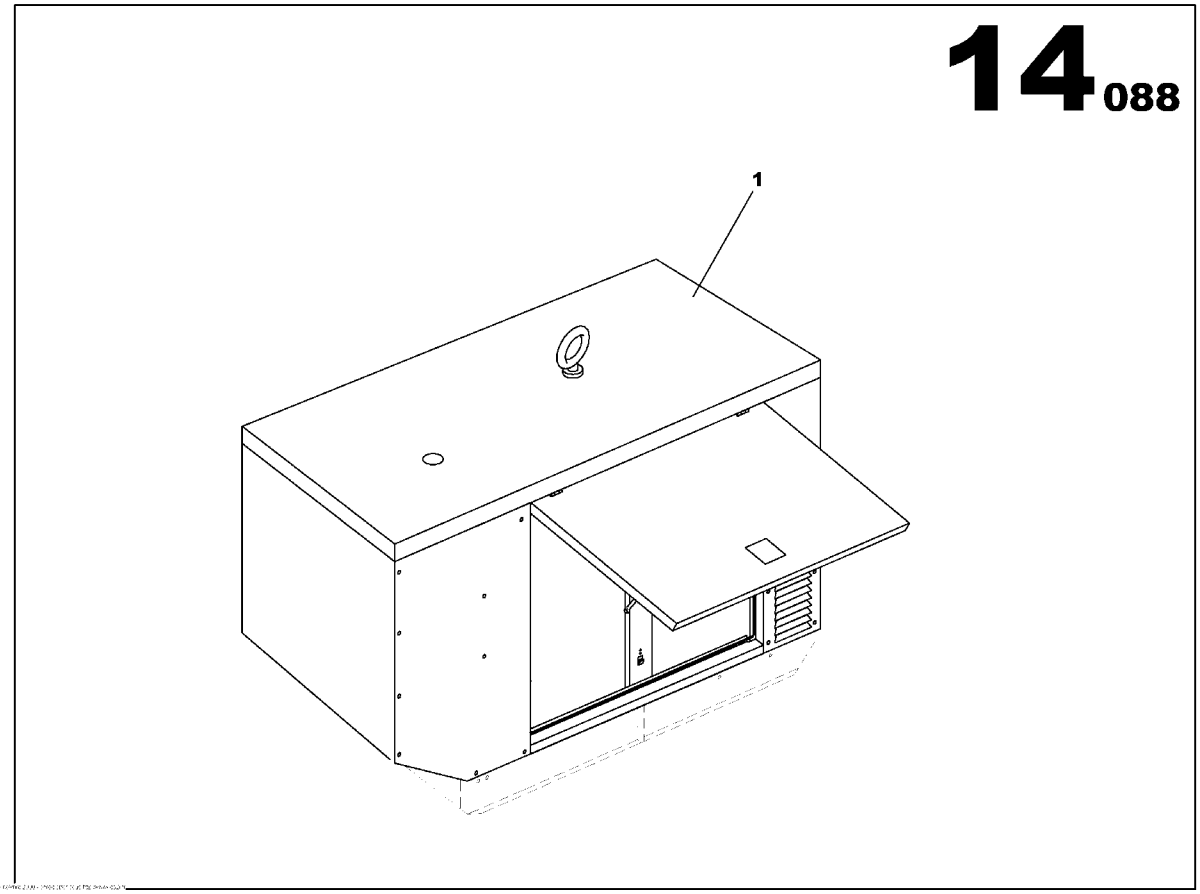

CANOPY M107 ASSEMBLY
85634202

Part numbers listed are only parts used in this model

Item	Part No.	Description	Qty	Un	From SN	To SN	Order PN	Page
1	85634194	CANOPY M107 ASSEMBLY	1	UN			85634194	87

CANOPY M107 ASSEMBLY

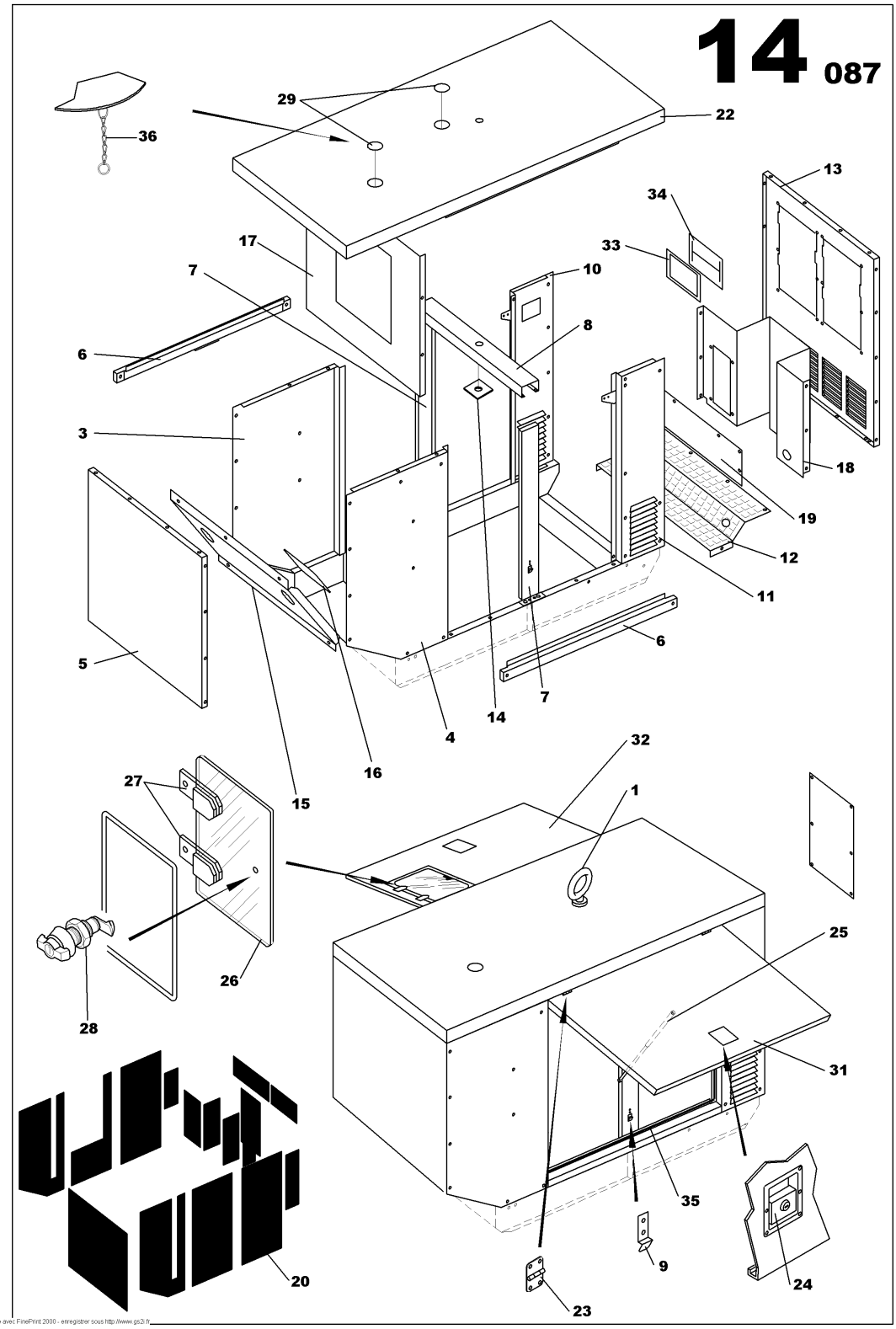

CANOPY M107 ASSEMBLY
85634194

Part numbers listed are only parts used in this model

Item	Part No.	Description	Qty	Un	From SN	To SN	Order PN	Page
1	85492700	LIFTING EYE D58	1	UN			85492700	
3	85415354	M107 CANOPY RIGHT HEAD PANEL	1	UN			85415354	
4	85415362	M107 CANOPY LEFT HEAD PANEL	1	UN			85415362	
5	85415347	M107 CANOPY HEAD PANEL	1	UN			85415347	
6	85415370	CANOPY SIDE PANEL M107	2	UN			85415370	
7	85412484	SIDE SUPPORT ARCH UPRIGHTS M107	2	UN			85412484	
8	85412492	TRANSVERSE ARCH SUPPORT M107	1	UN			85412492	
9	85413516	STRIKER PLATE M107 CANOPY DOOR	2	UN			85413516	
10	85497410	M107 CANOPY RIGHT REAR PANEL	1	UN			85497410	
11	85497428	M107 CANOPY LEFT REAR PANEL	1	UN			85497428	
12	85497436	REAR AIR INTAKE LOUVER M107 CANOPY	1	UN			85497436	
13	85415313	M107 CANOPY REAR PANEL	1	UN			85415313	
14	85509594	SUPPORT ARCH BRACKET PANEL	1	UN			85509594	
15	85509560	RADIATOR BLACK PANEL M107	1	UN			85509560	
16	85509578	RADIATOR BLACK PANEL M107	1	UN			85509578	
17	85509586	RADIATOR PANEL M107 JD 3039D	1	UN			85509586	
18	85633048	AIR DEFLECTOR	1	UN			85633048	
19	85633055	AIR DEFLECTOR	1	UN			85633055	
20	85633063	SOUNDPROOF PANELS BATCH M107	1	UN			85633063	
22	85634319	CANOPY TOP M107	1	UN			85634319	
23	85406130	DOOR HINGE	4	UN			85406130	
24	85509305	CANOPY DOOR LOCK KEY LOCK	2	UN			85509305	
25	85416477	GAS FILLED DAMPER 70kg ROD D10	2	UN			85416477	
26	85416501	SECURITY WINDOW M107	1	UN			85416501	
27	85412831	DOOR HINGE	2	UN			85412831	
28	85402907	SLAM SHUT ASSEMBLY	1	UN			85402907	91
29	85621142	FLAP D160	2	UN			85621142	
31	85509859	CANOPY DOOR M107 LEFT	1	UN			85509859	

CANOPY M107 ASSEMBLY

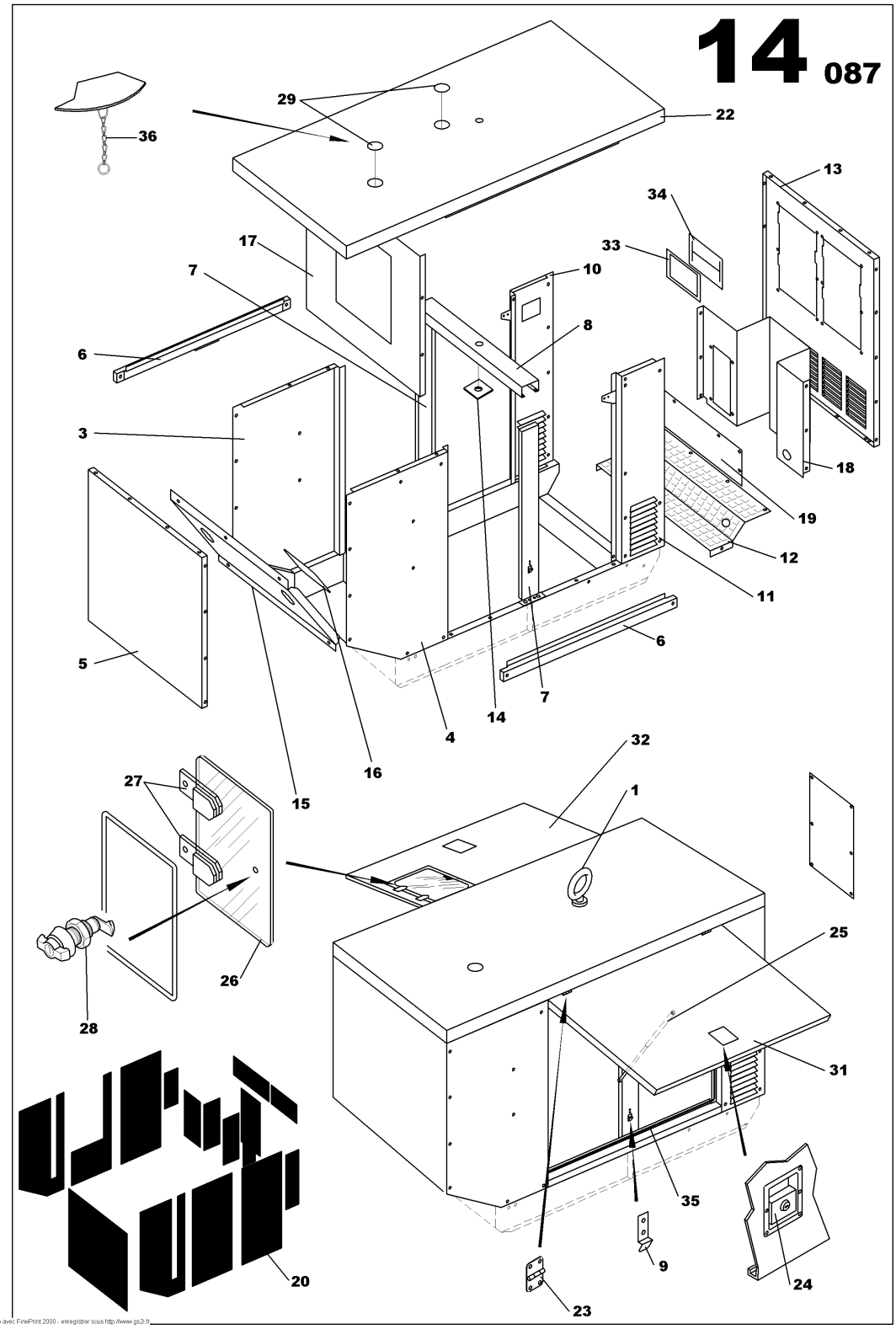

CANOPY M107 ASSEMBLY
85634194

Part numbers listed are only parts used in this model

Item	Part No.	Description	Qty	Un	From SN	To SN	Order PN	Page
32	85509842	CANOPY DOOR M107 RIGHT	1	UN			85509842	
33	85634939	WIRE BIB OUTPUT BRACKET M107	1	UN			85634939	
34	85621191	CABLE OUTPUT RUBBER SCREEN	1	UN			85621191	
35	85413722	LINEAR SEAL	8.3	ML			85413722	
36	85632016	CHAIN	2	UN			85632016	

SLAM SHUT ASSEMBLY

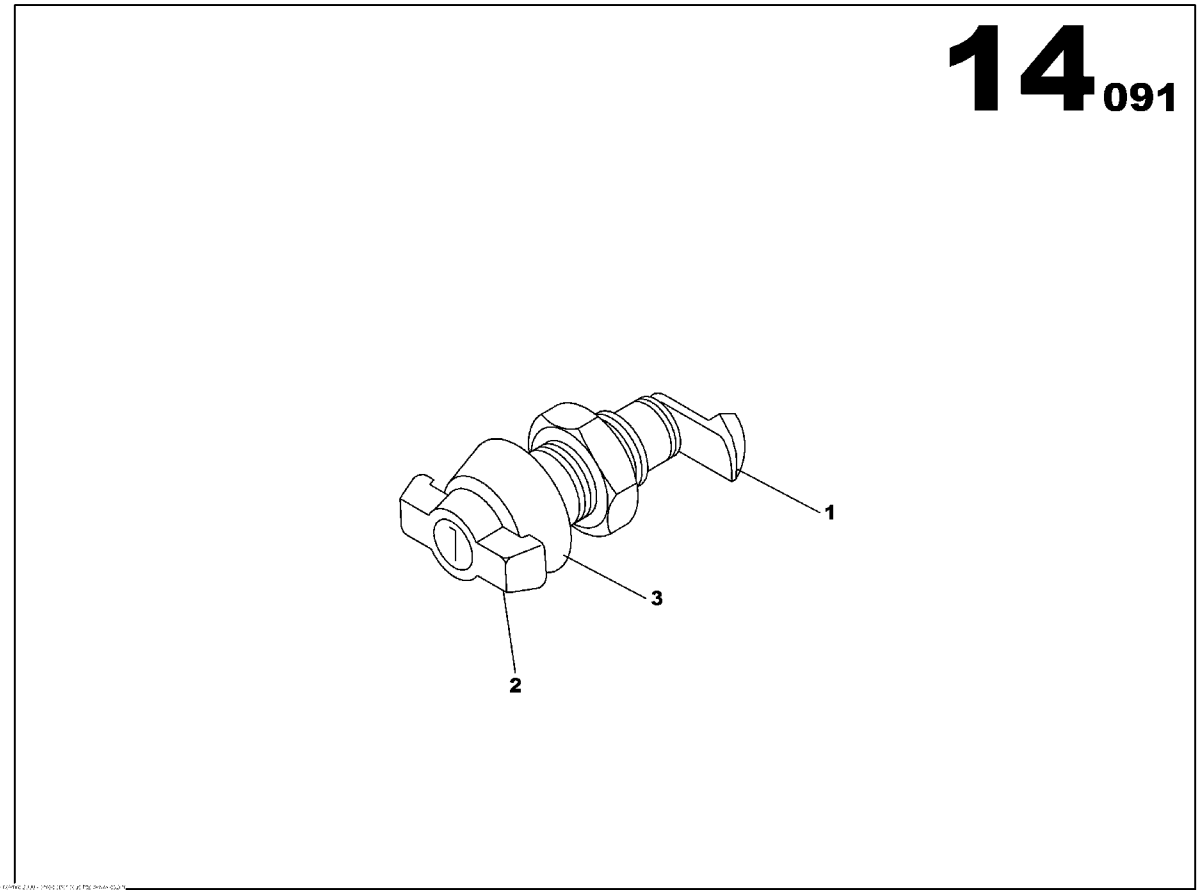

SLAM SHUT ASSEMBLY
85402907

Part numbers listed are only parts used in this model

Item	Part No.	Description	Qty	Un	From SN	To SN	Order PN	Page
1	85406221	SLAM SHUT DOOR LATCH	1	UN			85406221	
2	85406239	SLAM SHUT LATCH HANDLE	1	UN			85406239	93
3	85406247	SLAM SHUT FASTENER	1	UN			85406247	

SLAM SHUT LATCH HANDLE

Non illustré
Not illustrated

SLAM SHUT LATCH HANDLE
85406239

Part numbers listed are only parts used in this model

Item	Part No.	Description	Qty	Un	From SN	To SN	Order PN	Page
1	85632883	WBH LATCHE KEY	1	UN			85632883	

EMERGENCY STOP PANEL ASSEMBLY

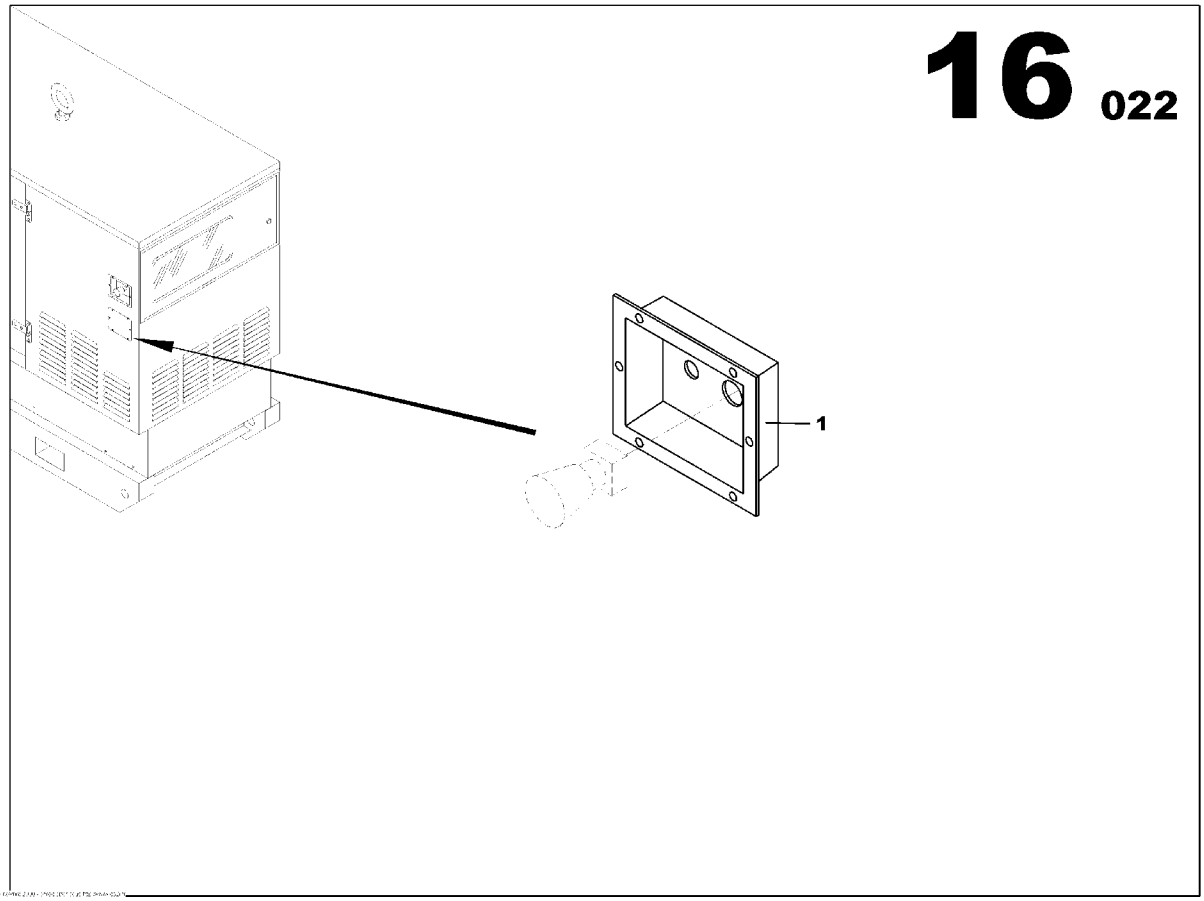

EMERGENCY STOP PANEL ASSEMBLY
85491991

Part numbers listed are only parts used in this model

Item	Part No.	Description	Qty	Un	From SN	To SN	Order PN	Page
1	85407294	EMERGENCY STOP PANEL	1	UN			85407294	

ELECTRICAL FUNCTION

Non illustré
Not illustrated

ELECTRICAL FUNCTION

Part numbers listed are only parts used in this model

Item	Part No.	Description	Qty	Un	From SN	To SN	Order PN	Page
1		ELECTRIC SUPPLY FUNCTION	1	UN				99

ELECTRIC SUPPLY FUNCTION

Non illustré
Not illustrated

ELECTRIC SUPPLY FUNCTION

Part numbers listed are only parts used in this model

Item	Part No.	Description	Qty	Un	From SN	To SN	Order PN	Page
1	85499838	STANDARD DASHBOARD ASSEMBLY IR G20	1	UN			85499838	101

STANDARD DASHBOARD ASSEMBLY IR G20

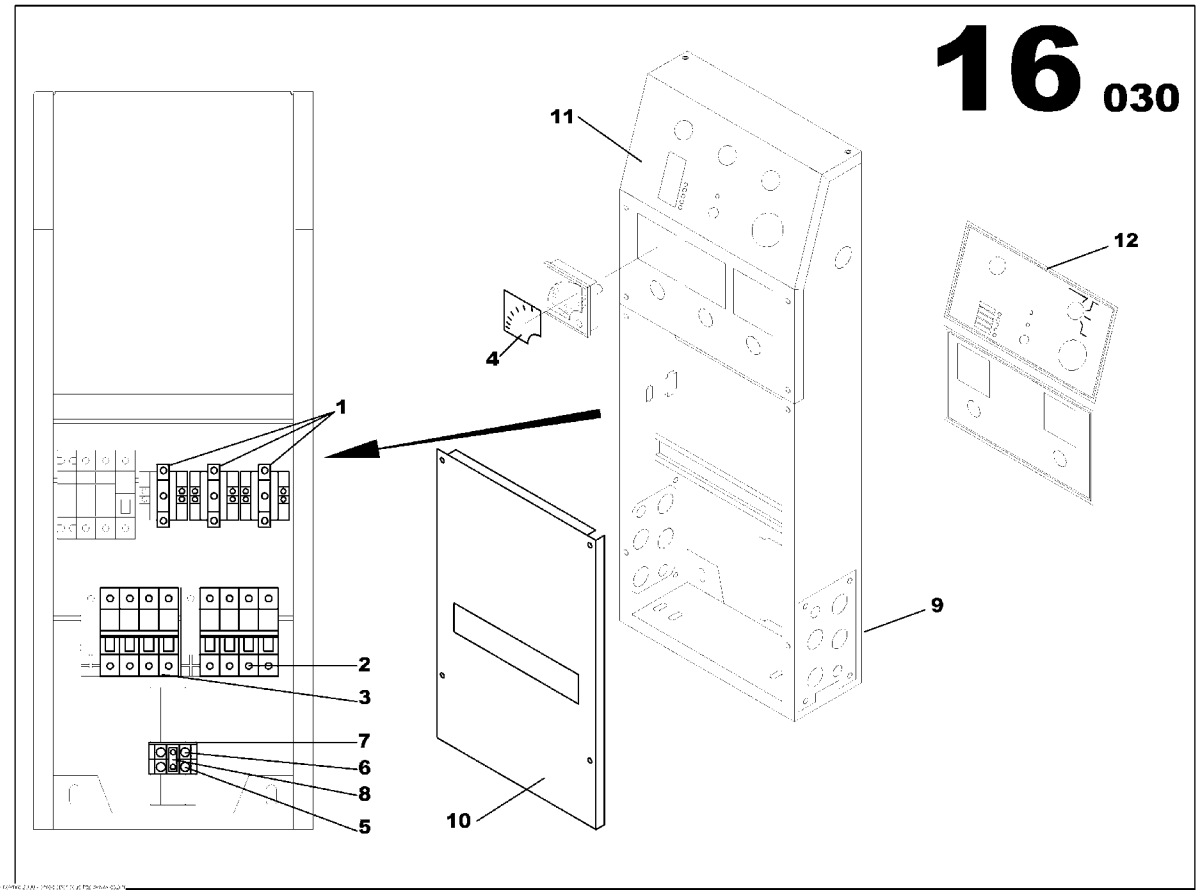

STANDARD DASHBOARD ASSEMBLY IR G20
85499838

Part numbers listed are only parts used in this model

Item	Part No.	Description	Qty	Un	From SN	To SN	Order PN	Page
1	85408417	CURRENT TRANSFORMER 60/5	3	UN			85408417	
2	85413185	MOULDED CASE CIRCUIT BREAKER 4x25A	1	UN			85413185	
3	85413193	MOULDED CASE CIRCUIT BREAKER 4x50A	1	UN			85413193	
4	85413250	AMPERMETRIC SCALE	1	UN			85413250	
5	85426229	TERMINAL BLOCK	1	UN			85426229	
6	85505642	BLUE CONNECTING TERMINAL	1	UN			85505642	
7	85505675	PLASTIC COVER TERMINAL BLOCK	1	UN			85505675	
8	85505618	TERMINAL JUNCTION	1	UN			85505618	
9	85415180	HOUSING ASSEMBLY	1	UN			85415180	103
10	17130436	CIRCUIT BREAKER PROTECTION PANEL OPTION	1	UN			17130436	105
11	85414985	M150 PANEL ASSEMBLY	1	UN			85414985	107
12	85499812	IR PLASTIC PLATE OPTION	1	UN			85499812	111

HOUSING ASSEMBLY

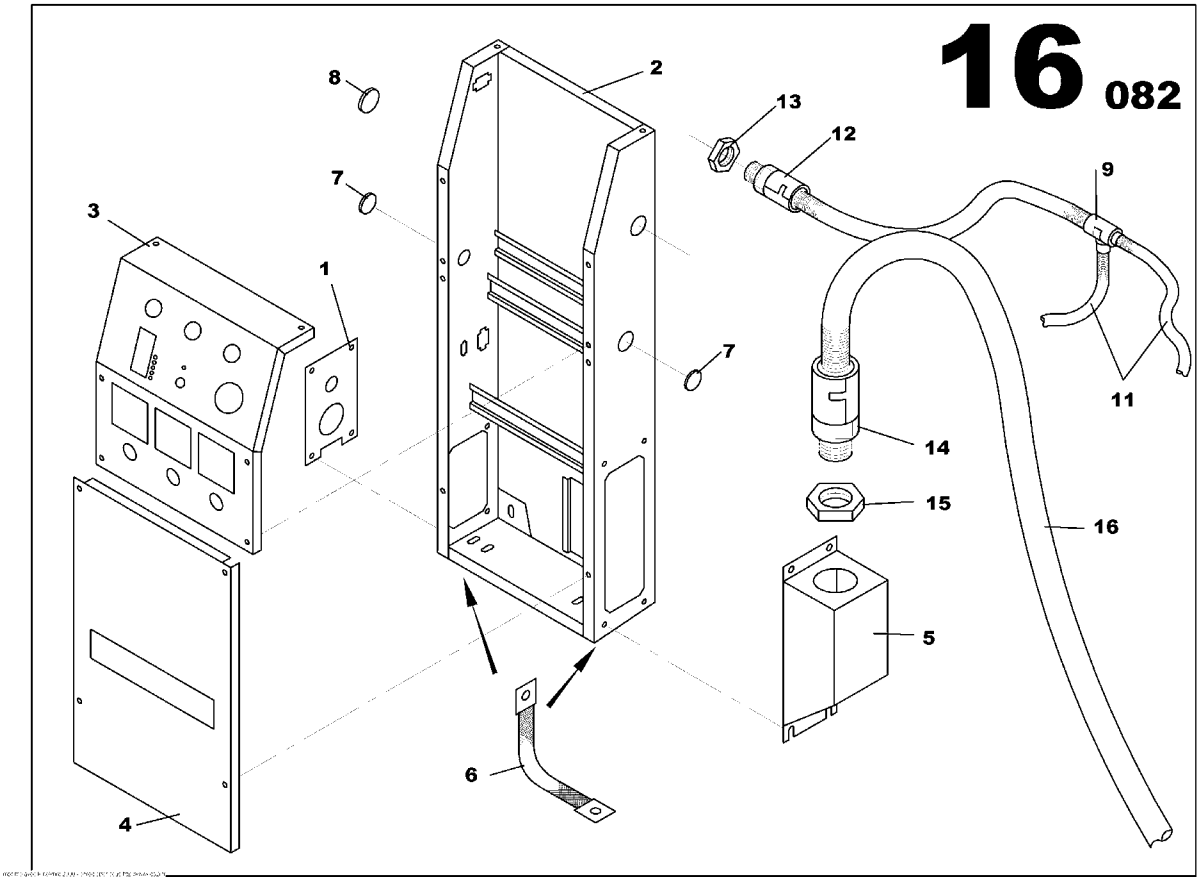

HOUSING ASSEMBLY
85415180

Part numbers listed are only parts used in this model

Item	Part No.	Description	Qty	Un	From SN	To SN	Order PN	Page
1	85416121	GLAND NUT PLATE M50/M150	1	UN			85416121	
2	85416238	DASHBOARD BRACKET	1	UN			85416238	
3	85413136	CONTROL PANEL COVER	1	UN			85413136	
4	85413144	CONTROL PANEL COVER	1	UN			85413144	
5	85505550	CONNECTION HOUSING	1	UN			85505550	
6	85505543	GROUND WIRES 16mm2	2	UN			85505543	
7	85415388	RUBBER GROMMET D22	4	UN			85415388	
8	85415396	RUBBER GROMMET D18	2	UN			85415396	
9	85505568	T-PIECE 16*13*13	1	UN			85505568	
11	85505584	ELECTRICAL SHAFT D13	1	ML			85505584	
12	85505592	ELECTRICAL UNION	1	UN			85505592	
13	85408664	GLAND NUT SCREW PG16	1	UN			85408664	
14	85501575	PIPE UNION PG36	1	UN			85501575	
15	85408680	GLAND NUT SCREW PG36	1	UN			85408680	
16	85499440	ELECTRICAL SHAFT D36	1	UN			85499440	

CIRCUIT BREAKER PROTECTION PANEL OPTION

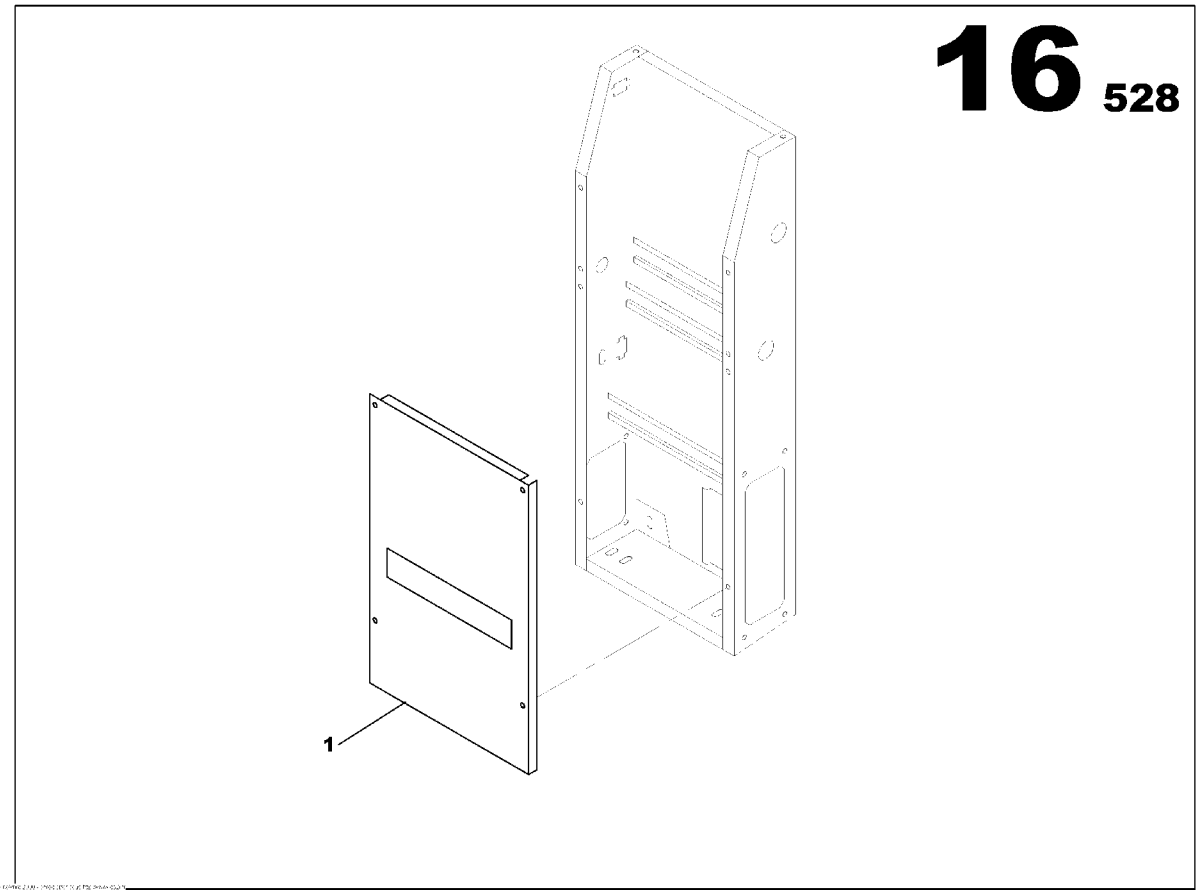

CIRCUIT BREAKER PROTECTION PANEL OPTION
17130436

Part numbers listed are only parts used in this model

Item	Part No.	Description	Qty	Un	From SN	To SN	Order PN	Page
1	85413144	CONTROL PANEL COVER	1	UN			85413144	

M150 PANEL ASSEMBLY

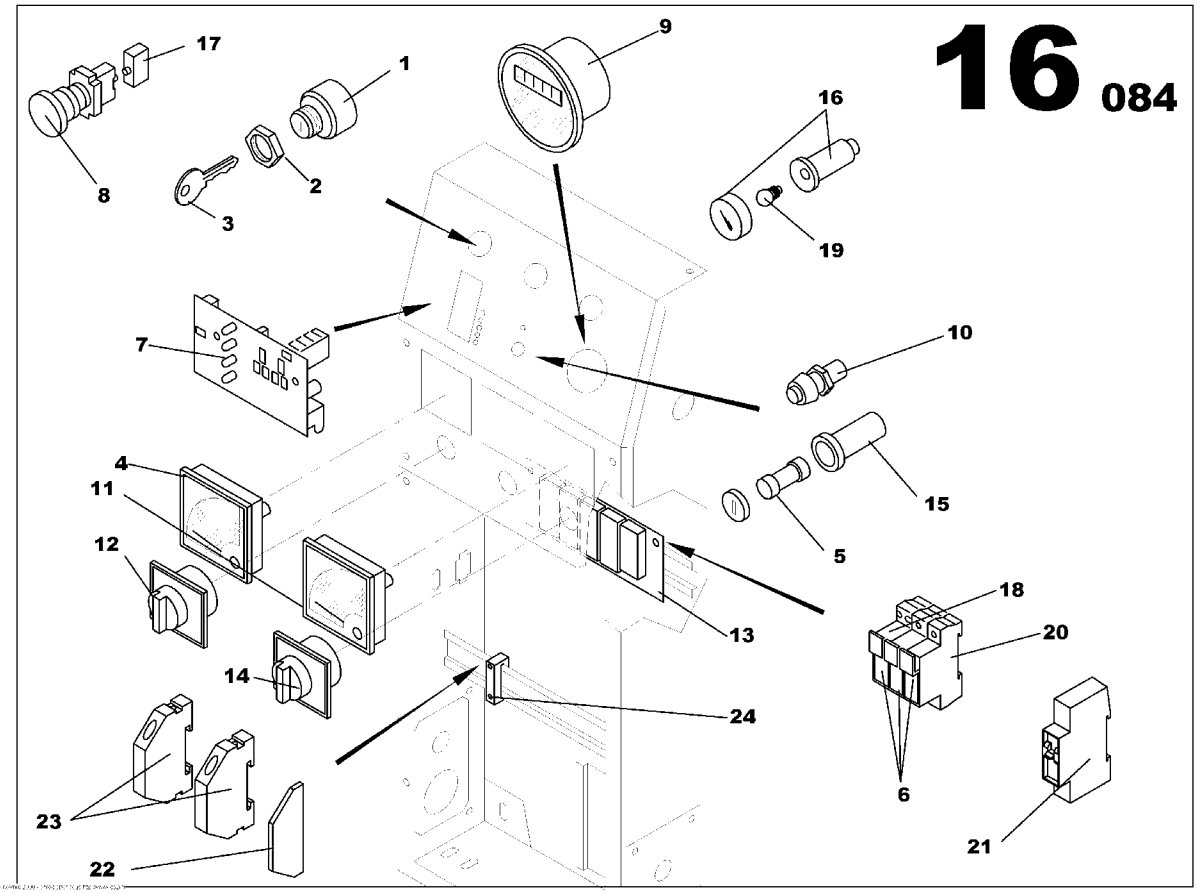

M150 PANEL ASSEMBLY
85414985

Part numbers listed are only parts used in this model

Item	Part No.	Description	Qty	Un	From SN	To SN	Order PN	Page
1	85412948	KEY SELECTOR SWITCH	1	UN			85412948	
2	85413268	SWITCH NUT	1	UN			85413268	
3	85412872	KEY SWITCH	1	UN			85412872	
4	85416519	VOLTMETER 0/500V	1	UN			85416519	
5	85413482	FUSE CYLINDRICAL 5A	1	UN			85413482	
6	85413490	FUSE CYLINDRICAL 6A	3	UN			85413490	
7	85402527	CARD PGS	1	UN			85402527	
8	85632370	EMRGENCY STOP BUTTON ASSEMBLY	1	UN	03002408		85632370	109
9	85412971	HOUR METER	1	UN			85412971	
10	85412609	PUSH BUTTON D12	1	UN			85412609	
11	85402477	AMMETER WITH NEEDLE 72x72	1	UN			85402477	
12	85412955	VOLTMETER SELECTOR SWITCH	1	UN			85412955	
13	85402576	CARD RD2	1	UN			85402576	
14	85412930	AMMETER SELECTOR SWITCH	1	UN			85412930	
15	85415503	FUSE HOUSING 10.5x38	1	UN			85415503	
16	85416527	PANEL LIGHT CYLINDRIC D22	1	UN			85416527	
17	85508638	AUXILARY CONTACT NO+NC	2	UN			85508638	
18	85413508	NEUTRAL FUSE CYLINDRICAL	1	UN			85413508	
19	85402519	LAMP 12V BA9S TYPE	1	UN			85402519	
20	85490472	FUSE HOLDER	1	UN			85490472	
21	85500379	MOULDED CASE CIRCUIT BREAKER 1x16A	1	UN			85500379	
22	85505683	PLASTIC COVER TERMINAL BLOCK	1	UN			85505683	
23	85505691	TERMINAL CONNECTION	2	UN			85505691	
24	85408854	STOP	7	UN			85408854	

EMRGENCY STOP BUTTON ASSEMBLY

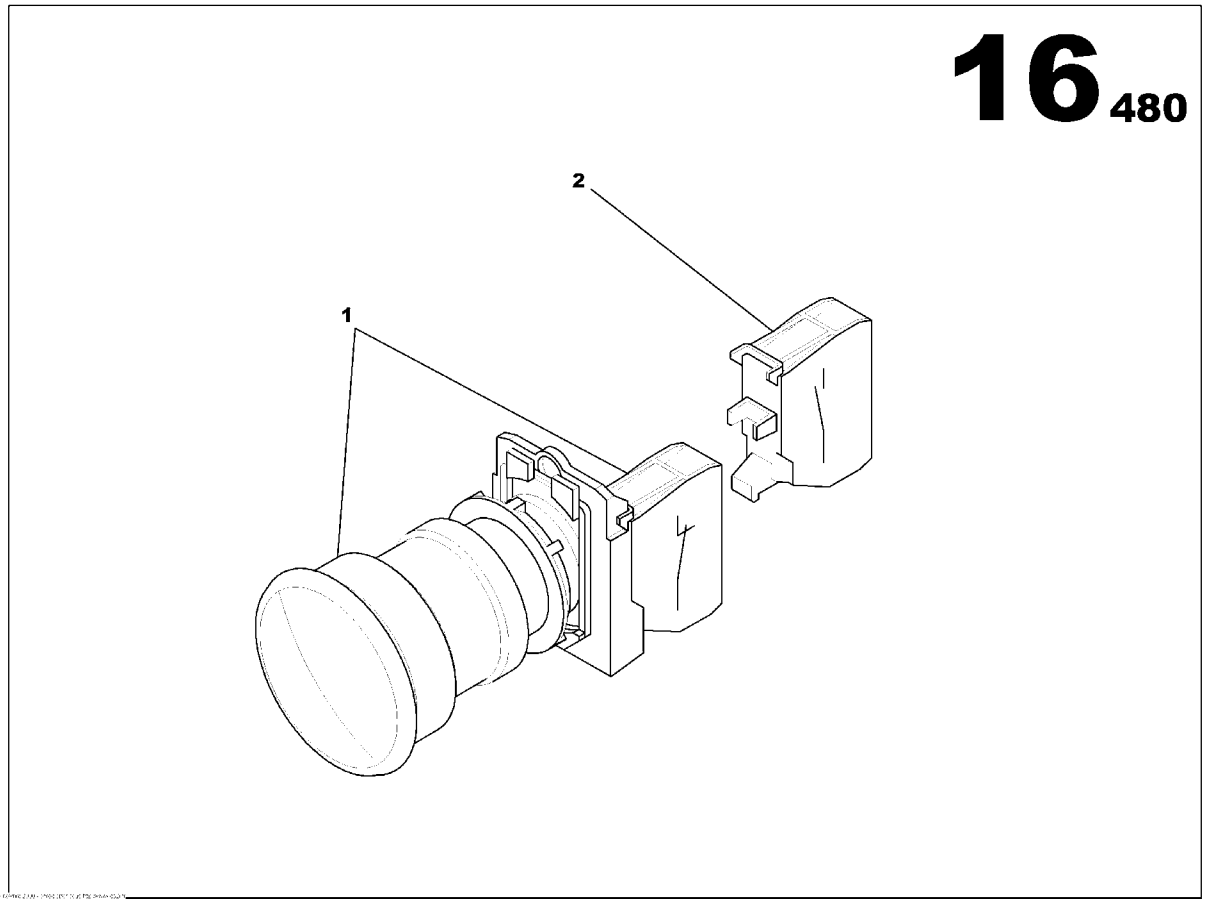

EMRGENCY STOP BUTTON ASSEMBLY
85632370

Part numbers listed are only parts used in this model

Item	Part No.	Description	Qty	Un	From SN	To SN	Order PN	Page
1	85631422	EMERGENCY STOP BUTTON	1	UN			85631422	
2	85632362	AUXILARY CONTACT NO	1	UN			85632362	

IR PLASTIC PLATE OPTION

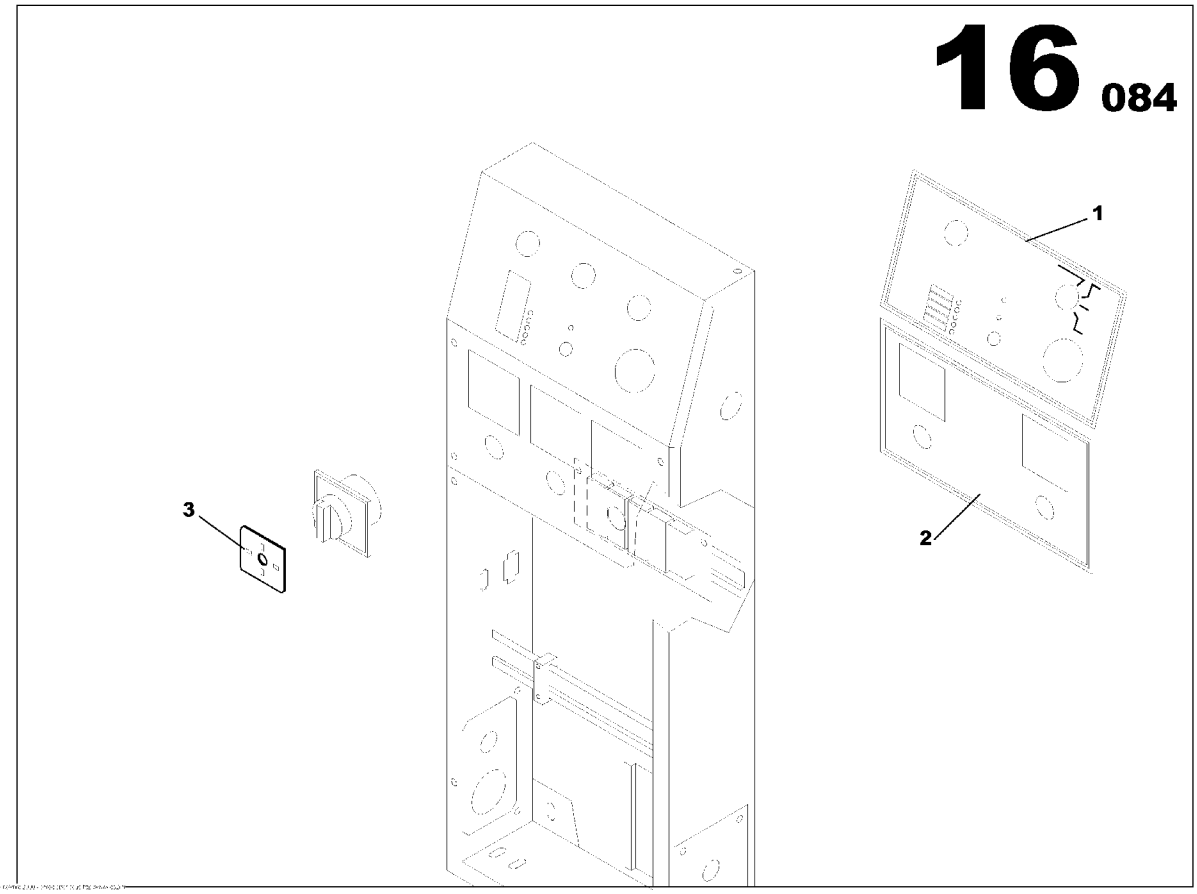

IR PLASTIC PLATE OPTION
85499812

Part numbers listed are only parts used in this model

Item	Part No.	Description	Qty	Un	From SN	To SN	Order PN	Page
1	85505634	PLASTIC PLATE L2450xh140	1	UN			85505634	
2	85413797	PLASTIC PLATE L235xh245	1	UN			85413797	
3	85505659	AMPEREMETRE INDICATOR PLATE	1	UN			85505659	

POWER CONNECTION BLOCK FUNCTION

Non illustré
Not illustrated

POWER CONNECTION BLOCK FUNCTION

Part numbers listed are only parts used in this model

Item	Part No.	Description	Qty	Un	From SN	To SN	Order PN	Page
1	85498947	SOCKET PANEL M107 ASSEMBLY	1	UN			85498947	115
2	85498954	TERMINAL M107 ASSEMBLY	1	UN			85498954	121

SOCKET PANEL M107 ASSEMBLY

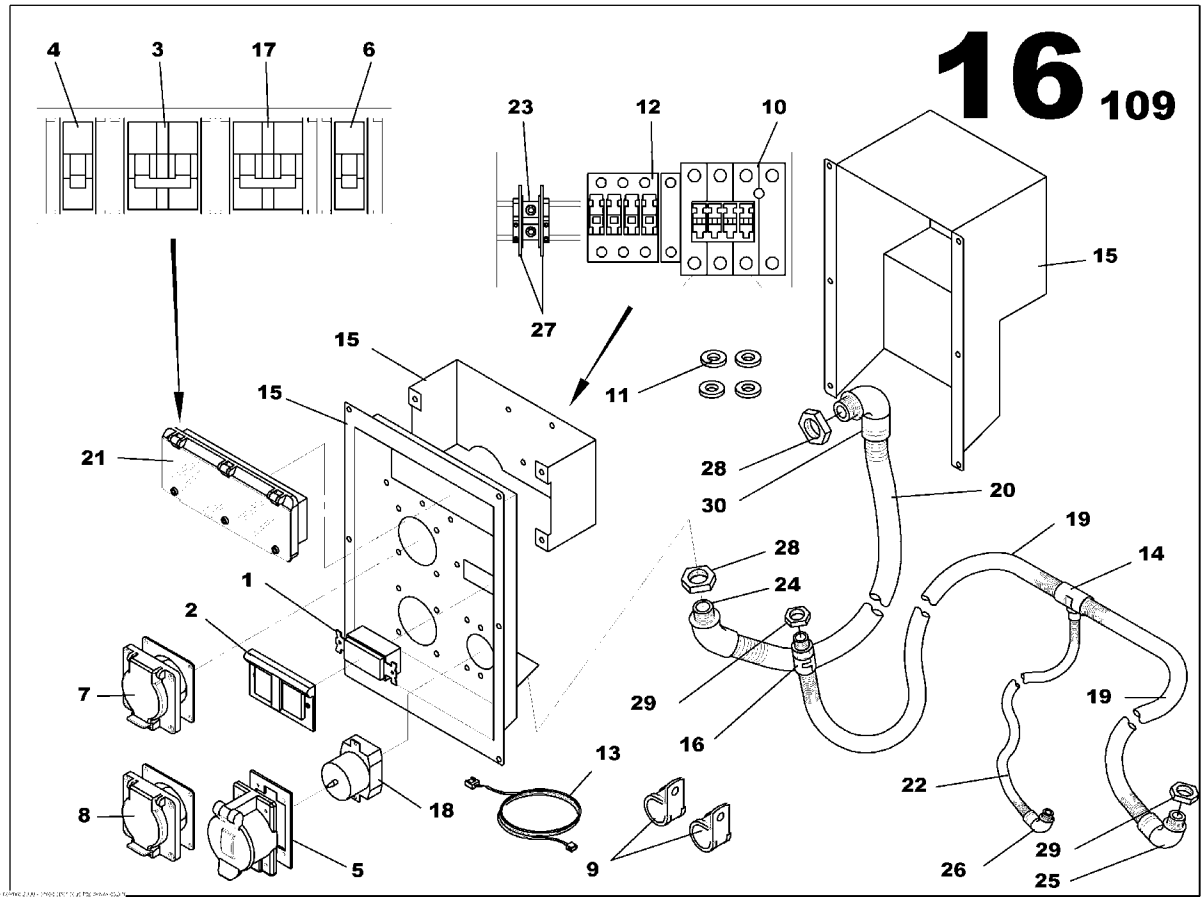

SOCKET PANEL M107 ASSEMBLY
85498947

Part numbers listed are only parts used in this model

Item	Part No.	Description	Qty	Un	From SN	To SN	Order PN	Page
1	17130675	SOCKET USA 125V 20A 2S+G	1	UN	03000069		17130675	
2	85426641	SOCKETS COVER	1	UN			85426641	
3	17130642	MOULDED CASE CIRCUIT BREAKER 2x32A	1	UN	03000069		17130642	
4	17130634	MOULDED CASE CIRCUIT BREAKER 1x32A	1	UN	03000069		17130634	
5	85408995	SOCKETS COVER	1	UN			85408995	
6	17130667	MOULDED CASE CIRCUIT BREAKER 1x20A	1	UN	03000069		17130667	
7	85426583	SOCKET USA 125V 30A 2S+G	1	UN			85426583	
8	85499721	SOCKET USA 250V 30A 3S+G	1	UN			85499721	
9	17130816	CLAMP D20	2	UN			17130816	
10	85426658	CONTACTOR 4NO	1	UN			85426658	
11	17130873	SPACER	4	UN			17130873	
12	85426666	CONTACTOR 2NO+2NC	1	UN			85426666	
13	85500346	WIRING LOOM CONNECTIONS BLOCK	1	UN			85500346	
14	85492114	T-PIECE 23*23*11	1	UN			85492114	
15	85498988	SOCKET ASSEMBLY	1	UN			85498988	119
16	17130600	PIPE UNION PG21	1	UN			17130600	
17	17130659	MOULDED CASE CIRCUIT BREAKER 2x50A	1	UN	03000069		17130659	
18	85408946	SOCKET USA 250V 50A 2S+G	1	UN			85408946	
19	85499291	ELECTRICAL SHAFT D23	1	ML			85499291	
19	85499291	ELECTRICAL SHAFT D23	0.5	ML			85499291	
20	85499440	ELECTRICAL SHAFT D36	0.8	ML			85499440	
21	85408284	CIRCUIT BREAKER SUPPORT PLATE 12 MODULES	1	UN			85408284	
22	85499283	ELECTRICAL SHAFT D10	0.9	ML			85499283	
23	85499606	TERMINAL BLOCK	2	UN			85499606	
24	85499697	PIPE UNION ELBOW 45° PG36	1	UN			85499697	
25	85500502	PIPE UNION ELBOW 90° PG21	1	UN			85500502	
26	85500494	PIPE UNION ELBOW 90° PG29	1	UN			85500494	
27	85408714	PHASE ISOLATOR	1	UN			85408714	

SOCKET PANEL M107 ASSEMBLY

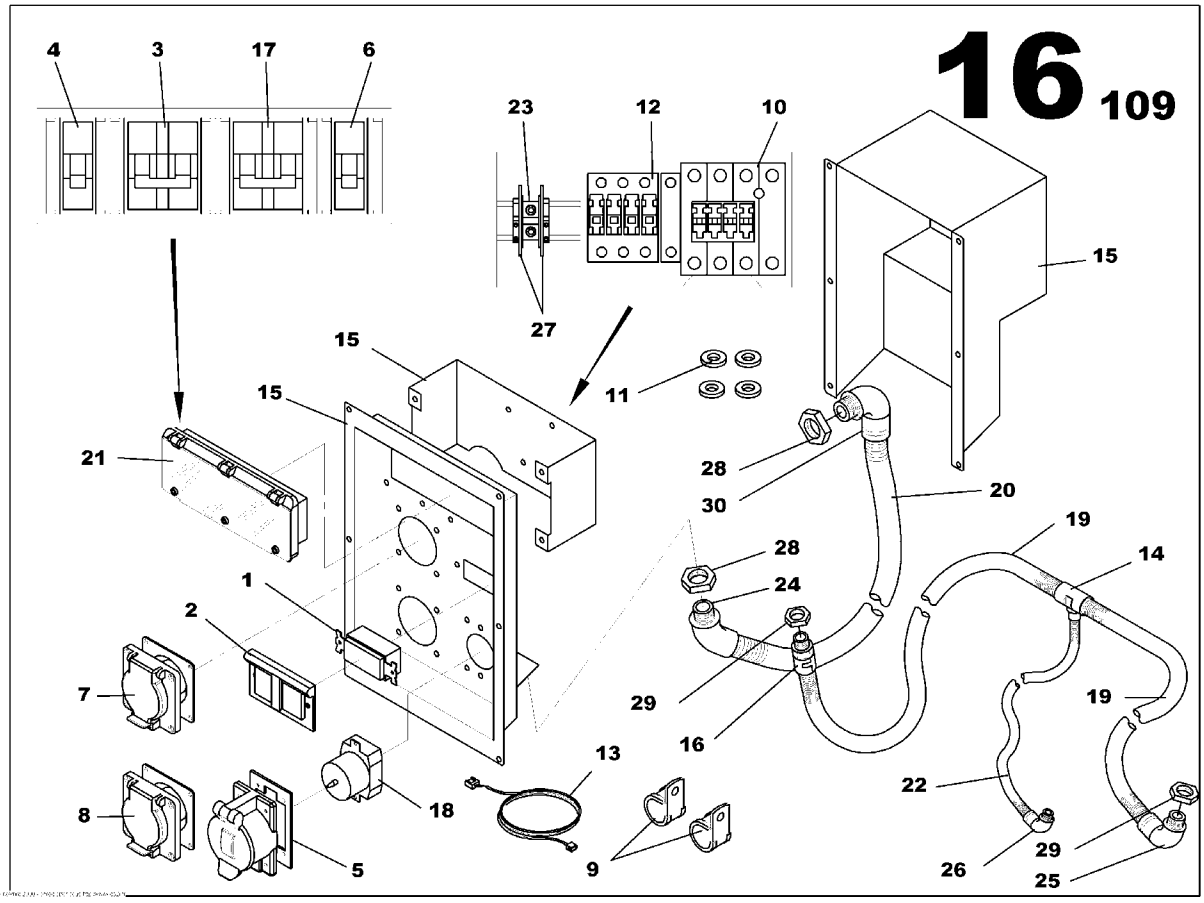

SOCKET PANEL M107 ASSEMBLY
85498947

Part numbers listed are only parts used in this model

Item	Part No.	Description	Qty	Un	From SN	To SN	Order PN	Page
28	85408680	GLAND NUT SCREW PG36	2	UN			85408680	
29	85408672	GLAND NUT SCREW PG21	2	UN			85408672	
30	85499689	PIPE UNION ELBOW 90° PG36	1	UN			85499689	

SOCKET ASSEMBLY

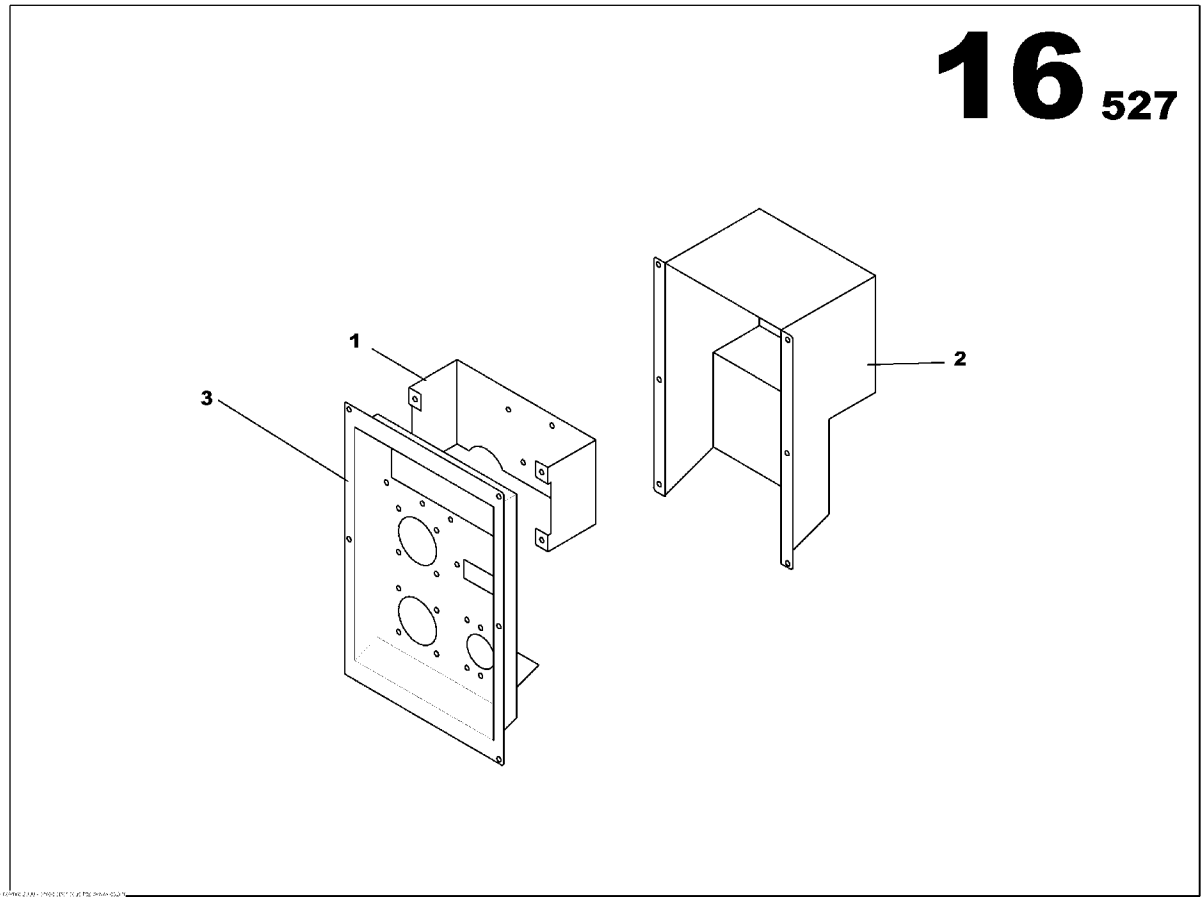

SOCKET ASSEMBLY
85498988

Part numbers listed are only parts used in this model

Item	Part No.	Description	Qty	Un	From SN	To SN	Order PN	Page
1	85499127	CONTACTOR BRACKET	1	UN			85499127	
2	85499135	ELECTRIC PANEL HOUSING US COVER M107	1	UN			85499135	
3	85499143	SOCKETS PANEL EC M107	1	UN			85499143	

TERMINAL M107 ASSEMBLY

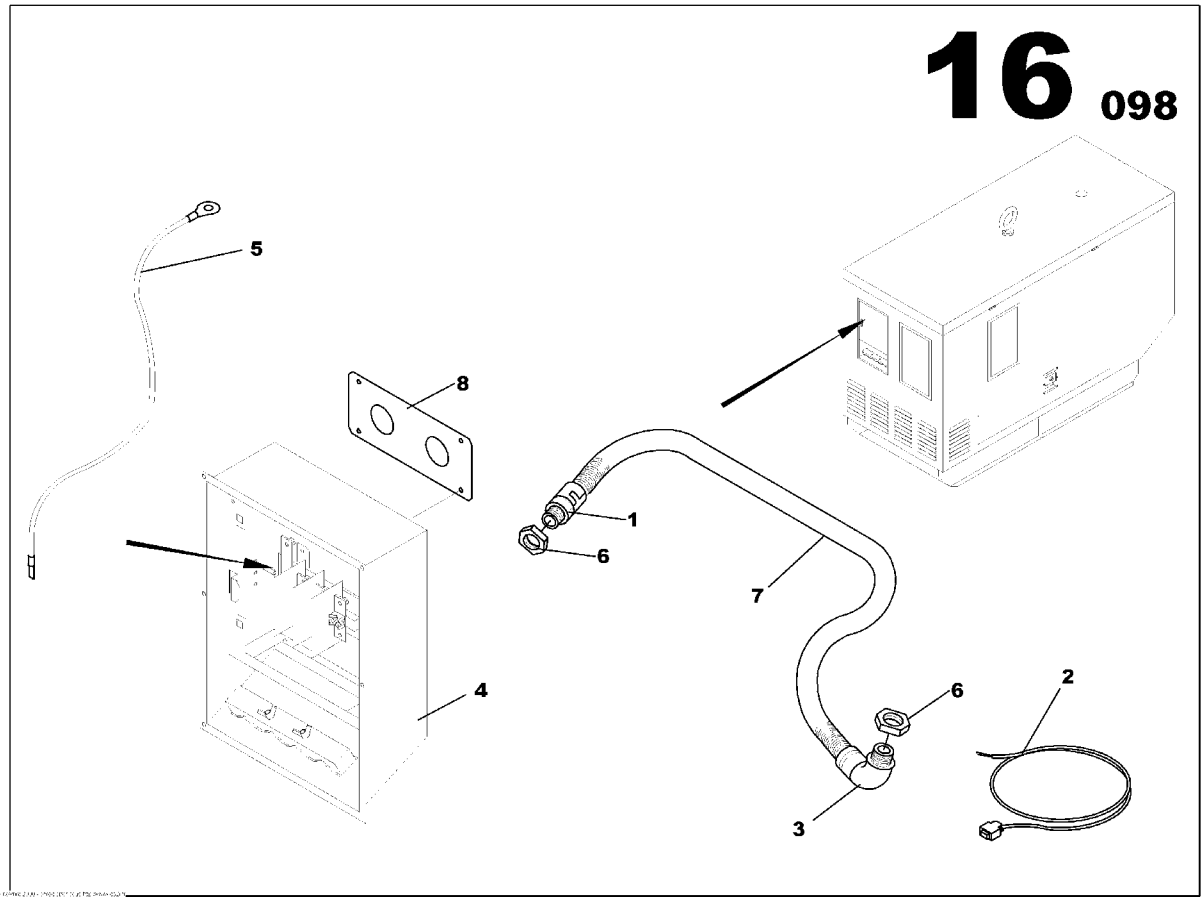

TERMINAL M107 ASSEMBLY
85498954

Part numbers listed are only parts used in this model

Item	Part No.	Description	Qty	Un	From SN	To SN	Order PN	Page
1	85501575	PIPE UNION PG36	1	UN			85501575	
2	85499184	WIRING LOOM CONNECTIONS BLOCK	1	UN			85499184	
3	85499689	PIPE UNION ELBOW 90° PG36	1	UN			85499689	
4	85498921	CONNECTION MCPS ASSEMBLY	1	UN			85498921	123
5	17131129	CABLE 1x35mm2	2	ML			17131129	
6	85408680	GLAND NUT SCREW PG36	2	UN			85408680	
7	85499440	ELECTRICAL SHAFT D36	1.1	ML			85499440	
8	85499150	GLAND NUT PLATE TERMINAL CONNECTION M107	1	UN			85499150	

CONNECTION MCPS ASSEMBLY

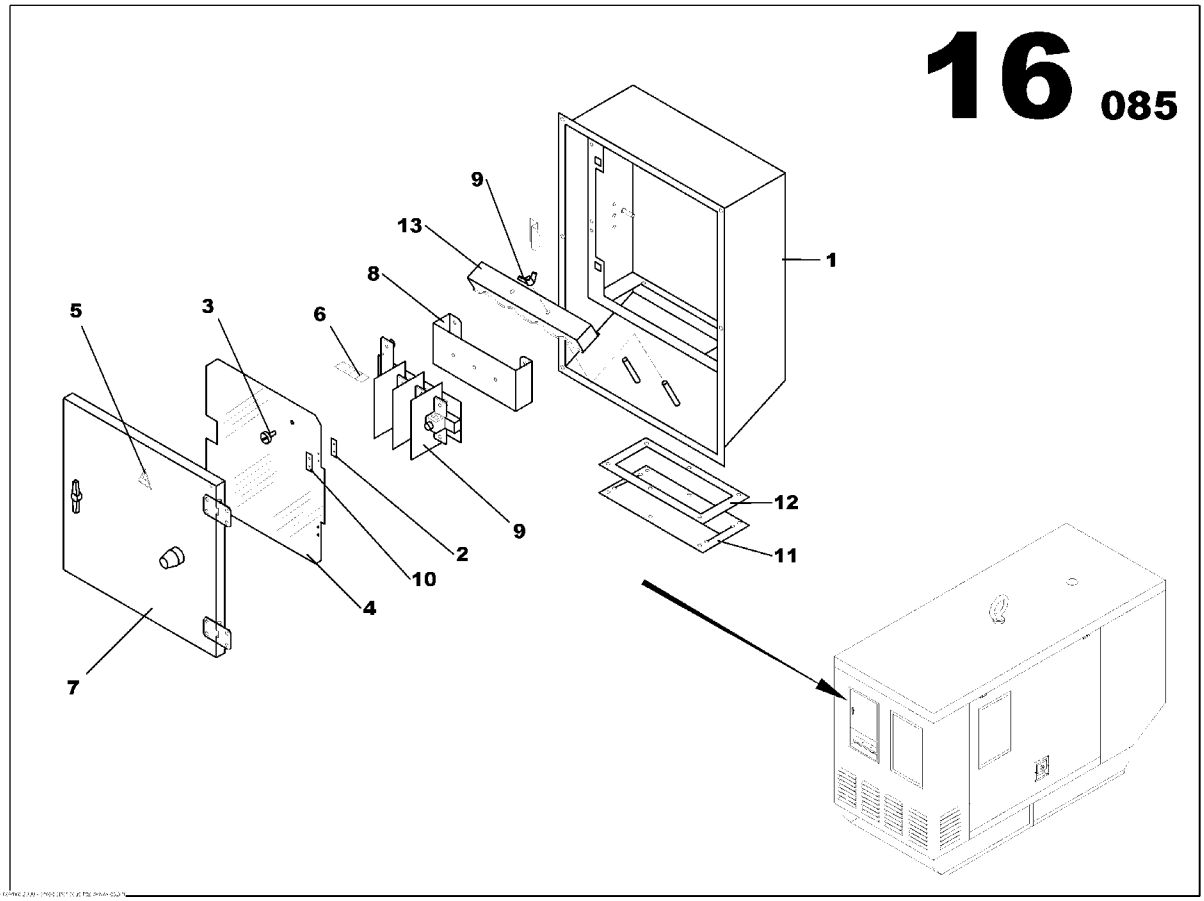

CONNECTION MCPS ASSEMBLY
85498921

Part numbers listed are only parts used in this model

Item	Part No.	Description	Qty	Un	From SN	To SN	Order PN	Page
1	85416048	MCPS BRACKET	1	UN			85416048	
2	85407708	HINGE FIXING PLATE M214	2	UN			85407708	
3	85409217	SLAM SHUT ASSEMBLY	1	UN			85409217	131
4	85415545	TERMINAL CONNECTION DOOR M107	1	UN			85415545	
5	85409084	STICKER EARTH SYMBOL	1	UN			85409084	
6	85499887	STICKER TERMINAL BLOCK	1	UN			85499887	
7	85414860	PANEL DOOR M107 ASSEMBLY	1	UN			85414860	125
8	85415933	TERMINAL BRACKET	1	UN			85415933	
9	85410140	WING NUT M8	2	UN			85410140	
10	85407690	DOOR SHIM ASSEMBLY	2	UN			85407690	
11	85412534	CABLE OUTPUT RUBBER SCREEN	1	UN			85412534	
12	85415982	WIRE BIB OUTPUT BRACKET	1	UN			85415982	
13	85416030	FUEL FILTER BRACKET	1	UN			85416030	

PANEL DOOR M107 ASSEMBLY

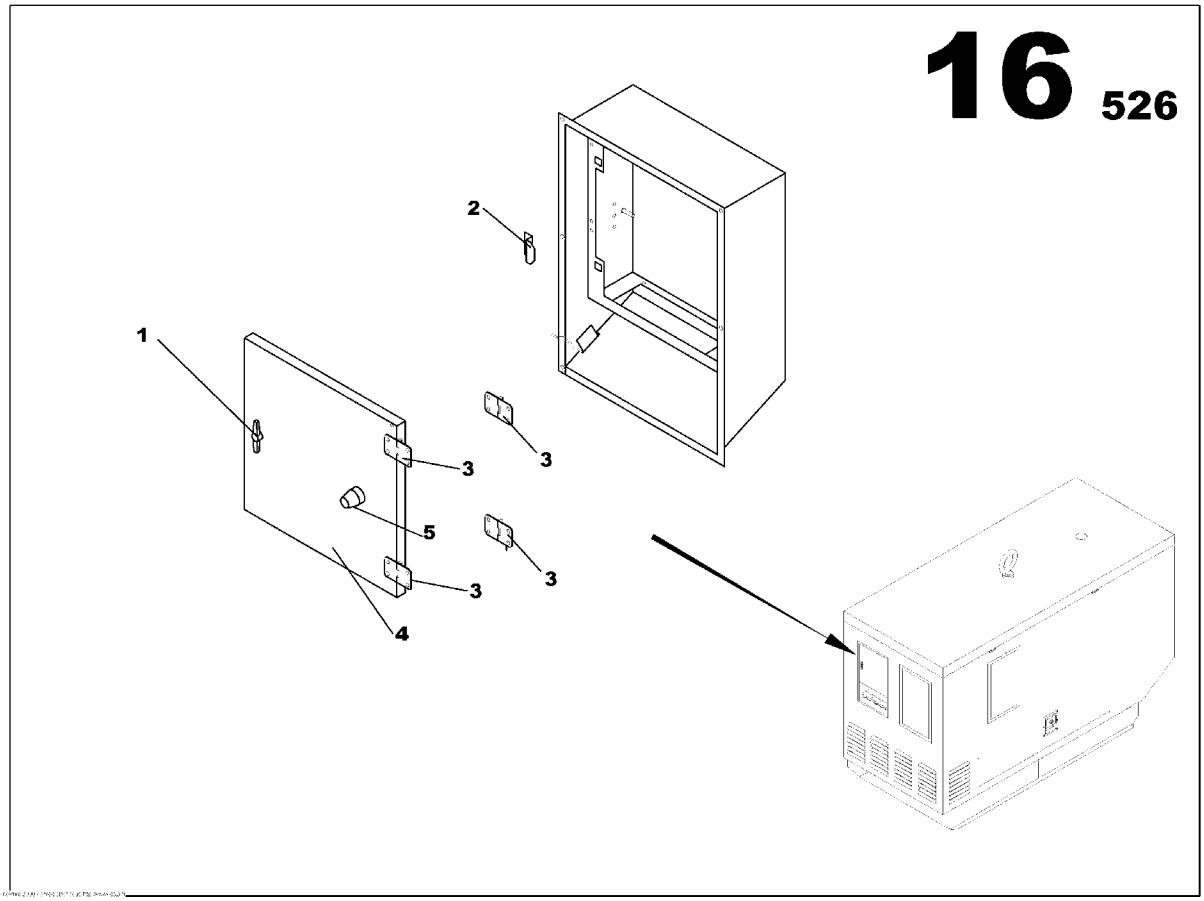

PANEL DOOR M107 ASSEMBLY
85414860

Part numbers listed are only parts used in this model

Item	Part No.	Description	Qty	Un	From SN	To SN	Order PN	Page
1	85402907	SLAM SHUT ASSEMBLY	1	UN			85402907	127
2	85407682	STRIKER PLATE CANOPY MCPS DOOR	1	UN			85407682	
3	85406130	DOOR HINGE	4	UN			85406130	
4	85415537	TERMINAL CONNECTION DOOR M107	1	UN			85415537	
5	85406189	ANTI-VIBRATION MOUNT 140daN 15mm	1	UN			85406189	

SLAM SHUT ASSEMBLY

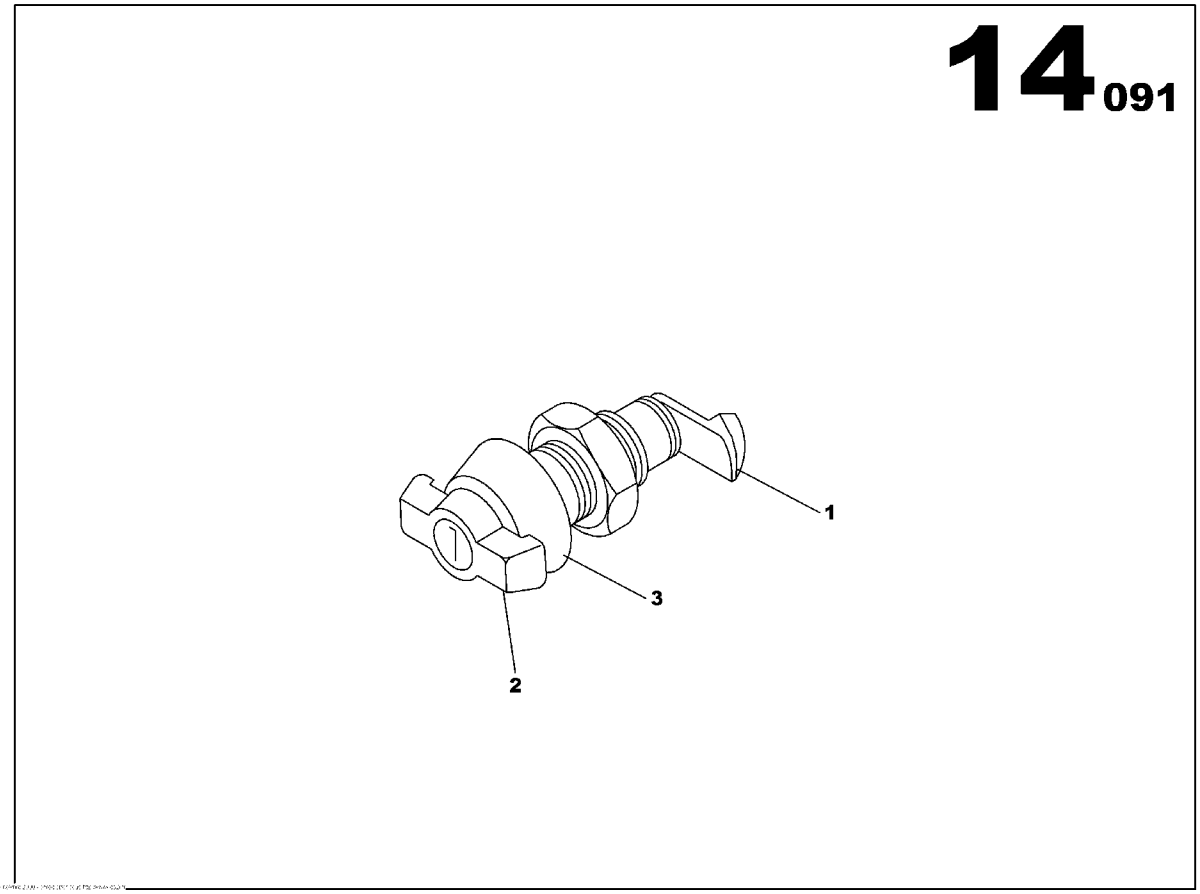

SLAM SHUT ASSEMBLY
85402907

Part numbers listed are only parts used in this model

Item	Part No.	Description	Qty	Un	From SN	To SN	Order PN	Page
1	85406221	SLAM SHUT DOOR LATCH	1	UN			85406221	
2	85406239	SLAM SHUT LATCH HANDLE	1	UN			85406239	129
3	85406247	SLAM SHUT FASTENER	1	UN			85406247	

SLAM SHUT LATCH HANDLE

Non illustré
Not illustrated

SLAM SHUT LATCH HANDLE
85406239

Part numbers listed are only parts used in this model

Item	Part No.	Description	Qty	Un	From SN	To SN	Order PN	Page
1	85632883	WBH LATCHE KEY	1	UN			85632883	

SLAM SHUT ASSEMBLY

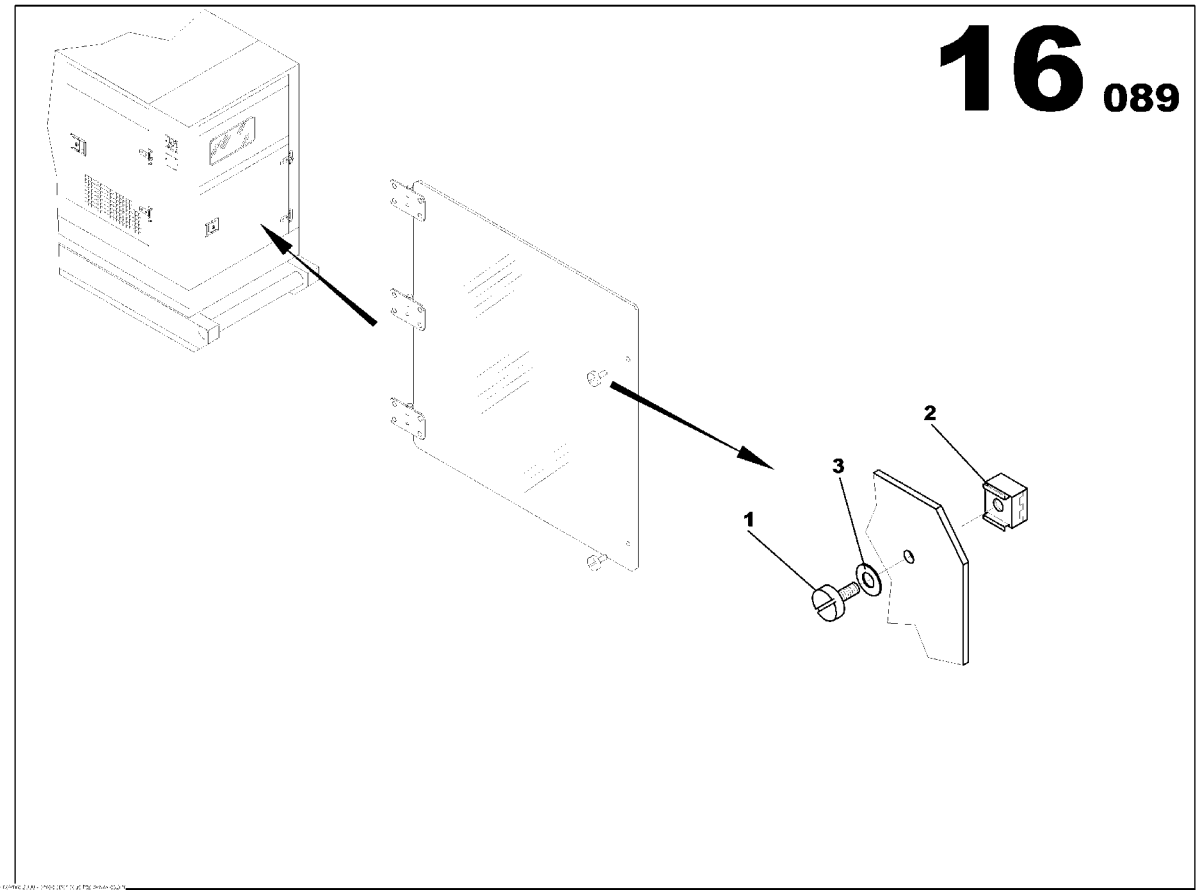

SLAM SHUT ASSEMBLY
85409217

Part numbers listed are only parts used in this model

Item	Part No.	Description	Qty	Un	From SN	To SN	Order PN	Page
1	85409225	1/4 TURN SCREW D9 *-Order 31801021601NE*	2	UN			85409225	
2	85409233	CAPTIVE NUT FOR 1/4 TURN BOLT *-Order 31801021601NE*	2	UN			85409233	
3	85409241	WASHER FOR 1/4 TURN FASTENER *-Order 31801021601NE*	2	UN			85409241	

OIL SUMP DRAIN PUMP KIT

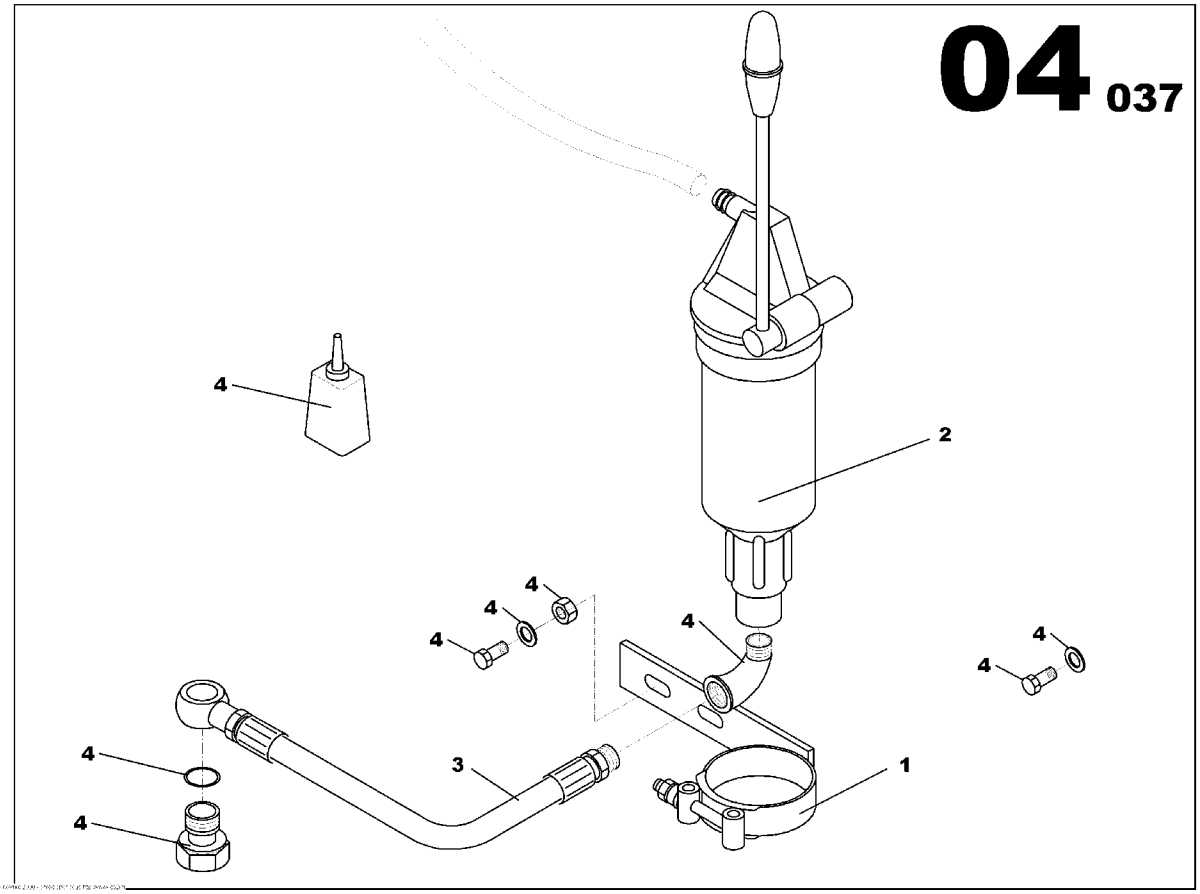

OIL SUMP DRAIN PUMP KIT
54602800

Part numbers listed are only parts used in this model

Item	Part No.	Description	Qty	Un	From SN	To SN	Order PN	Page
1	85403426	OIL SUMP PUMP BRACKET	1	UN			85403426	
2	85403434	MANUAL PUMP	1	UN			85403434	
3	85413474	HOSE L450	1	UN			85413474	
4	85429702	SCREWS ASSEMBLY	1	UN			85429702	135

SCREWS ASSEMBLY

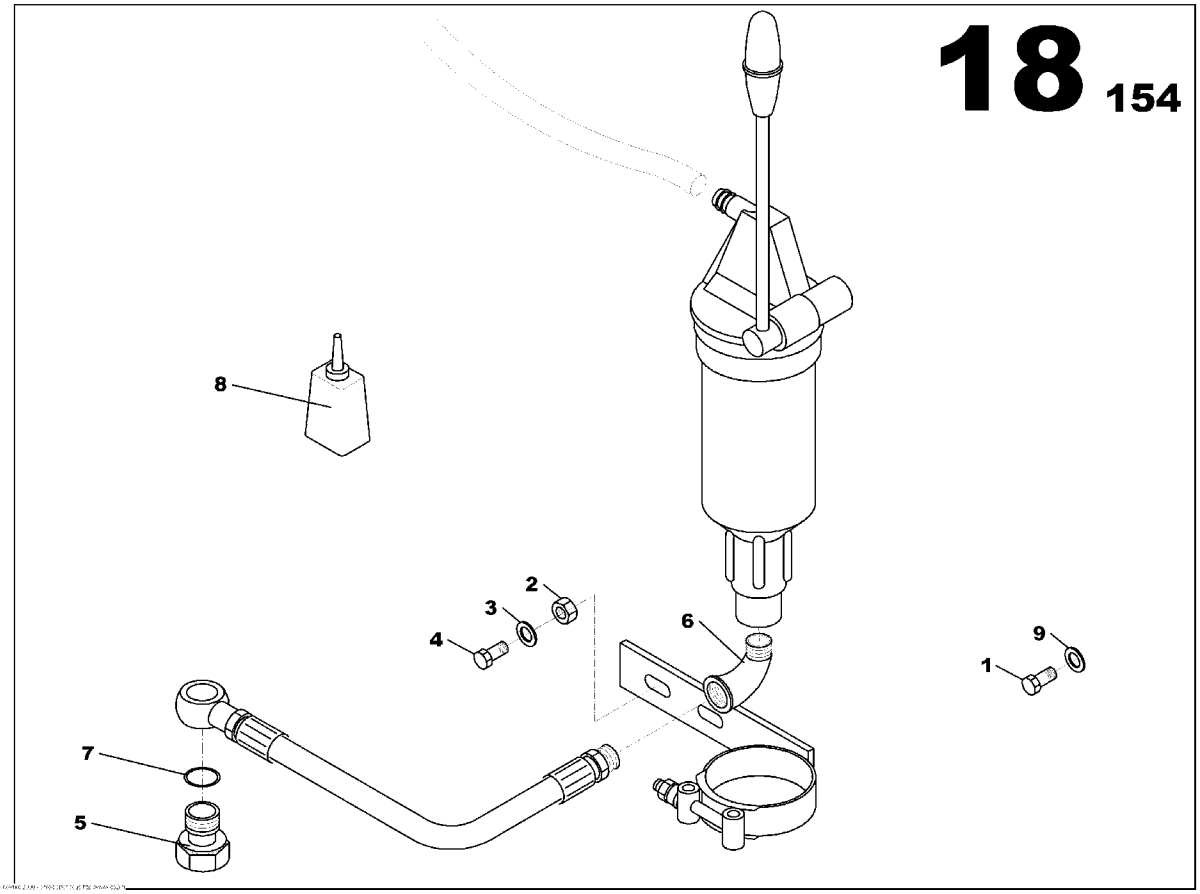

SCREWS ASSEMBLY
85429702

Part numbers listed are only parts used in this model

Item	Part No.	Description	Qty	Un	From SN	To SN	Order PN	Page
1	85409209	SCREW H M12x25	6	UN			85409209	
2	85429769	NUT M12	2	UN			85429769	
3	85429850	WASHER D12	2	UN			85429850	
4	85429926	SCREW H M12x25	2	UN			85429926	
5	85409282	BANJO SCREW M14X150 L26	1	UN			85409282	
6	85409308	PIPE UNION ELBOW 90° MAL/FEM 3/8G	1	UN			85409308	
7	85409522	GASKET D14x20	1	UN			85409522	
8	85430007	LOCTITE CAN	1	UN			85430007	
9	85430171	WASHER 12X27	6	UN			85430171	

3 WAY FUEL VALVE KIT

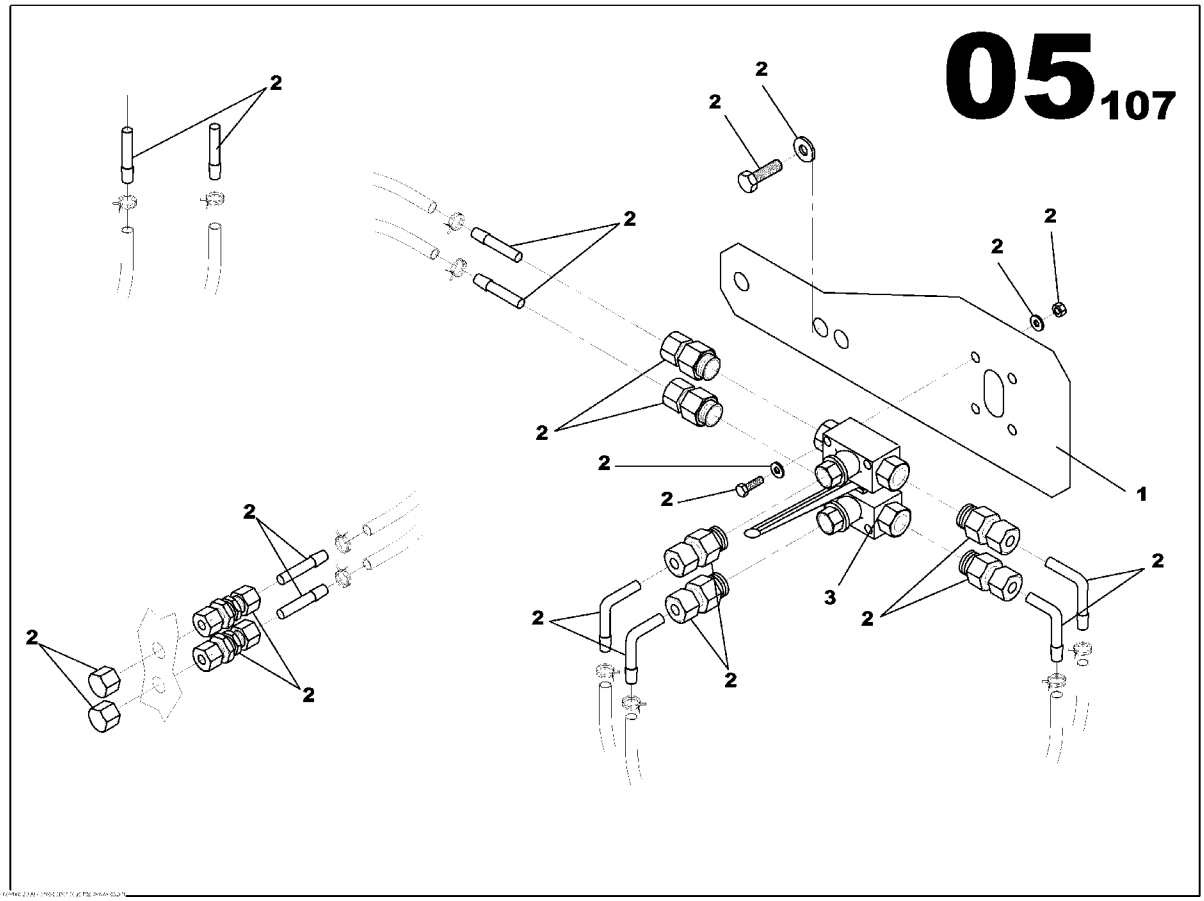

3 WAY FUEL VALVE KIT
17130139

Part numbers listed are only parts used in this model

Item	Part No.	Description	Qty	Un	From SN	To SN	Order PN	Page
1	85633295	3 WAY FUEL VALVE BRACKET	1	UN			85633295	
2	17130774	SCREWS ASSEMBLY	1	UN			17130774	139
3	85631802	3 WAY VALVE	1	UN			85631802	

SCREWS ASSEMBLY

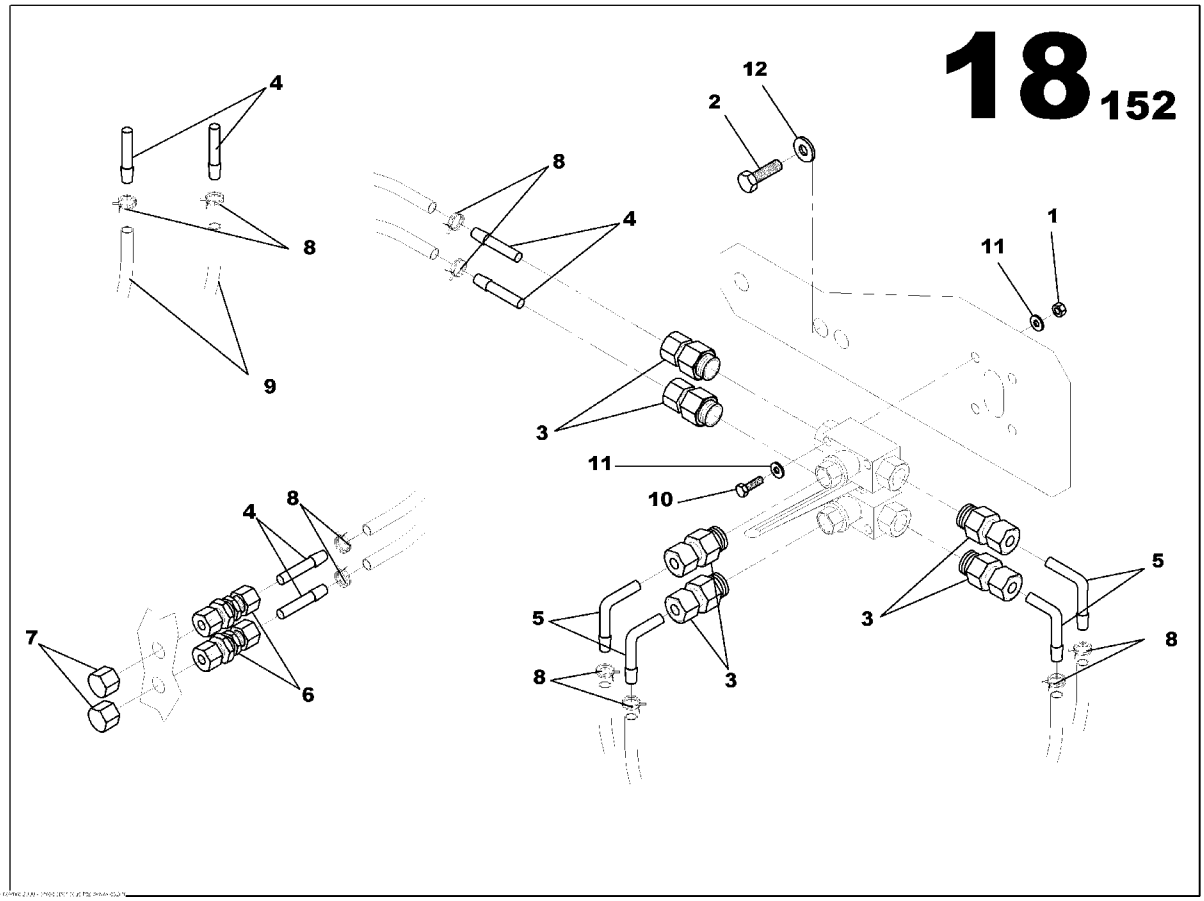

SCREWS ASSEMBLY
17130774

Part numbers listed are only parts used in this model

Item	Part No.	Description	Qty	Un	From SN	To SN	Order PN	Page
1	85429959	NUT M5	4	UN			85429959	
2	85429926	SCREW H M12x25	2	UN			85429926	
3	85430452	PIPE UNION REDUCER MAL/FEM 3/8G D6	6	UN			85430452	
4	85430460	PIPE UNION MAL/MAL D6	6	UN			85430460	
5	85430478	PIPE UNION ELBOW MAL/MAL D6	4	UN			85430478	
6	85430486	PIPE UNION FEM/FEM D6	2	UN			85430486	
7	85625002	PLUG D06	2	UN			85625002	
8	85621266	SPRING CLAMP D8.9/9.3	10	UN			85621266	
9	85430494	FLEXIBLE HOSE D6x12	4.5	ML			85430494	
10	85632206	SCREW H M5x45	4	UN			85632206	
11	85429967	WASHER 5x12	8	UN			85429967	
12	85430171	WASHER 12X27	2	UN			85430171	

FUEL PREFILTER KIT

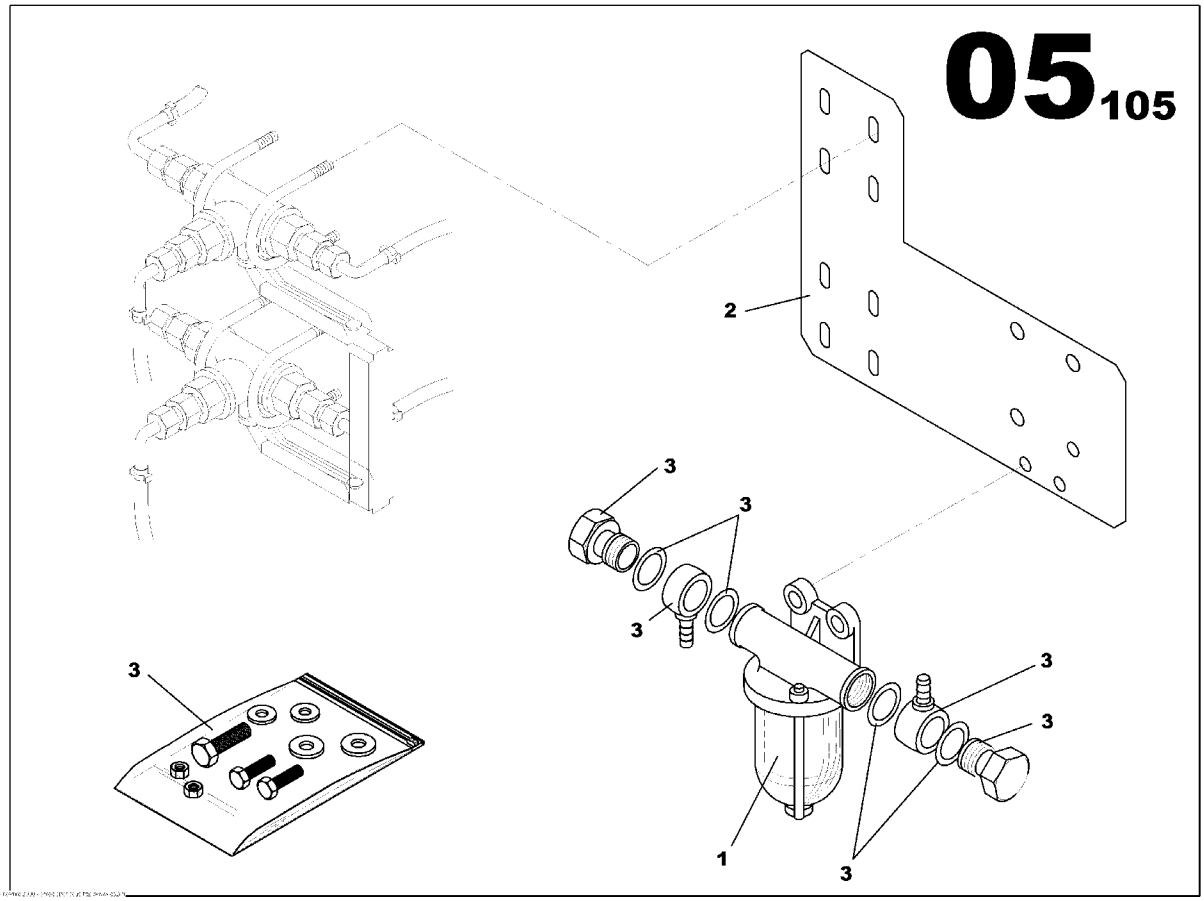

FUEL PREFILTER KIT
85507762

Part numbers listed are only parts used in this model

Item	Part No.	Description	Qty	Un	From SN	To SN	Order PN	Page
1	85403525	FUEL FILTER SEPARATOR	1	UN			85403525	
2	85425361	FUEL FILTER SEPARATOR/3 WAY FUEL VALVE BRACKET	1	UN			85425361	
3	85491033	SCREWS ASSEMBLY	1	UN			85491033	143

SCREWS ASSEMBLY

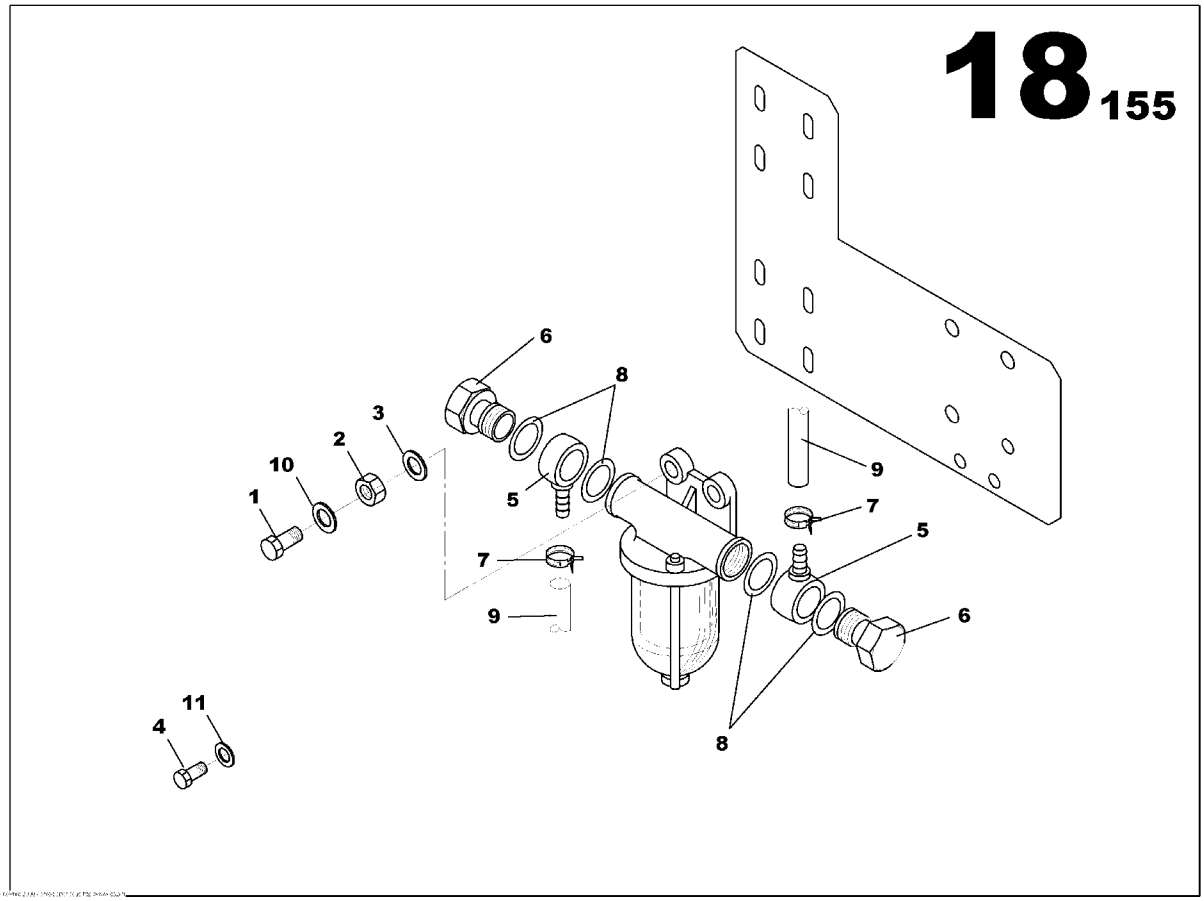

SCREWS ASSEMBLY
85491033

Part numbers listed are only parts used in this model

Item	Part No.	Description	Qty	Un	From SN	To SN	Order PN	Page
1	85429538	SCREW H M6x20	2	UN			85429538	
2	85507911	NUT M6	2	UN			85507911	
3	85507929	WASHER M6	2	UN			85507929	
4	85429926	SCREW H M12x25	4	UN			85429926	
5	85415727	BANJO CONNECTOR MALE D06	2	UN			85415727	
6	85409282	BANJO SCREW M14X150 L26	2	UN			85409282	
7	85621266	SPRING CLAMP D8.9/9.3	4	UN			85621266	
8	85409522	GASKET D14x20	4	UN			85409522	
9	85430494	FLEXIBLE HOSE D6x12	1.3	ML			85430494	
10	85429793	WASHER 6x14	2	UN			85429793	
11	85430171	WASHER 12X27	4	UN			85430171	

Index

Part number	Order number	Page
85496495	85496495	8
		6
85496552	85496552	32
85416162	85416162	42
85415404	85415404	42
85415412	85415412	42
85415214	85415214	38
85414837	85414837	36
85403426	85403426	134
85403434	85403434	134
54602800	54602800	2
85416147	85416147	48
85403517	85403517	50
85629541	85629541	48
85403525	85403525	142
85425361	85425361	142
85507762	85507762	2
85633295	85633295	138
17130121	17130121	48
17130139	17130139	2
17130154	17130154	48
85633386	85633386	78
17130170	17130170	46
		44
17130196	17130196	48
85403699	85403699	62
85403707	85403707	62
85403715	85403715	62
85412948	85412948	108
85413268	85413268	108

Part number	Order number	Page
85412872	85412872	108
85403723	85403723	62
85633410	85633410	62
17130238	17130238	60
		58
85416386	85416386	12
85413581	85413581	12
85414613	85414613	6
85413433	85413433	12
85412823	85412823	12
85412880	85412880	12
85425379	85425379	12
85414530	85414530	64
85414563	85414563	66
85413805	85413805	68
85413854	85413854	78
85496925	85496925	68
85633832	85633832	68
85417459	85417459	54
85496982	85496982	6
17130279	17130279	48
17130287	17130287	48
17130295	17130295	56
85416055	85416055	74
85416063	85416063	74
85415628	85415628	42
85415636	85415636	42
85415644	85415644	42
17130303	17130303	74
17130329	17130329	72

Part number	Order number	Page
		70
85400018	85400018	38
85400026	85400026	38
85415495	85415495	74
85627487	85627487	38
17130378	17130378	74
17130386	17130386	74
85492700	85492700	88
17130394	17130394	74
85415354	85415354	88
85415362	85415362	88
85415347	85415347	88
85415370	85415370	88
85412484	85412484	88
85412492	85412492	88
85413516	85413516	88
85497410	85497410	88
85497428	85497428	88
85497436	85497436	88
85415313	85415313	88
85509594	85509594	88
85634194	85634194	86
85634202	85634202	84
85509560	85509560	88
85509578	85509578	88
85509586	85509586	88
85632982	85632982	66
85633048	85633048	88
85633055	85633055	88
85633063	85633063	88

Index

Part number	Order number	Page
85634319	85634319	88
85406130	85406130	126
85406130	85406130	88
85406189	85406189	126
85509305	85509305	88
85416477	85416477	88
85416501	85416501	88
85412831	85412831	88
85402907	85402907	126
85402907	85402907	88
85406221	85406221	92
85406221	85406221	128
85406239	85406239	92
85406239	85406239	128
85406247	85406247	92
85406247	85406247	128
85632883	85632883	94
85632883	85632883	130
85509263	85509263	78
85621142	85621142	88
85509859	85509859	88
85509842	85509842	90
85412625	85412625	62
85634376	85634376	62
85634384	85634384	62
85505543	85505543	104
85416030	85416030	124
85415982	85415982	124
85412534	85412534	124
85415933	85415933	124

Part number	Order number	Page
85416121	85416121	104
85415941	85415941	22
85407047	85407047	22
85501435	85501435	30
85491991	85491991	84
85416238	85416238	104
85413136	85413136	104
85413144	85413144	106
85413144	85413144	104
85415180	85415180	102
85407294	85407294	96
17130428	17130428	54
85498822	85498822	70
85415537	85415537	126
85498921	85498921	122
85414860	85414860	124
85407682	85407682	126
85407690	85407690	124
85407708	85407708	124
85505550	85505550	104
85498947	85498947	114
85416048	85416048	124
85415545	85415545	124
85498954	85498954	114
85498988	85498988	116
85499051	85499051	76
85499069	85499069	76
85499127	85499127	120
85499135	85499135	120
85499143	85499143	120

Part number	Order number	Page
85499150	85499150	122
85499184	85499184	122
85499275	85499275	76
85634772	85634772	28
17130436	17130436	102
85634939	85634939	90
85621191	85621191	90
85426674	85426674	76
85635233	85635233	18
85499283	85499283	116
85499291	85499291	116
85499291	85499291	116
85505584	85505584	104
85635266	85635266	22
85416279	85416279	22
85499440	85499440	104
85499440	85499440	122
85499440	85499440	116
85626943	85626943	20
85635688	85635688	22
85408284	85408284	116
85416519	85416519	108
85490472	85490472	108
85413482	85413482	108
85502235	85502235	62
85413490	85413490	108
85408417	85408417	102
85413185	85413185	102
85413193	85413193	102
85402527	85402527	108

Index

Part number	Order number	Page
85408664	85408664	104
85408672	85408672	118
85408680	85408680	104
85408680	85408680	122
85408680	85408680	118
85408714	85408714	116
85412609	85412609	108
85426229	85426229	102
85499606	85499606	116
85402477	85402477	108
85415388	85415388	104
85408854	85408854	108
85414191	85414191	22
85412955	85412955	108
85505618	85505618	102
85408888	85408888	22
85408896	85408896	22
85413292	85413292	22
85408912	85408912	22
85412971	85412971	108
85402576	85402576	108
85412930	85412930	108
85415503	85415503	108
85416527	85416527	108
85413250	85413250	102
85501575	85501575	104
85501575	85501575	122
85501575	85501575	30
85499689	85499689	122
85499689	85499689	118

Part number	Order number	Page
85500494	85500494	116
85500502	85500502	116
85499697	85499697	116
85415792	85415792	24
17130600	17130600	116
85408946	85408946	116
85408995	85408995	116
85508638	85508638	108
85426583	85426583	116
85499721	85499721	116
85426435	85426435	34
85426658	85426658	116
85426666	85426666	116
85426641	85426641	116
85635860	85635860	26
85635878	85635878	22
85505659	85505659	112
17130634	17130634	116
17130642	17130642	116
17130659	17130659	116
17130667	17130667	116
17130675	17130675	116
85631422	85631422	110
85632362	85632362	110
85632370	85632370	108
85414985	85414985	102
85499812	85499812	102
85499838	85499838	100
85413474	85413474	134
85409084	85409084	124

Part number	Order number	Page
85429538	85429538	144
85409209	85409209	136
85429959	85429959	140
85507911	85507911	144
85429769	85429769	136
85429850	85429850	136
85507929	85507929	144
85429926	85429926	144
85429926	85429926	140
85429926	85429926	136
85409217	85409217	124
85409225	85409225	132
85409233	85409233	132
85409241	85409241	132
85429702	85429702	134
85491033	85491033	142
17130774	17130774	138
85509222	85509222	50
85415701	85415701	16
85430452	85430452	140
85415719	85415719	16
85415727	85415727	144
85415735	85415735	40
85416485	85416485	40
85409282	85409282	144
85409282	85409282	136
85430460	85430460	140
85430478	85430478	140
85409308	85409308	136
85430486	85430486	140

Index

Part number	Order number	Page
85625002	85625002	140
85490787	85490787	68
85429421	85429421	68
85412914	85412914	16
85500544	85500544	14
85412922	85412922	12
85409399	85409399	12
85417772	85417772	54
17130816	17130816	52
17130816	17130816	116
85621266	85621266	144
85621266	85621266	140
17130824	17130824	52
17130824	17130824	40
85490811	85490811	56
85413748	85413748	40
85409522	85409522	144
85409522	85409522	136
85413722	85413722	90
85416469	85416469	40
85416451	85416451	16
85631802	85631802	138
85430494	85430494	144
85430494	85430494	140
85416436	85416436	52
85416436	85416436	40
85416444	85416444	16
85414688	85414688	6
85416428	85416428	16
85416428	85416428	16

Part number	Order number	Page
85416428	85416428	16
85429587	85429587	12
85505634	85505634	112
85413797	85413797	112
85499887	85499887	124
85499911	85499911	70
85500015	85500015	78
85500197	85500197	82
85500221	85500221	82
54605027	54605027	80
54568787	54568787	80
54604996	54604996	80
54627773	54627773	80
54605001	54605001	80
54568779	54568779	80
54625207	54625207	80
54568753	54568753	80
54568761	54568761	80
54605019	54605019	80
54640024	54640024	80
54640008	54640008	80
85502490	85502490	78
17130832	17130832	78
85636553	85636553	78
17130865	17130865	78
17130873	17130873	116
85430007	85430007	136
85632016	85632016	90
85426252	85426252	10
85400091	85400091	10

Part number	Order number	Page
85621555	85621555	10
		10
85400182	85400182	10
85400208	85400208	10
85400216	85400216	10
85400240	85400240	10
85400299	85400299	10
85401321	85401321	10
85425569	85425569	10
85400349	85400349	10
85491546	85491546	10
85426054	85426054	10
85508182	85508182	10
85621522	85621522	10
85402451	85402451	34
85425858	85425858	34
85425866	85425866	34
85425882	85425882	34
85425965	85425965	34
85508745	85508745	34
85508851	85508851	34
85508893	85508893	34
85508943	85508943	34
85508992	85508992	34
85509032	85509032	34
85509073	85509073	34
85400646	85400646	14
85400695	85400695	14
85501252	85501252	14
85501278	85501278	14

Index

Part number	Order number	Page
85402519	85402519	108
85505592	85505592	104
85505691	85505691	108
85505683	85505683	108
85505675	85505675	102
85505642	85505642	102
85505568	85505568	104
85500346	85500346	116
17131129	17131129	122
85500379	85500379	108
85413508	85413508	108
85415396	85415396	104
85492114	85492114	116
85636702	85636702	26
85632206	85632206	140
85410140	85410140	124
85429967	85429967	140
85429793	85429793	144
85430171	85430171	144
85430171	85430171	140
85430171	85430171	136

Part number	Order number	Page	Part number	Order number	Page