INGERSOLL-RAND

G 25

PARTS MANUAL

17131228

Doosan purchased Bobcat Company from Ingersoll-Rand Company in 2007. Any reference to Ingersoll-Rand Company or use of trademarks, service marks, logos, or other proprietary identifying marks belonging to Ingersoll-Rand Company in this manual is historical or nominative in nature, and is not meant to suggest a current affiliation between Ingersoll-Rand Company and Doosan Company or the products of either.

G 25 EDITION:02/04/2004

33519016601

Revised (01-13)

G025

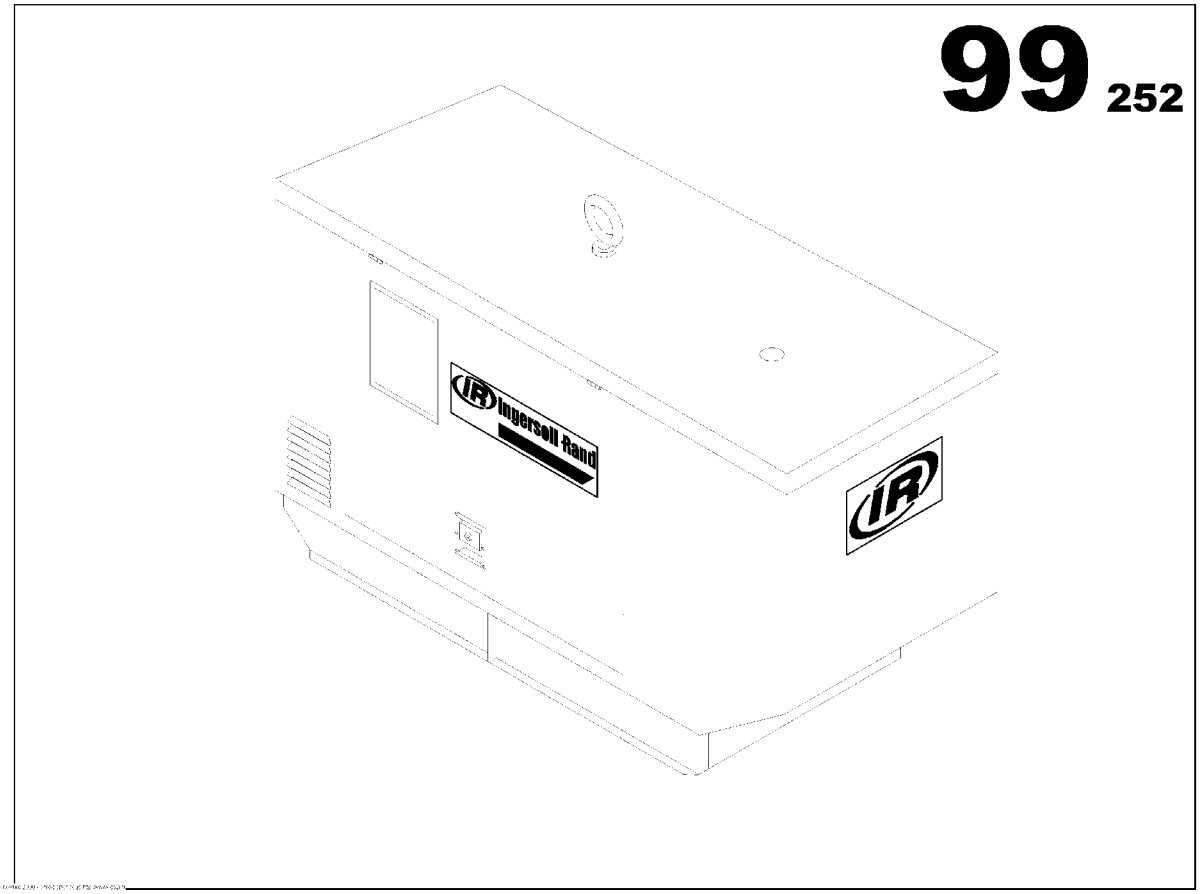

G025

Part numbers listed are only parts used in this model

Item	Part No.	Description	Qty	Un	From SN	To SN	Order PN	Page
1		G025 *-Basic Version*	1	U N				3
2	54602816	OIL SUMP DRAIN PUMP KIT	1	UN			54602816	131
3	17130147	3 WAY FUEL VALVE KIT	1	UN			17130147	135
4	85507770	FUEL PREFILTER KIT	1	UN			85507770	139

G025

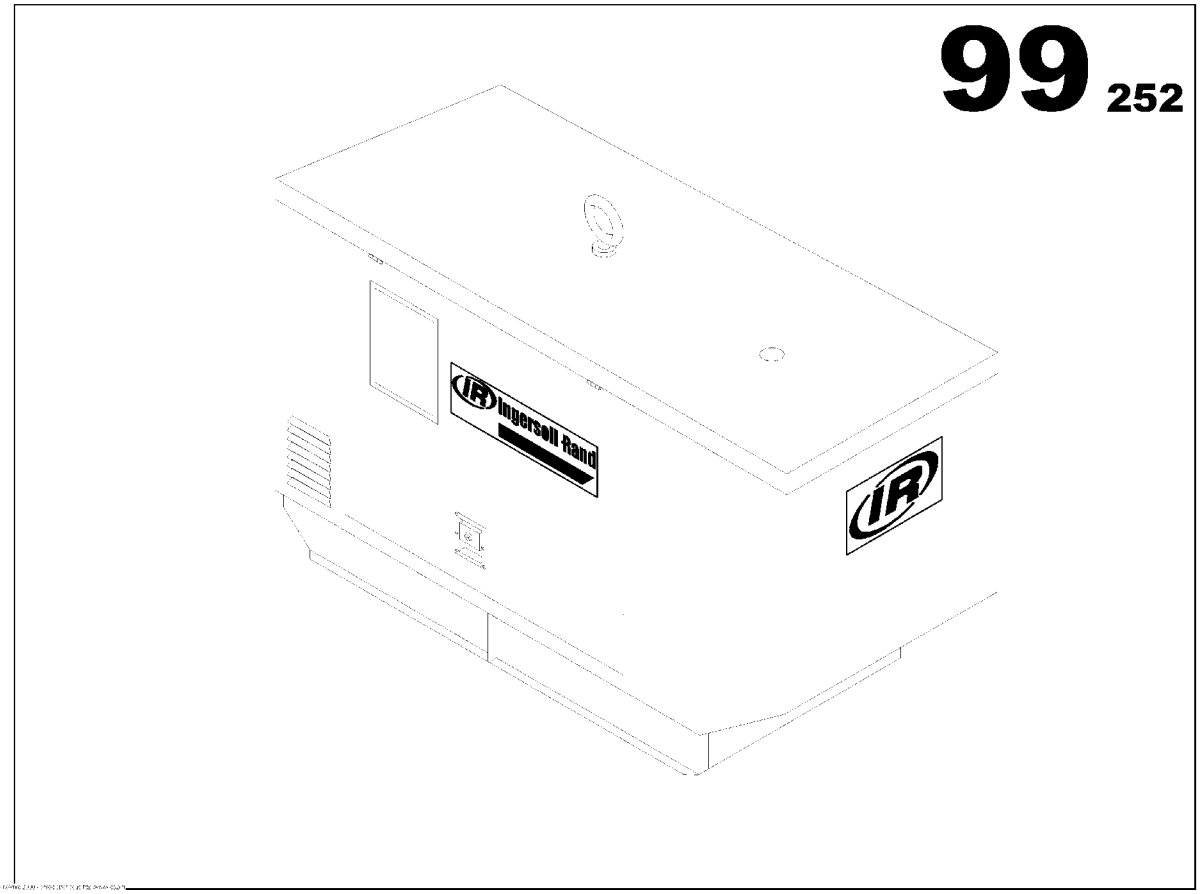

G025

Part numbers listed are only parts used in this model

Item	Part No.	Description	Qty	Un	From SN	To SN	Order PN	Page
1		ENGINE FUNCTION	1	UN				5
2		ALTERNATOR FUNCTION	1	UN				29
3		COOLER FUNCTION	1	UN				37
4		FUEL FUNCTION	1	UN				43
5		STARTING FUNCTION	1	UN				57
6		EXHAUST FUNCTION	1	UN				63
7		FRAME FUNCTION	1	UN				69
8		CANOPY FONCTION	1	UN				81
9		ELECTRICAL FUNCTION	1	UN				95
10		POWER CONNECTION BLOCK FUNCTION	1	UN				111

ENGINE FUNCTION

Non illustré
Not illustrated

ENGINE FUNCTION

Part numbers listed are only parts used in this model

Item	Part No.	Description	Qty	Un	From SN	To SN	Order PN	Page
1		ENGINE MITSUBISHI S4Q2 SAE 4/7.5	1	UN				7
2	85414597	AIR FILTER HEAVY DUTY ASSEMBLY	1	UN			85414597	13
3	85496990	WATER TEMPERATURE OIL PRESSURE SECURITY ASSEMBLY	1	UN			85496990	
4	85414696	SUMP DRAIN TAP ASSEMBLY	1	UN			85414696	17
5		ENGINE WIRING FUNCTION	1	UN				19

ENGINE MITSUBISHI S4Q2 SAE 4/7.5

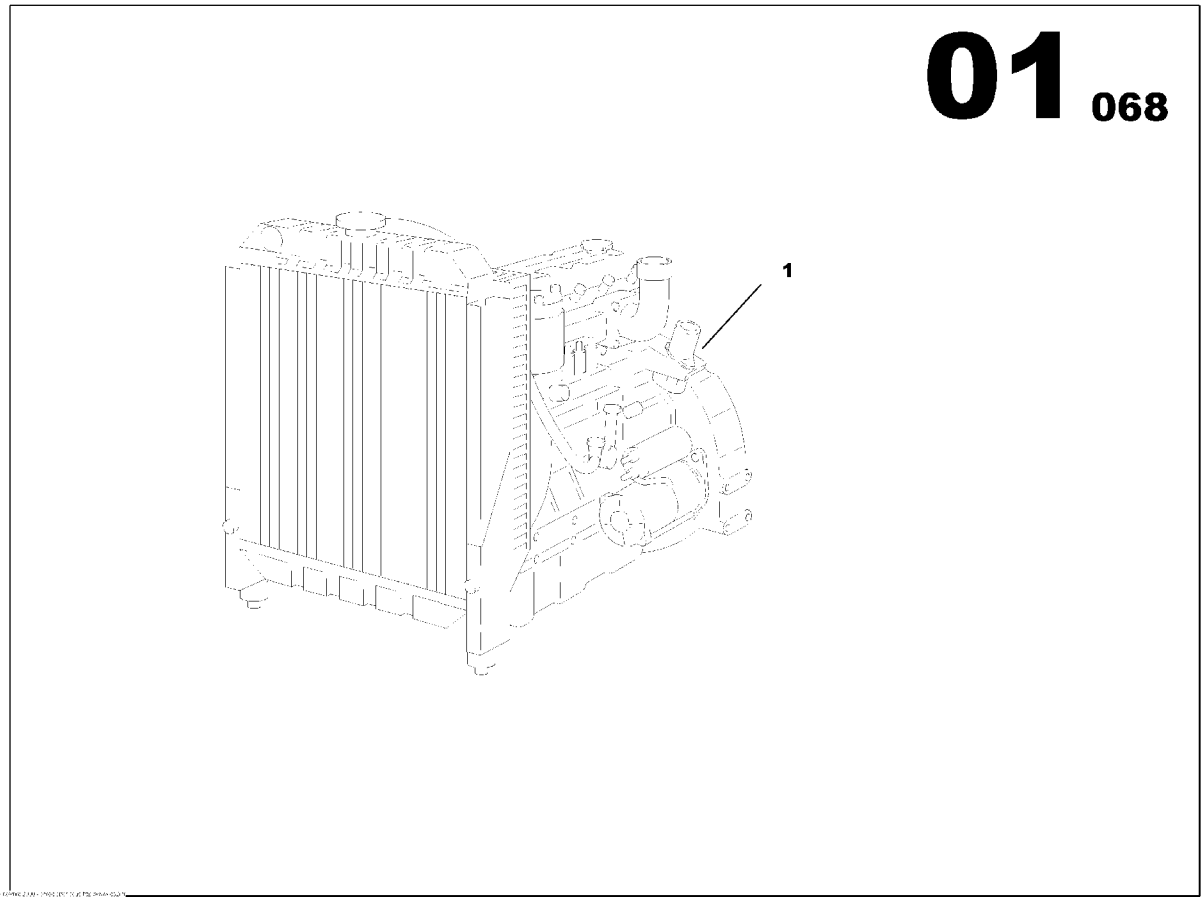

ENGINE MITSUBISHI S4Q2 SAE 4/7.5

Part numbers listed are only parts used in this model

Item	Part No.	Description	Qty	Un	From SN	To SN	Order PN	Page
	17130113	ENGINE MITSUBISHI S4Q2 SAE 4/7.5	1	UN			17130113	9
	85496511	ENGINE MITSUBISHI S4Q2 SAE 4/7.5	1	UN			85496511	11

ENGINE MITSUBISHI S4Q2 SAE 4/7.5

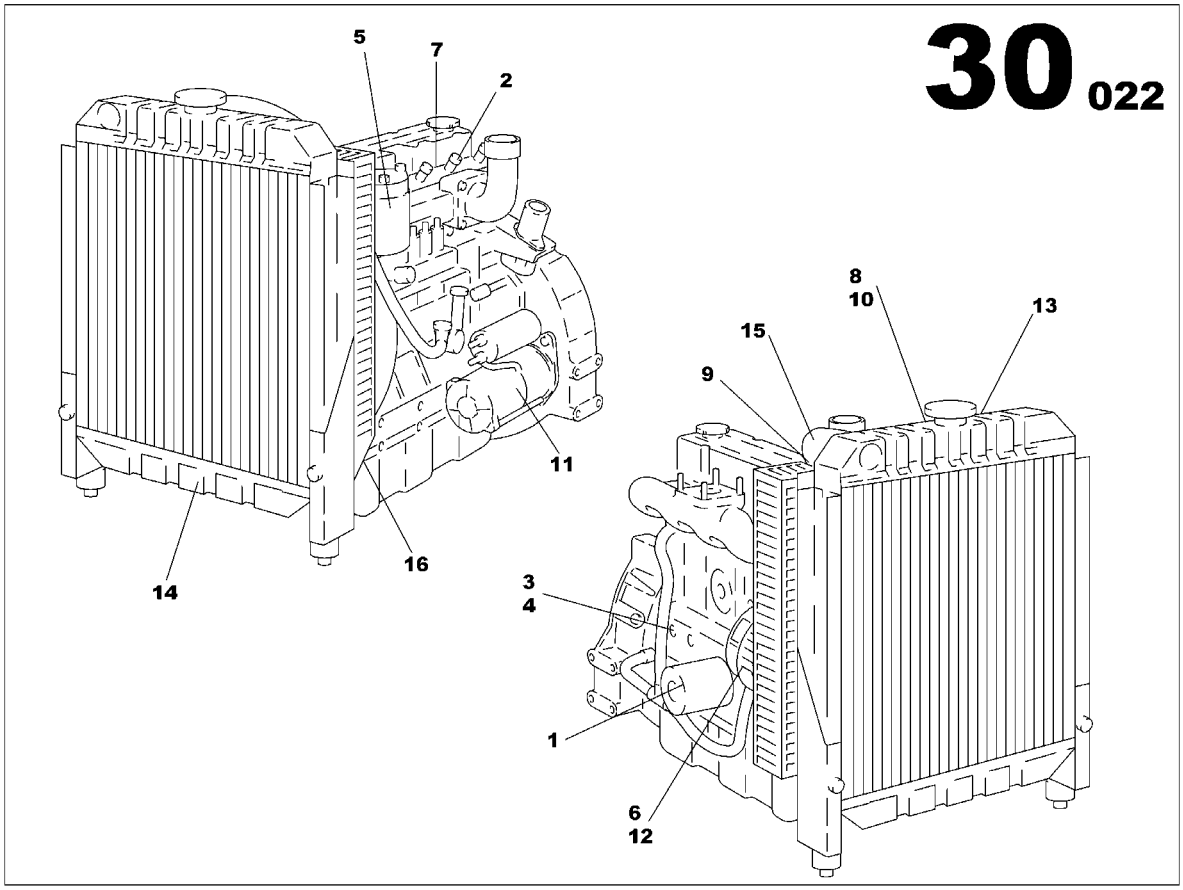

ENGINE MITSUBISHI S4Q2 SAE 4/7.5
17130113

Part numbers listed are only parts used in this model

Item	Part No.	Description	Qty	Un	From SN	To SN	Order PN	Page
1	85400133	OIL FILTER	1	UN			85400133	
2	85400216	INJECTOR	4	UN			85400216	
3	85508182	PRESSURE SWITCH *Engine serial Number 16321-->-*	1	UN			85508182	
4	85400240	PRESSURE SWITCH *Engine serial Number-->16320-*	1	UN			85400240	
5	85400257	FUEL FILTER	1	UN			85400257	
6	85400265	BELT	1	UN			85400265	
7	85400273	ROCKER COVER GASKET	1	UN			85400273	
8	85400281	THERMOSTAT	1	UN			85400281	
9	85400505	TEMPERATURE SWITCH	1	UN			85400505	
10	85400513	THERMOSTAT SEAL	1	UN			85400513	
11	85400570	STARTER	1	UN			85400570	
12	85621530	CHARGING ALTERNATOR	1	UN			85621530	
13	85400604	WATER PUMP	1	UN			85628022	
14	85400067	RADIATOR MI S4Q2	1	UN			85400067	
15	85400620	RADIATOR TOP HOSE	1	UN			85400620	
16	85400638	RADIATOR BOTTOM HOSE	1	UN			85400638	

ENGINE MITSUBISHI S4Q2 SAE 4/7.5

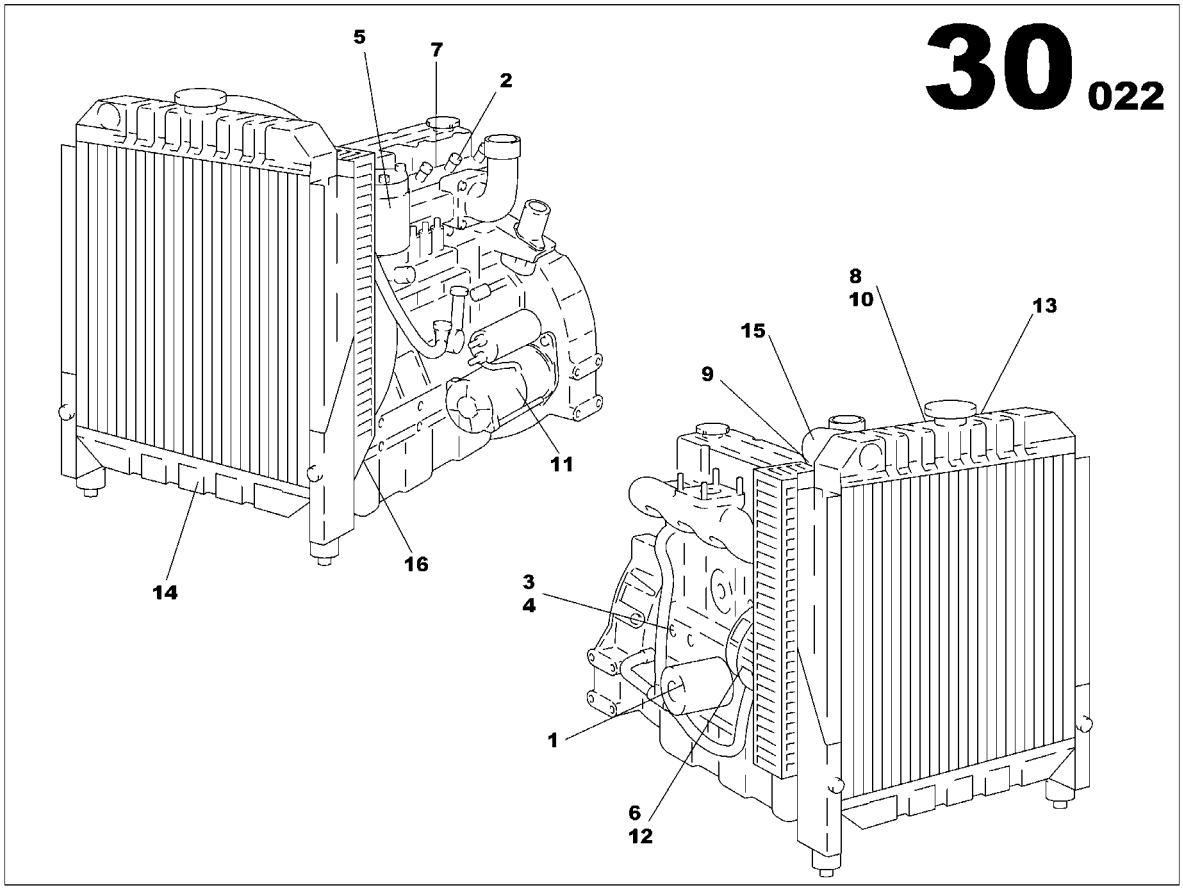

ENGINE MITSUBISHI S4Q2 SAE 4/7.5
85496511

Part numbers listed are only parts used in this model

Item	Part No.	Description	Qty	Un	From SN	To SN	Order PN	Page
1	85400133	OIL FILTER	1	UN			85400133	
2	85400216	INJECTOR	4	UN			85400216	
3	85508182	PRESSURE SWITCH *Engine serial Number 16321-->-*	1	UN			85508182	
4	85400240	PRESSURE SWITCH *Engine serial Number-->16320-*	1	UN			85400240	
5	85400257	FUEL FILTER	1	UN			85400257	
6	85400265	BELT	1	UN			85400265	
7	85400273	ROCKER COVER GASKET	1	UN			85400273	
8	85400281	THERMOSTAT	1	UN			85400281	
9	85400505	TEMPERATURE SWITCH	1	UN			85400505	
10	85400513	THERMOSTAT SEAL	1	UN			85400513	
11	85400570	STARTER	1	UN			85400570	
12	85621530	CHARGING ALTERNATOR	1	UN			85621530	
13	85400604	WATER PUMP	1	UN			85628022	
14	85400067	RADIATOR MI S4Q2	1	UN			85400067	
15	85400620	RADIATOR TOP HOSE	1	UN			85400620	
16	85400638	RADIATOR BOTTOM HOSE	1	UN			85400638	

AIR FILTER HEAVY DUTY ASSEMBLY

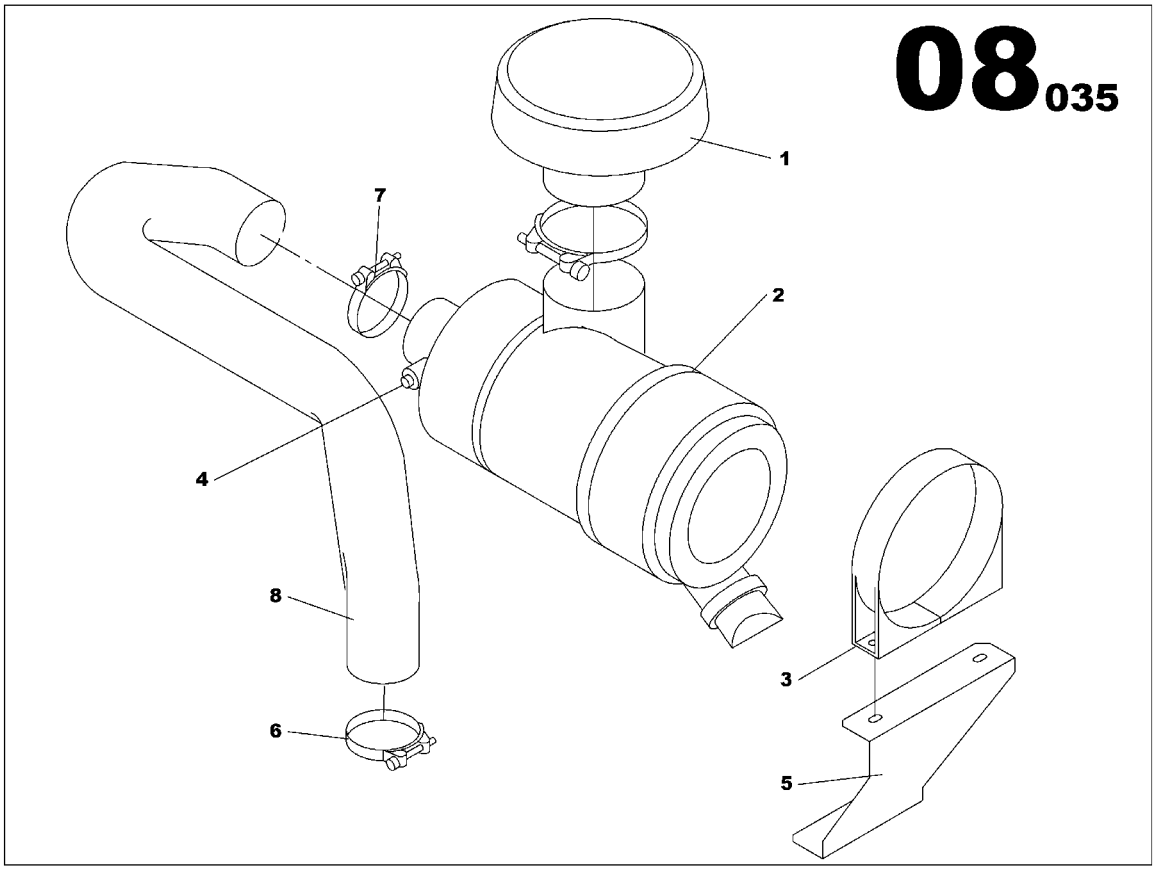

AIR FILTER HEAVY DUTY ASSEMBLY
85414597

Part numbers listed are only parts used in this model

Item	Part No.	Description	Qty	Un	From SN	To SN	Order PN	Page
1	85412815	RAIN CAP	1	UN			85412815	
2	85413441	AIR FILTER HEAVY DUTY	1	UN			85413441	15
3	85412898	CLAMP D102	1	UN			85412898	
4	85404119	AIR RESTRICTION INDICATOR	1	UN			85404119	
5	85425403	AIR FILTER BRACKET MI S4Q2/S4S	1	UN			85425403	
6	85412922	HOSE CLIP D50/70	1	UN			85412922	
7	85409407	HOSE CLIP D70/90	1	UN			85409407	
8	85425411	RUBBER HOSE ELBOW D58	1	UN			85425411	

AIR FILTER HEAVY DUTY

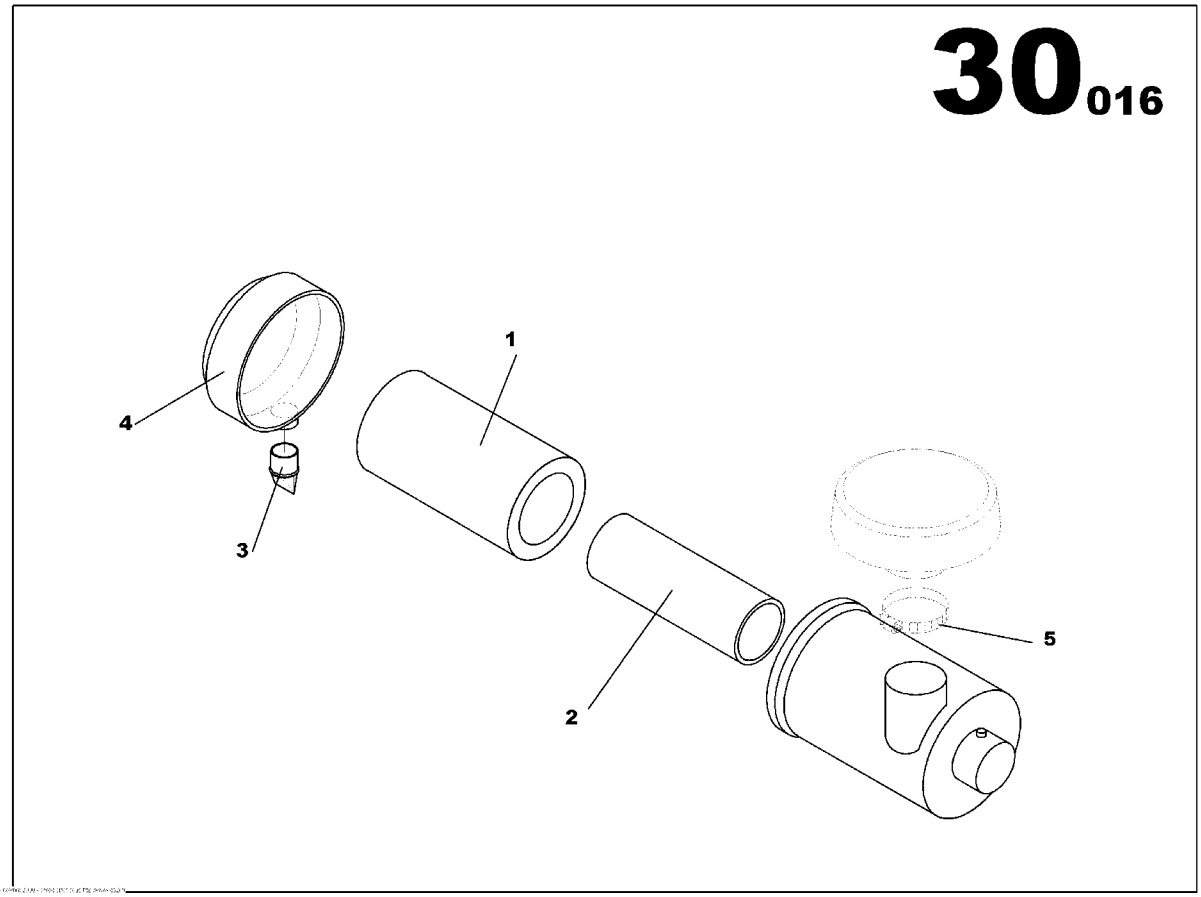

AIR FILTER HEAVY DUTY
85413441

Part numbers listed are only parts used in this model

Item	Part No.	Description	Qty	Un	From SN	To SN	Order PN	Page
1	85400679	AIR FILTER ELEMENT	1	UN			85400679	
2	85400703	AIR FILTER ELEMENT	1	UN			85400703	
3	85501252	VACUATOR VALVE	1	UN			85501252	
4	85501336	DUST CUP	1	UN			85501336	
5	85409399	HOSE CLIP D60/80	1	UN			85409399	

SUMP DRAIN TAP ASSEMBLY

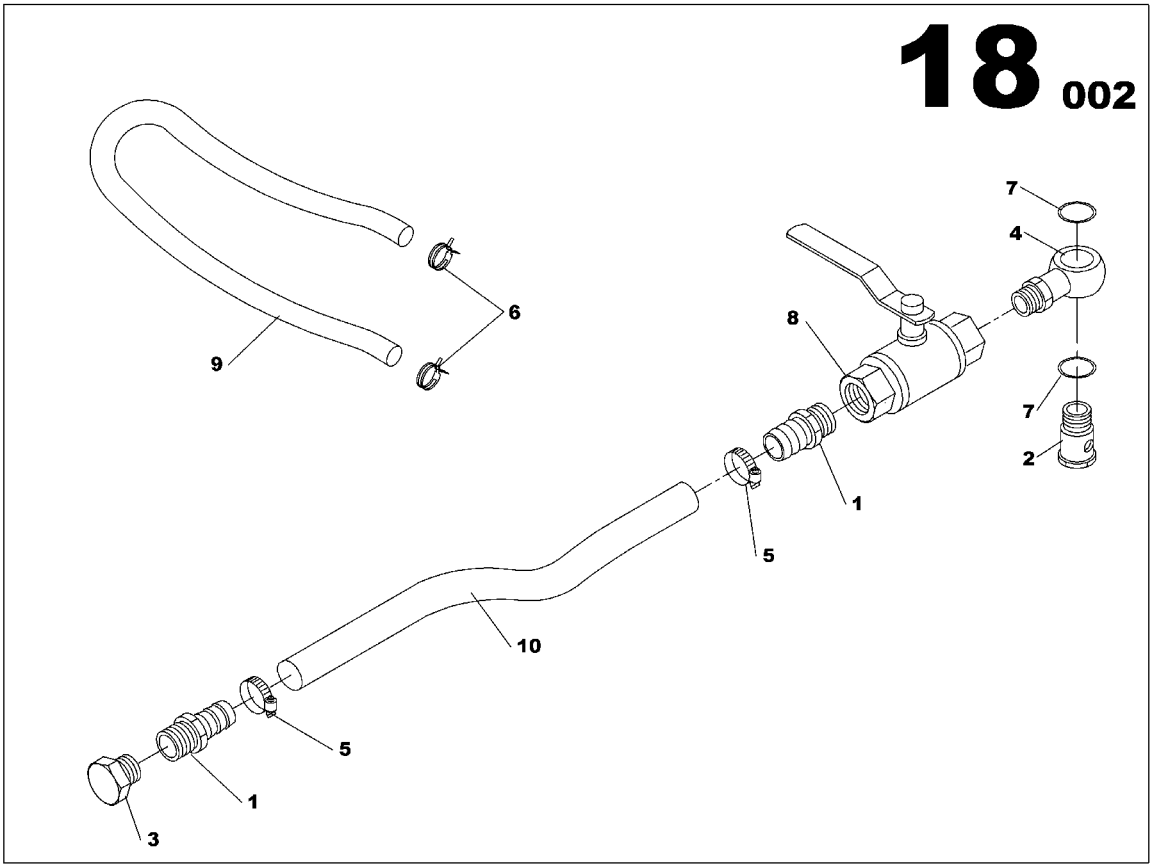

SUMP DRAIN TAP ASSEMBLY
85414696

Part numbers listed are only parts used in this model

Item	Part No.	Description	Qty	Un	From SN	To SN	Order PN	Page
1	85415719	PIPE UNION REDUCER MAL/MAL 3/8G D12	2	UN			85415719	
2	85409282	BANJO SCREW M14X150 L26	1	UN			85409282	
3	85412575	PLUG 3/8G	1	UN			85412575	
4	85415743	BANJO CONNECTOR MALE 3/8G	1	UN			85415743	
5	85412914	HOSE CLIP D12/22	2	UN			85412914	
6	85409514	SPRING CLAMP D13/15	2	UN			85409514	
7	85409522	GASKET D14x20	2	UN			85409522	
8	85416451	2 WAY VALVE	1	UN			85416451	
9	85416436	FLEXIBLE HOSE D8x14	0.7	ML			85416436	
10	85416444	FLEXIBLE HOSE D12x19	1.3	ML			85416444	

ENGINE WIRING FUNCTION

Non illustré
Not illustrated

ENGINE WIRING FUNCTION

Part numbers listed are only parts used in this model

Item	Part No.	Description	Qty	Un	From SN	To SN	Order PN	Page
1	85635282	ENGINE WIRING LOOM MI S4Q2	1	UN			85635282	21

ENGINE WIRING LOOM MI S4Q2

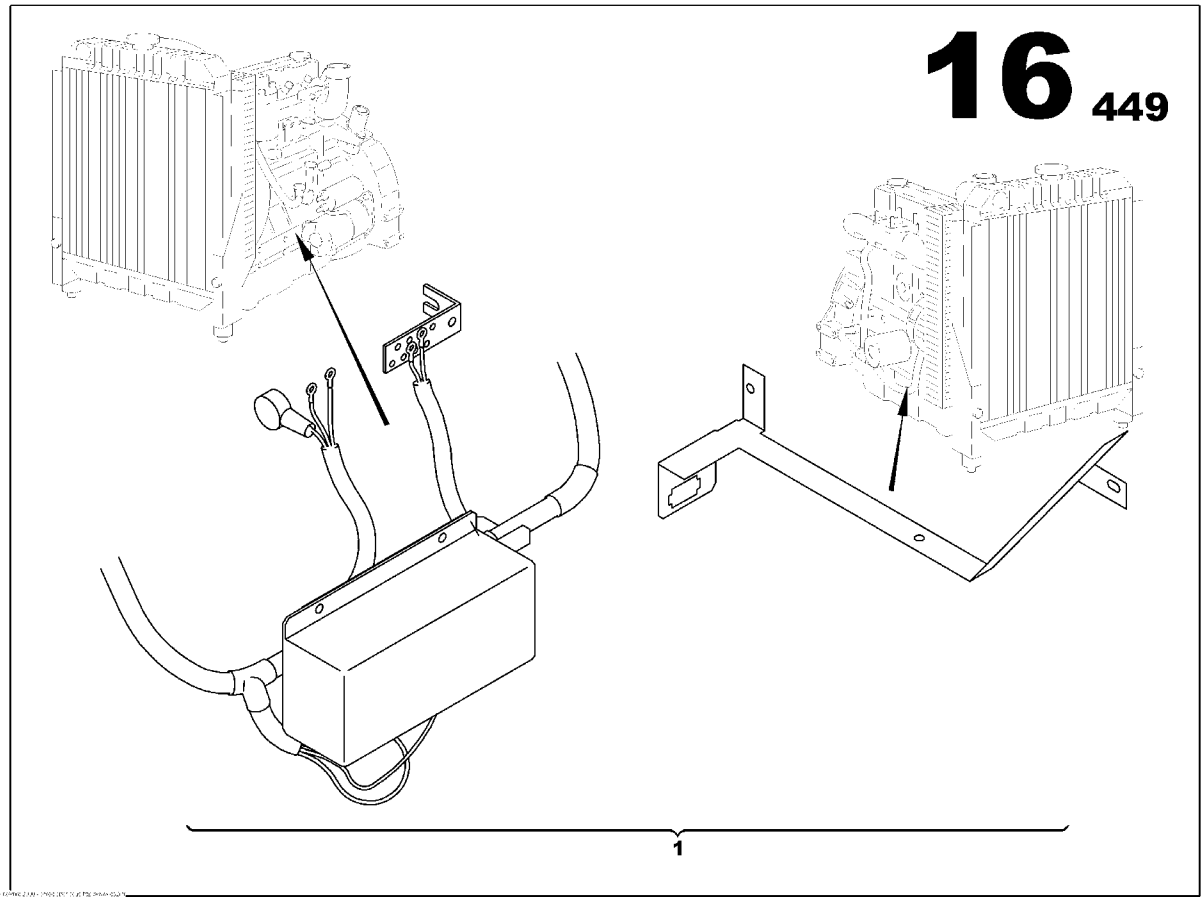

ENGINE WIRING LOOM MI S4Q2
85635282

Part numbers listed are only parts used in this model

Item	Part No.	Description	Qty	Un	From SN	To SN	Order PN	Page
1	85626950	ENGINE WIRING LOOM MI S4Q2	1	UN	02009426		85626950	23

ENGINE WIRING LOOM MI S4Q2

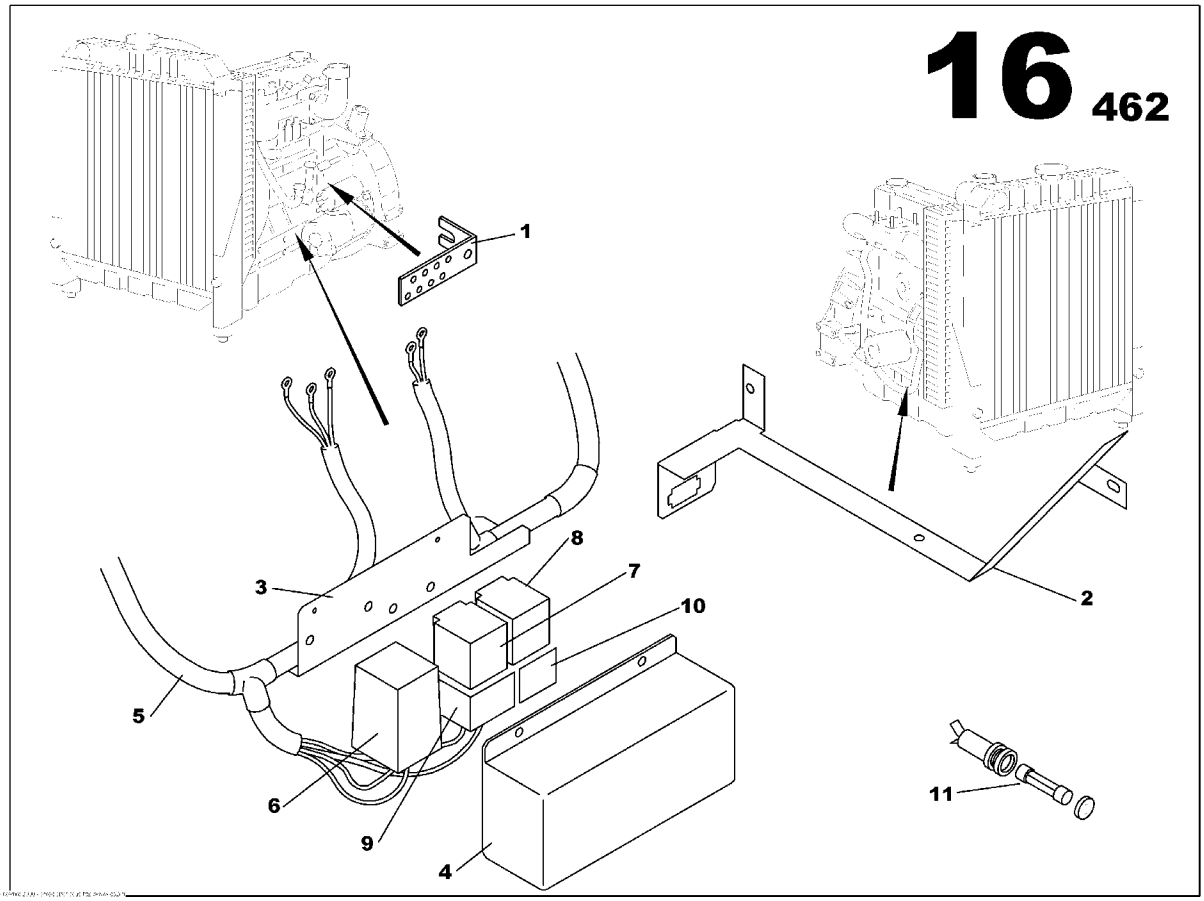

ENGINE WIRING LOOM MI S4Q2
85626950

Part numbers listed are only parts used in this model

Item	Part No.	Description	Qty	Un	From SN	To SN	Order PN	Page
1	85635266	COPPER BAR 5x25	1	UN			85635266	
2	85415966	WIRING BRACKET MI S4Q2	1	UN			85415966	
3	85415974	WIRING BRACKET MI S4Q2	1	UN			85415974	
4	85416279	STARTING RELAY PROTECTION PANEL	1	UN			85416279	
5	85635696	ENGINE WIRING LOOM MI S4Q2	1	UN			85635696	
6	85414209	MITSUBISHI RELAY CONNECTOR ASSEMBLY	1	UN			85414209	25
7	85408888	RELAY 12V 70A WITH BRAKET	1	UN			85408888	
8	85408896	RELAY 12V 20/30A	1	UN			85408896	
9	85413292	AUTOMOBILE RELAY BASE	1	UN			85413292	
10	85408912	AUTOMOBILE RELAY BASE	1	UN			85408912	
11	85635878	FUSE HOUSING ASSEMBLY	1	UN			85635878	27

MITSUBISHI RELAY CONNECTOR ASSEMBLY

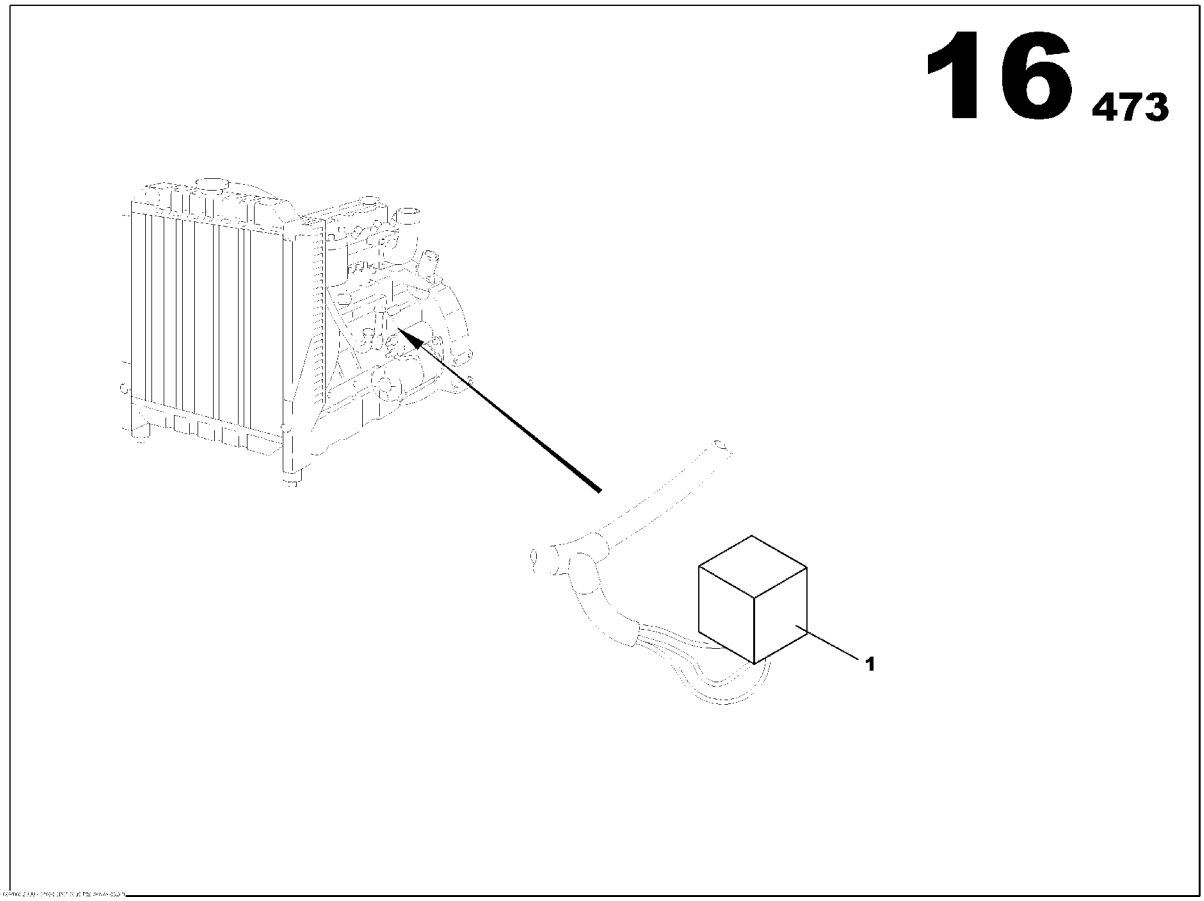

MITSUBISHI RELAY CONNECTOR ASSEMBLY
85414209

Part numbers listed are only parts used in this model

Item	Part No.	Description	Qty	Un	From SN	To SN	Order PN	Page
1	85415792	STARTING RELAY	1	UN			85415792	

FUSE HOUSING ASSEMBLY

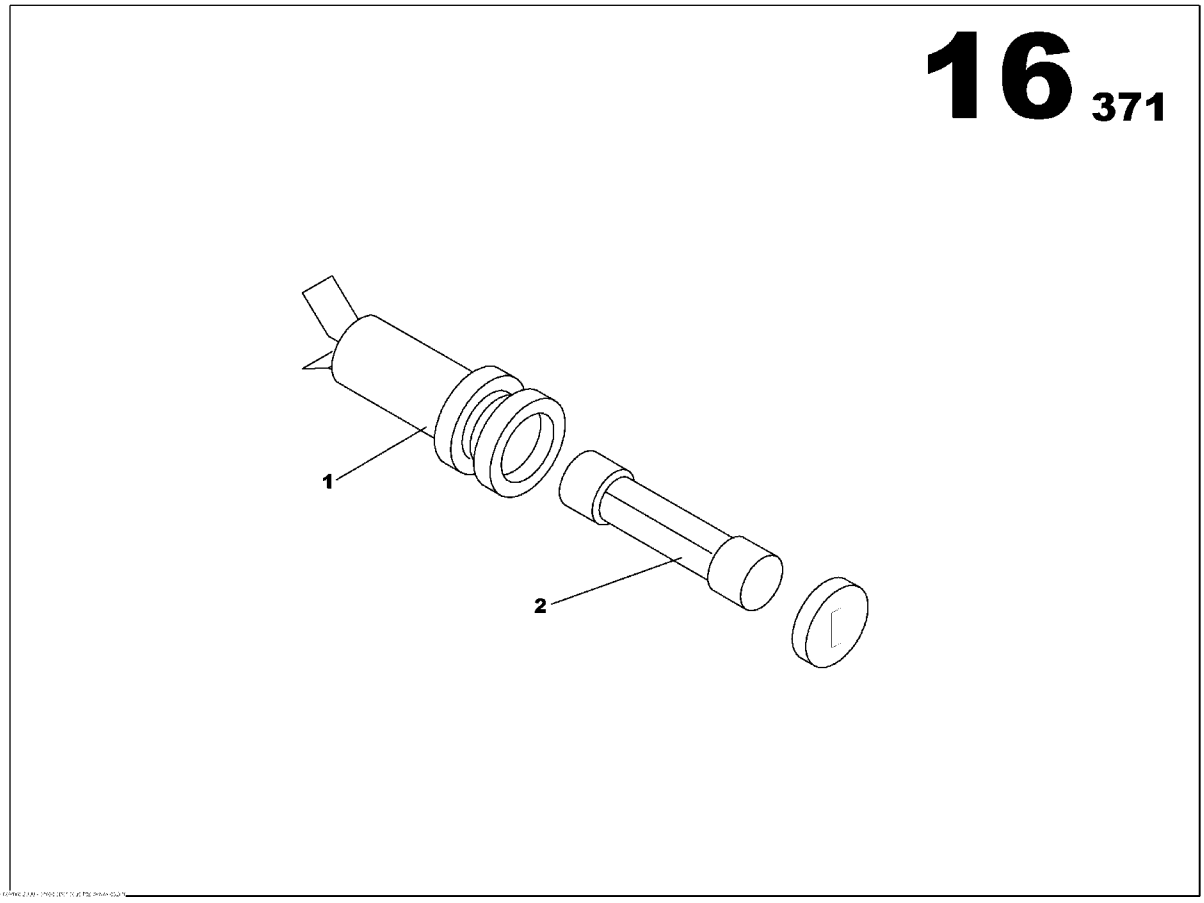

FUSE HOUSING ASSEMBLY
85635878

Part numbers listed are only parts used in this model

Item	Part No.	Description	Qty	Un	From SN	To SN	Order PN	Page
1	85635860	FUSE HOLDER 5x20	1	UN			85635860	
2	85636702	FUSE CYLINDRICAL 0.16A	1	UN			85636702	

ALTERNATOR FUNCTION

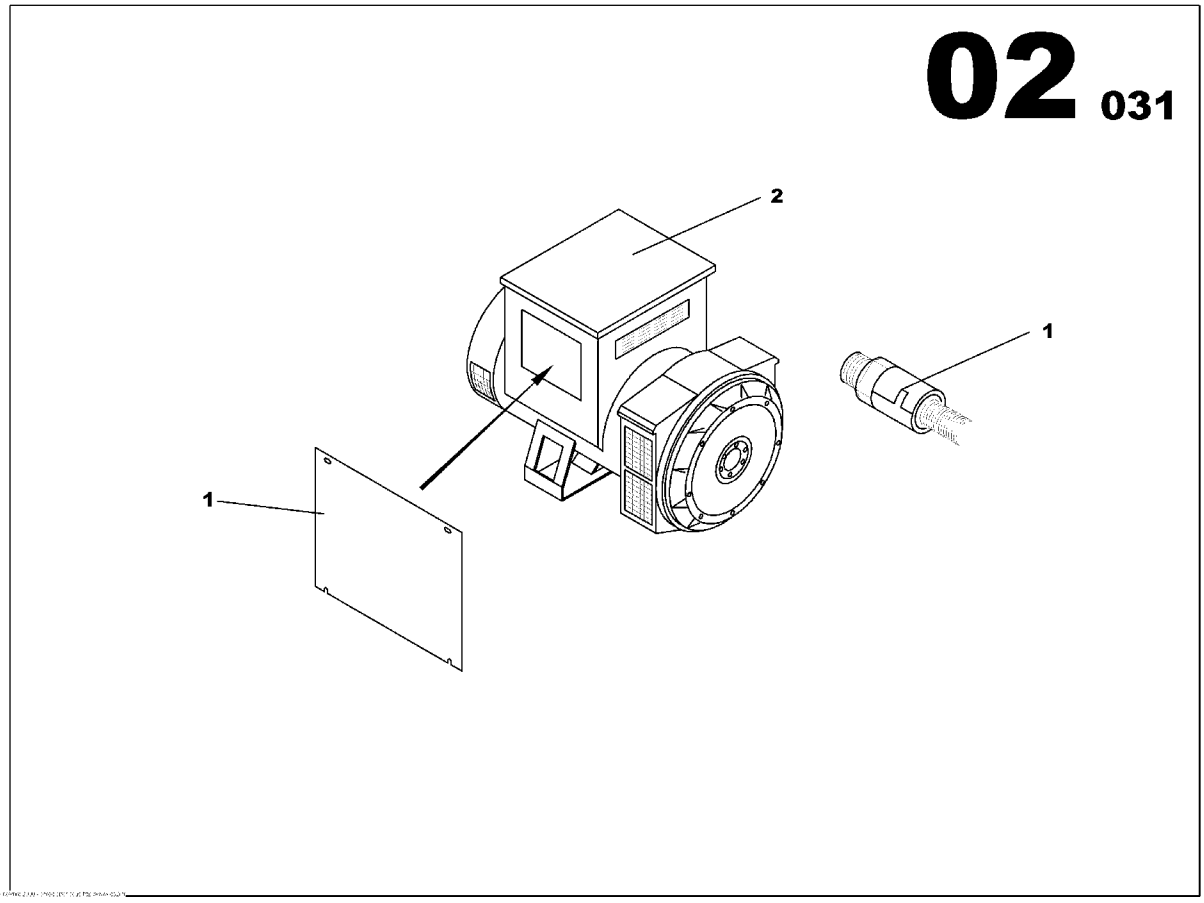

ALTERNATOR FUNCTION

Part numbers listed are only parts used in this model

Item	Part No.	Description	Qty	Un	From SN	To SN	Order PN	Page
1	85634772	OUTPUT CABLES ALTERNATOR ASSEMBLY	1	UN			85634772	31
2		ALTERNATOR	1	UN				33

OUTPUT CABLES ALTERNATOR ASSEMBLY

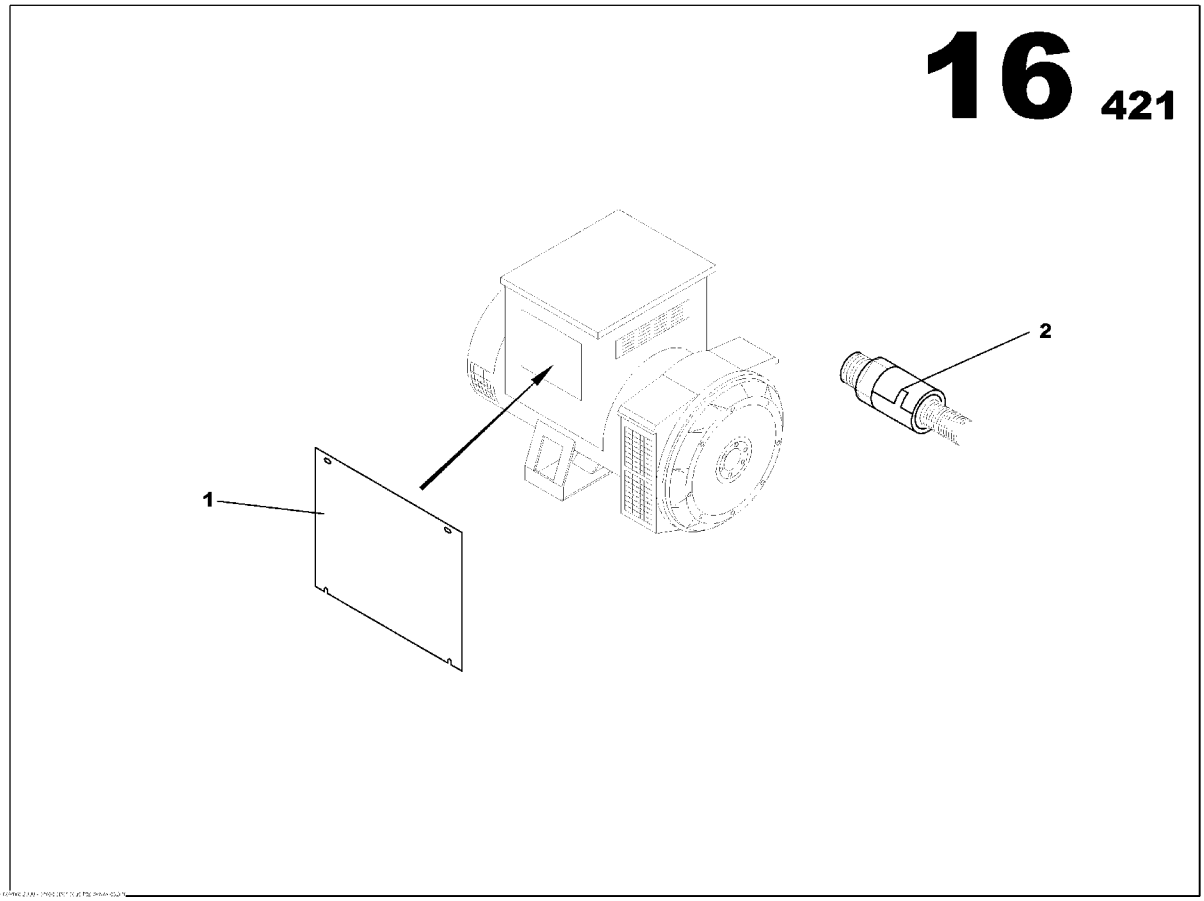

OUTPUT CABLES ALTERNATOR ASSEMBLY
85634772

Part numbers listed are only parts used in this model

Item	Part No.	Description	Qty	Un	From SN	To SN	Order PN	Page
1	85501435	CABLE OUTLET PLATE	1	UN			85501435	
2	85501575	PIPE UNION PG36	1	UN			85501575	

ALTERNATOR

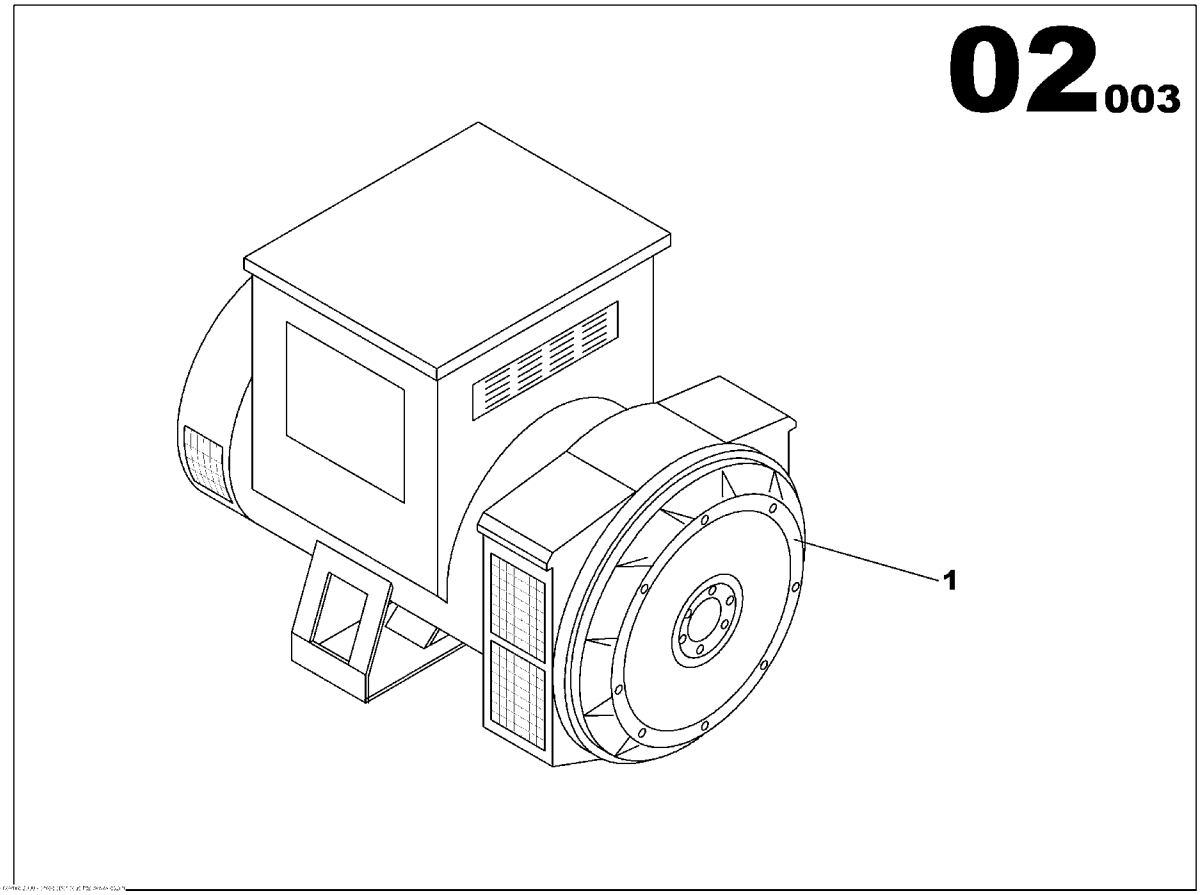

ALTERNATOR

Part numbers listed are only parts used in this model

Item	Part No.	Description	Qty	Un	From SN	To SN	Order PN	Page
1	85496537	ALTERNATOR LS 422S WITH SWITCH	1	UN			85496537	35

ALTERNATOR LS 422S WITH SWITCH

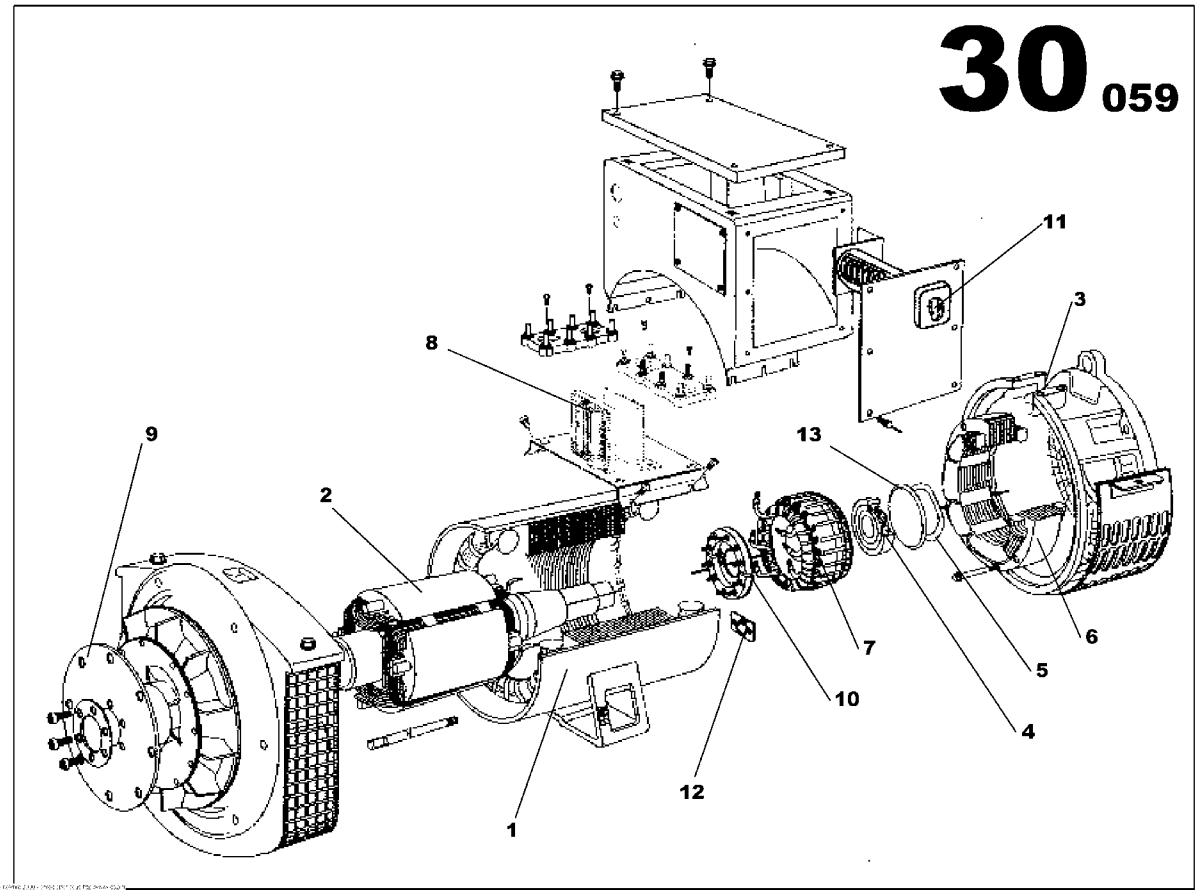

ALTERNATOR LS 422S WITH SWITCH
85496537

Part numbers listed are only parts used in this model

Item	Part No.	Description	Qty	Un	From SN	To SN	Order PN	Page
1	85508760	WOUND STATOR ASSEMBLY	1	UN			85508760	
2	85509073	WOUND ROTOR ASSEMBLY	1	UN			85509073	
3	85508851	N.D.E BRACKET	1	UN			85508851	
4	85425882	BEARING	1	UN			85425882	
5	85509032	WAVY WASHER	1	UN			85509032	
6	85508893	WOUND EXCITER FIELD	1	UN			85508893	
7	85508943	WOUND EXCITER ARMATURE	1	UN			85508943	
8	85402451	GOVERNOR	1	UN			85402451	
9	85425965	DRIVE DISC LSA 422S5	1	UN			85425965	
10	85425858	DIODE BRIDGE ASSEMBLY	1	UN			85425858	
11	85426450	VOLTAGE SELECTOR SWITCH	1	UN			85426450	
12	85425866	SURGE SUPPRESSOR	1	UN			85425866	
13	85508992	O RING	1	UN			85508992	

COOLER FUNCTION

Non illustré
Not illustrated

COOLER FUNCTION

Part numbers listed are only parts used in this model

Item	Part No.	Description	Qty	Un	From SN	To SN	Order PN	Page
1	85414852	RADIATOR MI S4Q2 ASSEMBLY	1	UN			85414852	39

RADIATOR MI S4Q2 ASSEMBLY

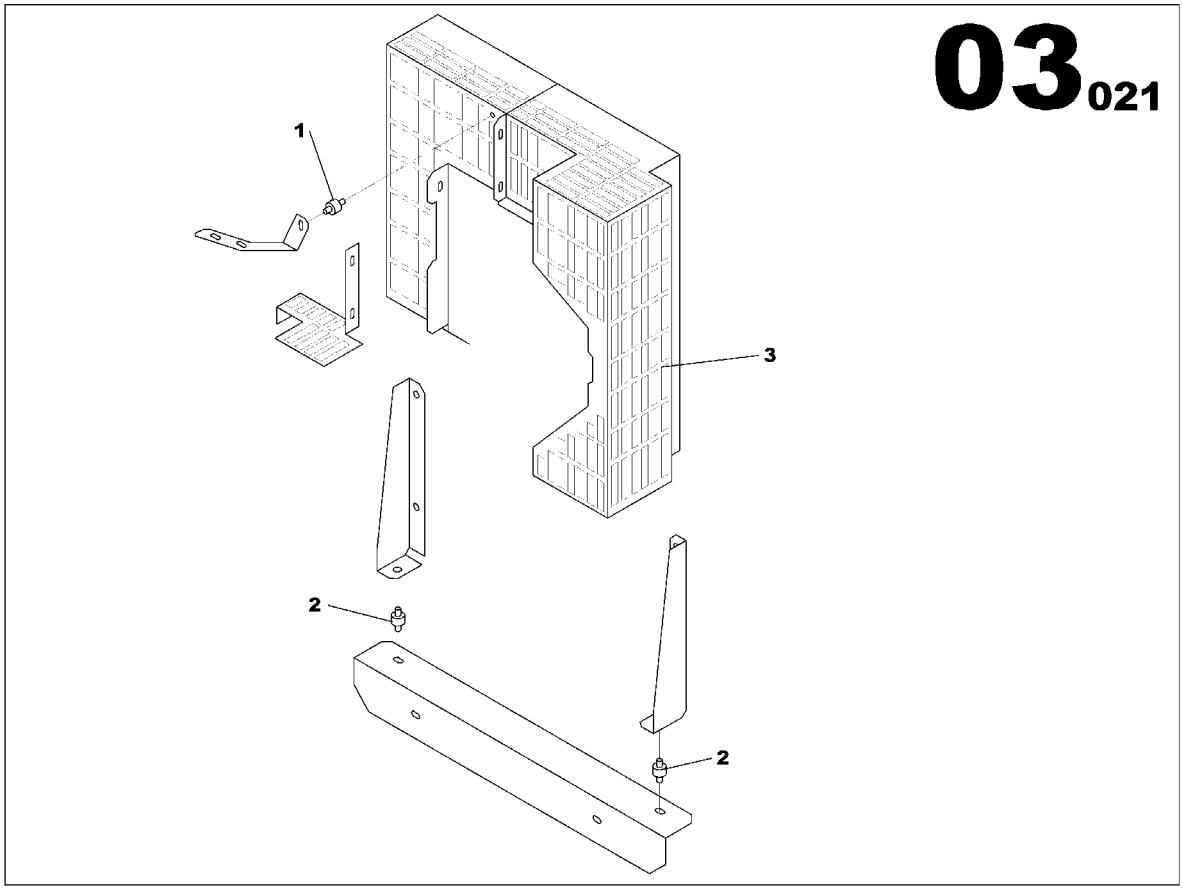

RADIATOR MI S4Q2 ASSEMBLY
85414852

Part numbers listed are only parts used in this model

Item	Part No.	Description	Qty	Un	From SN	To SN	Order PN	Page
1	85400018	ANTI-VIBRATION MOUNT D25 Th22	1	UN			85400018	
2	85400026	ANTI-VIBRATION MOUNT D40 Th28	2	UN			85400026	
3	85632859	FAN GUARD ASSEMBLY	1	UN			85632859	41

FAN GUARD ASSEMBLY

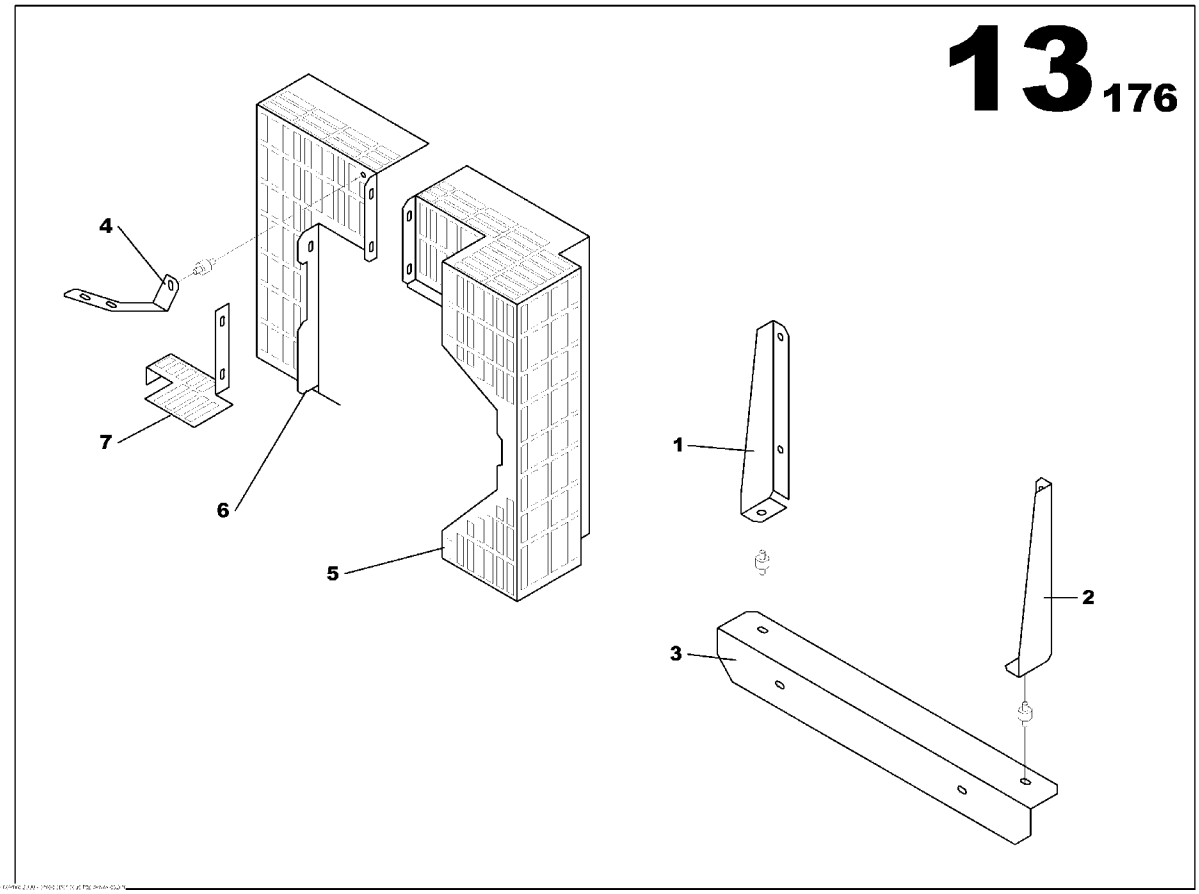

FAN GUARD ASSEMBLY
85632859

Part numbers listed are only parts used in this model

Item	Part No.	Description	Qty	Un	From SN	To SN	Order PN	Page
1	85416204	RADIATOR BRACKET MI S4Q2 RIGHT	1	UN			85416204	
2	85416212	RADIATOR BRACKET MI S4Q2 LEFT	1	UN			85416212	
3	85416220	RADIATOR BRACKET MI S4Q2 CENTRAL	1	UN			85416220	
4	85415438	RADIATOR BRACKET ENGINE MI S4Q2	1	UN			85415438	
5	85415677	RADIATOR GUARD MI S4Q2	1	UN			85415677	
6	85415685	RADIATOR GUARD MI S4Q2	1	UN			85415685	
7	85415693	RADIATOR GUARD MI S4Q2	1	UN			85415693	

FUEL FUNCTION

Non illustré
Not illustrated

FUEL FUNCTION

Part numbers listed are only parts used in this model

Item	Part No.	Description	Qty	Un	From SN	To SN	Order PN	Page
1		FUEL TANK M107 ASSEMBLY	1	UN				45

FUEL TANK M107 ASSEMBLY

Non illustré
Not illustrated

FUEL TANK M107 ASSEMBLY

Part numbers listed are only parts used in this model

Item	Part No.	Description	Qty	Un	From SN	To SN	Order PN	Page
	17130162	FUEL TANK M107 ASSEMBLY	1	UN			17130162	47
	17130196	COMBUSTIBLE VENT TANK ASSEMBLY	1	UN			17130196	55

FUEL TANK M107 ASSEMBLY

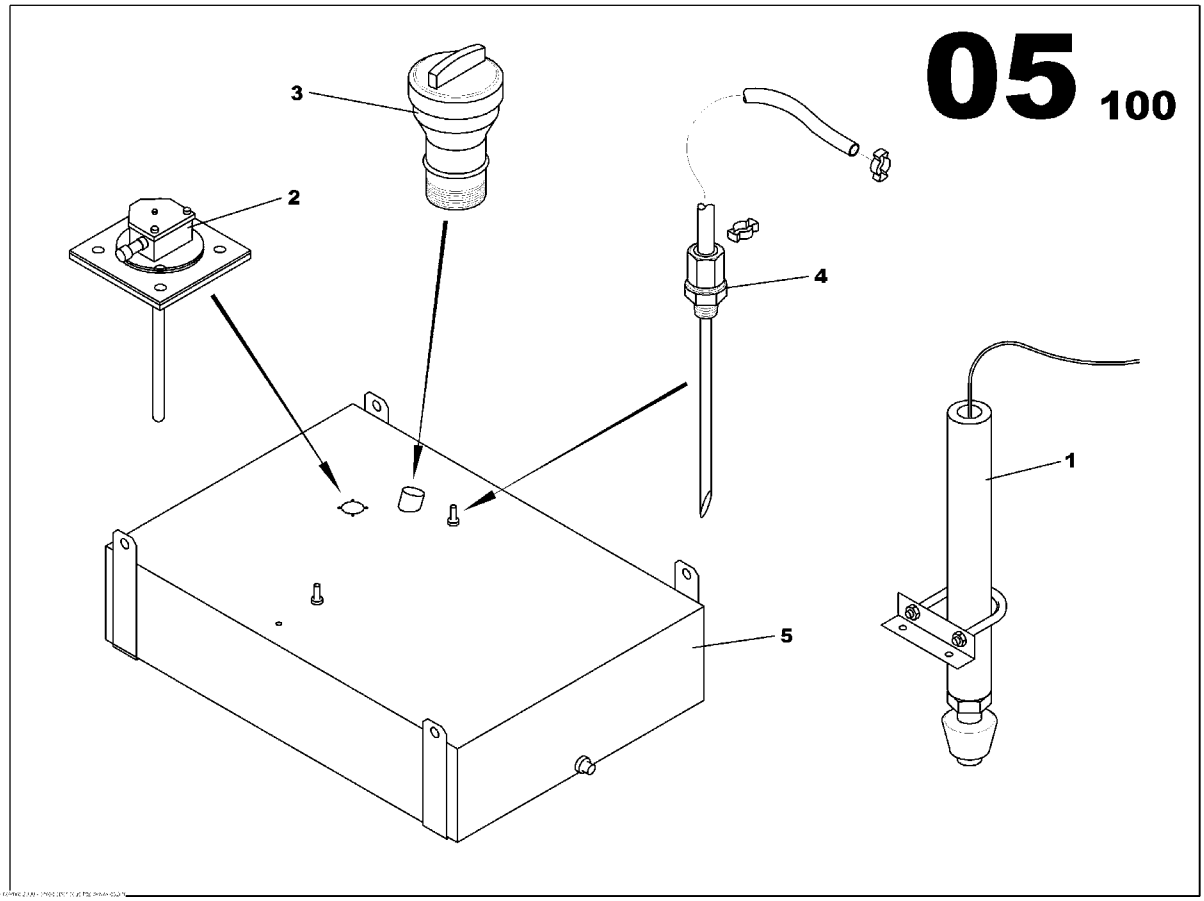

FUEL TANK M107 ASSEMBLY
17130162

Part numbers listed are only parts used in this model

Item	Part No.	Description	Qty	Un	From SN	To SN	Order PN	Page
1	17130279	LEAKAGE DETECTION RETENTION BUND ASSEMBLY	1	UN			17130279	51
2	17130287	TANK GAUGE ASSEMBLY	1	UN			17130287	53
3	85629541	FUEL FILLING FUNNEL BASE TANK	1	UN			85629541	49
4	17130121	FUEL SUCCION PIPE L320 D8	1	UN			17130121	
5	17130154	TANK 230L	1	UN			17130154	

FUEL FILLING FUNNEL BASE TANK

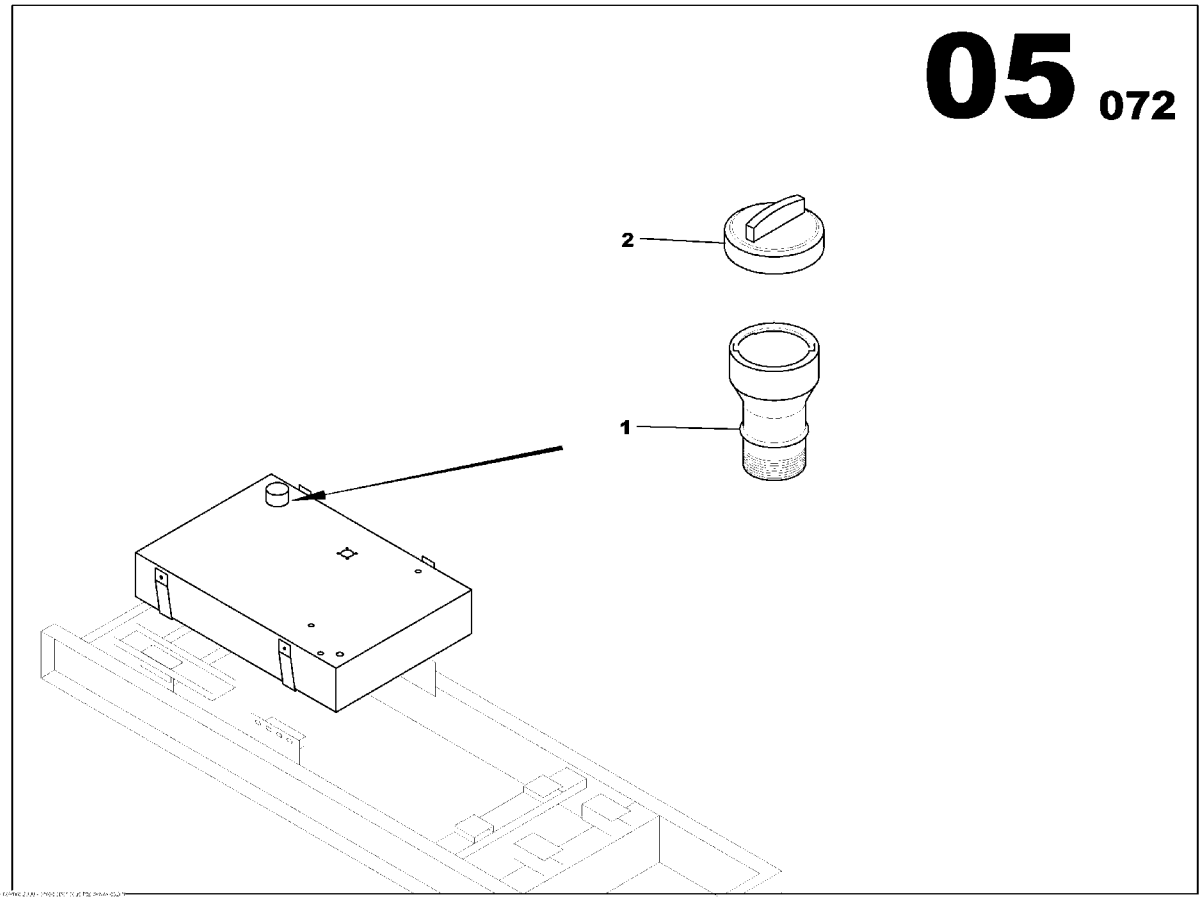

FUEL FILLING FUNNEL BASE TANK
85629541

Part numbers listed are only parts used in this model

Item	Part No.	Description	Qty	Un	From SN	To SN	Order PN	Page
1	85403517	FUEL FILLING FUNNEL BASE TANK	1	UN			85403517	
2	85509222	TANK CAP	1	UN			85509222	

LEAKAGE DETECTION RETENTION BUND ASSEMBLY

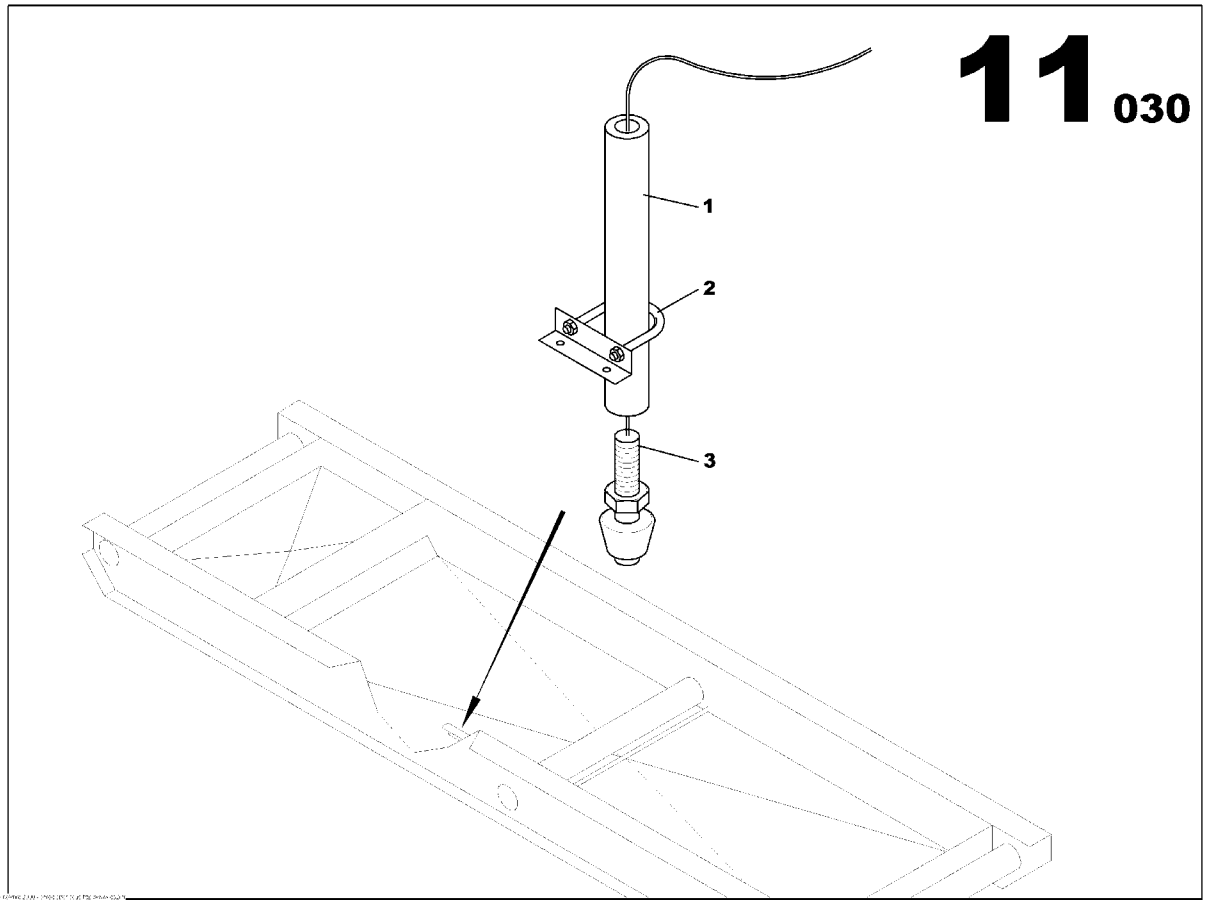

LEAKAGE DETECTION RETENTION BUND ASSEMBLY
17130279

Part numbers listed are only parts used in this model

Item	Part No.	Description	Qty	Un	From SN	To SN	Order PN	Page
1	17130428	DETECTION ESCAPE SWITCH BRACKET	1	UN			17130428	
2	85417772	HOSE CLAMP D17	1	UN			85417772	
3	85417459	LEVEL SWITCH	1	UN			85417459	

TANK GAUGE ASSEMBLY

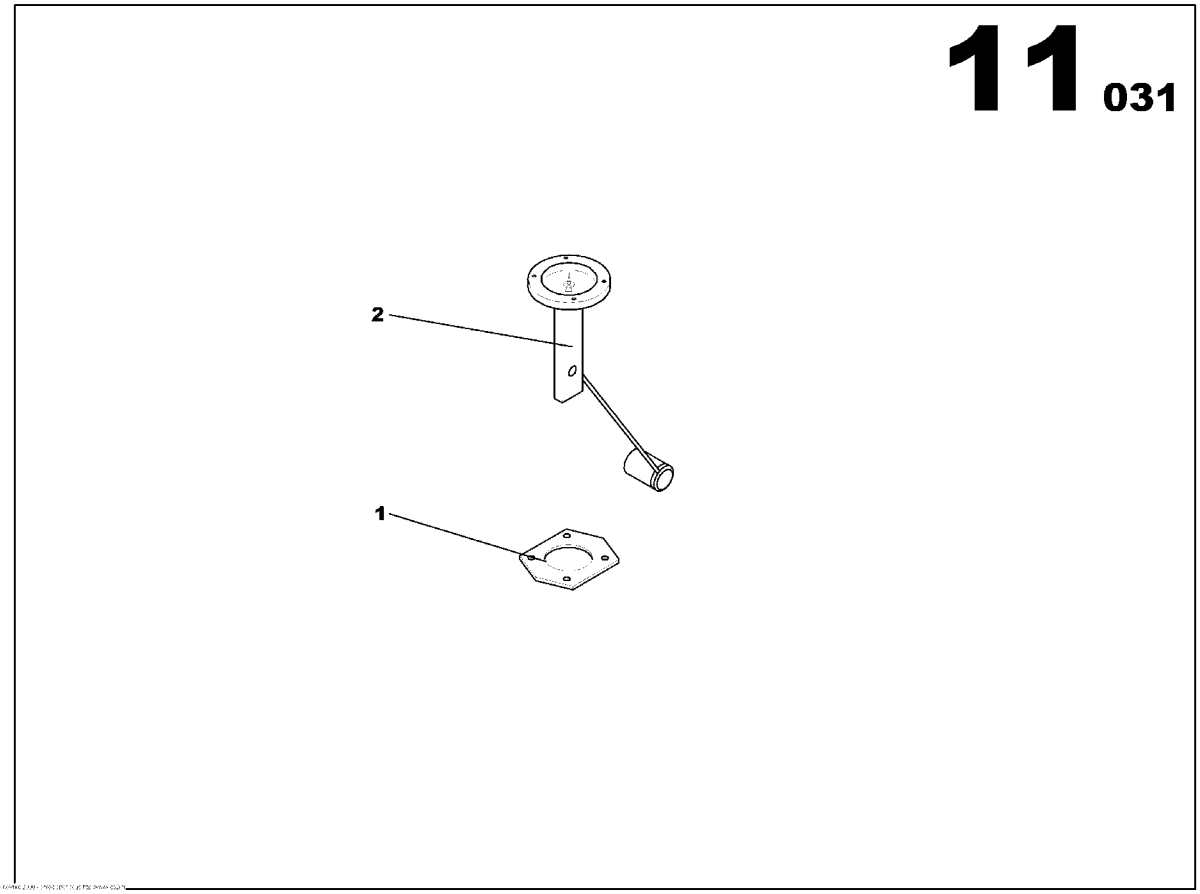

TANK GAUGE ASSEMBLY
17130287

Part numbers listed are only parts used in this model

Item	Part No.	Description	Qty	Un	From SN	To SN	Order PN	Page
1	85490811	SPECIAL FLANGE GASKET	1	UN			85490811	
2	17130295	BASE TANK FUEL GAUGE	1	UN			17130295	

COMBUSTIBLE VENT TANK ASSEMBLY

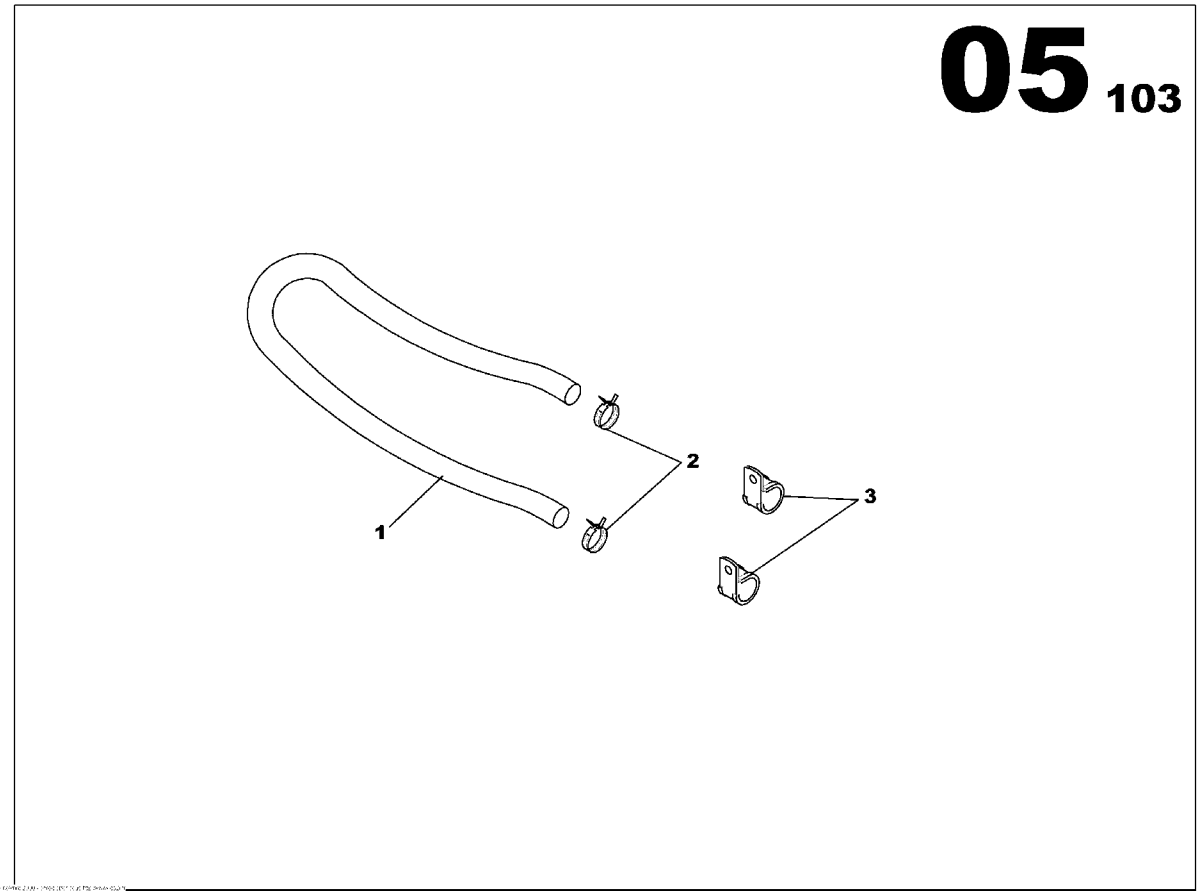

COMBUSTIBLE VENT TANK ASSEMBLY
17130196

Part numbers listed are only parts used in this model

Item	Part No.	Description	Qty	Un	From SN	To SN	Order PN	Page
1	85416436	FLEXIBLE HOSE D8x14	1	ML			85416436	
2	17130824	SPRING CLAMP D10/13	1	UN			17130824	
3	17130816	CLAMP D20	2	UN			17130816	

STARTING FUNCTION

Non illustré
Not illustrated

STARTING FUNCTION

Part numbers listed are only parts used in this model

Item	Part No.	Description	Qty	Un	From SN	To SN	Order PN	Page
1		ELECTRIC STARTER ASSEMBLY	1	UN				59

ELECTRIC STARTER ASSEMBLY

Non illustré
Not illustrated

ELECTRIC STARTER ASSEMBLY

Part numbers listed are only parts used in this model

Item	Part No.	Description	Qty	Un	From SN	To SN	Order PN	Page
	17130246	ELECTRIC STARTER ASSEMBLY	1	UN			17130246	61

ELECTRIC STARTER ASSEMBLY

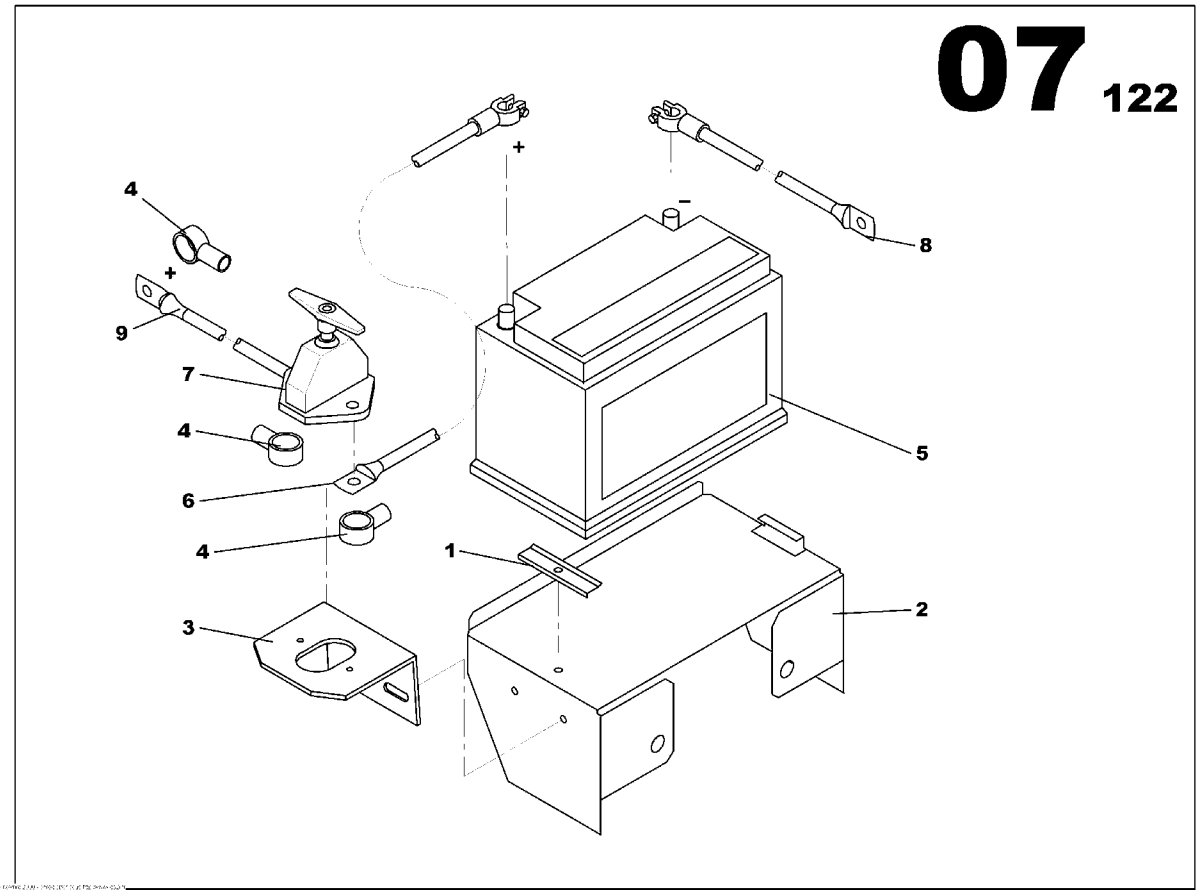

ELECTRIC STARTER ASSEMBLY
17130246

Part numbers listed are only parts used in this model

Item	Part No.	Description	Qty	Un	From SN	To SN	Order PN	Page
1	85403699	BATTERY FIXING BRACKET	1	UN			85403699	
2	85633410	BATTERY SUPPORT BRACKET	1	UN			85633410	
3	85403707	BATTERY ISOLATOR BRACKET	1	UN			85403707	
4	85502235	COWL	3	UN			85502235	
5	85403715	STARTING BATTERY 12V 70Ah 400A	1	UN			85403715	
6	85634384	BATTERY CABLE 35mm2 L0900 RED	1	UN			85634384	
7	85403723	BATTERY ISOLATOR SWITCH	1	UN			85403723	
8	85412633	BATTERY CABLE(-) 35mm2 L1200 BLACK	1	UN			85412633	
9	85634376	BATTERY CABLE(+) 35mm2 L730 RED	1	UN			85634376	

EXHAUST FUNCTION

Non illustré
Not illustrated

EXHAUST FUNCTION

Part numbers listed are only parts used in this model

Item	Part No.	Description	Qty	Un	From SN	To SN	Order PN	Page
1	85414548	EXHAUST FITTING KIT M107 ASSEMBLY	1	UN			85414548	65

EXHAUST FITTING KIT M107 ASSEMBLY

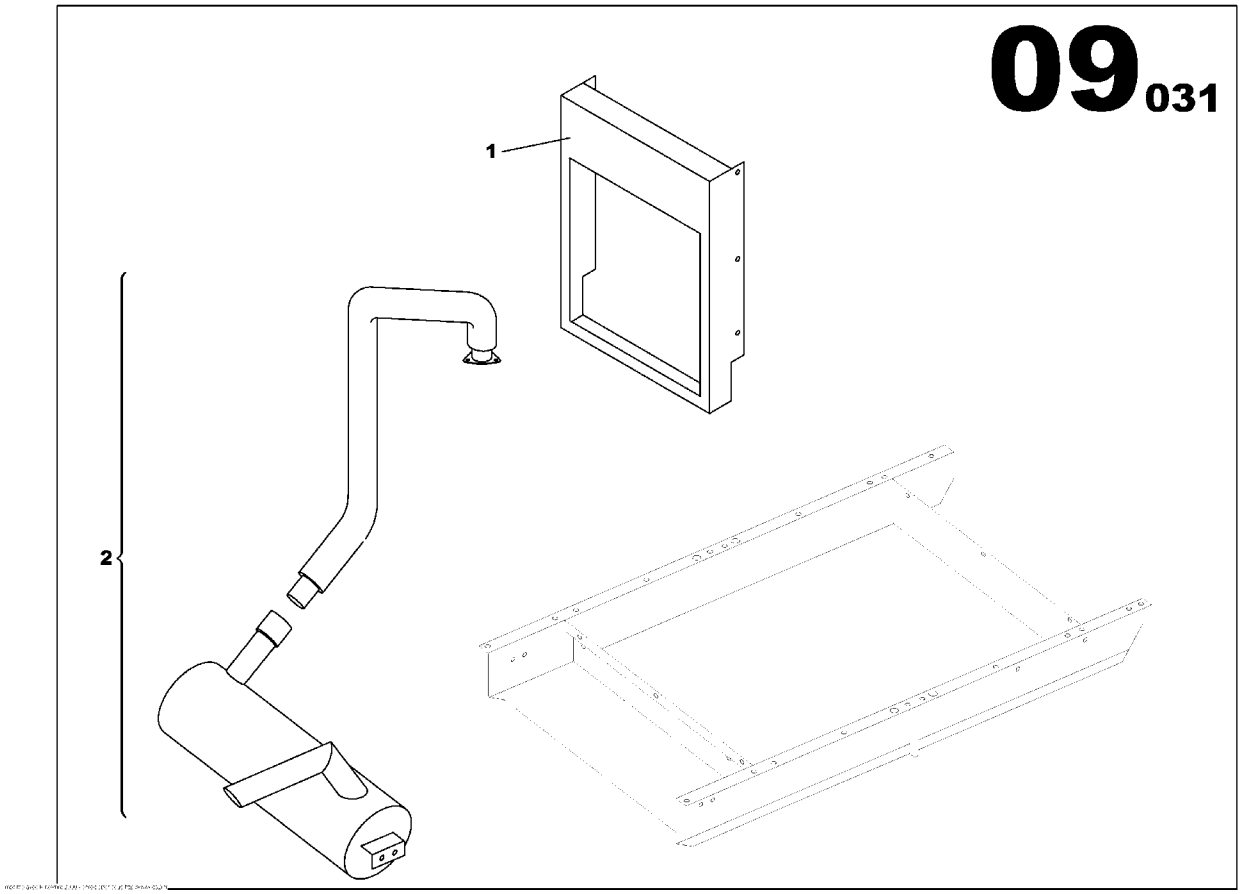

EXHAUST FITTING KIT M107 ASSEMBLY
85414548

Part numbers listed are only parts used in this model

Item	Part No.	Description	Qty	Un	From SN	To SN	Order PN	Page
1	85414571	EXHAUST MUFFLER M107 ASSEMBLY	1	UN			85414571	67
2	85632990	RADIATOR PANEL M107 MI S4Q2	1	UN			85632990	

EXHAUST MUFFLER M107 ASSEMBLY

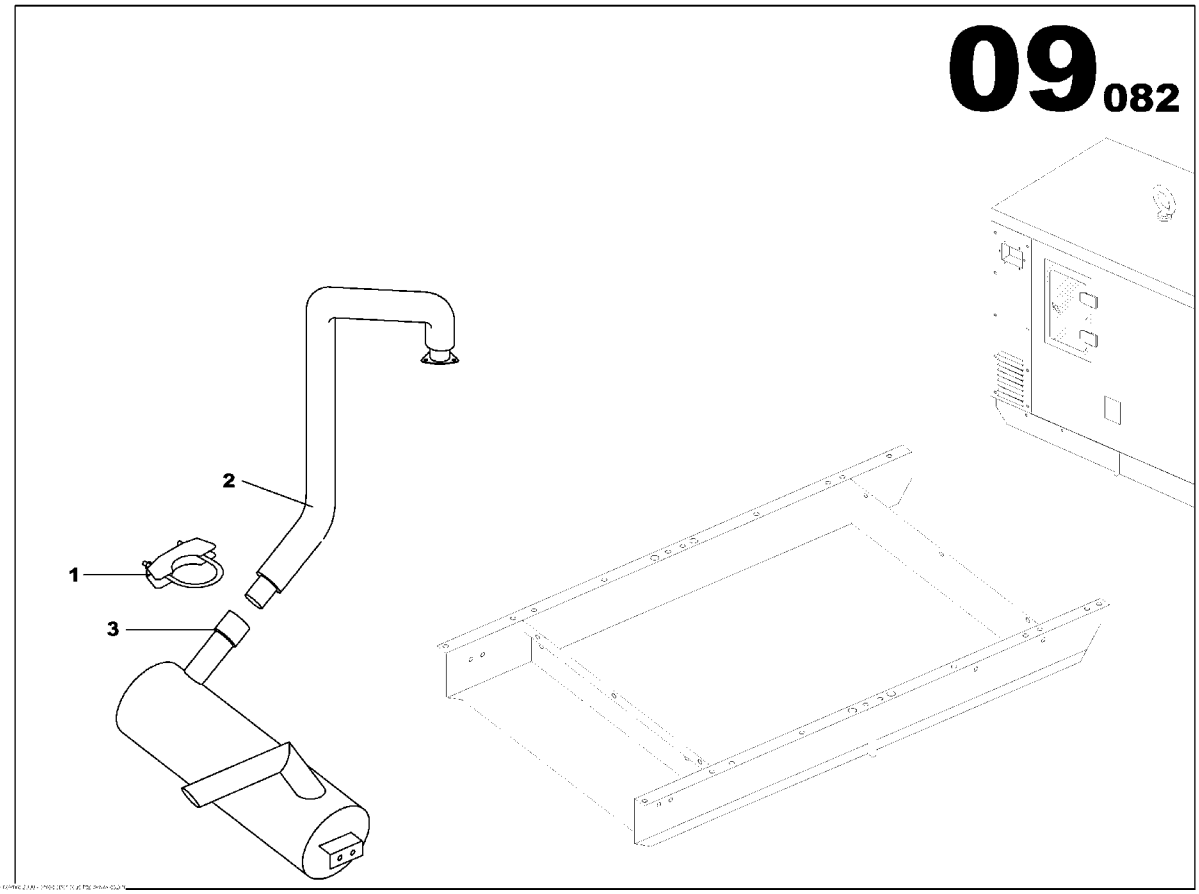

EXHAUST MUFFLER M107 ASSEMBLY
85414571

Part numbers listed are only parts used in this model

Item	Part No.	Description	Qty	Un	From SN	To SN	Order PN	Page
1	85429421	HOSE CLAMP D54	1	UN	03002053		85429421	
2	85413813	EXHAUST PIPE D50 MITSU	1	UN			85413813	
3	85633824	23dB MUFFLER	1	UN	03005015		85633824	

FRAME FUNCTION

Non illustré
Not illustrated

FRAME FUNCTION

Part numbers listed are only parts used in this model

Item	Part No.	Description	Qty	Un	From SN	To SN	Order PN	Page
1	17130337	FRAME M107 ASSEMBLY	1	UN			17130337	71
2	85498822	TRANSFORMER ASSEMBLY	1	UN			85498822	73
3	85499929	G25 ACCESSORY ASSEMBLY	1	UN			85499929	75

FRAME M107 ASSEMBLY

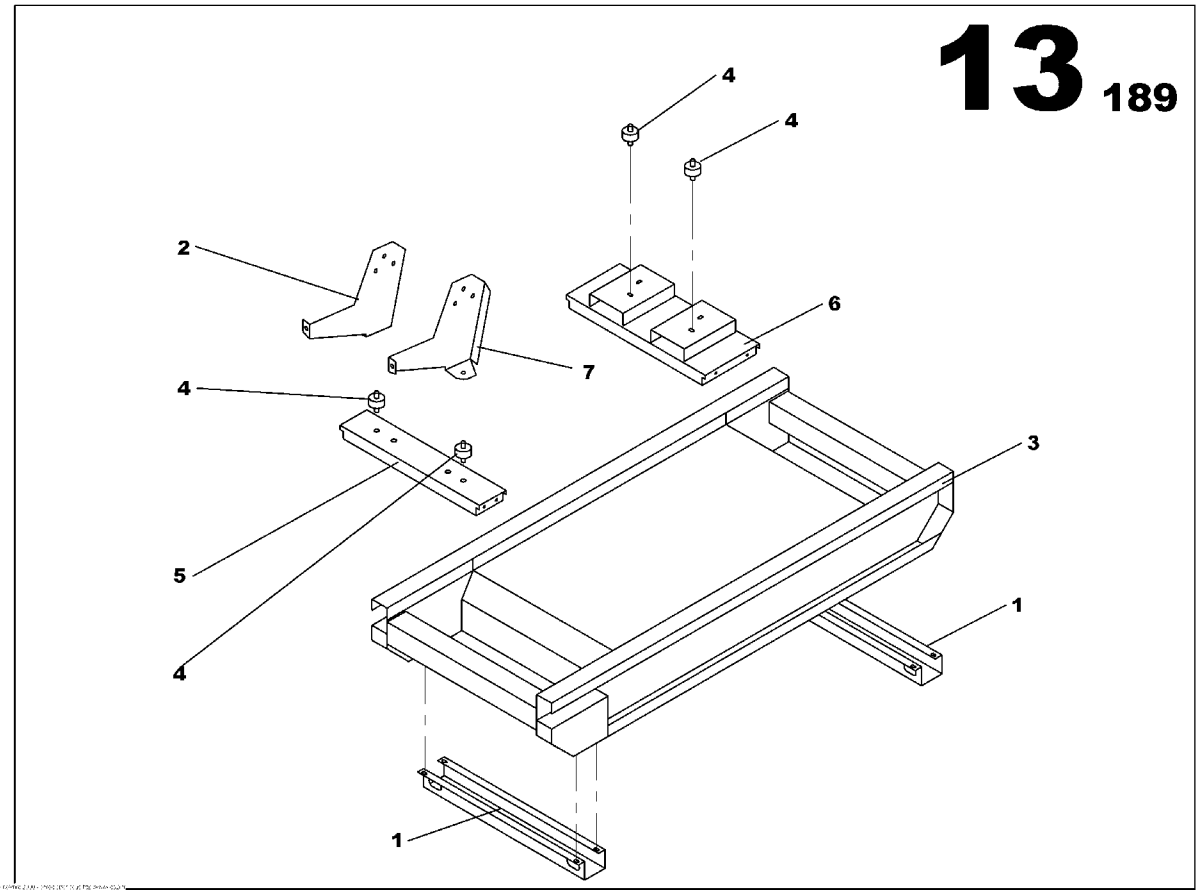

FRAME M107 ASSEMBLY
17130337

Part numbers listed are only parts used in this model

Item	Part No.	Description	Qty	Un	From SN	To SN	Order PN	Page
1	17130394	FORK LIFT CHANNEL	2	UN			17130394	
2	85416089	ENGINE SUPPORT MI S4Q2 RIGHT	1	UN			85416089	
3	17130303	FRAME M107	1	UN			17130303	
4	85401032	ANTI-VIBRATION MOUNT 600daN 8mm	4	UN			85401032	
5	17130360	ENGINE TRAVERSE	1	UN			17130360	
6	17130386	ALTERNATOR TRAVERSE M107	1	UN			17130386	
7	85416071	ENGINE SUPPORT MI S4Q2 LEFT	1	UN			85416071	

TRANSFORMER ASSEMBLY

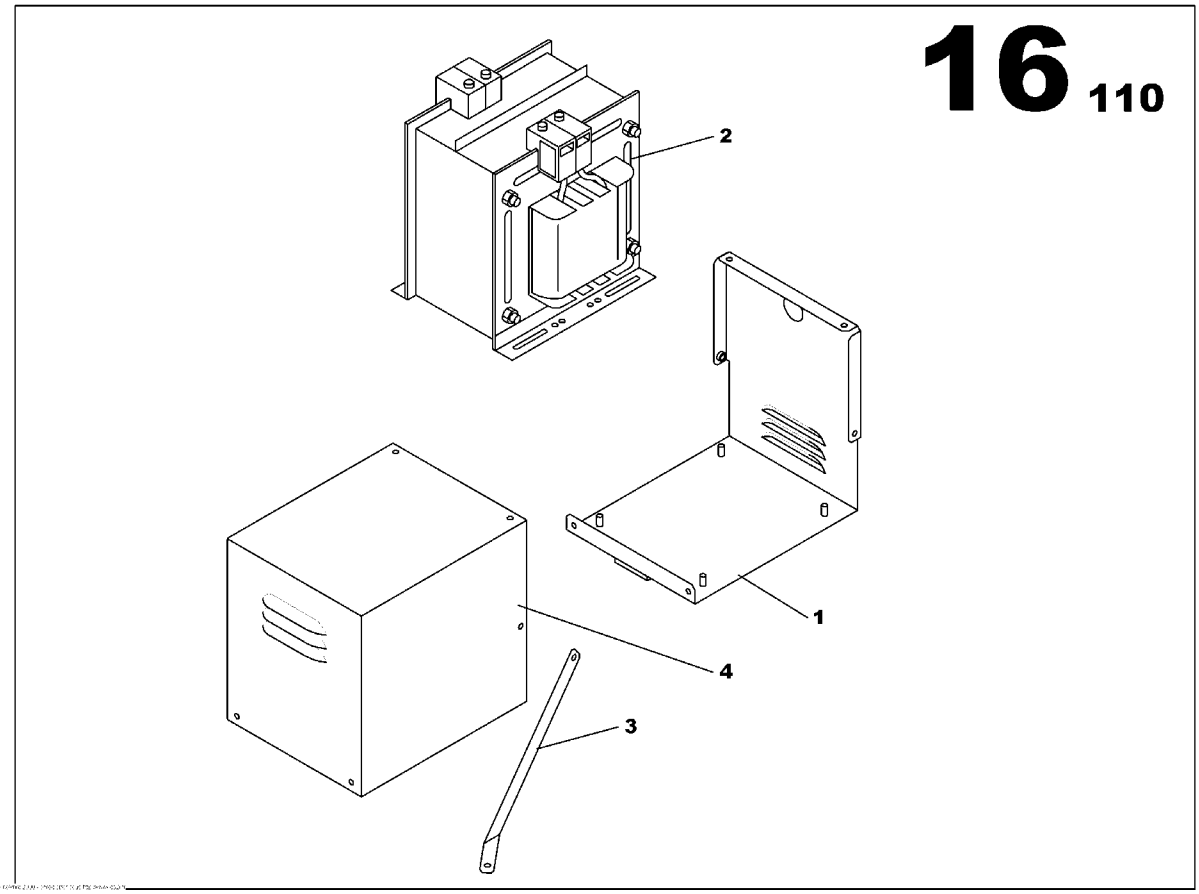

TRANSFORMER ASSEMBLY
85498822

Part numbers listed are only parts used in this model

Item	Part No.	Description	Qty	Un	From SN	To SN	Order PN	Page
1	85499051	TRANSFORMER HOUSING	1	UN			85499051	
2	85426674	VOLTAGE TRANSFORMER	1	UN			85426674	
3	85499275	ISOLATING TRANSFORMER HOUSING BRACKET	1	UN			85499275	
4	85499069	TRANSFORMER COVER	1	UN			85499069	

G25 ACCESSORY ASSEMBLY

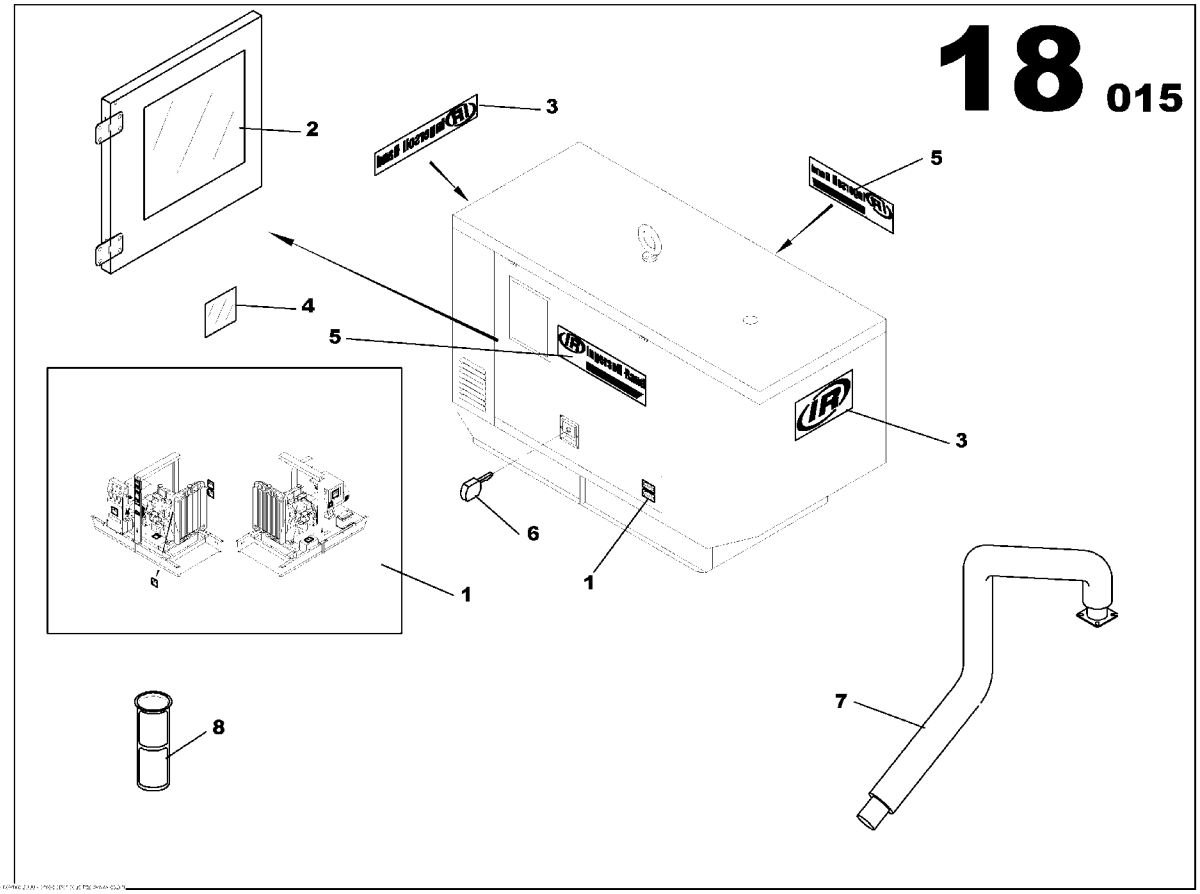

G25 ACCESSORY ASSEMBLY
85499929

Part numbers listed are only parts used in this model

Item	Part No.	Description	Qty	Un	From SN	To SN	Order PN	Page
1	85502490	SAFETY DECALS G20-25-40 ASSEMBLY	1	UN			85502490	77
2	17130840	STICKER CAPACITY DIAGRAM G25	1	UN			17130840	
3	85636553	DECALS ASSEMBLY	1	UN			85636553	79
4	17130865	STICKER PROPER VOLTAGE ADJ	1	UN	03006078		17130865	
5	85500023	STICKER G25	2	UN			85500023	
6	85509263	WBH LATCHE KEY	1	UN			85509263	
7	85413821	EXHAUST PIPE D50 MITSU	1	UN	03006052		85413821	
8	85633386	FUEL FILTER	1	UN	03010525		85633386	

SAFETY DECALS G20-25-40 ASSEMBLY

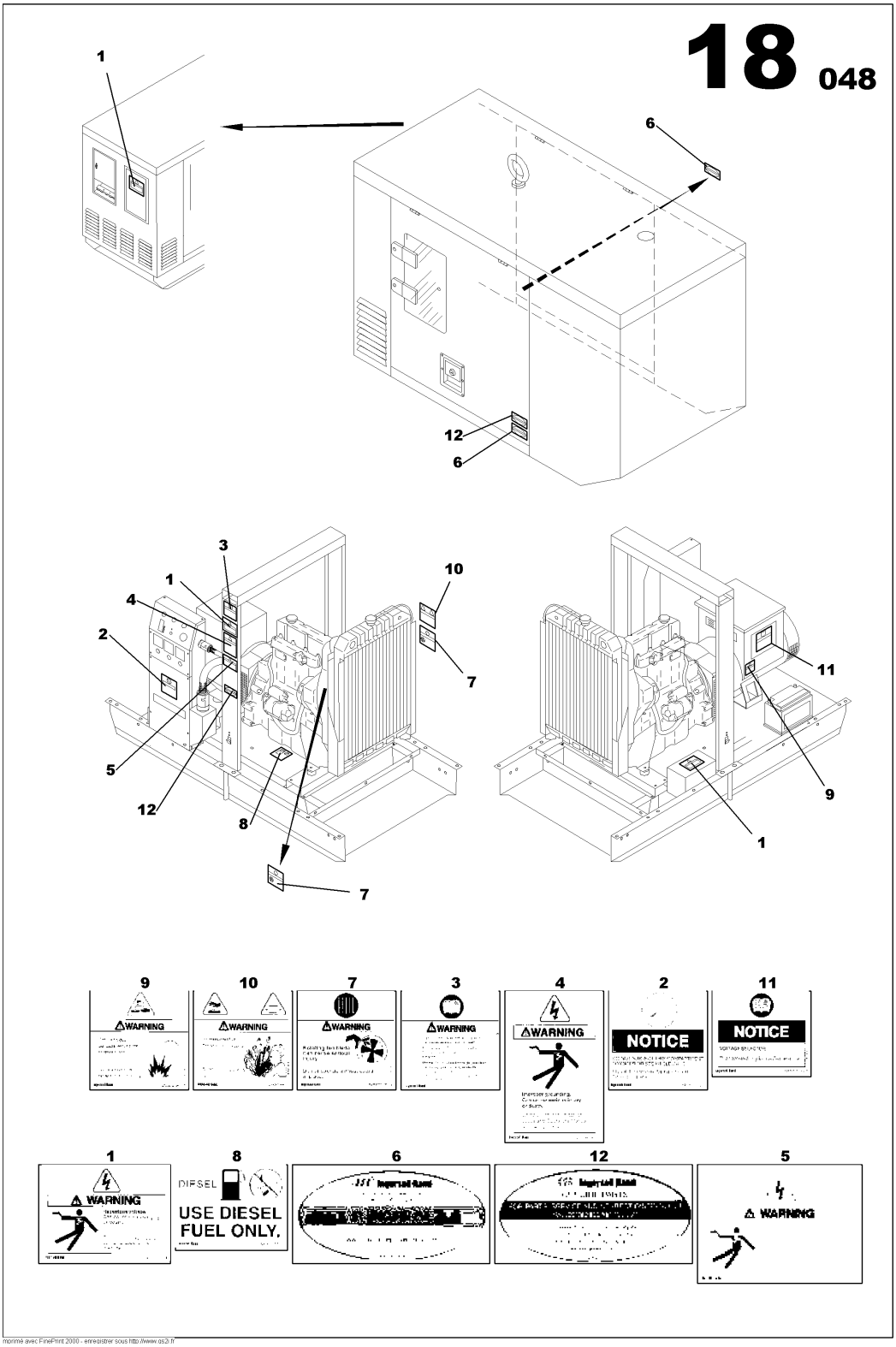

imprimé avec FinePrint 2000 - enregistrer sous http://www.ds2.fr

SAFETY DECALS G20-25-40 ASSEMBLY
85502490

Part numbers listed are only parts used in this model

Item	Part No.	Description	Qty	Un	From SN	To SN	Order PN	Page
1	54605027	STICKER WARNING DANGER	3	UN			54605027	
2	54605001	STICKER INSTRUCTIONS	1	UN			54605001	
3	54568787	STICKER INSTRUCTIONS	1	UN			54568787	
4	54604996	STICKER WARNING DANGER	1	UN			54604996	
5	54627773	STICKER WARNING DANGER	1	UN			54627773	
6	54640008	STICKER OIL ENGINE	2	UN			54640008	
7	54568779	STICKER VENTILATOR DANGER SYMBOL	2	UN			54568779	
8	54625207	STICKER DIESEL ONLY	1	UN			54625207	
9	54568753	STICKER BATTERY DANGER SYMBOL	1	UN			54568753	
10	54568761	STICKER RADIATOR DANGER SYMBOL	1	UN			54568761	
11	54605019	STICKER INSTRUCTIONS VOLTAGE SELECTOR	1	UN			54605019	
12	54640024	STICKER GENUINE PARTS	2	UN			54640024	

DECALS ASSEMBLY

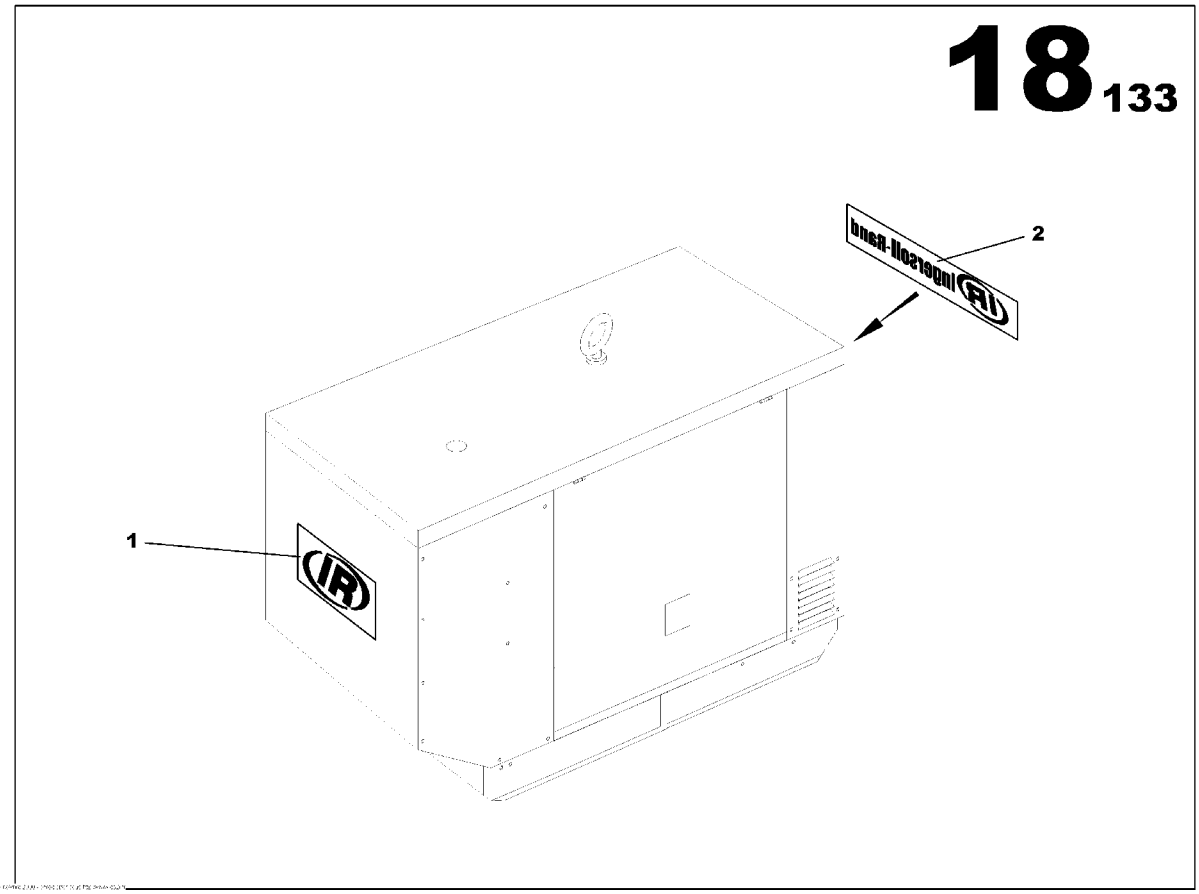

DECALS ASSEMBLY
85636553

Part numbers listed are only parts used in this model

Item	Part No.	Description	Qty	Un	From SN	To SN	Order PN	Page
1	85500197	STICKER IR	1	UN			85500197	
2	85500221	STICKER IR SYMBOL	1	UN			85500221	

CANOPY FONCTION

Non illustré
Not illustrated

CANOPY FONCTION

Part numbers listed are only parts used in this model

Item	Part No.	Description	Qty	Un	From SN	To SN	Order PN	Page
1	85634202	CANOPY M107 ASSEMBLY	1	UN			85634202	83
2	85491991	EMERGENCY STOP PANEL ASSEMBLY	1	UN			85491991	93

CANOPY M107 ASSEMBLY

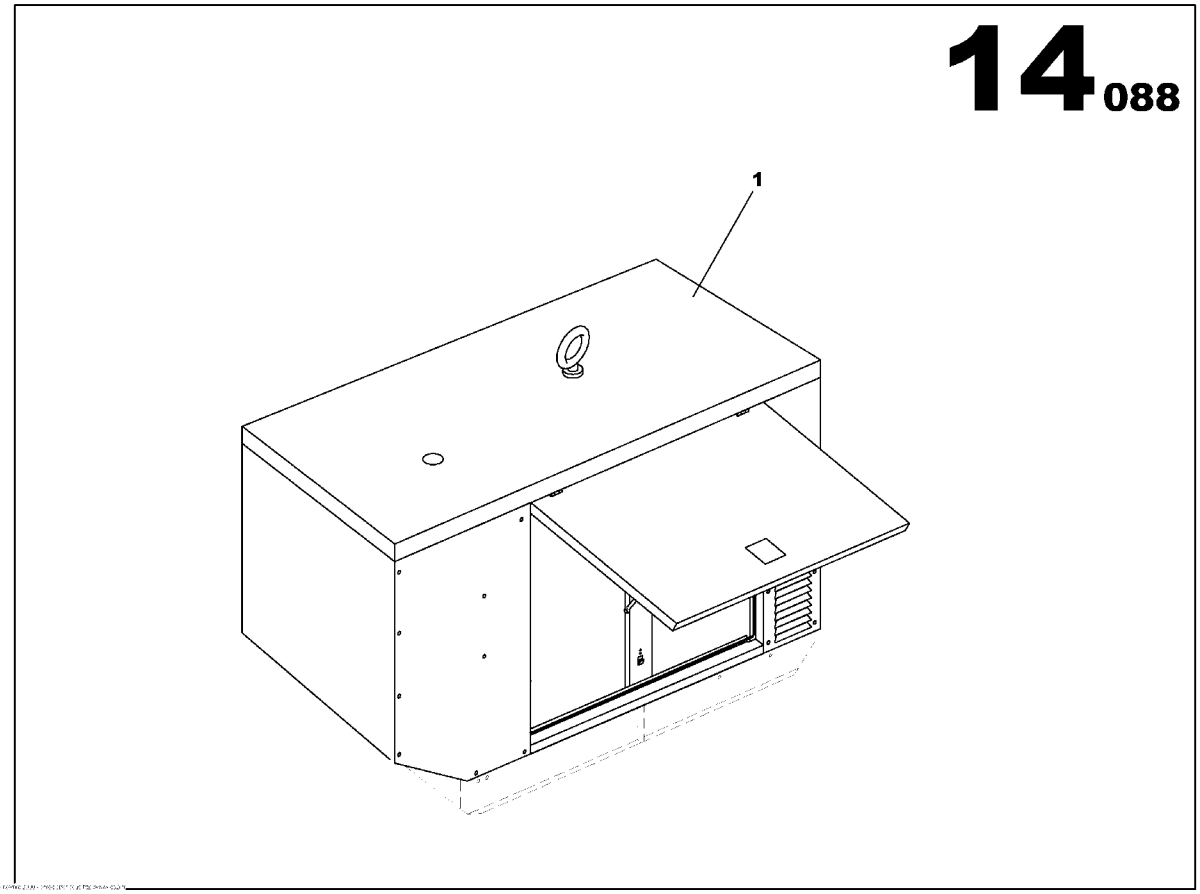

CANOPY M107 ASSEMBLY
85634202

Part numbers listed are only parts used in this model

Item	Part No.	Description	Qty	Un	From SN	To SN	Order PN	Page
1	85634194	CANOPY M107 ASSEMBLY	1	UN			85634194	85

CANOPY M107 ASSEMBLY

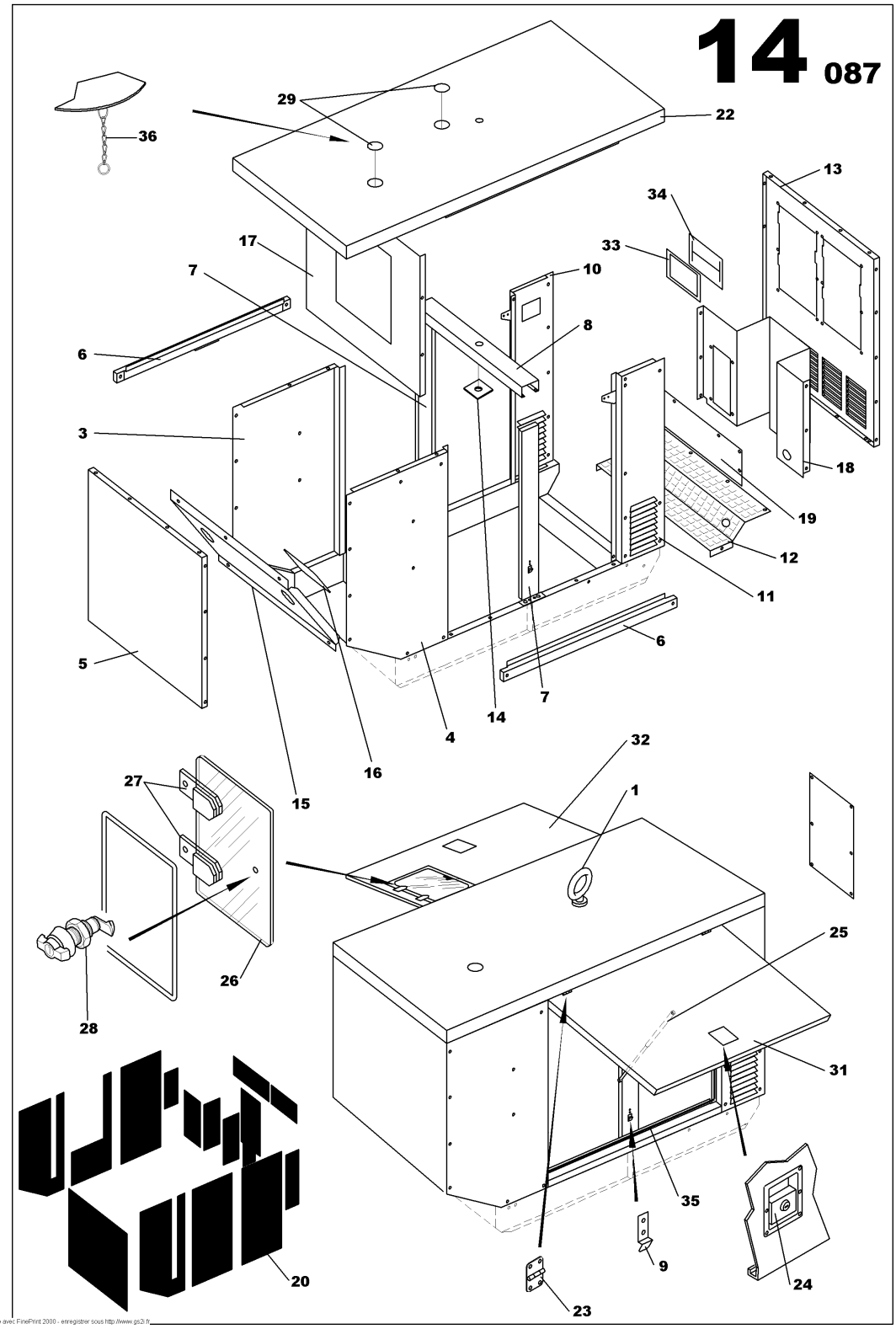

CANOPY M107 ASSEMBLY
85634194

Part numbers listed are only parts used in this model

Item	Part No.	Description	Qty	Un	From SN	To SN	Order PN	Page
1	85492700	LIFTING EYE D58	1	UN			85492700	
3	85415354	M107 CANOPY RIGHT HEAD PANEL	1	UN			85415354	
4	85415362	M107 CANOPY LEFT HEAD PANEL	1	UN			85415362	
5	85415347	M107 CANOPY HEAD PANEL	1	UN			85415347	
6	85415370	CANOPY SIDE PANEL M107	2	UN			85415370	
7	85412484	SIDE SUPPORT ARCH UPRIGHTS M107	2	UN			85412484	
8	85412492	TRANSVERSE ARCH SUPPORT M107	1	UN			85412492	
9	85413516	STRIKER PLATE M107 CANOPY DOOR	2	UN			85413516	
10	85497410	M107 CANOPY RIGHT REAR PANEL	1	UN			85497410	
11	85497428	M107 CANOPY LEFT REAR PANEL	1	UN			85497428	
12	85497436	REAR AIR INTAKE LOUVER M107 CANOPY	1	UN			85497436	
13	85415313	M107 CANOPY REAR PANEL	1	UN			85415313	
14	85509594	SUPPORT ARCH BRACKET PANEL	1	UN			85509594	
15	85509560	RADIATOR BLACK PANEL M107	1	UN			85509560	
16	85509578	RADIATOR BLACK PANEL M107	1	UN			85509578	
17	85509586	RADIATOR PANEL M107 JD 3039D	1	UN			85509586	
18	85633048	AIR DEFLECTOR	1	UN			85633048	
19	85633055	AIR DEFLECTOR	1	UN			85633055	
20	85633063	SOUNDPROOF PANELS BATCH M107	1	UN			85633063	
22	85634319	CANOPY TOP M107	1	UN			85634319	
23	85406130	DOOR HINGE	4	UN			85406130	
24	85509305	CANOPY DOOR LOCK KEY LOCK	2	UN			85509305	
25	85416477	GAS FILLED DAMPER 70kg ROD D10	2	UN			85416477	
26	85416501	SECURITY WINDOW M107	1	UN			85416501	
27	85412831	DOOR HINGE	2	UN			85412831	
28	85402907	SLAM SHUT ASSEMBLY	1	UN			85402907	89
29	85621142	FLAP D160	2	UN			85621142	
31	85509859	CANOPY DOOR M107 LEFT	1	UN			85509859	

CANOPY M107 ASSEMBLY

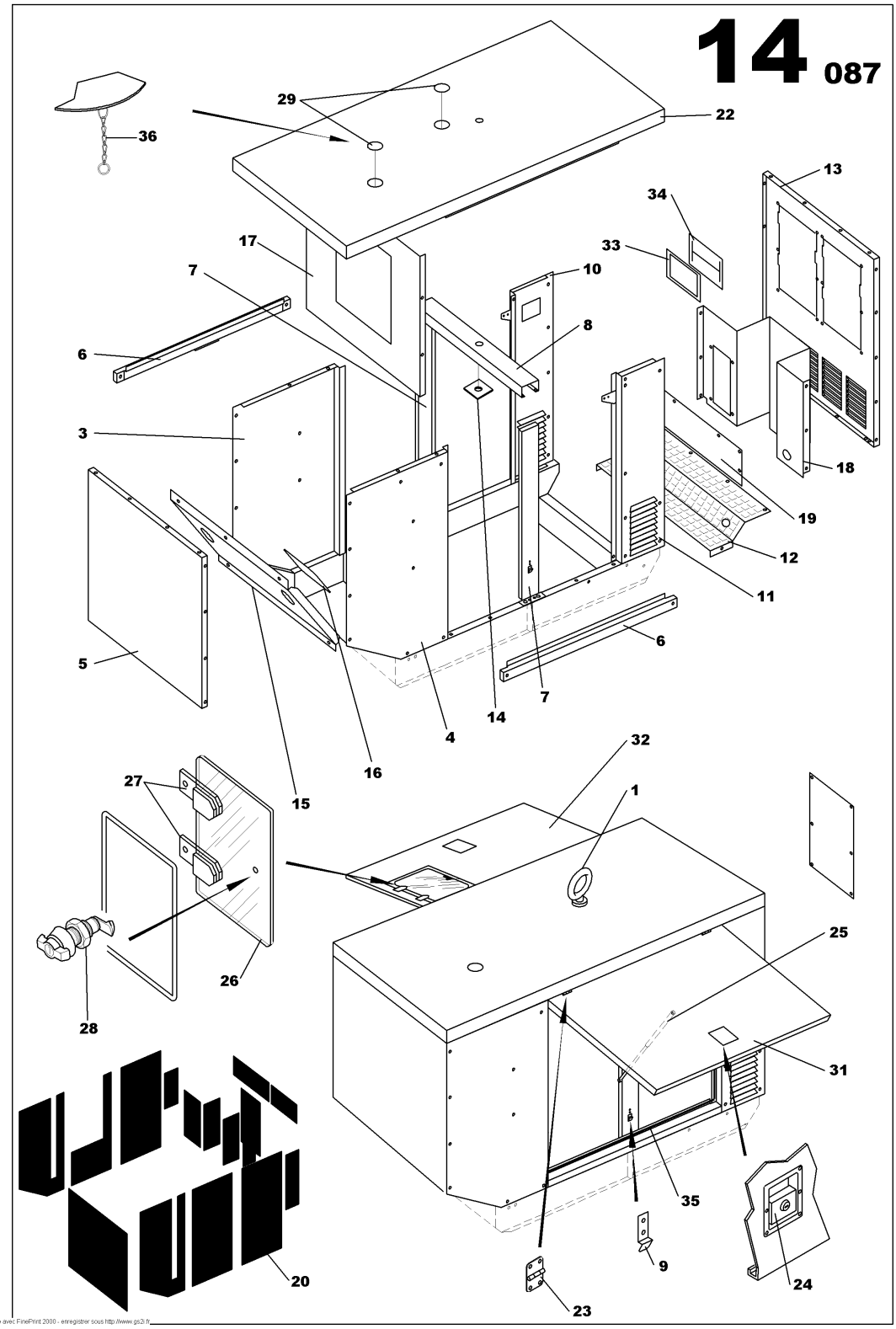

CANOPY M107 ASSEMBLY
85634194

Part numbers listed are only parts used in this model

Item	Part No.	Description	Qty	Un	From SN	To SN	Order PN	Page
32	85509842	CANOPY DOOR M107 RIGHT	1	UN			85509842	
33	85634939	WIRE BIB OUTPUT BRACKET M107	1	UN			85634939	
34	85621191	CABLE OUTPUT RUBBER SCREEN	1	UN			85621191	
35	85413722	LINEAR SEAL	8.3	ML			85413722	
36	85632016	CHAIN	2	UN			85632016	

SLAM SHUT ASSEMBLY

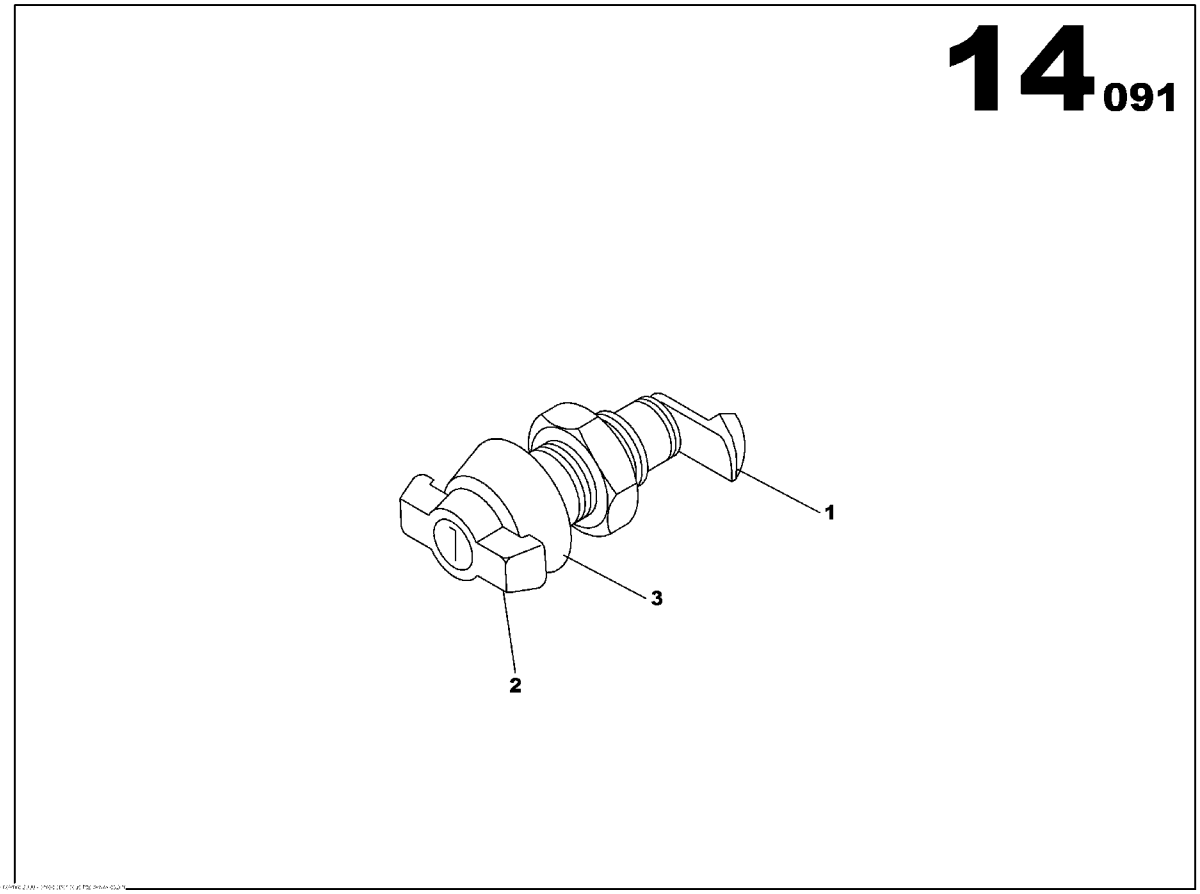

SLAM SHUT ASSEMBLY
85402907

Part numbers listed are only parts used in this model

Item	Part No.	Description	Qty	Un	From SN	To SN	Order PN	Page
1	85406221	SLAM SHUT DOOR LATCH	1	UN			85406221	
2	85406239	SLAM SHUT LATCH HANDLE	1	UN			85406239	91
3	85406247	SLAM SHUT FASTENER	1	UN			85406247	

SLAM SHUT LATCH HANDLE

Non illustré
Not illustrated

SLAM SHUT LATCH HANDLE
85406239

Part numbers listed are only parts used in this model

Item	Part No.	Description	Qty	Un	From SN	To SN	Order PN	Page
1	85632883	WBH LATCHE KEY	1	UN			85632883	

EMERGENCY STOP PANEL ASSEMBLY

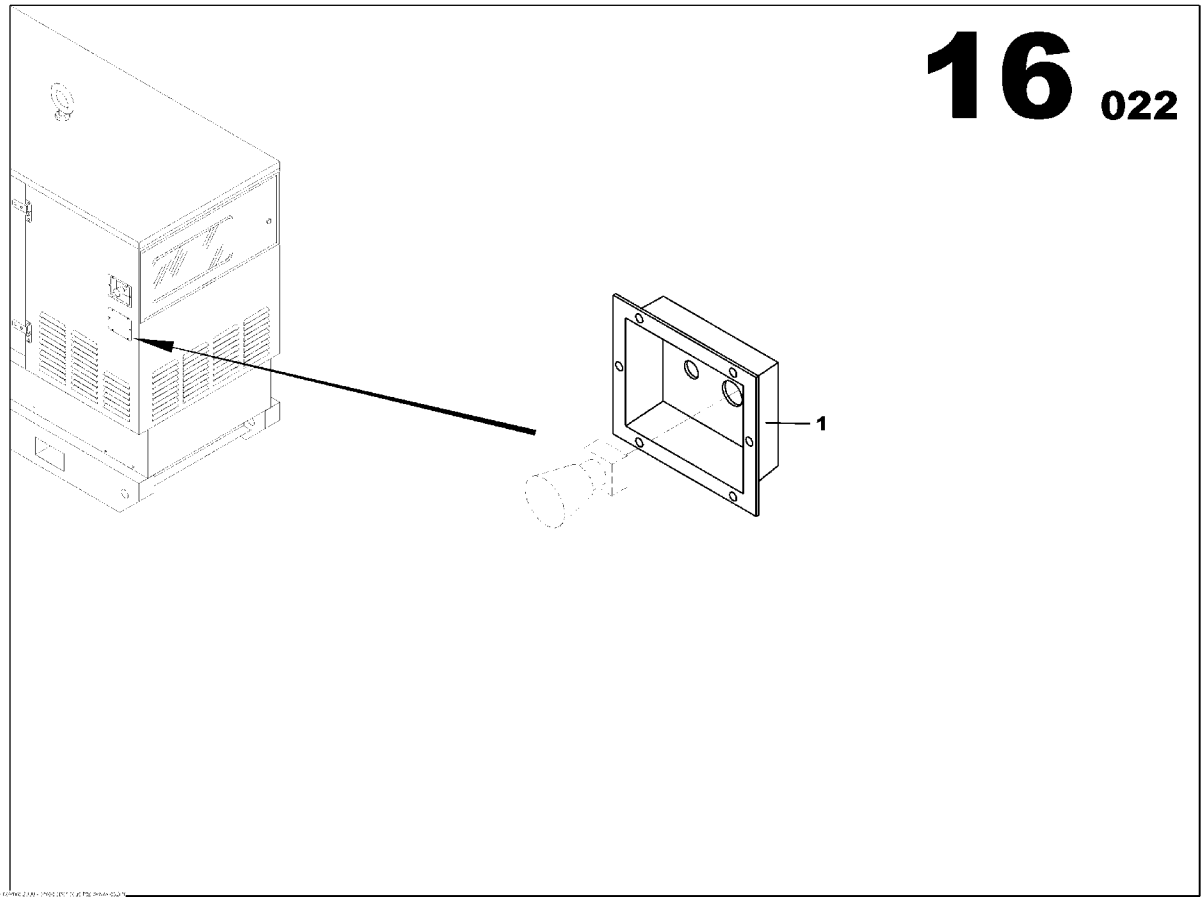

EMERGENCY STOP PANEL ASSEMBLY
85491991

Part numbers listed are only parts used in this model

Item	Part No.	Description	Qty	Un	From SN	To SN	Order PN	Page
1	85407294	EMERGENCY STOP PANEL	1	UN			85407294	

ELECTRICAL FUNCTION

Non illustré
Not illustrated

ELECTRICAL FUNCTION

Part numbers listed are only parts used in this model

Item	Part No.	Description	Qty	Un	From SN	To SN	Order PN	Page
1		ELECTRIC SUPPLY FUNCTION	1	UN				97

ELECTRIC SUPPLY FUNCTION

Non illustré
Not illustrated

ELECTRIC SUPPLY FUNCTION

Part numbers listed are only parts used in this model

Item	Part No.	Description	Qty	Un	From SN	To SN	Order PN	Page
1	85499796	STANDARD DASHBOARD ASSEMBLY IR G25	1	UN			85499796	99

STANDARD DASHBOARD ASSEMBLY IR G25

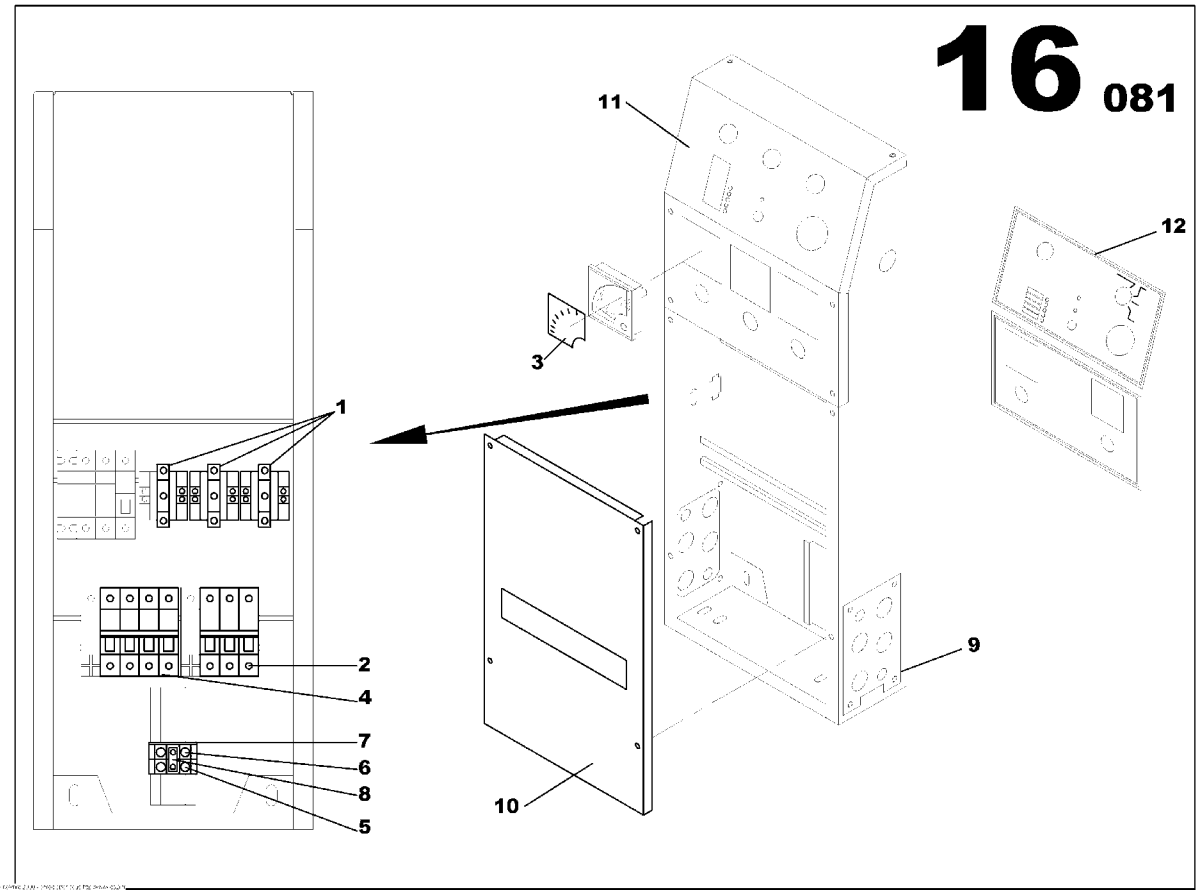

STANDARD DASHBOARD ASSEMBLY IR G25
85499796

Part numbers listed are only parts used in this model

Item	Part No.	Description	Qty	Un	From SN	To SN	Order PN	Page
1	85408425	CURRENT TRANSFORMER 100/5	3	UN			85408425	
2	85408466	MOULDED CASE CIRCUIT BREAKER 4x32A	1	UN			85408466	
3	85499622	AMPERMETRIC SCALE	1	UN			85499622	
4	85426443	MOULDED CASE CIRCUIT BREAKER 2x80A	1	UN			85426443	
5	85408797	TERMINAL BLOCK	1	UN			85408797	
6	85505667	BLUE CONNECTING TERMINAL	1	UN			85505667	
7	85505675	PLASTIC COVER TERMINAL BLOCK	1	UN			85505675	
8	85505600	TERMINAL JUNCTION	1	UN			85505600	
9	85498798	HOUSING ASSEMBLY	1	UN			85498798	101
10	17130436	CIRCUIT BREAKER PROTECTION PANEL OPTION	1	UN			17130436	103
11	85414985	M150 PANEL ASSEMBLY	1	UN			85414985	105
12	85499812	IR PLASTIC PLATE OPTION	1	UN			85499812	109

HOUSING ASSEMBLY

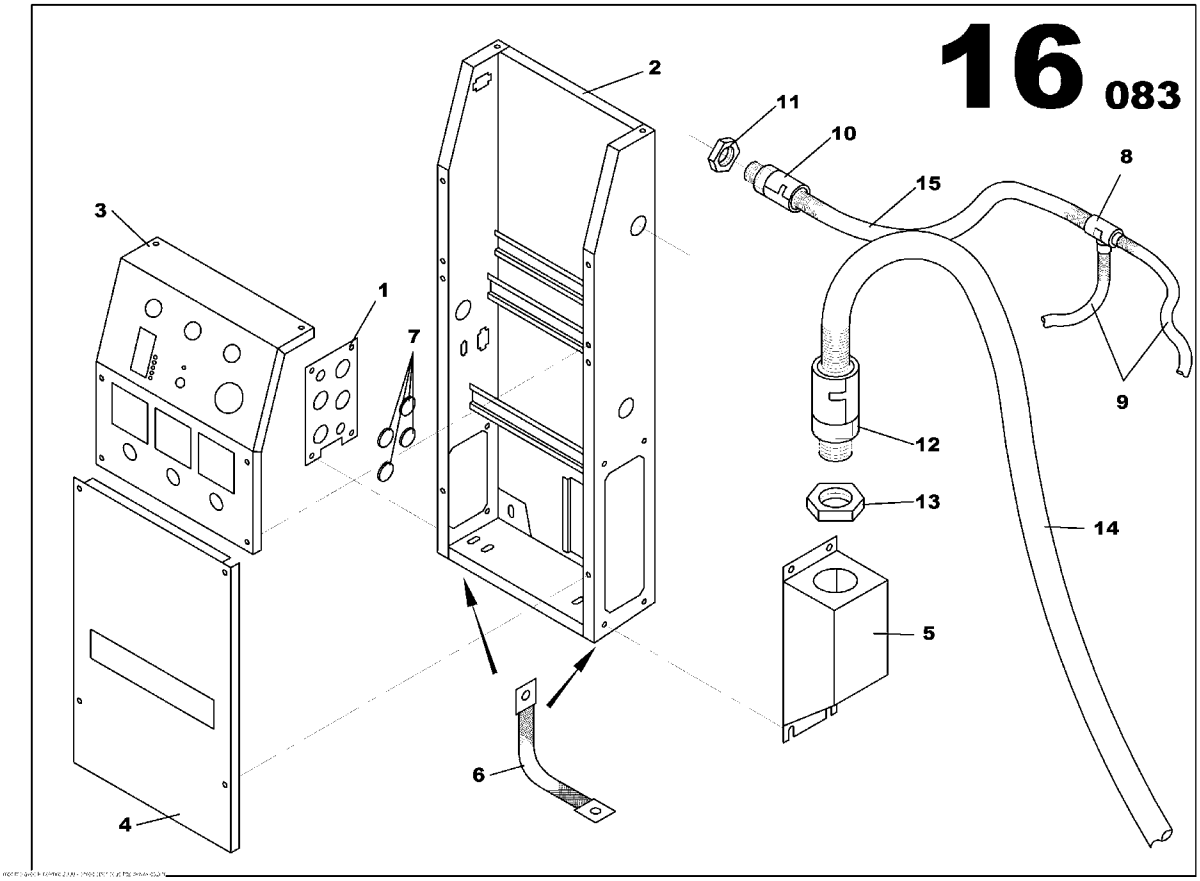

HOUSING ASSEMBLY
85498798

Part numbers listed are only parts used in this model

Item	Part No.	Description	Qty	Un	From SN	To SN	Order PN	Page
1	85498756	GLAND NUT PLATE	1	UN			85498756	
2	85416238	DASHBOARD BRACKET	1	UN			85416238	
3	85413136	CONTROL PANEL COVER	1	UN			85413136	
4	85413144	CONTROL PANEL COVER	1	UN			85413144	
5	85505550	CONNECTION HOUSING	1	UN			85505550	
6	85505543	GROUND WIRES 16mm2	2	UN			85505543	
7	85415388	RUBBER GROMMET D22	4	UN			85415388	
8	85505568	T-PIECE 16*13*13	1	UN			85505568	
9	85505584	ELECTRICAL SHAFT D13	0.98	ML			85505584	
10	85505592	ELECTRICAL UNION	1	UN			85505592	
11	85408664	GLAND NUT SCREW PG16	1	UN			85408664	
12	85501575	PIPE UNION PG36	1	UN			85501575	
13	85408680	GLAND NUT SCREW PG36	1	UN			85408680	
14	85499440	ELECTRICAL SHAFT D36	1	UN			85499440	
15	85505576	ELECTRICAL SHAFT D16	0.44	ML			85505576	

CIRCUIT BREAKER PROTECTION PANEL OPTION

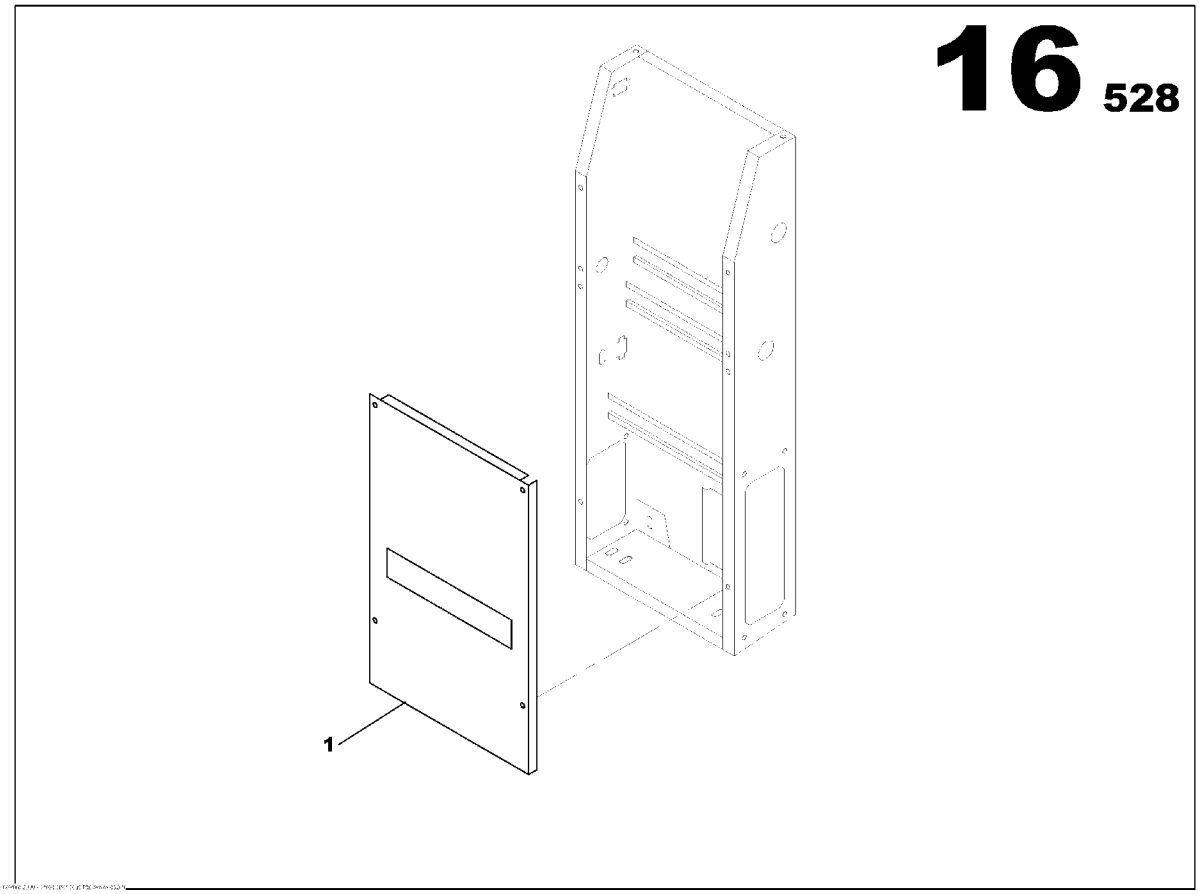

CIRCUIT BREAKER PROTECTION PANEL OPTION
17130436

Part numbers listed are only parts used in this model

Item	Part No.	Description	Qty	Un	From SN	To SN	Order PN	Page
1	85413144	CONTROL PANEL COVER	1	UN			85413144	

M150 PANEL ASSEMBLY

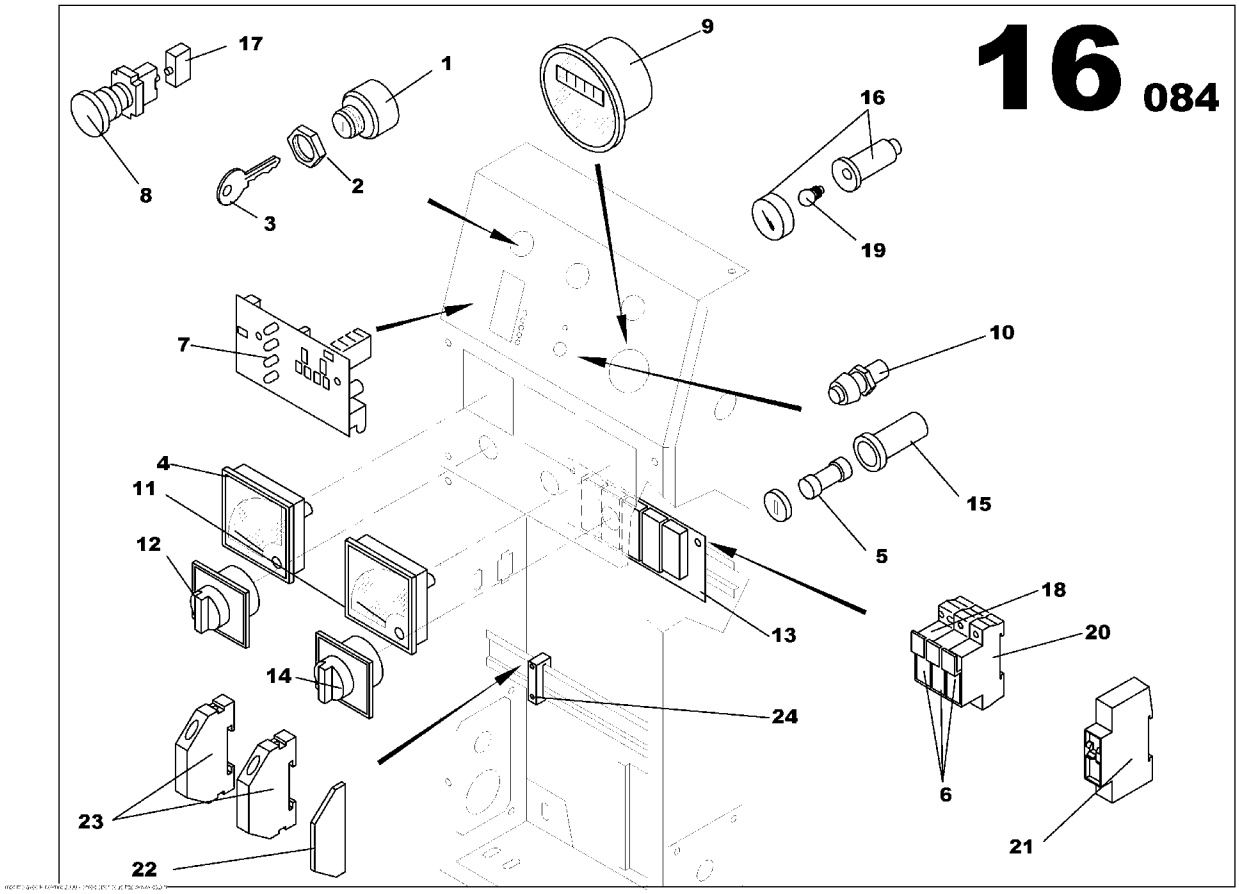

M150 PANEL ASSEMBLY
85414985

Part numbers listed are only parts used in this model

Item	Part No.	Description	Qty	Un	From SN	To SN	Order PN	Page
1	85412948	KEY SELECTOR SWITCH	1	UN			85412948	
2	85413268	SWITCH NUT	1	UN			85413268	
3	85412872	KEY SWITCH	1	UN			85412872	
4	85416519	VOLTMETER 0/500V	1	UN			85416519	
5	85413482	FUSE CYLINDRICAL 5A	1	UN			85413482	
6	85413490	FUSE CYLINDRICAL 6A	3	UN			85413490	
7	85402527	CARD PGS	1	UN			85402527	
8	85632370	EMRGENCY STOP BUTTON ASSEMBLY	1	UN	03002408		85632370	107
9	85412971	HOUR METER	1	UN			85412971	
10	85412609	PUSH BUTTON D12	1	UN			85412609	
11	85402477	AMMETER WITH NEEDLE 72x72	1	UN			85402477	
12	85412955	VOLTMETER SELECTOR SWITCH	1	UN			85412955	
13	85402576	CARD RD2	1	UN			85402576	
14	85412930	AMMETER SELECTOR SWITCH	1	UN			85412930	
15	85415503	FUSE HOUSING 10.5x38	1	UN			85415503	
16	85416527	PANEL LIGHT CYLINDRIC D22	1	UN			85416527	
17	85508638	AUXILARY CONTACT NO+NC	2	UN			85508638	
18	85413508	NEUTRAL FUSE CYLINDRICAL	1	UN			85413508	
19	85402519	LAMP 12V BA9S TYPE	1	UN			85402519	
20	85490472	FUSE HOLDER	1	UN			85490472	
21	85500379	MOULDED CASE CIRCUIT BREAKER 1x16A	1	UN			85500379	
22	85505683	PLASTIC COVER TERMINAL BLOCK	1	UN			85505683	
23	85505691	TERMINAL CONNECTION	2	UN			85505691	
24	85408854	STOP	7	UN			85408854	

EMRGENCY STOP BUTTON ASSEMBLY

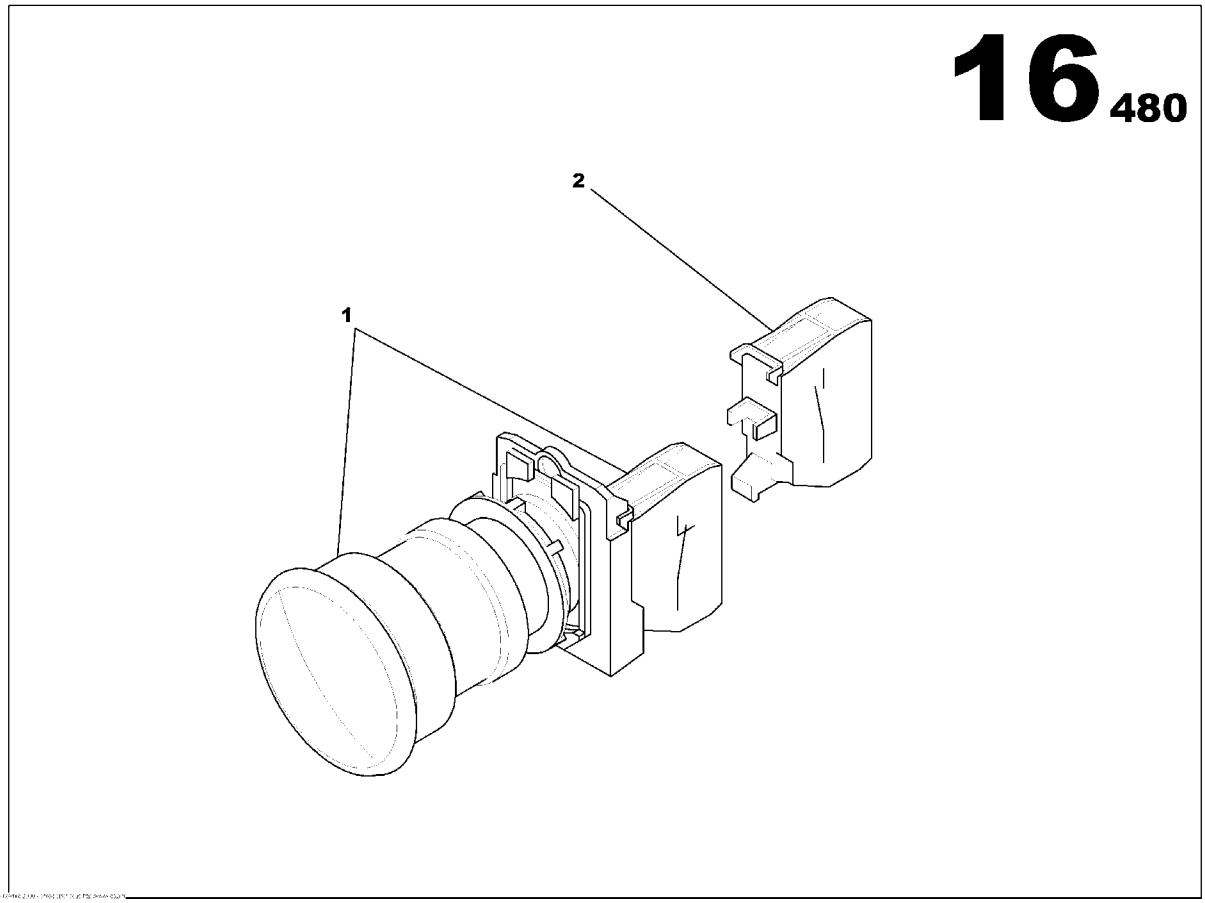

EMRGENCY STOP BUTTON ASSEMBLY
85632370

Part numbers listed are only parts used in this model

Item	Part No.	Description	Qty	Un	From SN	To SN	Order PN	Page
1	85631422	EMERGENCY STOP BUTTON	1	UN			85631422	
2	85632362	AUXILARY CONTACT NO	1	UN			85632362	

IR PLASTIC PLATE OPTION

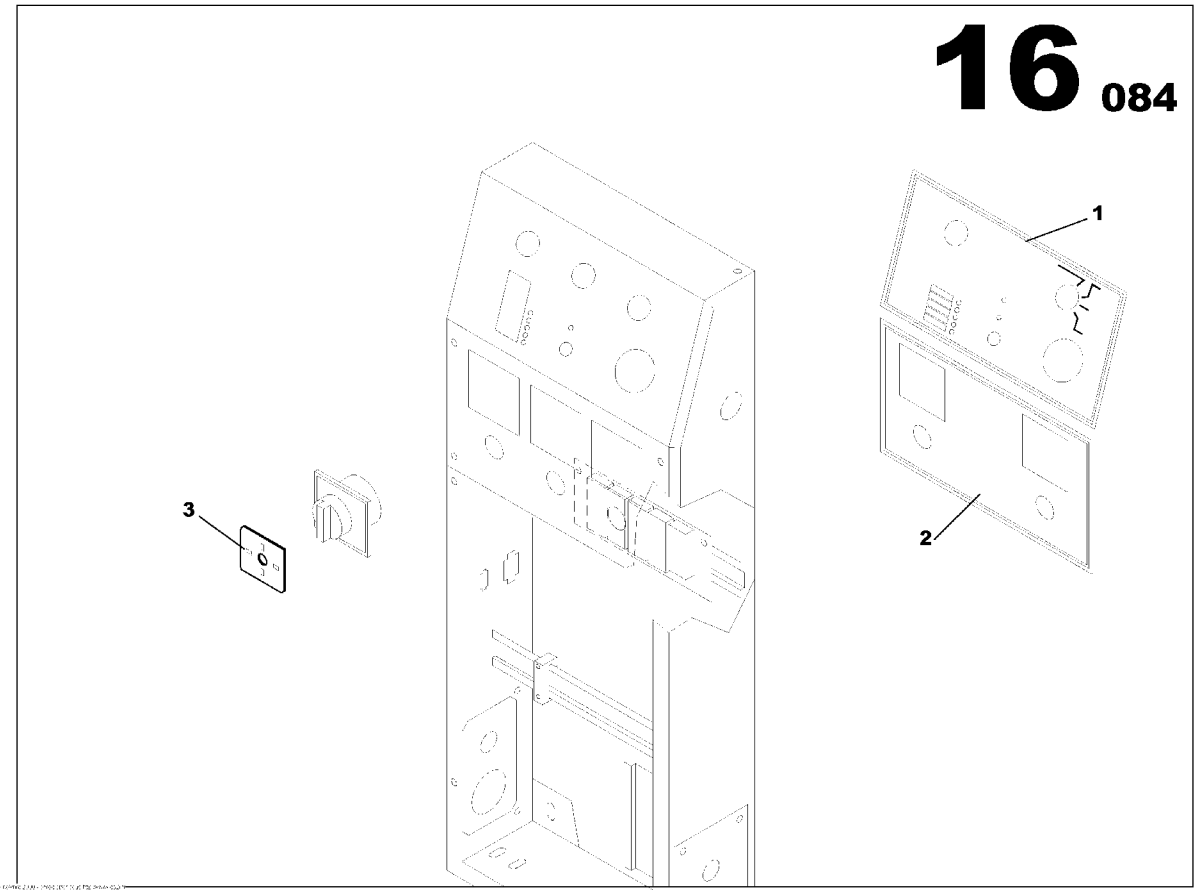

IR PLASTIC PLATE OPTION
85499812

Part numbers listed are only parts used in this model

Item	Part No.	Description	Qty	Un	From SN	To SN	Order PN	Page
1	85505634	PLASTIC PLATE L2450xh140	1	UN			85505634	
2	85413797	PLASTIC PLATE L235xh245	1	UN			85413797	
3	85505659	AMPEREMETRE INDICATOR PLATE	1	UN			85505659	

POWER CONNECTION BLOCK FUNCTION

Non illustré
Not illustrated

POWER CONNECTION BLOCK FUNCTION

Part numbers listed are only parts used in this model

Item	Part No.	Description	Qty	Un	From SN	To SN	Order PN	Page
1	85498947	SOCKET PANEL M107 ASSEMBLY	1	UN			85498947	113
2	85498954	TERMINAL M107 ASSEMBLY	1	UN			85498954	119

SOCKET PANEL M107 ASSEMBLY

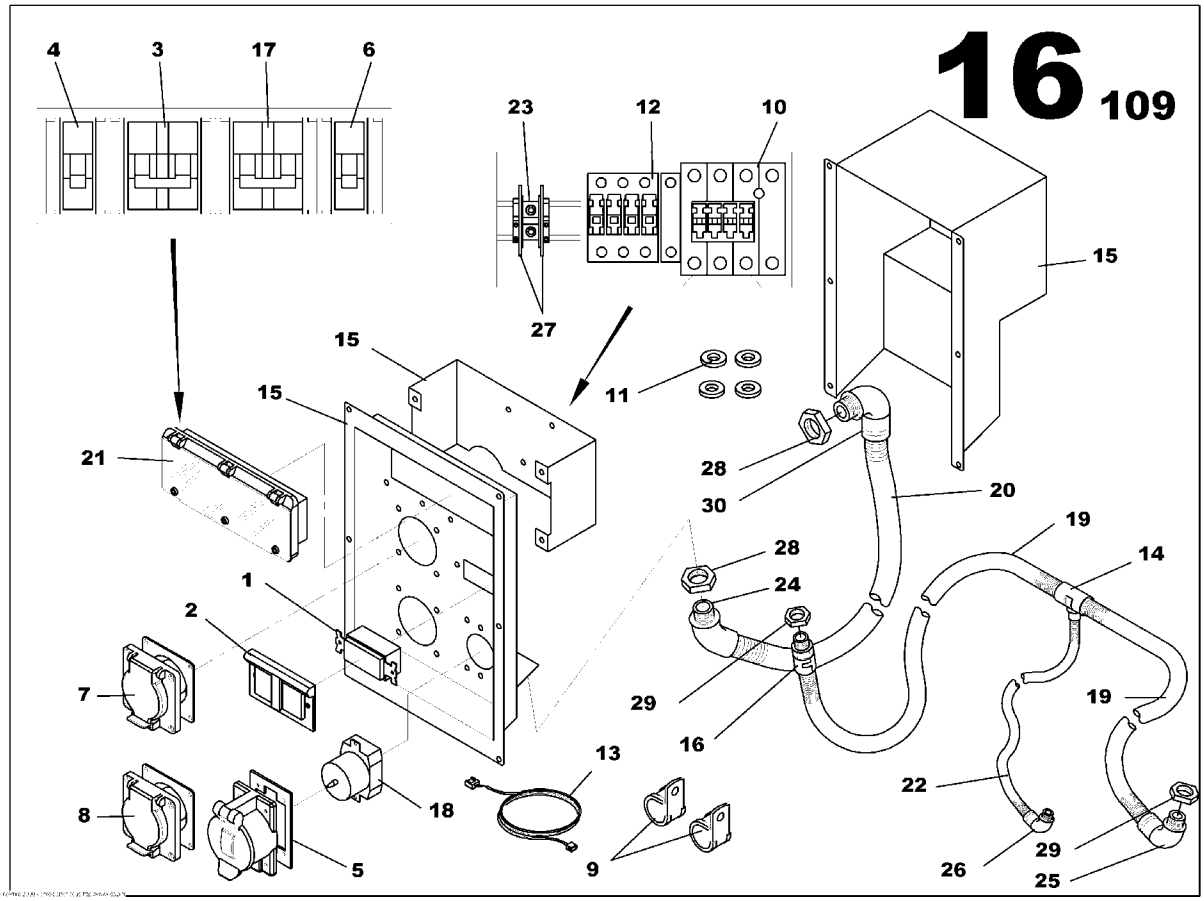

SOCKET PANEL M107 ASSEMBLY
85498947

Part numbers listed are only parts used in this model

Item	Part No.	Description	Qty	Un	From SN	To SN	Order PN	Page
1	17130675	SOCKET USA 125V 20A 2S+G	1	UN	03000069		17130675	
2	85426641	SOCKETS COVER	1	UN			85426641	
3	17130642	MOULDED CASE CIRCUIT BREAKER 2x32A	1	UN	03000069		17130642	
4	17130634	MOULDED CASE CIRCUIT BREAKER 1x32A	1	UN	03000069		17130634	
5	85408995	SOCKETS COVER	1	UN			85408995	
6	17130667	MOULDED CASE CIRCUIT BREAKER 1x20A	1	UN	03000069		17130667	
7	85426583	SOCKET USA 125V 30A 2S+G	1	UN			85426583	
8	85499721	SOCKET USA 250V 30A 3S+G	1	UN			85499721	
9	17130816	CLAMP D20	2	UN			17130816	
10	85426658	CONTACTOR 4NO	1	UN			85426658	
11	17130873	SPACER	4	UN			17130873	
12	85426666	CONTACTOR 2NO+2NC	1	UN			85426666	
13	85500346	WIRING LOOM CONNECTIONS BLOCK	1	UN			85500346	
14	85492114	T-PIECE 23*23*11	1	UN			85492114	
15	85498988	SOCKET ASSEMBLY	1	UN			85498988	117
16	17130600	PIPE UNION PG21	1	UN			17130600	
17	17130659	MOULDED CASE CIRCUIT BREAKER 2x50A	1	UN	03000069		17130659	
18	85408946	SOCKET USA 250V 50A 2S+G	1	UN			85408946	
19	85499291	ELECTRICAL SHAFT D23	1	ML			85499291	
19	85499291	ELECTRICAL SHAFT D23	0.5	ML			85499291	
20	85499440	ELECTRICAL SHAFT D36	0.8	ML			85499440	
21	85408284	CIRCUIT BREAKER SUPPORT PLATE 12 MODULES	1	UN			85408284	
22	85499283	ELECTRICAL SHAFT D10	0.9	ML			85499283	
23	85499606	TERMINAL BLOCK	2	UN			85499606	
24	85499697	PIPE UNION ELBOW 45° PG36	1	UN			85499697	
25	85500502	PIPE UNION ELBOW 90° PG21	1	UN			85500502	
26	85500494	PIPE UNION ELBOW 90° PG29	1	UN			85500494	
27	85408714	PHASE ISOLATOR	1	UN			85408714	

SOCKET PANEL M107 ASSEMBLY

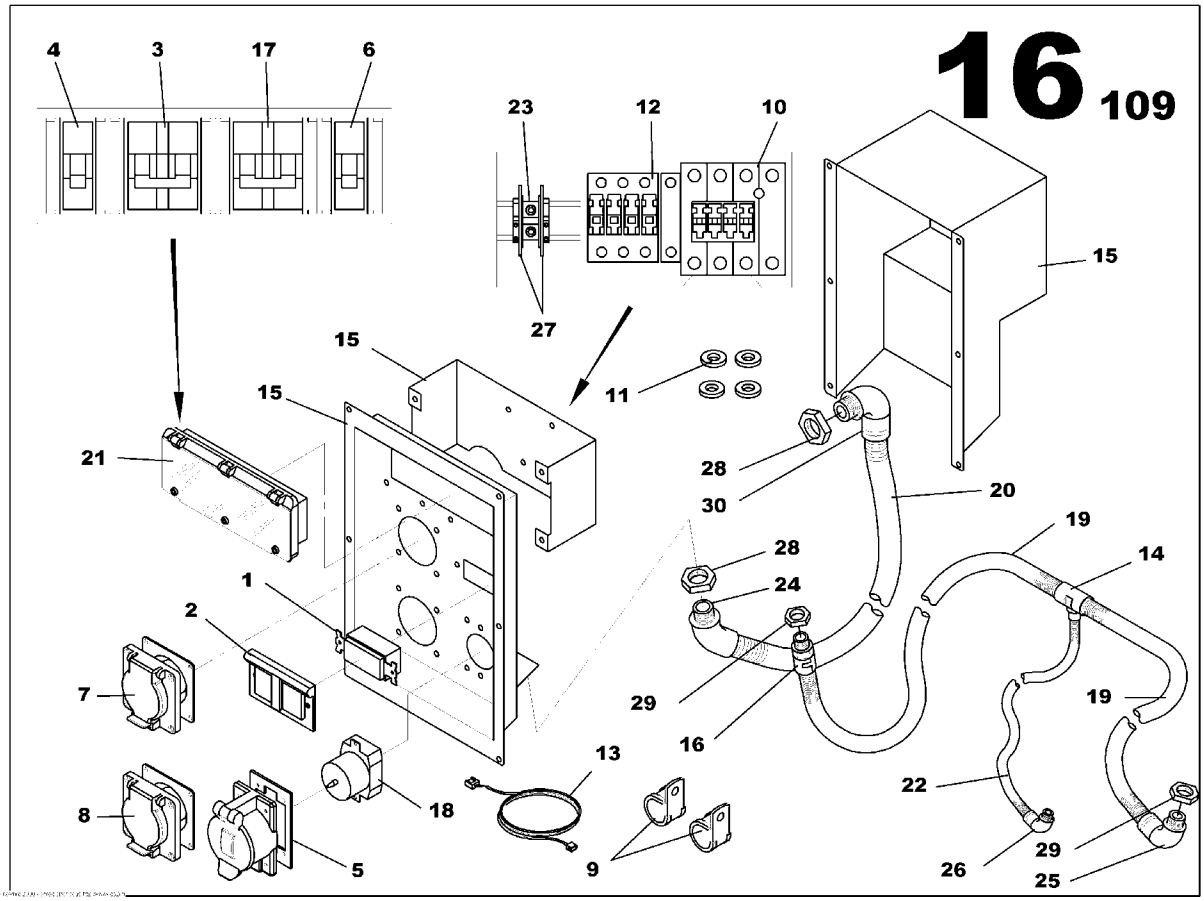

SOCKET PANEL M107 ASSEMBLY
85498947

Part numbers listed are only parts used in this model

Item	Part No.	Description	Qty	Un	From SN	To SN	Order PN	Page
28	85408680	GLAND NUT SCREW PG36	2	UN			85408680	
29	85408672	GLAND NUT SCREW PG21	2	UN			85408672	
30	85499689	PIPE UNION ELBOW 90° PG36	1	UN			85499689	

SOCKET ASSEMBLY

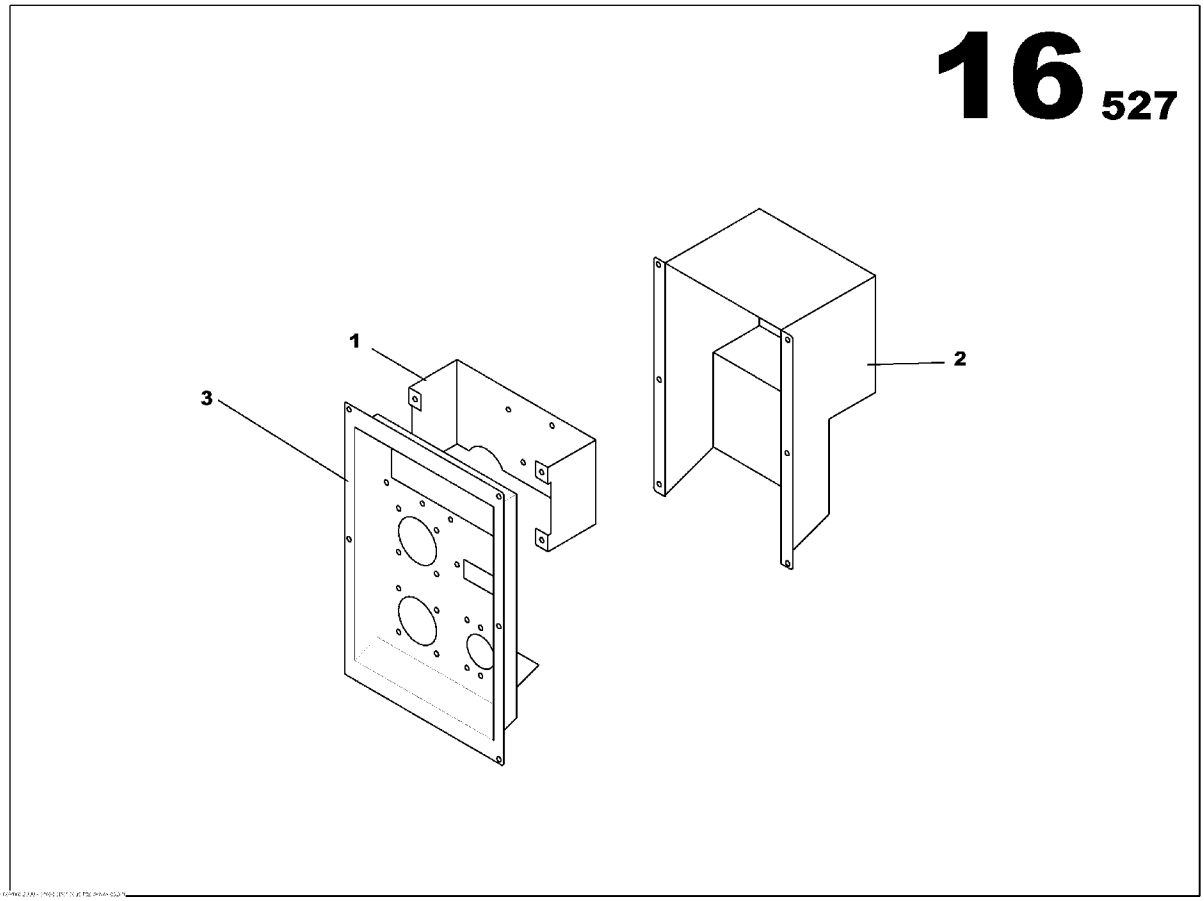

SOCKET ASSEMBLY
85498988

Part numbers listed are only parts used in this model

Item	Part No.	Description	Qty	Un	From SN	To SN	Order PN	Page
1	85499127	CONTACTOR BRACKET	1	UN			85499127	
2	85499135	ELECTRIC PANEL HOUSING US COVER M107	1	UN			85499135	
3	85499143	SOCKETS PANEL EC M107	1	UN			85499143	

TERMINAL M107 ASSEMBLY

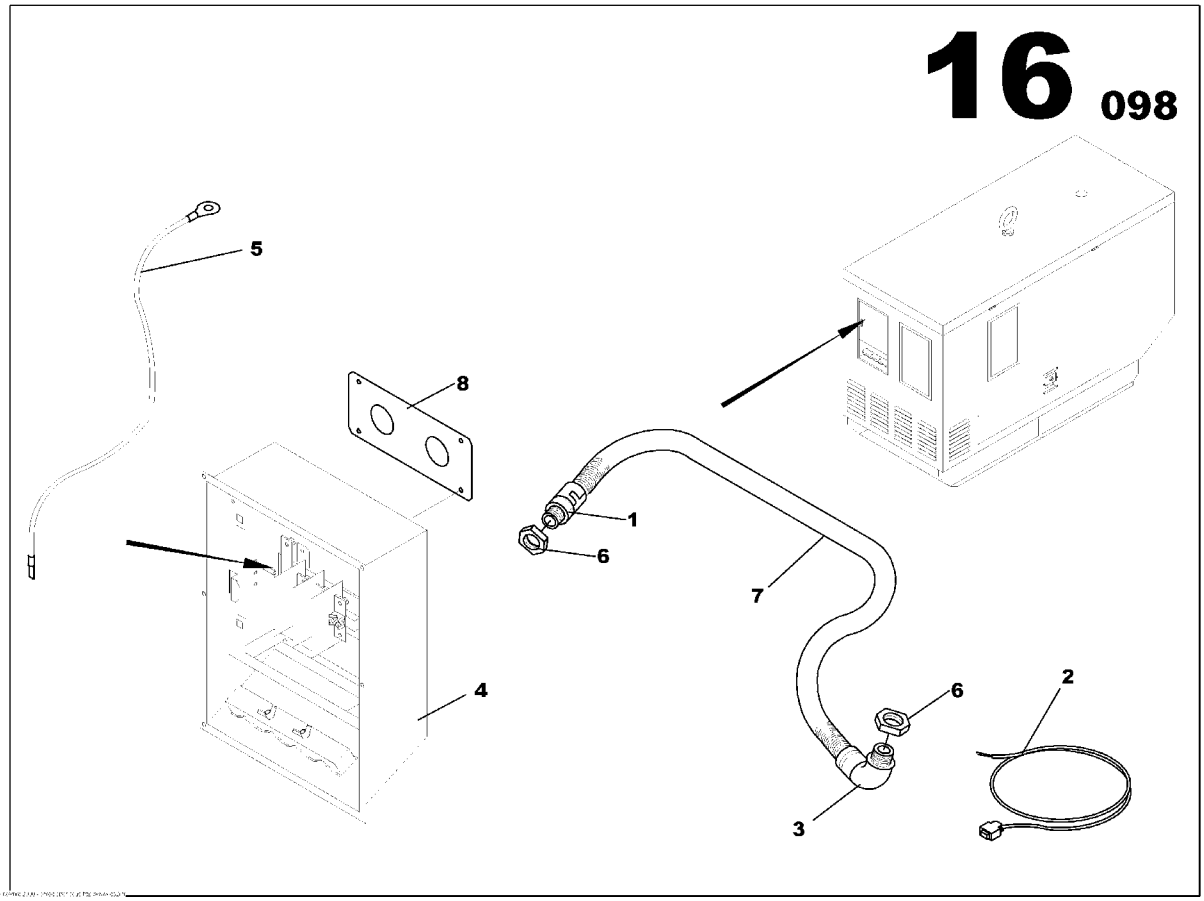

TERMINAL M107 ASSEMBLY
85498954

Part numbers listed are only parts used in this model

Item	Part No.	Description	Qty	Un	From SN	To SN	Order PN	Page
1	85501575	PIPE UNION PG36	1	UN			85501575	
2	85499184	WIRING LOOM CONNECTIONS BLOCK	1	UN			85499184	
3	85499689	PIPE UNION ELBOW 90° PG36	1	UN			85499689	
4	85498921	CONNECTION MCPS ASSEMBLY	1	UN			85498921	121
5	17131129	CABLE 1x35mm2	2	ML			17131129	
6	85408680	GLAND NUT SCREW PG36	2	UN			85408680	
7	85499440	ELECTRICAL SHAFT D36	1.1	ML			85499440	
8	85499150	GLAND NUT PLATE TERMINAL CONNECTION M107	1	UN			85499150	

CONNECTION MCPS ASSEMBLY

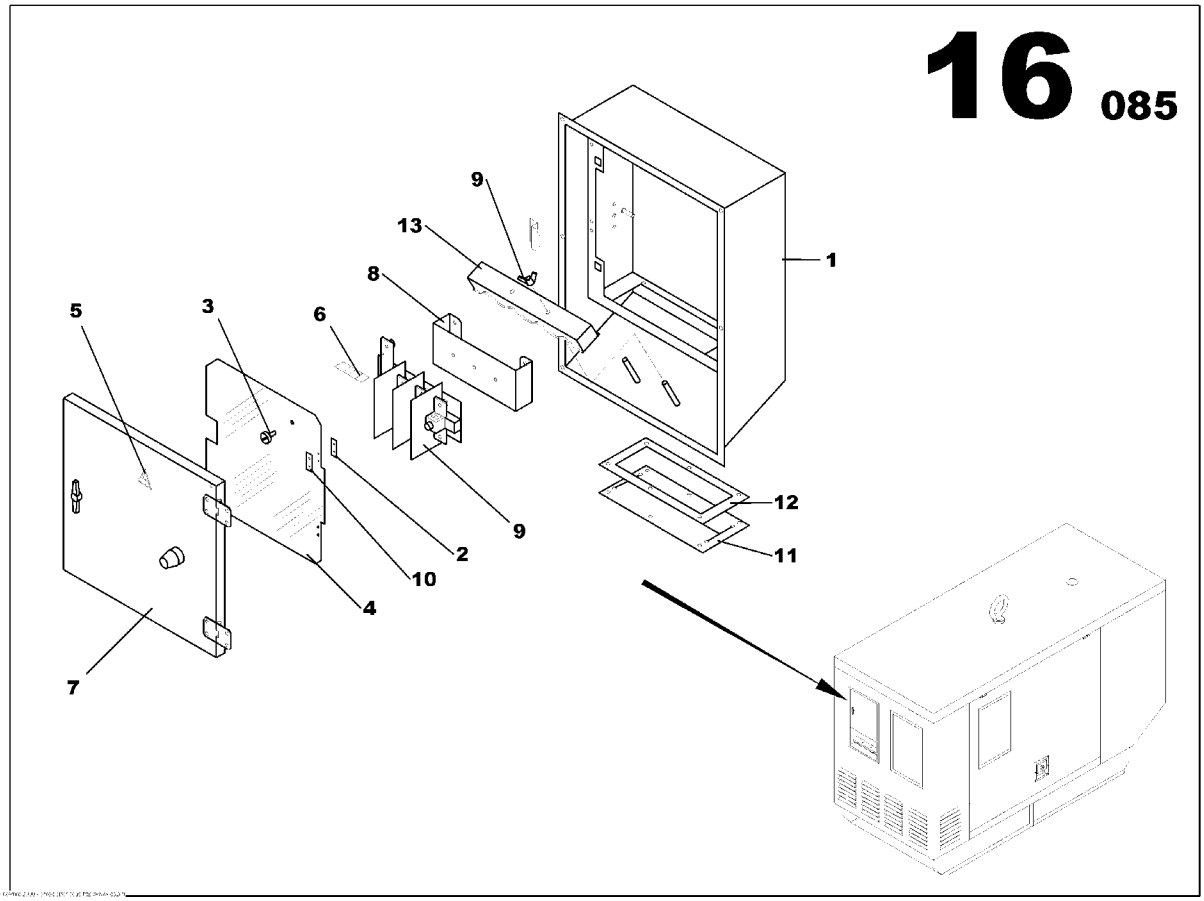

CONNECTION MCPS ASSEMBLY
85498921

Part numbers listed are only parts used in this model

Item	Part No.	Description	Qty	Un	From SN	To SN	Order PN	Page
1	85416048	MCPS BRACKET	1	UN			85416048	
2	85407708	HINGE FIXING PLATE M214	2	UN			85407708	
3	85409217	SLAM SHUT ASSEMBLY	1	UN			85409217	129
4	85415545	TERMINAL CONNECTION DOOR M107	1	UN			85415545	
5	85409084	STICKER EARTH SYMBOL	1	UN			85409084	
6	85499887	STICKER TERMINAL BLOCK	1	UN			85499887	
7	85414860	PANEL DOOR M107 ASSEMBLY	1	UN			85414860	123
8	85415933	TERMINAL BRACKET	1	UN			85415933	
9	85410140	WING NUT M8	2	UN			85410140	
10	85407690	DOOR SHIM ASSEMBLY	2	UN			85407690	
11	85412534	CABLE OUTPUT RUBBER SCREEN	1	UN			85412534	
12	85415982	WIRE BIB OUTPUT BRACKET	1	UN			85415982	
13	85416030	FUEL FILTER BRACKET	1	UN			85416030	

PANEL DOOR M107 ASSEMBLY

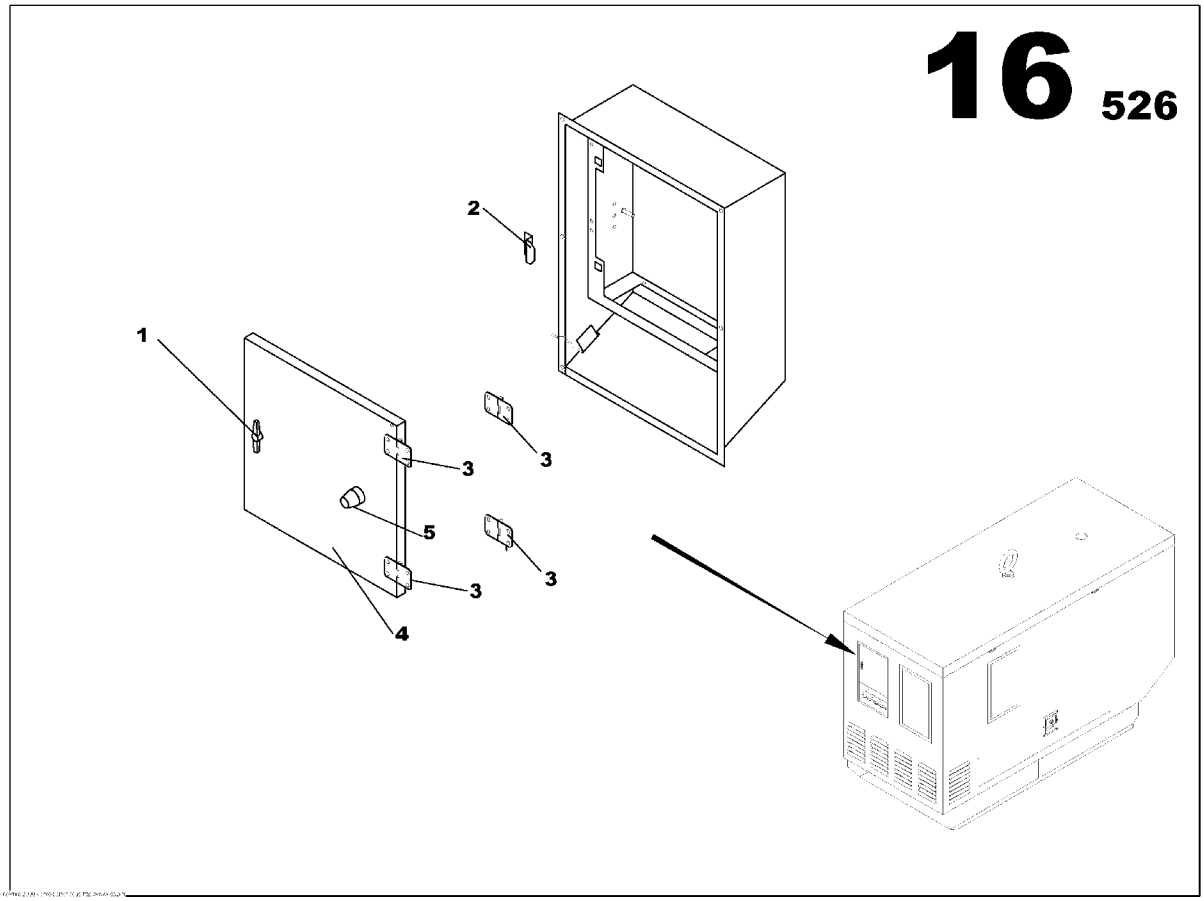

PANEL DOOR M107 ASSEMBLY
85414860

Part numbers listed are only parts used in this model

Item	Part No.	Description	Qty	Un	From SN	To SN	Order PN	Page
1	85402907	SLAM SHUT ASSEMBLY	1	UN			85402907	125
2	85407682	STRIKER PLATE CANOPY MCPS DOOR	1	UN			85407682	
3	85406130	DOOR HINGE	4	UN			85406130	
4	85415537	TERMINAL CONNECTION DOOR M107	1	UN			85415537	
5	85406189	ANTI-VIBRATION MOUNT 140daN 15mm	1	UN			85406189	

SLAM SHUT ASSEMBLY

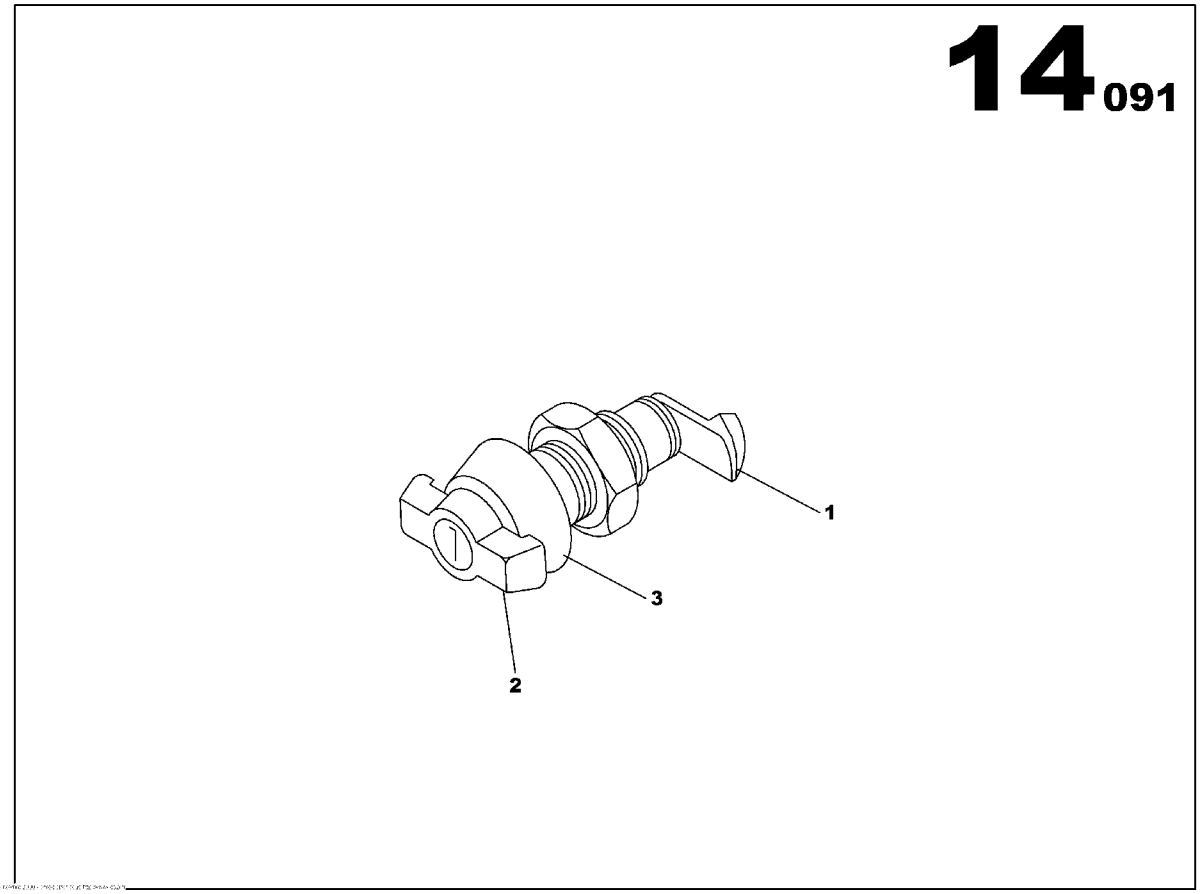

SLAM SHUT ASSEMBLY
85402907

Part numbers listed are only parts used in this model

Item	Part No.	Description	Qty	Un	From SN	To SN	Order PN	Page
1	85406221	SLAM SHUT DOOR LATCH	1	UN			85406221	
2	85406239	SLAM SHUT LATCH HANDLE	1	UN			85406239	127
3	85406247	SLAM SHUT FASTENER	1	UN			85406247	

SLAM SHUT LATCH HANDLE

Non illustré
Not illustrated

SLAM SHUT LATCH HANDLE
85406239

Part numbers listed are only parts used in this model

Item	Part No.	Description	Qty	Un	From SN	To SN	Order PN	Page
1	85632883	WBH LATCHE KEY	1	UN			85632883	

SLAM SHUT ASSEMBLY

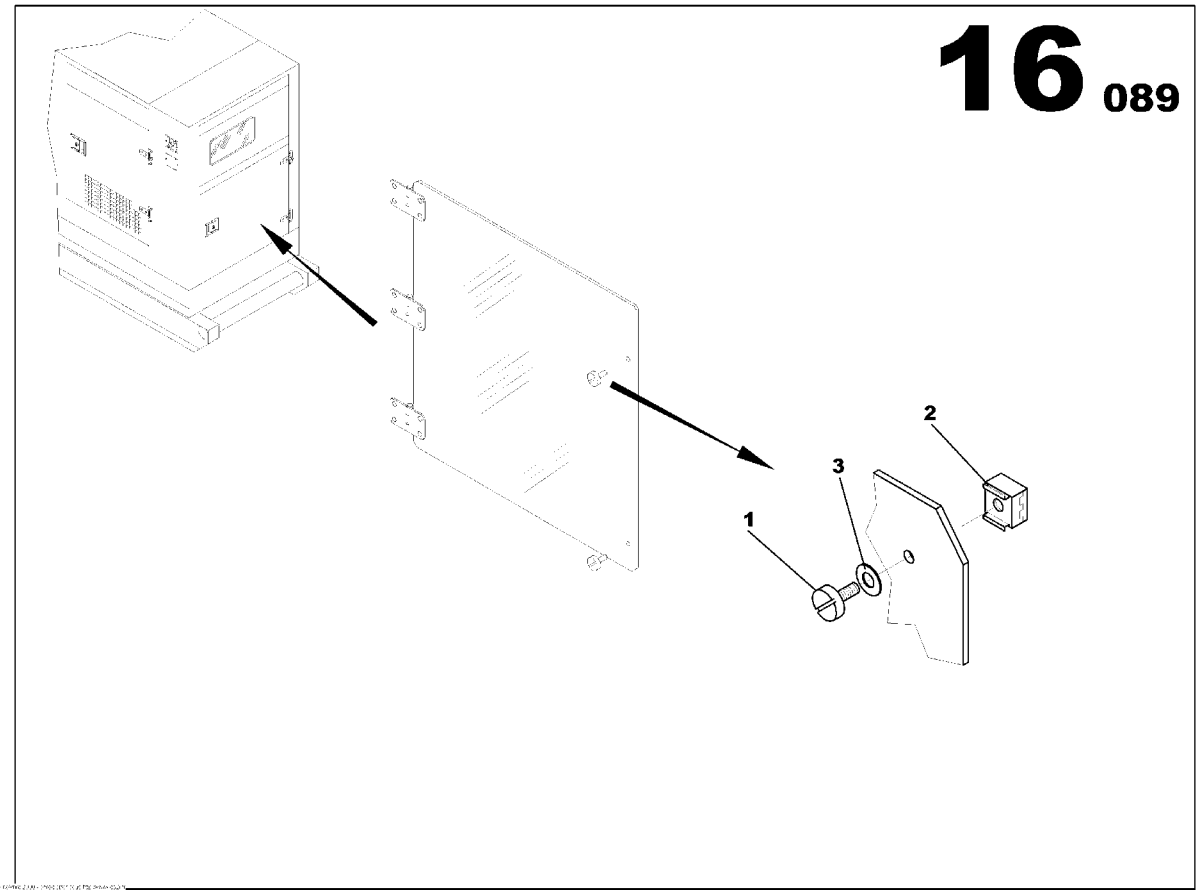

SLAM SHUT ASSEMBLY
85409217

Part numbers listed are only parts used in this model

Item	Part No.	Description	Qty	Un	From SN	To SN	Order PN	Page
1	85409225	1/4 TURN SCREW D9 *-Order 31801021601NE*	2	UN			85409225	
2	85409233	CAPTIVE NUT FOR 1/4 TURN BOLT *-Order 31801021601NE*	2	UN			85409233	
3	85409241	WASHER FOR 1/4 TURN FASTENER *-Order 31801021601NE*	2	UN			85409241	

OIL SUMP DRAIN PUMP KIT

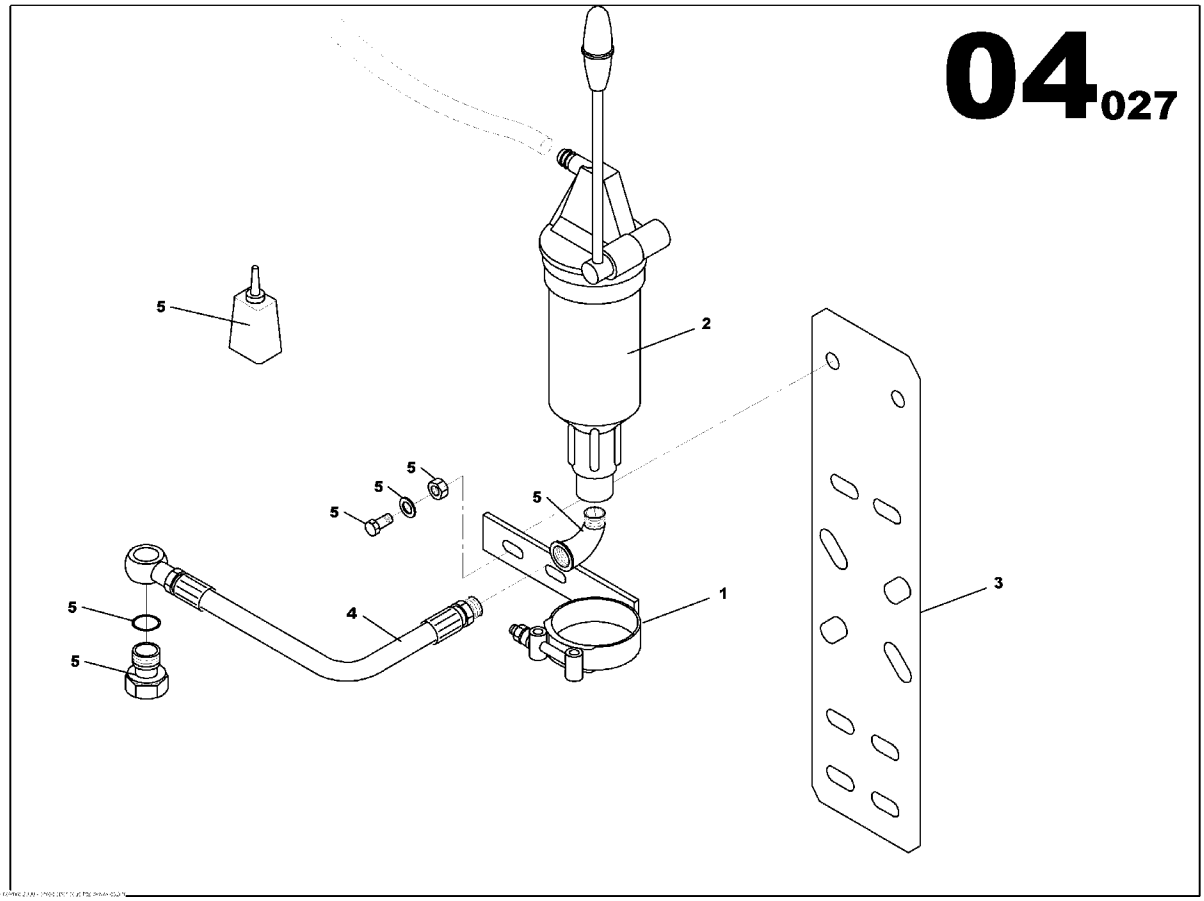

OIL SUMP DRAIN PUMP KIT
54602816

Part numbers listed are only parts used in this model

Item	Part No.	Description	Qty	Un	From SN	To SN	Order PN	Page
1	85403426	OIL SUMP PUMP BRACKET	1	UN			85403426	
2	85403434	MANUAL PUMP	1	UN			85403434	
3	85429165	FUEL FILTER SEPARATOR/3 WAY FUEL VALVE BRACKET	1	UN			85429165	
4	85413474	HOSE L450	1	UN			85413474	
5	85429702	SCREWS ASSEMBLY	1	UN			85429702	133

SCREWS ASSEMBLY

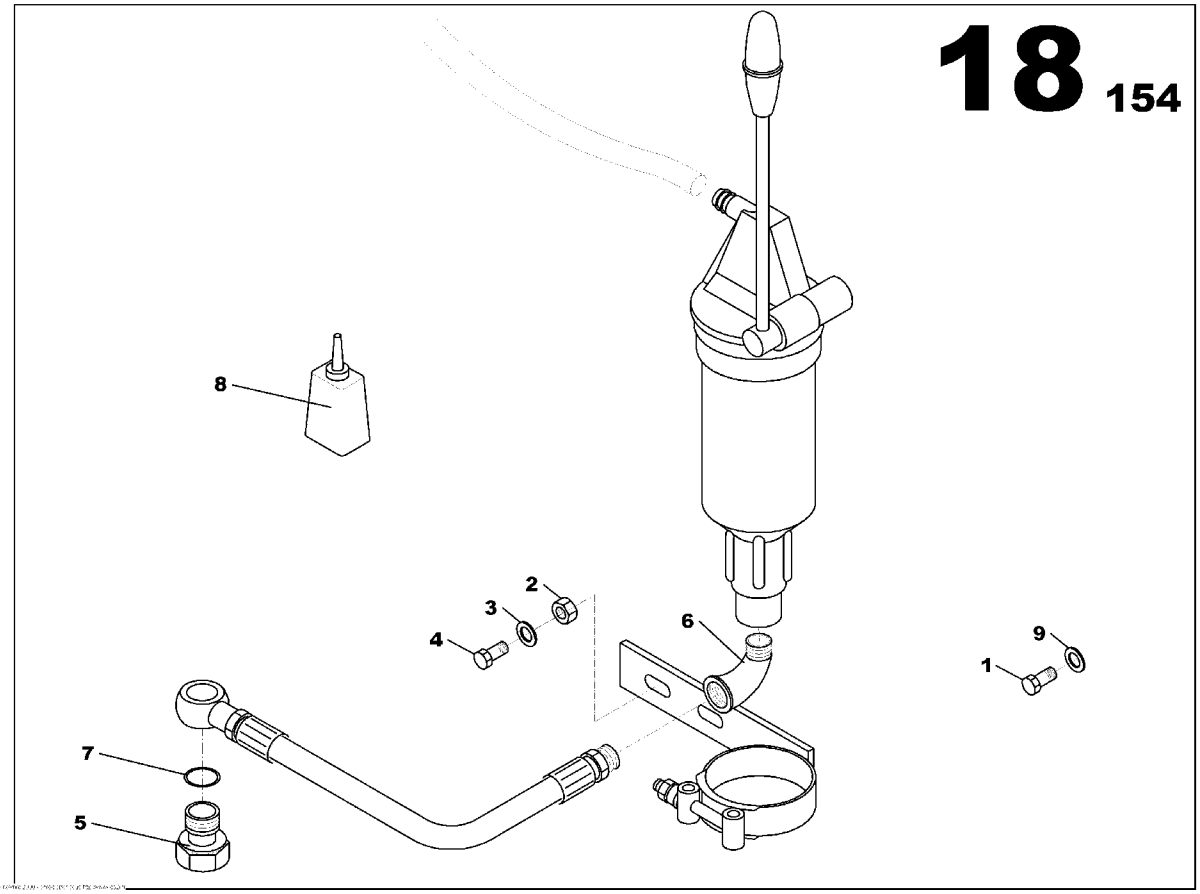

SCREWS ASSEMBLY
85429702

Part numbers listed are only parts used in this model

Item	Part No.	Description	Qty	Un	From SN	To SN	Order PN	Page
1	85409209	SCREW H M12x25	6	UN			85409209	
2	85429769	NUT M12	2	UN			85429769	
3	85429850	WASHER D12	2	UN			85429850	
4	85429926	SCREW H M12x25	2	UN			85429926	
5	85409282	BANJO SCREW M14X150 L26	1	UN			85409282	
6	85409308	PIPE UNION ELBOW 90° MAL/FEM 3/8G	1	UN			85409308	
7	85409522	GASKET D14x20	1	UN			85409522	
8	85430007	LOCTITE CAN	1	UN			85430007	
9	85430171	WASHER 12X27	6	UN			85430171	

3 WAY FUEL VALVE KIT

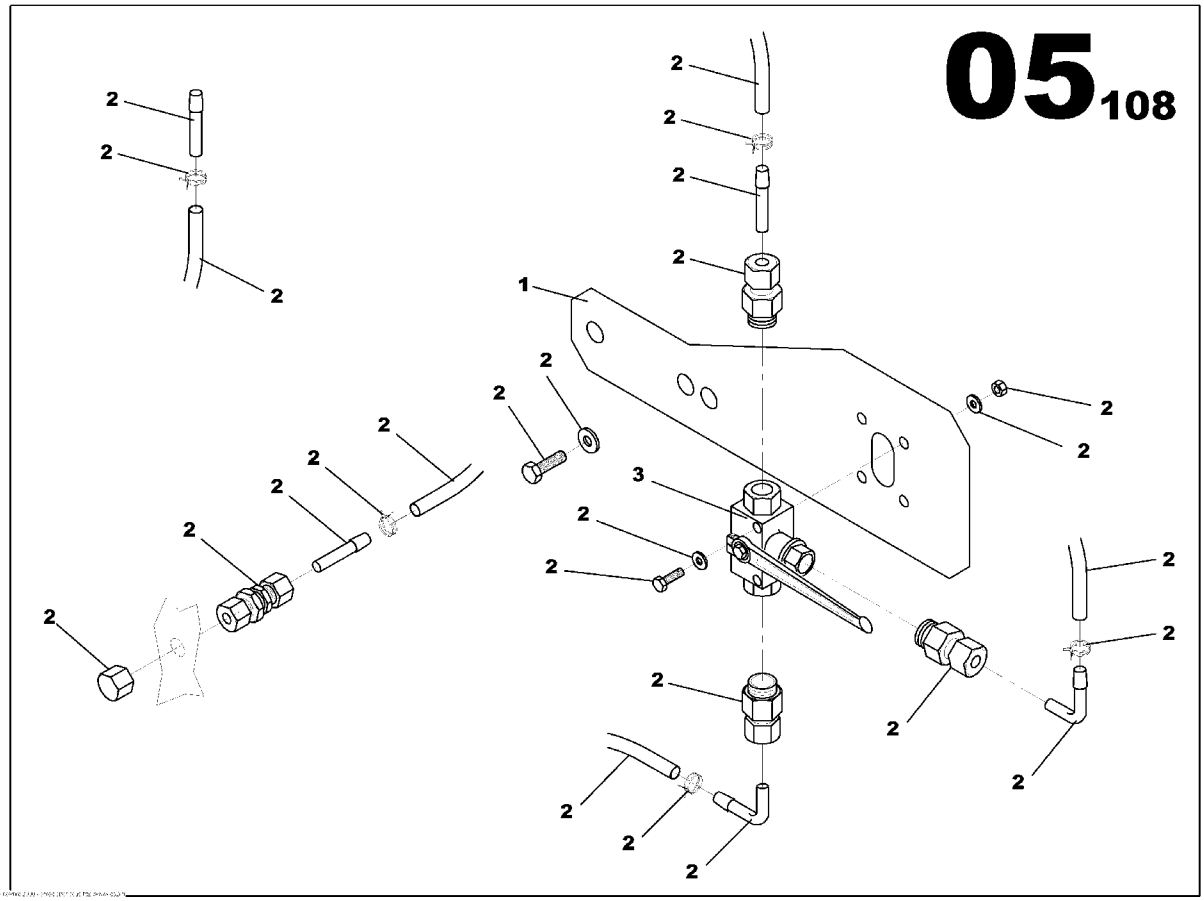

3 WAY FUEL VALVE KIT
17130147

Part numbers listed are only parts used in this model

Item	Part No.	Description	Qty	Un	From SN	To SN	Order PN	Page
1	85633295	3 WAY FUEL VALVE BRACKET	1	UN			85633295	
2	17130782	SCREWS ASSEMBLY	1	UN			17130782	137
3	85636488	3 WAY VALVE	1	UN			85636488	

SCREWS ASSEMBLY

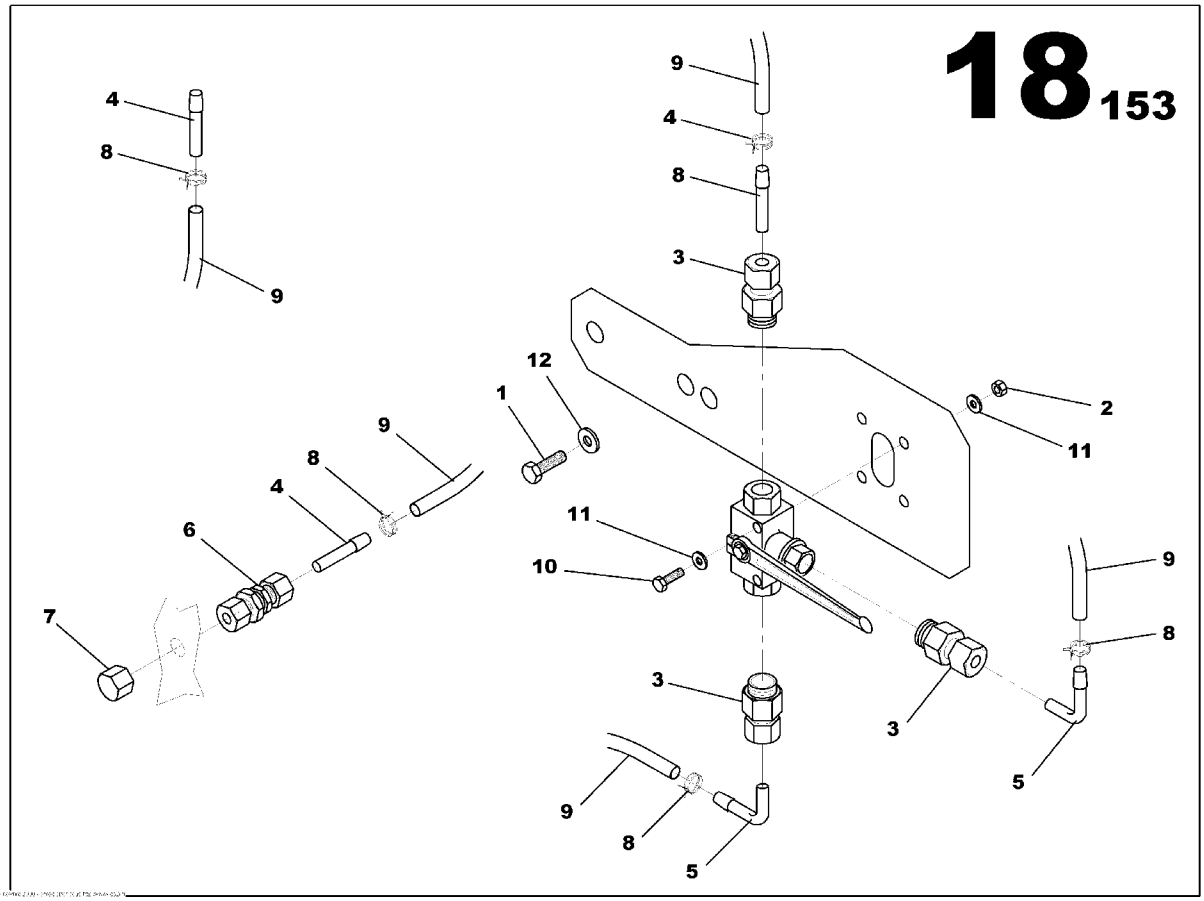

SCREWS ASSEMBLY
17130782

Part numbers listed are only parts used in this model

Item	Part No.	Description	Qty	Un	From SN	To SN	Order PN	Page
1	85409209	SCREW H M12x25	2	UN			85409209	
2	85429959	NUT M5	2	UN			85429959	
3	85409266	PIPE UNION REDUCER MAL/FEM 3/8G D8	3	UN			85409266	
4	85426377	PIPE UNION REDUCER MAL/MAL D8 D8	3	UN			85426377	
5	85409290	PIPE UNION ELBOW MAL/MAL D8	2	UN			85409290	
6	85409332	PIPE UNION FEM/FEM D8	1	UN			85409332	
7	85625010	PLUG D08	1	UN			85625010	
8	85621266	SPRING CLAMP D8.9/9.3	5	UN			85621266	
9	85416436	FLEXIBLE HOSE D8x14	3	ML			85416436	
10	85632206	SCREW H M5x45	2	UN			85632206	
11	85429967	WASHER 5x12	4	UN			85429967	
12	85430171	WASHER 12X27	2	UN			85430171	

FUEL PREFILTER KIT

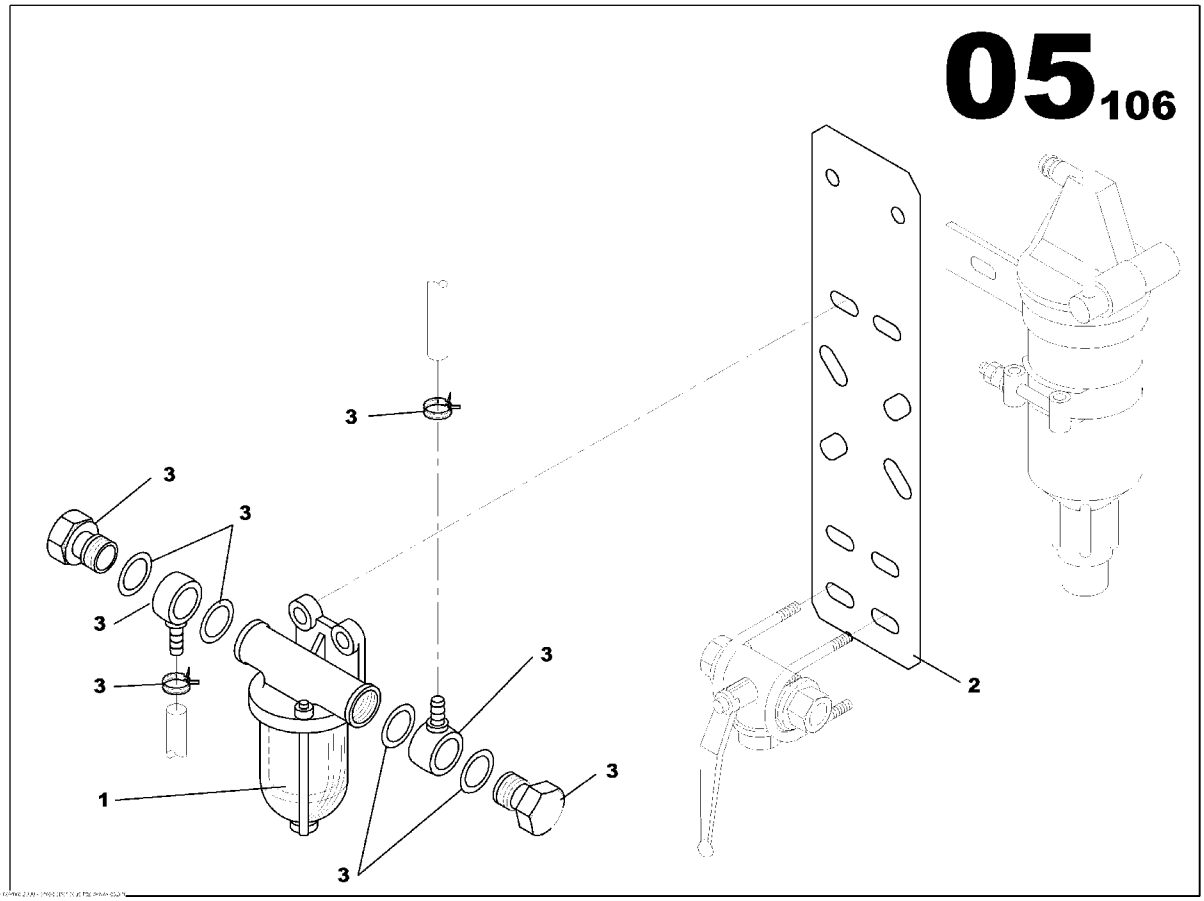

FUEL PREFILTER KIT
85507770

Part numbers listed are only parts used in this model

Item	Part No.	Description	Qty	Un	From SN	To SN	Order PN	Page
1	85403525	FUEL FILTER SEPARATOR	1	UN			85403525	
2	85429165	FUEL FILTER SEPARATOR/3 WAY FUEL VALVE BRACKET	1	UN			85429165	
3	85491058	SCREWS ASSEMBLY	1	UN			85491058	141

SCREWS ASSEMBLY

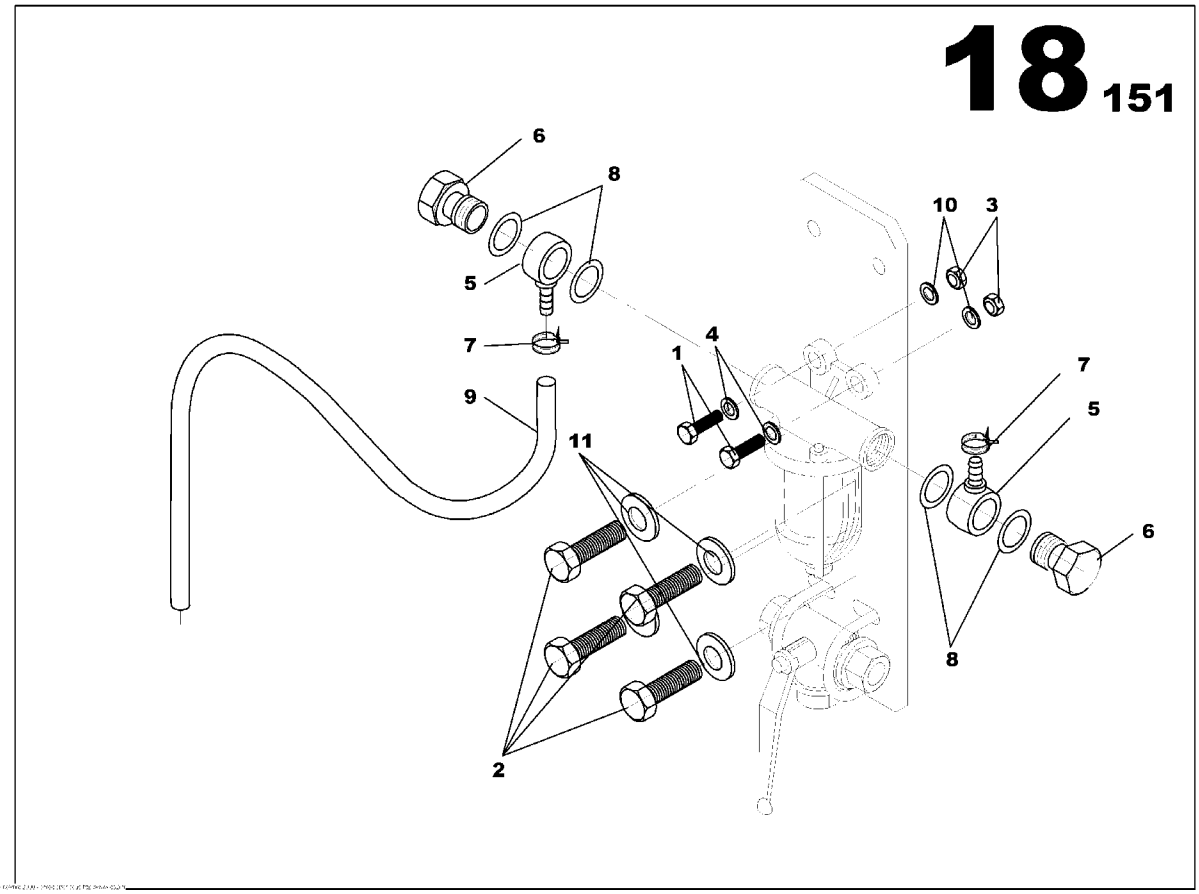

SCREWS ASSEMBLY
85491058

Part numbers listed are only parts used in this model

Item	Part No.	Description	Qty	Un	From SN	To SN	Order PN	Page
1	85429538	SCREW H M6x20	2	UN			85429538	
2	85409209	SCREW H M12x25	4	UN			85409209	
3	85507911	NUT M6	2	UN			85507911	
4	85507929	WASHER M6	2	UN			85507929	
5	85409274	BANJO CONNECTOR MALE D08	2	UN			85409274	
6	85409282	BANJO SCREW M14X150 L26	2	UN			85409282	
7	85409514	SPRING CLAMP D13/15	4	UN			85409514	
8	85409522	GASKET D14x20	4	UN			85409522	
9	85416436	FLEXIBLE HOSE D8x14	1.3	ML			85416436	
10	85429793	WASHER 6x14	2	UN			85429793	
11	85430171	WASHER 12X27	4	UN			85430171	

Index

Part number	Order number	Page
85496511	85496511	8
17130113	17130113	8
		6
85496537	85496537	34
85416204	85416204	42
85416212	85416212	42
85416220	85416220	42
85414852	85414852	38
85415438	85415438	42
85403426	85403426	132
85403434	85403434	132
54602816	54602816	2
85403517	85403517	50
85629541	85629541	48
85403525	85403525	140
85429165	85429165	140
85429165	85429165	132
85507770	85507770	2
85633295	85633295	136
17130121	17130121	48
17130147	17130147	2
17130154	17130154	48
85633386	85633386	76
17130162	17130162	46
		44
17130196	17130196	46
85403699	85403699	62
85403707	85403707	62
85403715	85403715	62
85412948	85412948	106

Part number	Order number	Page
85413268	85413268	106
85412872	85412872	106
85403723	85403723	62
85633410	85633410	62
17130246	17130246	60
		58
85412815	85412815	14
85414597	85414597	6
85413441	85413441	14
85412898	85412898	14
85404119	85404119	14
85425403	85425403	14
85414548	85414548	64
85414571	85414571	66
85413813	85413813	68
85413821	85413821	76
85633824	85633824	68
85417459	85417459	52
85496990	85496990	6
17130279	17130279	48
17130287	17130287	48
17130295	17130295	54
85416071	85416071	72
85416089	85416089	72
17130303	17130303	72
17130337	17130337	70
85401032	85401032	72
85400018	85400018	40
85400026	85400026	40
85415677	85415677	42

Part number	Order number	Page
85415685	85415685	42
85415693	85415693	42
85632859	85632859	40
17130360	17130360	72
17130386	17130386	72
85492700	85492700	86
17130394	17130394	72
85415354	85415354	86
85415362	85415362	86
85415347	85415347	86
85415370	85415370	86
85412484	85412484	86
85412492	85412492	86
85413516	85413516	86
85497410	85497410	86
85497428	85497428	86
85497436	85497436	86
85415313	85415313	86
85509594	85509594	86
85634194	85634194	84
85634202	85634202	82
85509560	85509560	86
85509578	85509578	86
85509586	85509586	86
85632990	85632990	66
85633048	85633048	86
85633055	85633055	86
85633063	85633063	86
85634319	85634319	86
85406130	85406130	86

Index

Part number	Order number	Page
85406130	85406130	124
85406189	85406189	124
85509305	85509305	86
85416477	85416477	86
85416501	85416501	86
85412831	85412831	86
85402907	85402907	86
85402907	85402907	124
85406221	85406221	90
85406221	85406221	126
85406239	85406239	126
85406239	85406239	90
85406247	85406247	90
85406247	85406247	126
85632883	85632883	92
85632883	85632883	128
85509263	85509263	76
85621142	85621142	86
85509859	85509859	86
85509842	85509842	88
85412633	85412633	62
85634376	85634376	62
85634384	85634384	62
85505543	85505543	102
85416030	85416030	122
85415982	85415982	122
85412534	85412534	122
85415933	85415933	122
85498756	85498756	102
85501435	85501435	32

Part number	Order number	Page
85491991	85491991	82
85416238	85416238	102
85413136	85413136	102
85413144	85413144	102
85413144	85413144	104
85498798	85498798	100
85407294	85407294	94
17130428	17130428	52
85498822	85498822	70
85415537	85415537	124
85498921	85498921	120
85414860	85414860	122
85407682	85407682	124
85407690	85407690	122
85407708	85407708	122
85505550	85505550	102
85498947	85498947	112
85416048	85416048	122
85415545	85415545	122
85498954	85498954	112
85498988	85498988	114
85499051	85499051	74
85499069	85499069	74
85499127	85499127	118
85499135	85499135	118
85499143	85499143	118
85499150	85499150	120
85499184	85499184	120
85499275	85499275	74
85634772	85634772	30

Part number	Order number	Page
17130436	17130436	100
85634939	85634939	88
85621191	85621191	88
85426674	85426674	74
85499283	85499283	114
85499291	85499291	114
85499291	85499291	114
85505584	85505584	102
85505576	85505576	102
85635266	85635266	24
85415966	85415966	24
85415974	85415974	24
85635282	85635282	20
85416279	85416279	24
85499440	85499440	120
85499440	85499440	114
85499440	85499440	102
85626950	85626950	22
85635696	85635696	24
85408284	85408284	114
85416519	85416519	106
85490472	85490472	106
85413482	85413482	106
85502235	85502235	62
85413490	85413490	106
85408425	85408425	100
85408466	85408466	100
85402527	85402527	106
85408664	85408664	102
85408672	85408672	116

Index

Part number	Order number	Page
85408680	85408680	120
85408680	85408680	116
85408680	85408680	102
85408714	85408714	114
85412609	85412609	106
85408797	85408797	100
85499606	85499606	114
85402477	85402477	106
85499622	85499622	100
85415388	85415388	102
85408854	85408854	106
85414209	85414209	24
85412955	85412955	106
85505600	85505600	100
85408888	85408888	24
85408896	85408896	24
85413292	85413292	24
85408912	85408912	24
85412971	85412971	106
85402576	85402576	106
85412930	85412930	106
85415503	85415503	106
85416527	85416527	106
85501575	85501575	32
85501575	85501575	120
85501575	85501575	102
85499689	85499689	120
85499689	85499689	116
85500494	85500494	114
85500502	85500502	114

Part number	Order number	Page
85499697	85499697	114
85415792	85415792	26
17130600	17130600	114
85408946	85408946	114
85408995	85408995	114
85508638	85508638	106
85426583	85426583	114
85499721	85499721	114
85426450	85426450	36
85426658	85426658	114
85426666	85426666	114
85426443	85426443	100
85426641	85426641	114
85635860	85635860	28
85635878	85635878	24
85505659	85505659	110
17130634	17130634	114
17130642	17130642	114
17130659	17130659	114
17130667	17130667	114
17130675	17130675	114
85631422	85631422	108
85632362	85632362	108
85632370	85632370	106
85414985	85414985	100
85499796	85499796	98
85499812	85499812	100
85413474	85413474	132
85409084	85409084	122
85429538	85429538	142

Part number	Order number	Page
85409209	85409209	134
85409209	85409209	138
85409209	85409209	142
85429959	85429959	138
85507911	85507911	142
85429769	85429769	134
85429850	85429850	134
85507929	85507929	142
85429926	85429926	134
85409217	85409217	122
85409225	85409225	130
85409233	85409233	130
85409241	85409241	130
85429702	85429702	132
85491058	85491058	140
17130782	17130782	136
85509222	85509222	50
85409266	85409266	138
85415719	85415719	18
85409274	85409274	142
85409282	85409282	134
85409282	85409282	142
85409282	85409282	18
85426377	85426377	138
85409290	85409290	138
85409308	85409308	134
85412575	85412575	18
85409332	85409332	138
85415743	85415743	18
85625010	85625010	138

Index

Part number	Order number	Page
85429421	85429421	68
85412914	85412914	18
85412922	85412922	14
85409399	85409399	16
85409407	85409407	14
85417772	85417772	52
17130816	17130816	114
17130816	17130816	56
85621266	85621266	138
17130824	17130824	56
85409514	85409514	142
85409514	85409514	18
85490811	85490811	54
85409522	85409522	134
85409522	85409522	142
85409522	85409522	18
85413722	85413722	88
85416451	85416451	18
85636488	85636488	136
85416436	85416436	142
85416436	85416436	138
85416436	85416436	18
85416436	85416436	56
85416444	85416444	18
85414696	85414696	6
85425411	85425411	14
85505634	85505634	110
85413797	85413797	110
85499887	85499887	122
85499929	85499929	70

Part number	Order number	Page
85500023	85500023	76
85500197	85500197	80
85500221	85500221	80
54605027	54605027	78
54568787	54568787	78
54604996	54604996	78
54627773	54627773	78
54605001	54605001	78
54568779	54568779	78
54625207	54625207	78
54568753	54568753	78
54568761	54568761	78
54605019	54605019	78
54640024	54640024	78
54640008	54640008	78
85502490	85502490	76
17130840	17130840	76
85636553	85636553	76
17130865	17130865	76
17130873	17130873	114
85430007	85430007	134
85632016	85632016	88
85400133	85400133	12
85400133	85400133	10
85400216	85400216	10
85400216	85400216	12
85400240	85400240	10
85400240	85400240	12
85400257	85400257	10
85400257	85400257	12

Part number	Order number	Page
85400265	85400265	10
85400265	85400265	12
85400273	85400273	10
85400273	85400273	12
85400281	85400281	10
85400281	85400281	12
85400505	85400505	10
85400505	85400505	12
85400513	85400513	10
85400513	85400513	12
85400570	85400570	12
85400570	85400570	10
85400620	85400620	12
85400620	85400620	10
85400638	85400638	12
85400638	85400638	10
85400067	85400067	12
85400067	85400067	10
85400604	85628022	12
85400604	85628022	10
85621530	85621530	12
85621530	85621530	10
85508182	85508182	12
85508182	85508182	10
85402451	85402451	36
85425858	85425858	36
85425866	85425866	36
85425882	85425882	36
85425965	85425965	36
85508760	85508760	36

Index

Part number	Order number	Page
85508851	85508851	36
85508893	85508893	36
85508943	85508943	36
85508992	85508992	36
85509032	85509032	36
85509073	85509073	36
85400679	85400679	16
85400703	85400703	16
85501252	85501252	16
85501336	85501336	16
85402519	85402519	106
85505592	85505592	102
85505691	85505691	106
85505683	85505683	106
85505675	85505675	100
85505667	85505667	100
85505568	85505568	102
85500346	85500346	114
17131129	17131129	120
85500379	85500379	106
85413508	85413508	106
85492114	85492114	114
85636702	85636702	28
85632206	85632206	138
85410140	85410140	122
85429967	85429967	138
85429793	85429793	142
85430171	85430171	142
85430171	85430171	138
85430171	85430171	134

Part number	Order number	Page	Part number	Order number	Page