INGERSOLL-RAND

G270

PARTS MANUAL

17135625

Doosan purchased Bobcat Company from Ingersoll-Rand Company in 2007. Any reference to Ingersoll-Rand Company or use of trademarks, service marks, logos, or other proprietary identifying marks belonging to Ingersoll-Rand Company in this manual is historical or nominative in nature, and is not meant to suggest a current affiliation between Ingersoll-Rand Company and Doosan Company or the products of either.

G270 EDITION:05/08/2004

33519017701_0_1

Revised (01-13)

AFTERMARKET - 50 Hertz Generators

For more information on how to order parts or information regarding your local distributor (Europe, Middle East, Africa) please contact:

Facility Details **Coordonnées du Site** **Unternehmensdetails** **Dirección**	Ingersoll-Rand European Sales Ltd Portable Power Paragon Business Park Chorley New Road, Horwich Bolton BL6 6JN United Kingdom
Telephone **Téléphone** **Telefon** **Teléfono**	+44 (0) 1204 690 690
Fax	+44 (0) 1204 690 366
Emergency order phone **Numéro d'urgence pour commandes** **Dringende Aufträge, Telefon** **Teléfono de pedidos de urgencia**	+44 (0) 777 6170921
Office hours **Heures d'ouverture** **Bürostunden** **Horas de oficina**	Mon-Fri 8:00am to 4:30pm (GMT)

Telephone contact directory
Numéros des contacts
Telefonkontaktverzeichnis
Teléfonos de contacto

Harry Dale Aftermarket Marketing Manager	+44 (0) 1204 690 541
Malcolm Stott Marketing Analyst	+44 (0) 1204 690 396
Ian Parr Parts Co-ordinator	+44 (0) 1204 690 465
Howard Connolly Parts Co-ordinator	+44 (0) 1204 690 641
Martin James Parts Co-ordinator MEA	+44 (0) 1204 690 329

Imprimé avec FinePrint 2000 - enregistrer sous http://www.gs2.fr

G270

G270

Part numbers listed are only parts used in this model

Item	Part No.	Description	Qty	Un	From SN	To SN	Order PN	Page
1		G270	1	UN				3
2		AUTO START OPTION	1	UN				215
3		3 WAYS FUEL VALVES OPTION	1	UN				231
4		REINFORCED INSULATION OPTION	1	UN				237
5		EXPLOSIVE ATHMOSPHERE OPTION	1	UN				241

G270

G270

Part numbers listed are only parts used in this model

Item	Part No.	Description	Qty	Un	From SN	To SN	Order PN	Page
1		ENGINE FUNCTION	1	UN				5
2		ALTERNATOR FUNCTION	1	UN				41
3		COOLER FUNCTION	1	UN				55
4		FUEL FUNCTION	1	UN				65
5		STARTING FUNCTION	1	UN				83
6		EXHAUST FUNCTION	1	UN				89
7		FRAME FUNCTION	1	UN				93
8		CANOPY FUNCTIO	1	UN				107
9		ELECTRICAL FUNCTION	1	UN				133
10		DOCUMENTATION OPTION	1	UN				213

ENGINE FUNCTION

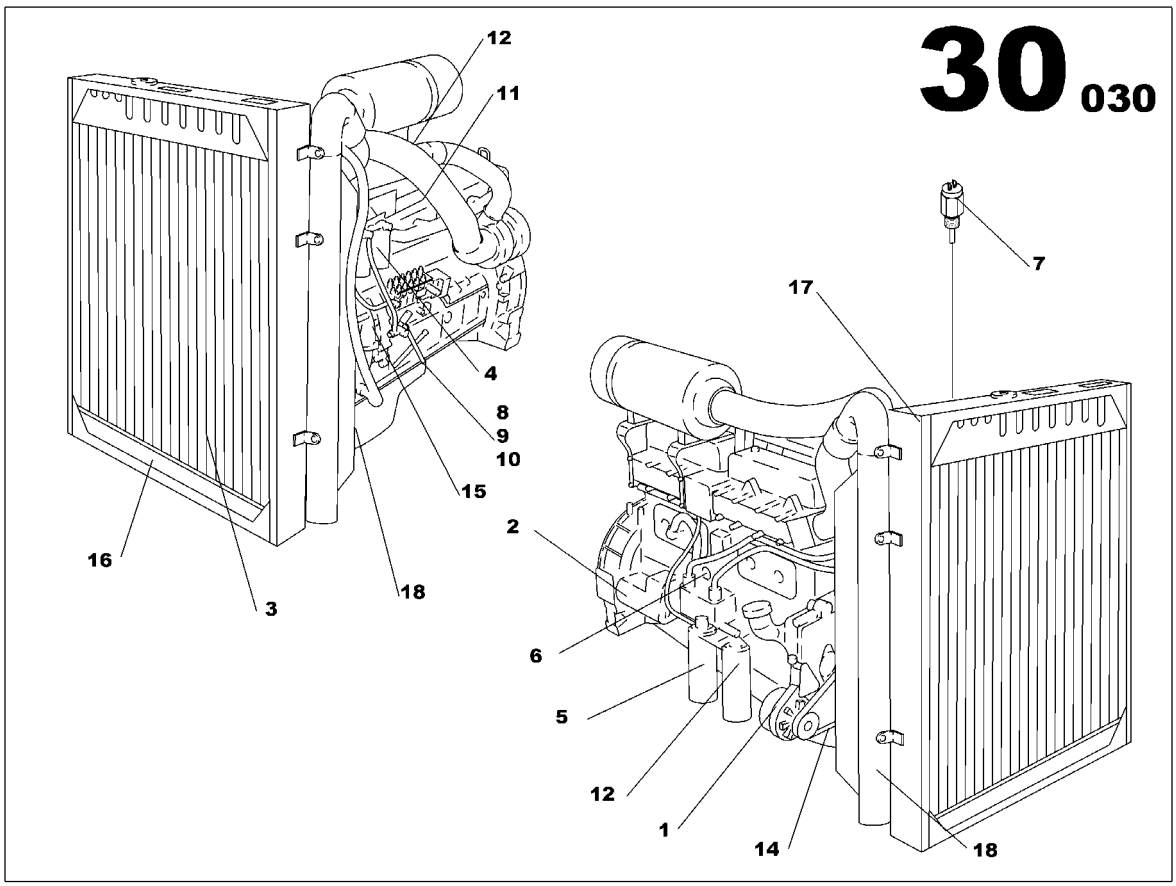

ENGINE FUNCTION

Part numbers listed are only parts used in this model

Item	Part No.	Description	Qty	Un	From SN	To SN	Order PN	Page
1	85422020	ENGINE VOLVO TAD740 SAE 2/11.5	1	UN			85422020	7
2	85509768	OIL SUMP DRAIN PUMP ASSEMBLY	1	UN			85509768	9
3	85419547	AIR FILTER HEAVY DUTY ASSEMBLY	1	UN			85419547	13
4	85427953	AIR HEATER ASSEMBLY	1	UN			85427953	
5	85427391	TRANS. WATER TEMPERATURE-OIL PRESSURE ASSEMBLY *-Provided with the Engine*	1	UN			85427391	
6		SPEED CONTROL FUNCTION	1	UN				17
7		ENGINE WIRING FUNCTION	1	UN				31

ENGINE VOLVO TAD740 SAE 2/11.5

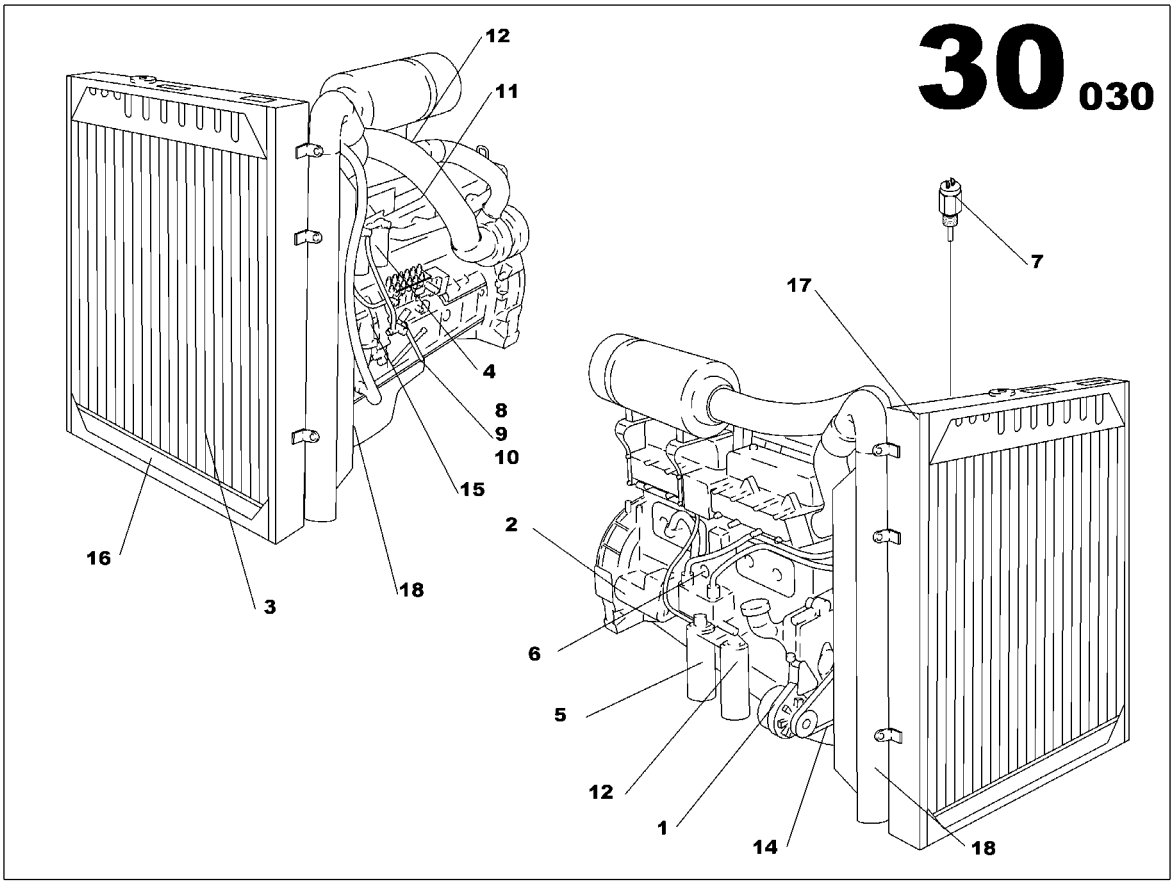

ENGINE VOLVO TAD740 SAE 2/11.5
85422020

Part numbers listed are only parts used in this model

Item	Part No.	Description	Qty	Un	From SN	To SN	Order PN	Page
1	85401404	ALTERNATOR	1	UN			85401404	
2	17141409	ELECTRICAL STARTER 24V	1	UN			17141409	
3	85620813	FAN BELT *Engine serial Number 271145378 -->-*	1	UN			85620813	
3	85401610	FAN BELT *Engine serial Number --> 271145377-*	1	UN			85401610	
4	85401628	FUEL FILTER	2	UN			85401628	
5	85401909	LUBE OIL FILTER	1	UN			85401909	
6	85401990	MANOCONTACT	1	UN			85401990	
7	85402147	THERMOCONTACT	1	UN			85402147	
8	17141391	THERMOSTAT	1	UN			17141391	
9	85402170	GASKET - THERMOSTAT	1	UN			85402170	
10	85402196	O RING	1	UN			85402196	
11	85425502	INJECTOR	6	UN			85425502	
12	85401917	OIL BY-PASS FILTER	1	UN			85401917	
13	85502797	ROCKER COVER GASKET	2	UN			85502797	
14	85502771	ALTERNATOR BELT	1	UN			85502771	
15	85426161	WATER PUMP REPAIR KIT	1	UN			85426161	
16	85425825	RADIATOR	1	UN			85425825	
17	85425734	RADIATOR HOSE	1	UN			85425734	
18	85425742	RADIATOR HOSE	1	UN			85425742	
19	17141383	RADIATOR	1	UN			17141383	

OIL SUMP DRAIN PUMP ASSEMBLY

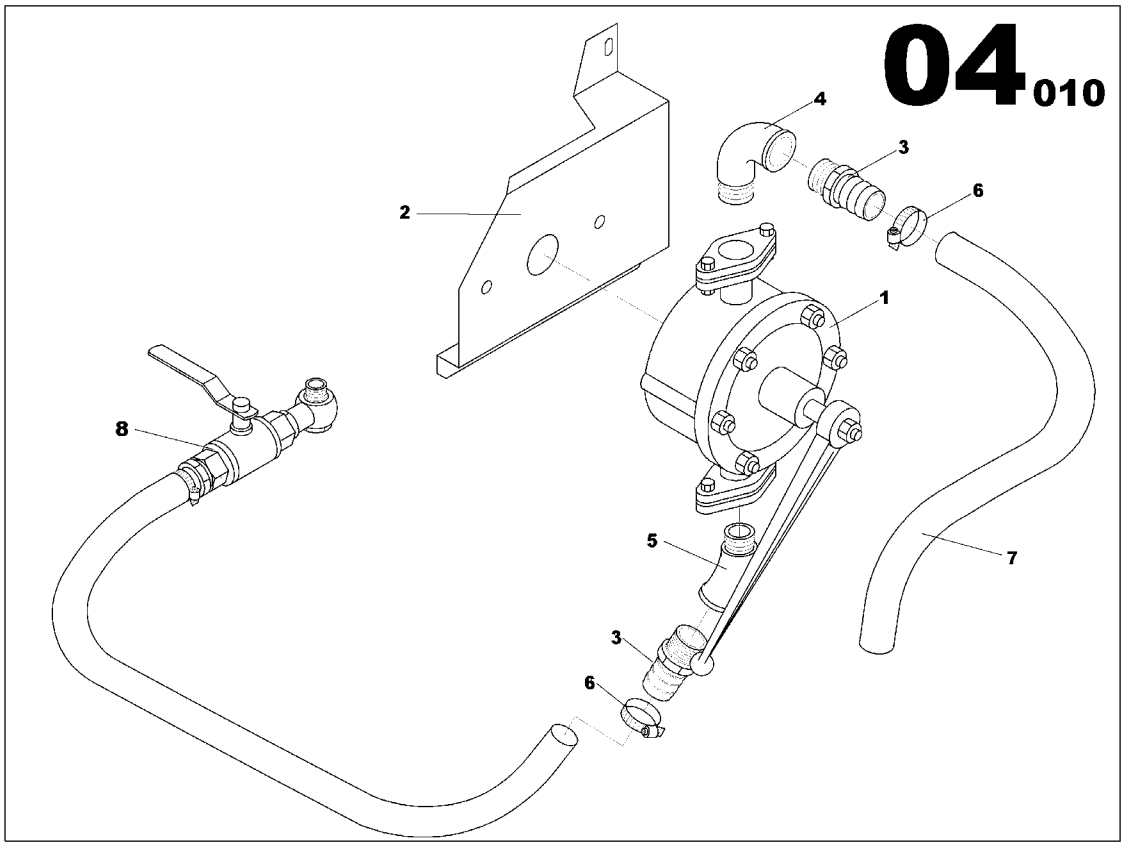

OIL SUMP DRAIN PUMP ASSEMBLY
85509768

Part numbers listed are only parts used in this model

Item	Part No.	Description	Qty	Un	From SN	To SN	Order PN	Page
1	85422616	HYDRAULIC MANUAL PUMP	1	UN			85422616	
2	85424034	OIL SUMP PUMP BRACKET VO TAD740	1	UN			85424034	
3	85622967	PIPE UNION MAL/MAL 3/4G	2	UN			85622967	
4	85423093	PIPE UNION ELBOW 90° MAL/FEM 3/4G	1	UN			85423093	
5	85423044	PIPE UNION ELBOW 45° MAL/FEM 3/4G	1	UN			85423044	
6	85409423	HOSE CLIP D20/32	2	UN			85409423	
7	85629392	FLEXIBLE HOSE D25x31	0.6	ML			85629392	
8	85421154	OIL SUMP DRAIN TAP ASSEMBLY	1	UN			85421154	11

OIL SUMP DRAIN TAP ASSEMBLY

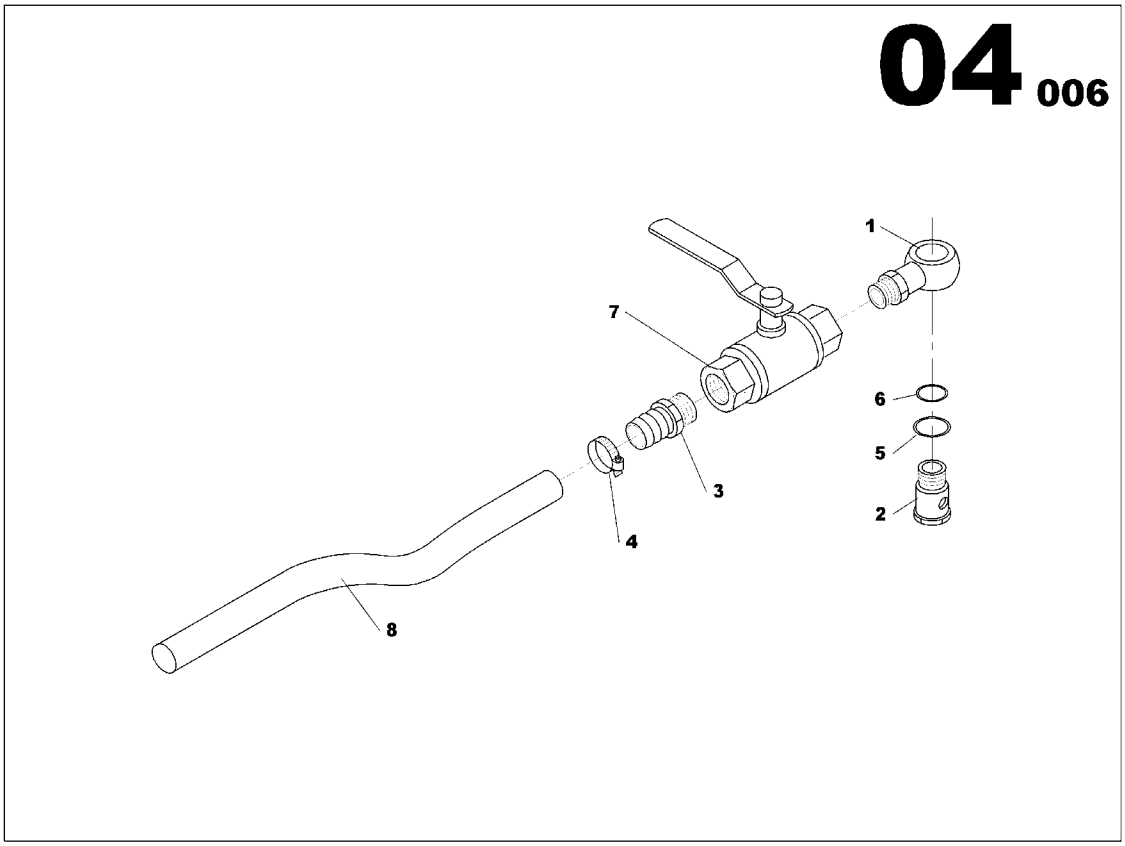

OIL SUMP DRAIN TAP ASSEMBLY
85421154

Part numbers listed are only parts used in this model

Item	Part No.	Description	Qty	Un	From SN	To SN	Order PN	Page
1	85423119	PIPE UNION BANJO D25.3 - 3/4G	1	UN			85423119	
2	85424893	BANJO SCREW	1	UN			85424893	
3	85622967	PIPE UNION MAL/MAL 3/4G	1	UN			85622967	
4	85409423	HOSE CLIP D20/32	1	UN			85409423	
5	85421758	GASKET D26x32	1	UN			85421758	
6	85421733	GASKET D22x29	1	UN			85421733	
7	85424885	2 WAYS VALVE	1	UN			85424885	
8	85629392	FLEXIBLE HOSE D25x31	1.5	ML			85629392	

AIR FILTER HEAVY DUTY ASSEMBLY

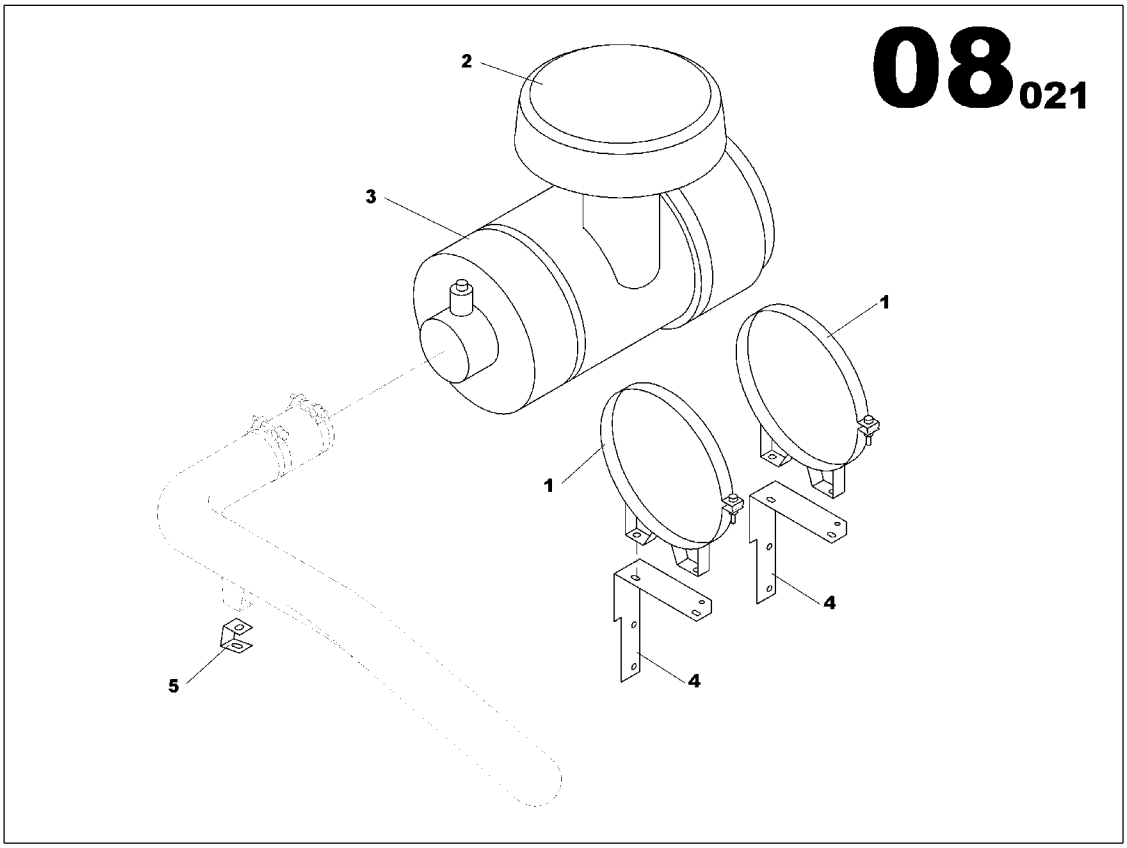

AIR FILTER HEAVY DUTY ASSEMBLY
85419547

Part numbers listed are only parts used in this model

Item	Part No.	Description	Qty	Un	From SN	To SN	Order PN	Page
1	85403848	AIR CLEANER CLAMP D330	2	UN			85403848	
2	85403863	RAIN CAP	1	UN			85403863	
3	85403921	AIR FILTER HEAVY DUTY	1	UN			85403921	15
4	85423887	AIR FILTER BRACKET	2	UN			85423887	
5	85424257	EXHAUST TUBE SUPPORT	1	UN			85424257	

AIR FILTER HEAVY DUTY

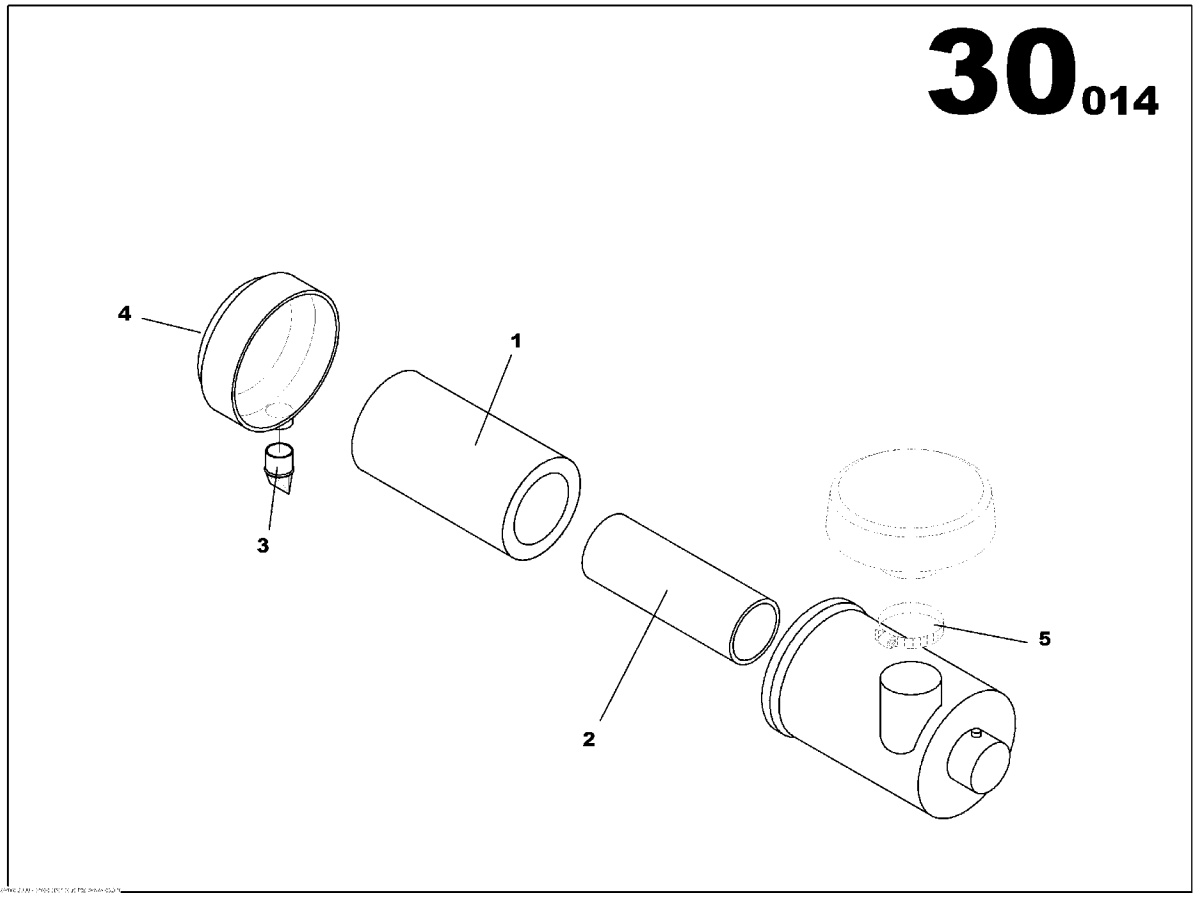

ELECTRONIC REGULATION ASSEMBLY

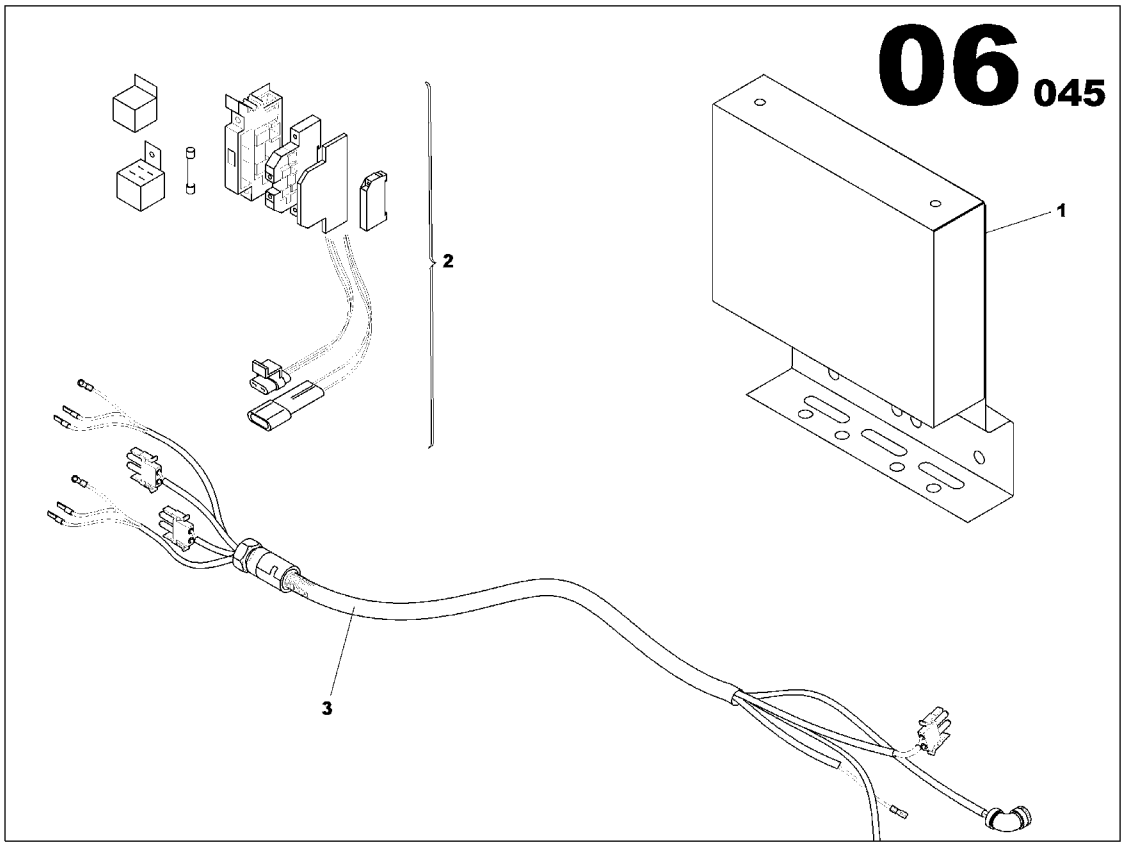

SPEED CONTROL FUNCTION

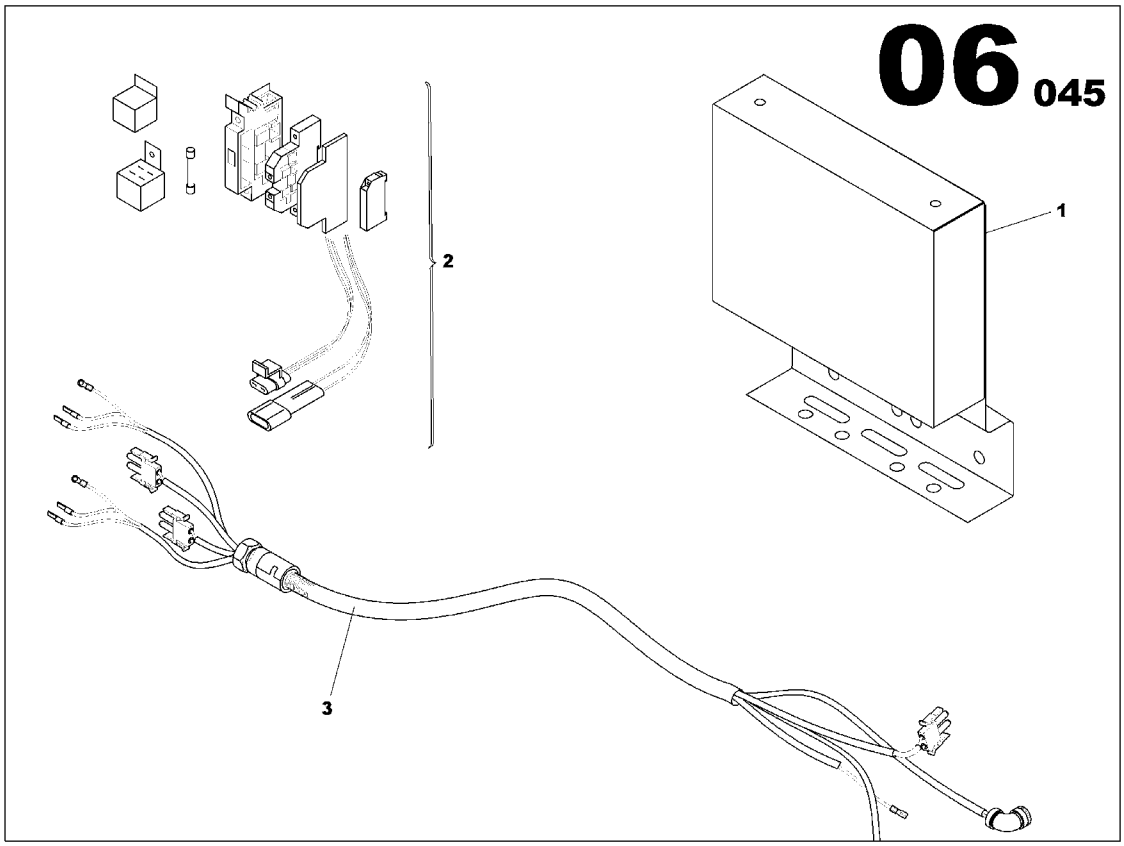

SPEED CONTROL FUNCTION

Part numbers listed are only parts used in this model

Item	Part No.	Description	Qty	Un	From SN	To SN	Order PN	Page
1	17137522	ELECTRONIC REGULATION ASSEMBLY	1	UN			17137522	19
2	85499416	WIRING LOOM C105	1	UN			85499416	

ELECTRONIC REGULATION ASSEMBLY

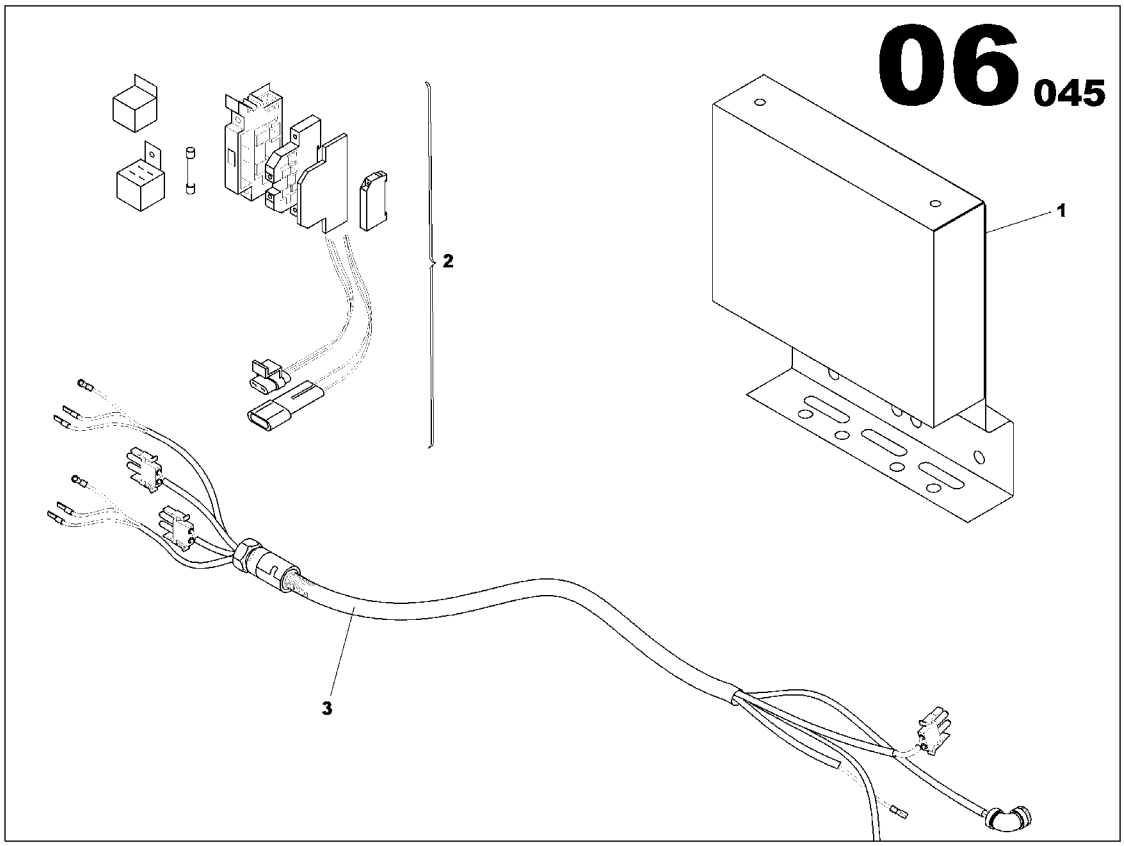

ELECTRONIC REGULATION ASSEMBLY
17137522

Part numbers listed are only parts used in this model

Item	Part No.	Description	Qty	Un	From SN	To SN	Order PN	Page
1	17137514	ELECTRONIC REGULATION ASSEMBLY	1	UN			17137514	21

ELECTRONIC REGULATION ASSEMBLY

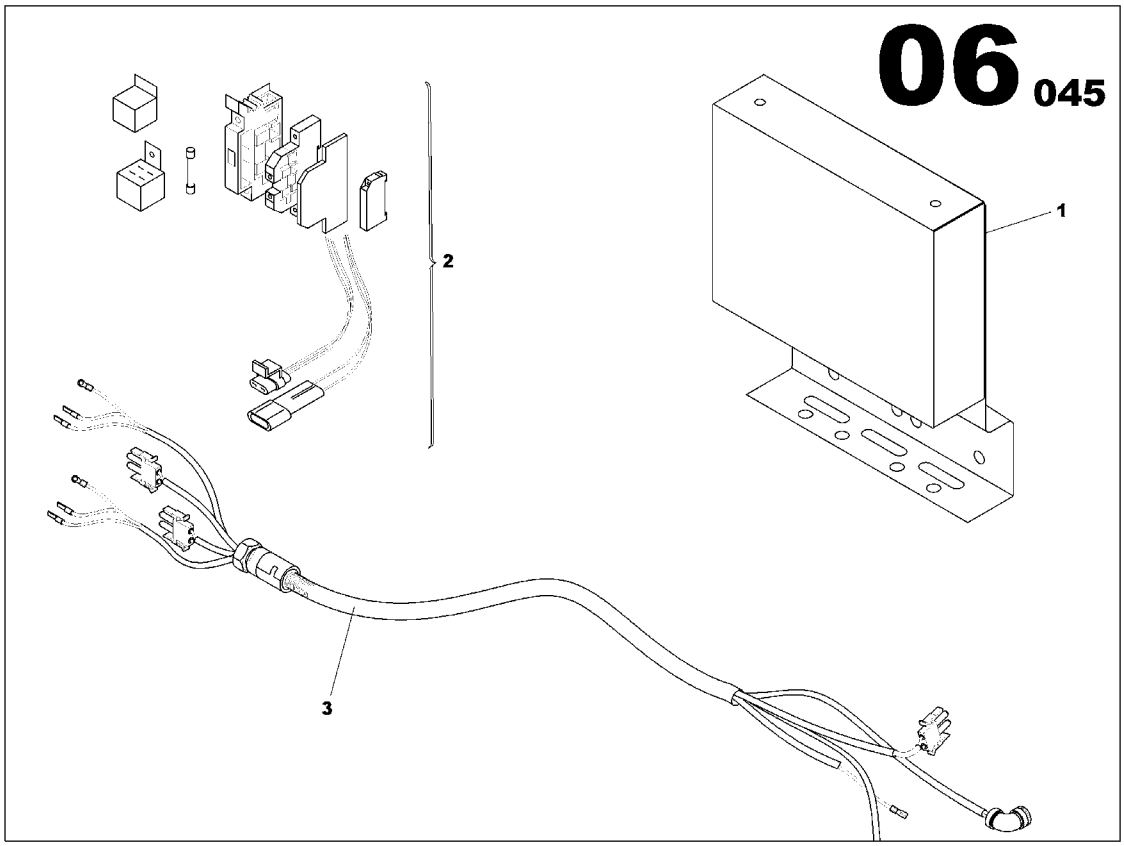

ELECTRONIC REGULATION ASSEMBLY
17137514

Part numbers listed are only parts used in this model

Item	Part No.	Description	Qty	Un	From SN	To SN	Order PN	Page
1	85637437	ELECTRONIC REGULATION ASSEMBLY	1	UN			85637437	23
2	17137571	ELECTRONIC REGULATION ASSEMBLY	1	UN			17137571	27
3	17140450	ELECTRONIC REGULATION ASSEMBLY	1	UN			17140450	29

ELECTRONIC REGULATION ASSEMBLY

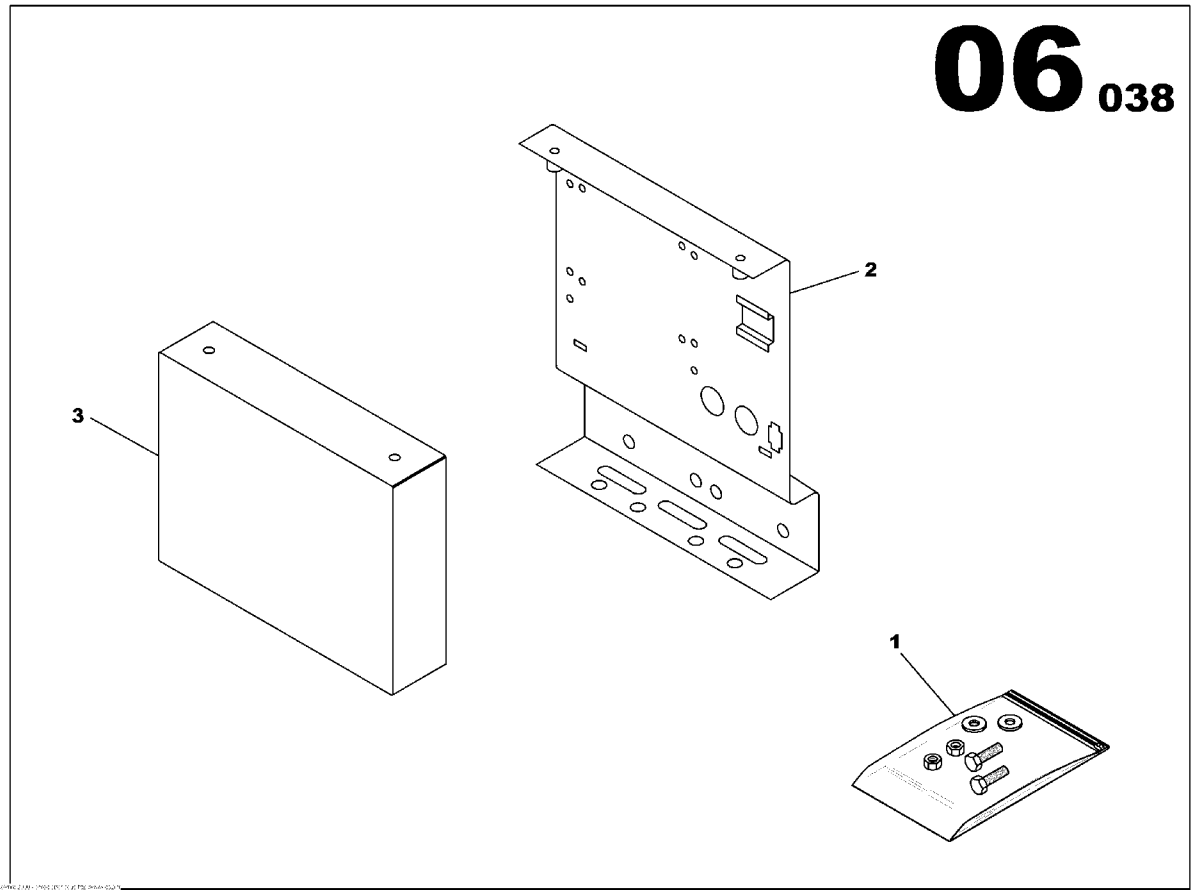

ELECTRONIC REGULATION ASSEMBLY
85637437

Part numbers listed are only parts used in this model

Item	Part No.	Description	Qty	Un	From SN	To SN	Order PN	Page
1	85639425	SCREWS ASSEMBLY	1	UN			85639425	25
2	85638377	REGULATOR BRACKET	1	UN			85638377	
3	85638385	REGULATOR HOUSING COVER	1	UN			85638385	

SCREWS ASSEMBLY

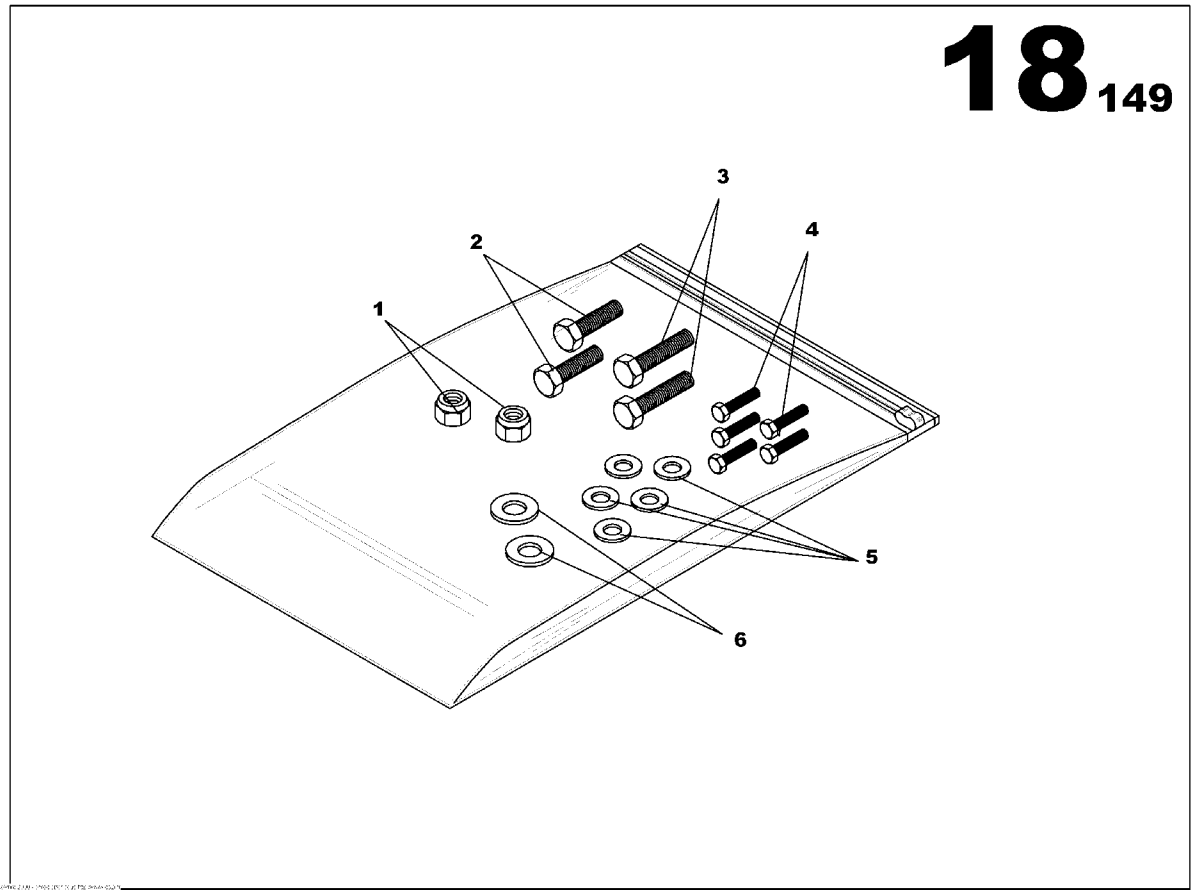

SCREWS ASSEMBLY
85639425

Part numbers listed are only parts used in this model

Item	Part No.	Description	Qty	Un	From SN	To SN	Order PN	Page
1	85430585	NUT M10	2	UN			85430585	
2	85636389	SCREW H M6x16	2	UN			85636389	
3	85631547	SCREW H M10x25	2	UN			85631547	
4	17131160	SCREW H M5x16	5	UN			17131160	
5	85429967	WASHER 5x12	5	UN			85429967	
6	85429728	WASHER D10x22	2	UN			85429728	

ELECTRONIC REGULATION ASSEMBLY

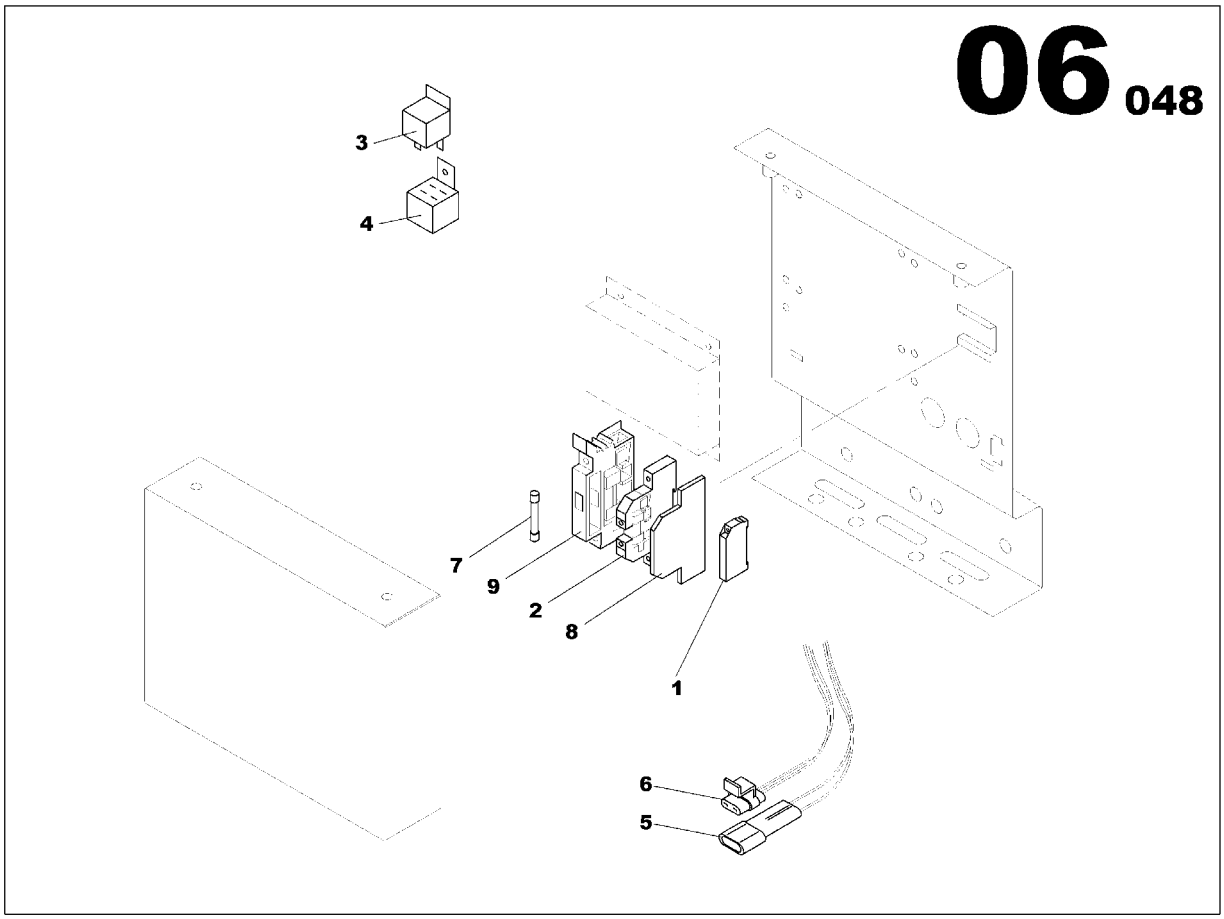

ELECTRONIC REGULATION ASSEMBLY
17137571

Part numbers listed are only parts used in this model

Item	Part No.	Description	Qty	Un	From SN	To SN	Order PN	Page
1	85408706	STOP	1	UN			85408706	
2	85412542	TERMINAL BLOCK	1	UN			85412542	
3	85423366	RELAY 24V 10/20A	1	UN			85423366	
4	85408912	AUTOMOBILE RELAY BASE	1	UN			85408912	
5	85412989	2 POINTS APPLIANCE CONNECTOR	1	UN			85412989	
6	85412997	APPLIANCE CONNECTOR	1	UN			85412997	
7	85639045	FUSE CYLINDRICAL 15A	1	UN			85639045	
8	85639060	PLASTIC COVER TERMINAL BLOCK	1	UN			85639060	
9	17130006	FUSE HOUSING TERMINAL BLOCK	1	UN			17130006	

ELECTRONIC REGULATION ASSEMBLY

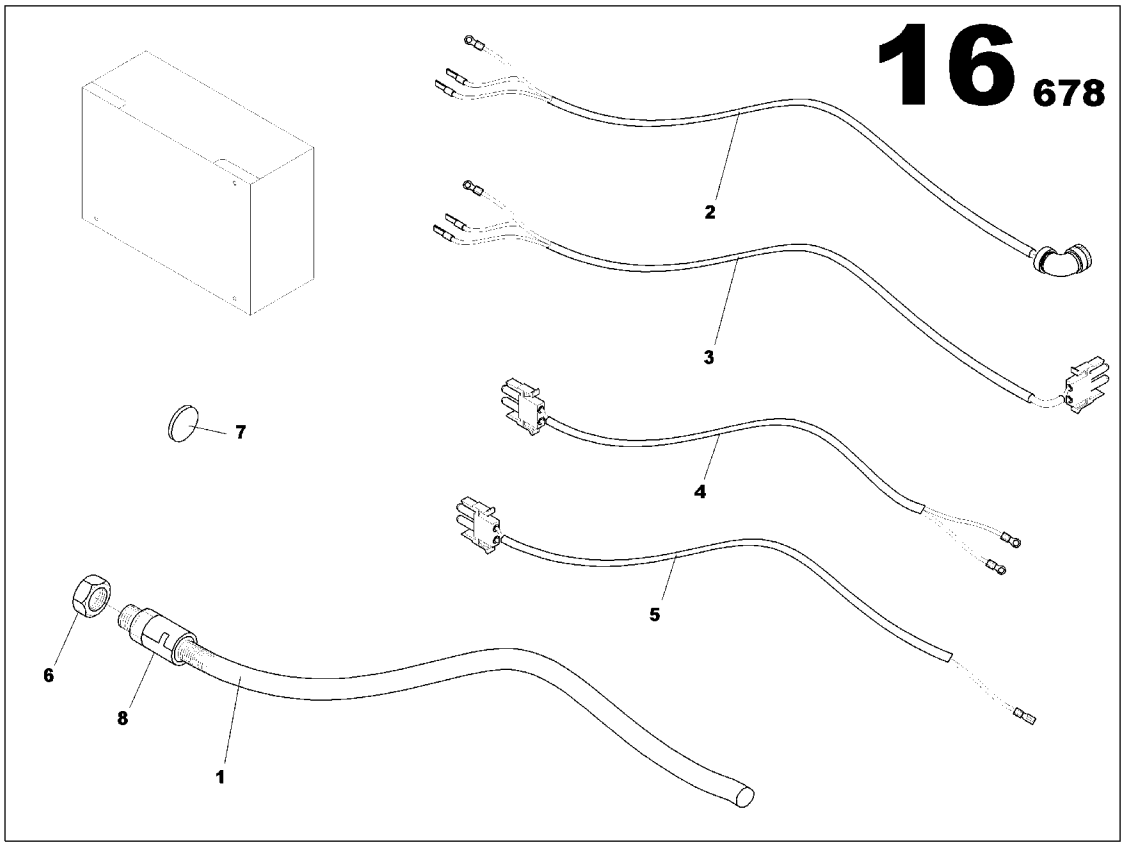

ELECTRONIC REGULATION ASSEMBLY
17140450

Part numbers listed are only parts used in this model

Item	Part No.	Description	Qty	Un	From SN	To SN	Order PN	Page
1	85638708	ELECTRICAL SHAFT D19	0.6	ML			85638708	
2	17130485	ELECTRONIC REGULATION CABLE 2x1.5mm2	1	UN			17130485	
3	17130501	ELECTRONIC REGULATION CABLE 2x0.5mm2	1	UN			17130501	
4	17140500	ELECTRONIC REGUL. SUPPLY WIRING LOOM L1900-400-400	1	UN			17140500	
5	17140526	ELECTRONIC REGULATION WIRING LOOM	1	UN			17140526	
6	85408664	GLAND NUT SCREW PG16	1	UN			85408664	
7	85415388	RUBBER GROMMET D22	1	UN			85415388	
8	85639052	PIPE UNION PG16	1	UN			85639052	

ENGINE WIRING FUNCTION

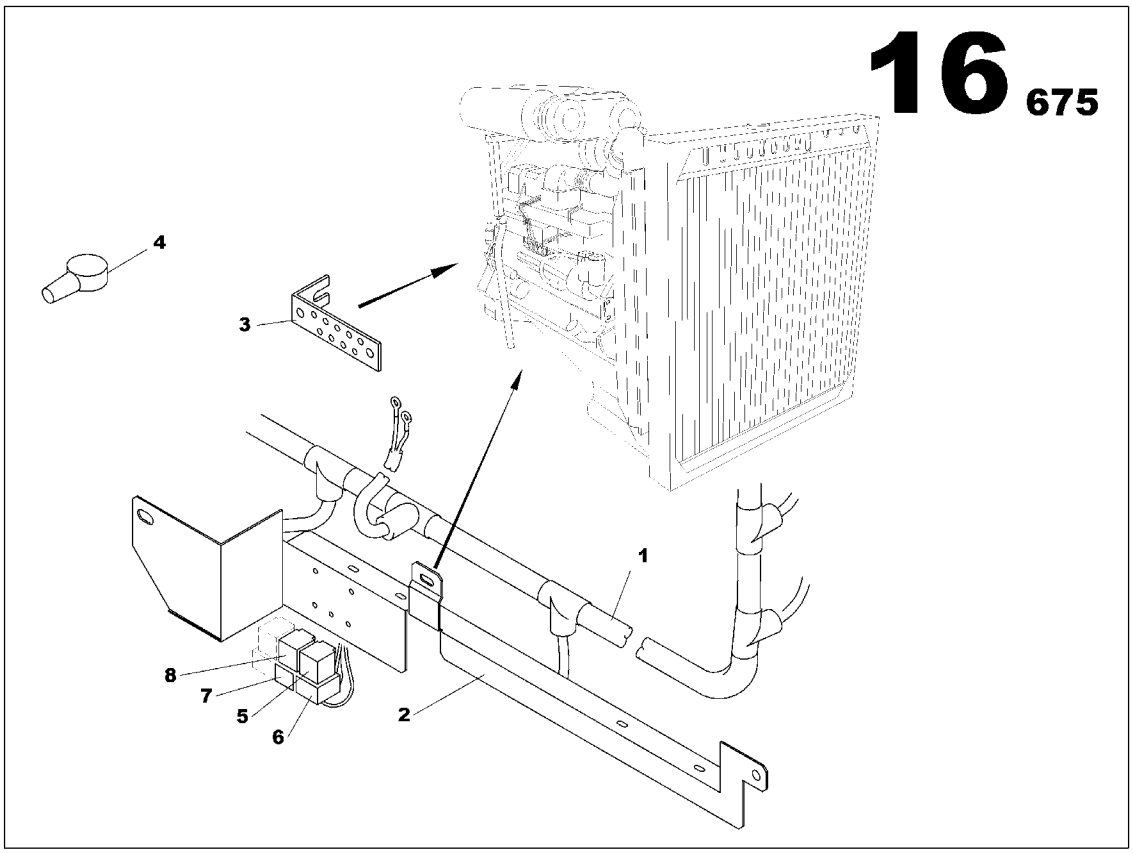

ENGINE WIRING FUNCTION

Part numbers listed are only parts used in this model

Item	Part No.	Description	Qty	Un	From SN	To SN	Order PN	Page
1	85418242	ENGINE WIRING LOOM VO 10L	1	UN			85418242	33
2	85638971	INTELLISYS 010 WIRING LOOM ASSEMBLY JD 6081	1	UN			85638971	35
3	85635712	ELECTRIC SHAFT ASSEMBLY	1	UN			85635712	39

ENGINE WIRING LOOM VO 10L

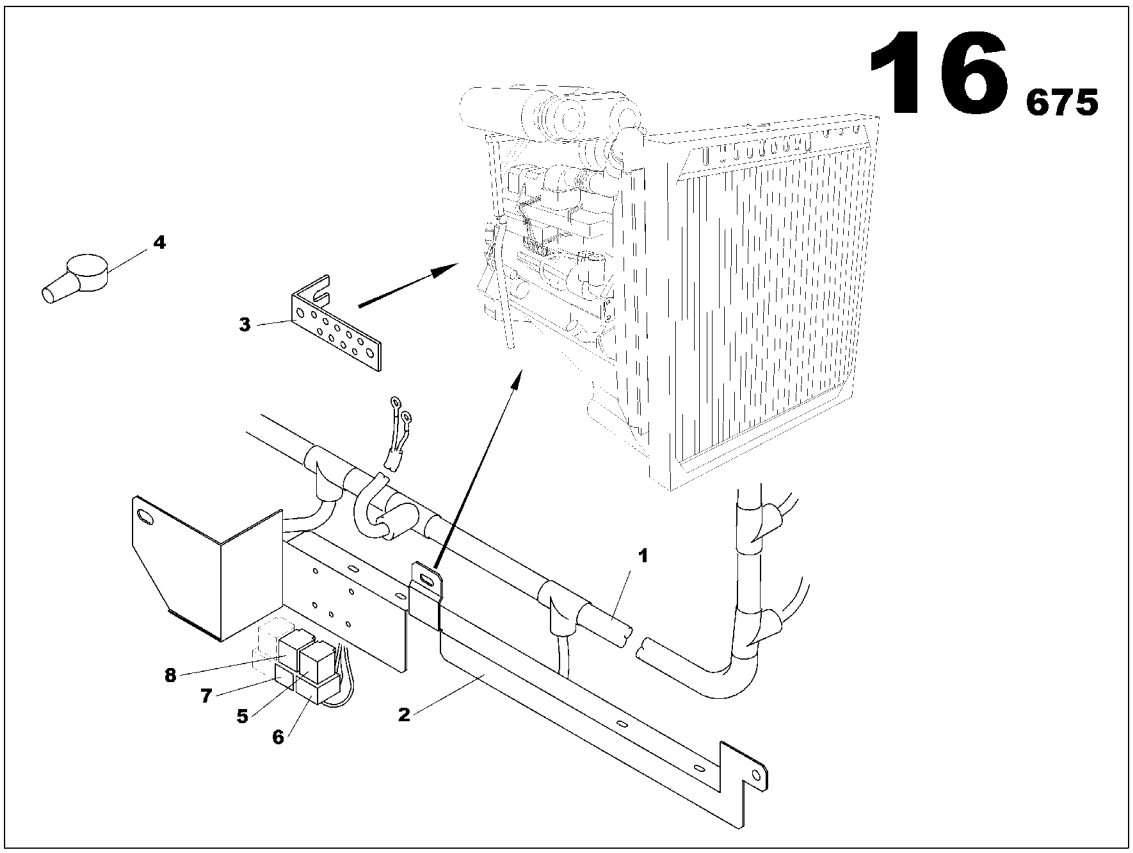

ENGINE WIRING LOOM VO 10L
85418242

Part numbers listed are only parts used in this model

Item	Part No.	Description	Qty	Un	From SN	To SN	Order PN	Page
1	85421352	ENGINE WIRING LOOM VOLVO 7L	1	UN			85421352	
2	85423697	WIRING BRACKET VO TAD740G	1	UN			85423697	
3	85408078	COPPER BAR 5x25	1	UN			85408078	
4	85623833	COWL	1	UN			85623833	
5	85423366	RELAY 24V 10/20A	1	UN			85423366	
6	85413292	AUTOMOBILE RELAY BASE	1	UN			85413292	
7	85408912	AUTOMOBILE RELAY BASE	1	UN			85408912	
8	85423374	RELAY	1	UN			85423374	

INTELLISYS 010 WIRING LOOM ASSEMBLY JD 6081

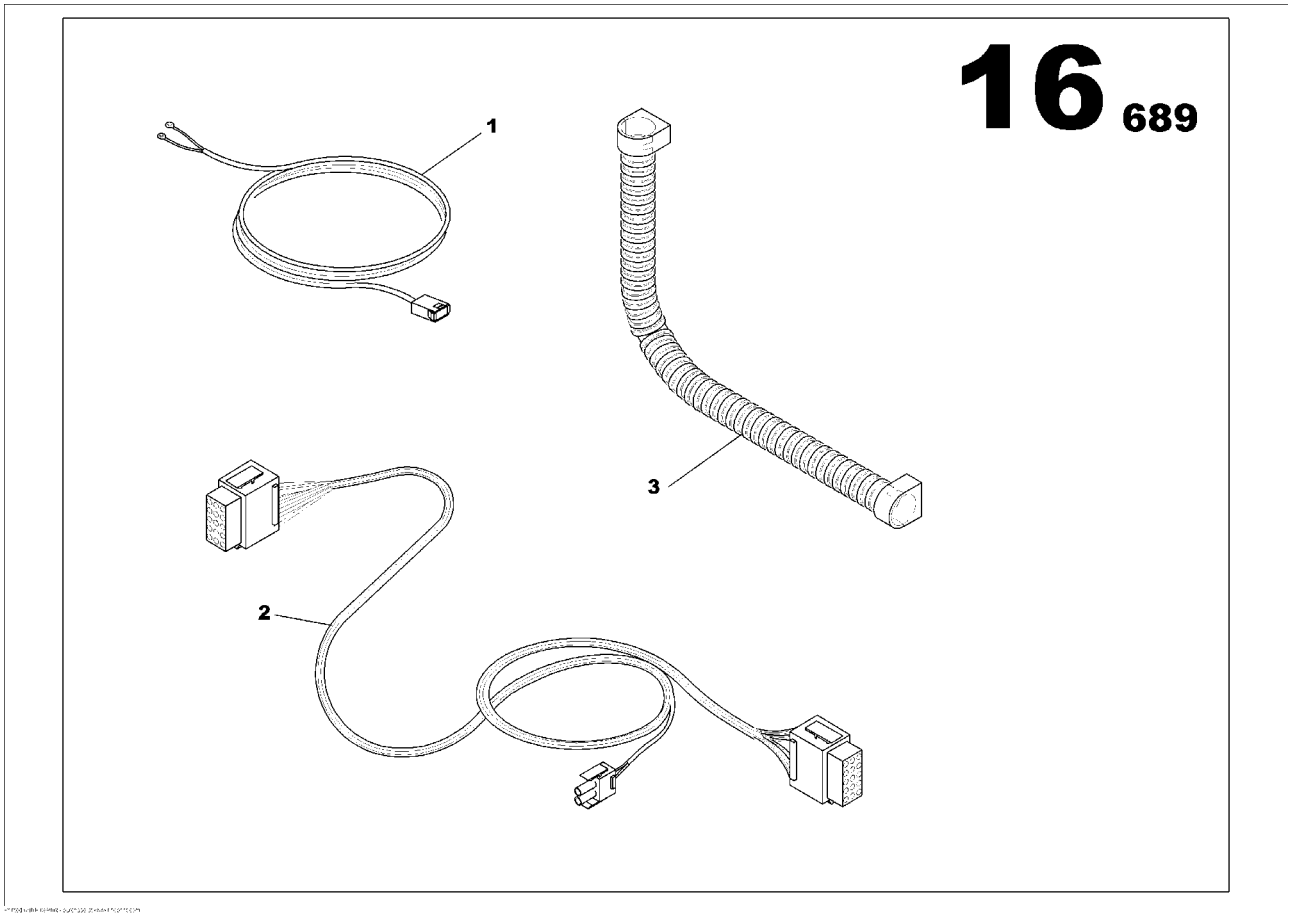

INTELLISYS 010 WIRING LOOM ASSEMBLY JD 6081
85638971

Part numbers listed are only parts used in this model

Item	Part No.	Description	Qty	Un	From SN	To SN	Order PN	Page
1	85638690	INTELLISYS WIRING LOOM 010-BAT	1	UN			85638690	
2	85635704	INTELLISYS 010 WIRING LOOM ASSEMBLY JD 6081	1	UN	032004983		85635704	37

INTELLISYS 010 WIRING LOOM ASSEMBLY JD 6081

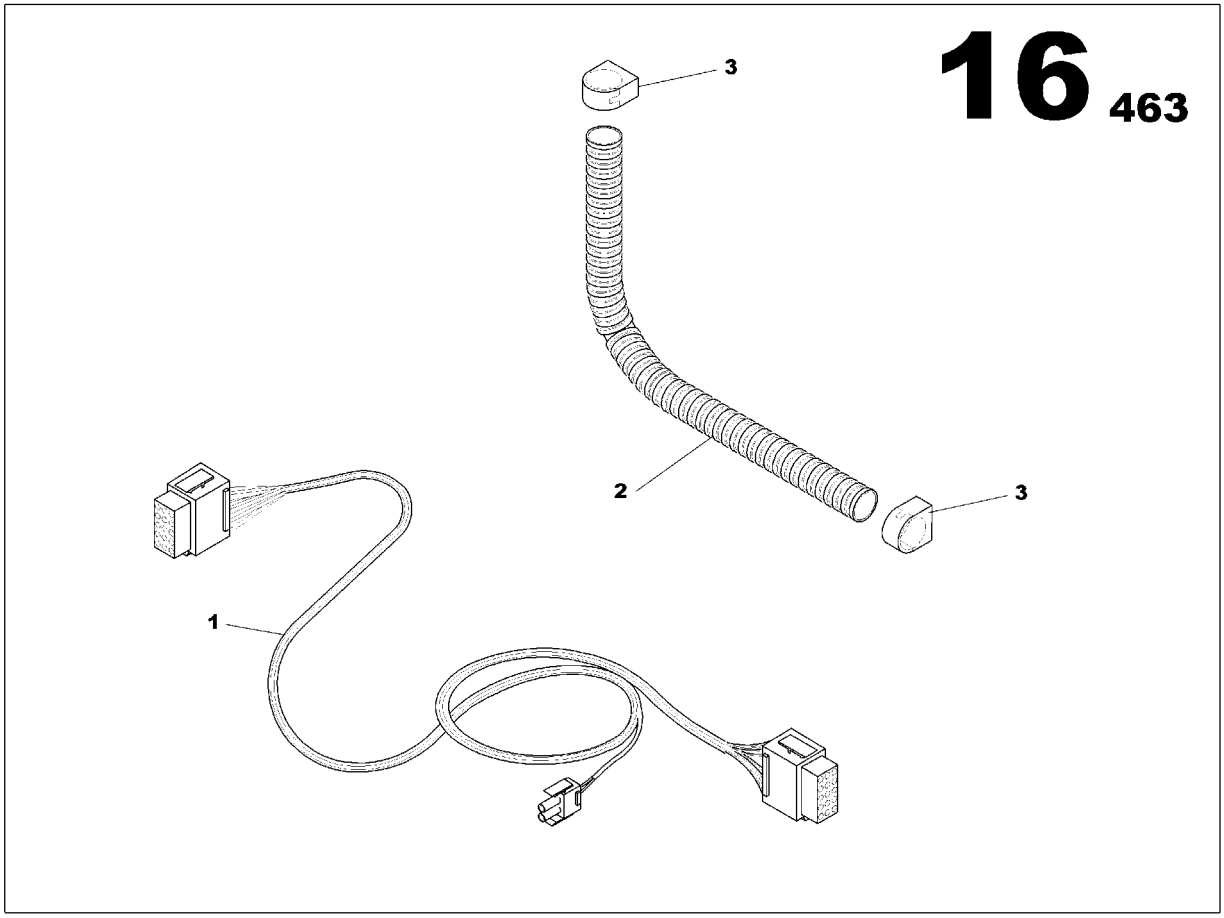

INTELLISYS 010 WIRING LOOM ASSEMBLY JD 6081
85635704

Part numbers listed are only parts used in this model

Item	Part No.	Description	Qty	Un	From SN	To SN	Order PN	Page
1	85635217	INTELLISYS WIRING LOOM 010	1	UN			85635217	
2	85427268	ELECTRICAL SHAFT D29	1.7	ML			85427268	
3	85427276	CLIP D29	2	UN			85427276	

ELECTRIC SHAFT ASSEMBLY

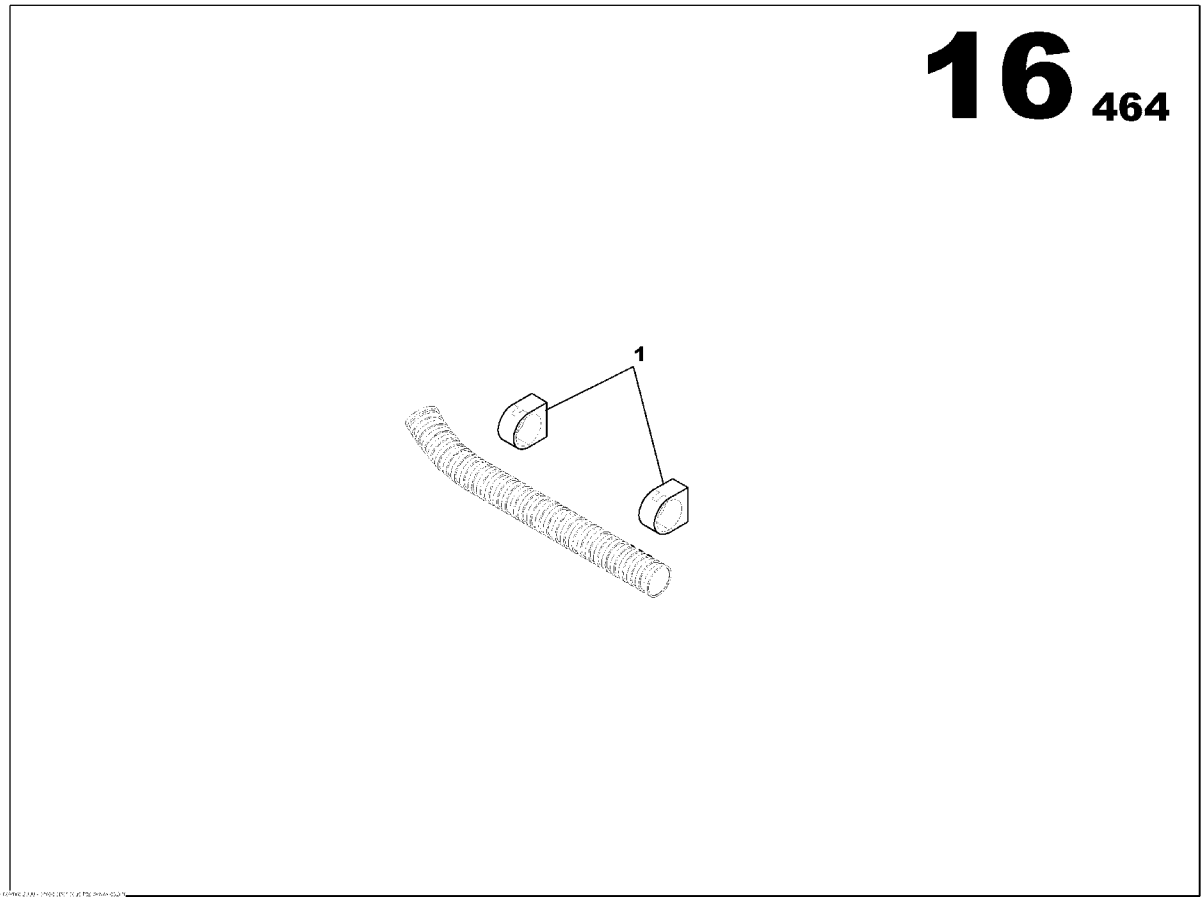

ELECTRIC SHAFT ASSEMBLY
85635712

Part numbers listed are only parts used in this model

Item	Part No.	Description	Qty	Un	From SN	To SN	Order PN	Page
1	85427029	CLIP D29	2	UN			85427029	

ALTERNATOR FUNCTION

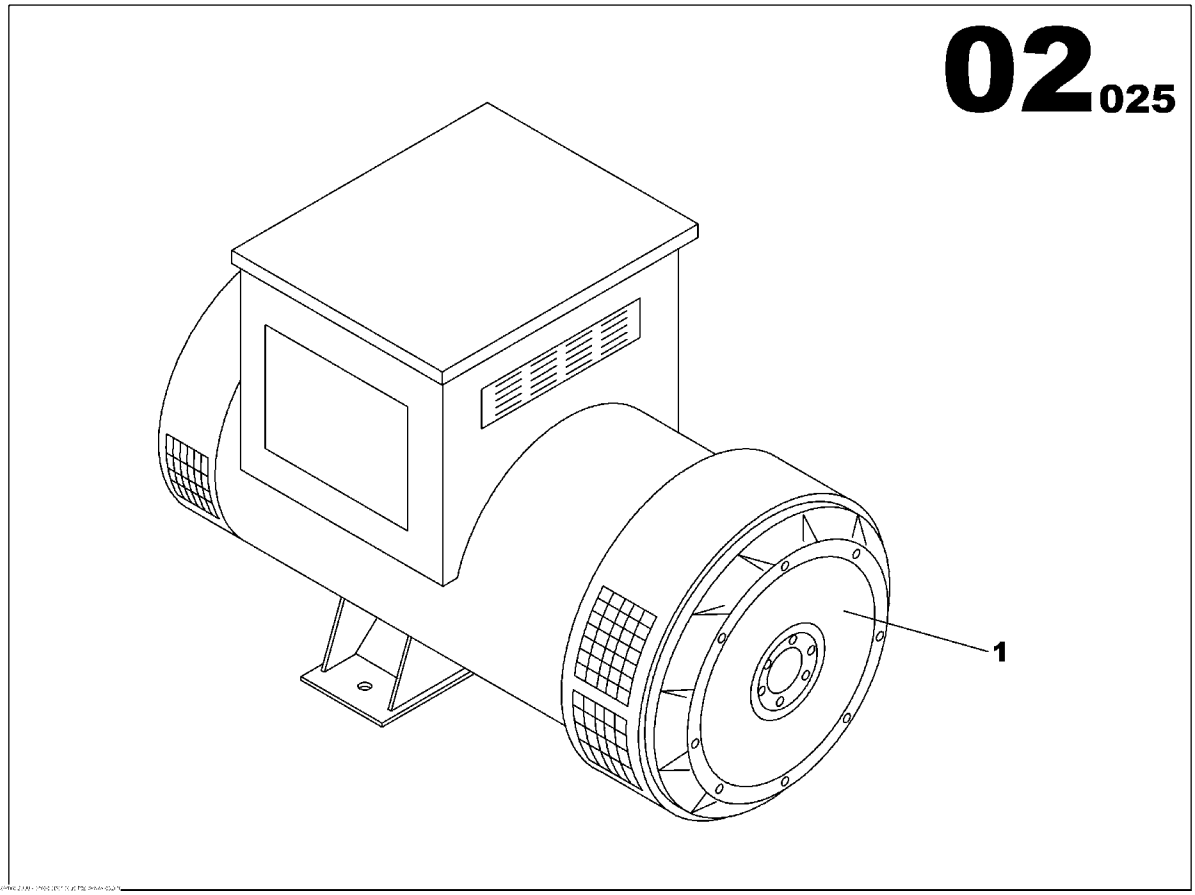

ALTERNATOR FUNCTION

Part numbers listed are only parts used in this model

Item	Part No.	Description	Qty	Un	From SN	To SN	Order PN	Page
1	85638591	OUTPUT CABLES ALTERNATOR ASSEMBLY	1	UN			85638591	43
2		ALTERNATOR	1	UN				51

OUTPUT CABLES ALTERNATOR ASSEMBLY

OUTPUT CABLES ALTERNATOR ASSEMBLY
85638591

Part numbers listed are only parts used in this model

Item	Part No.	Description	Qty	Un	From SN	To SN	Order PN	Page
1	85638583	OUTPUT CABLES ALTERNATOR ASSEMBLY	1	UN			85638583	45

OUTPUT CABLES ALTERNATOR ASSEMBLY

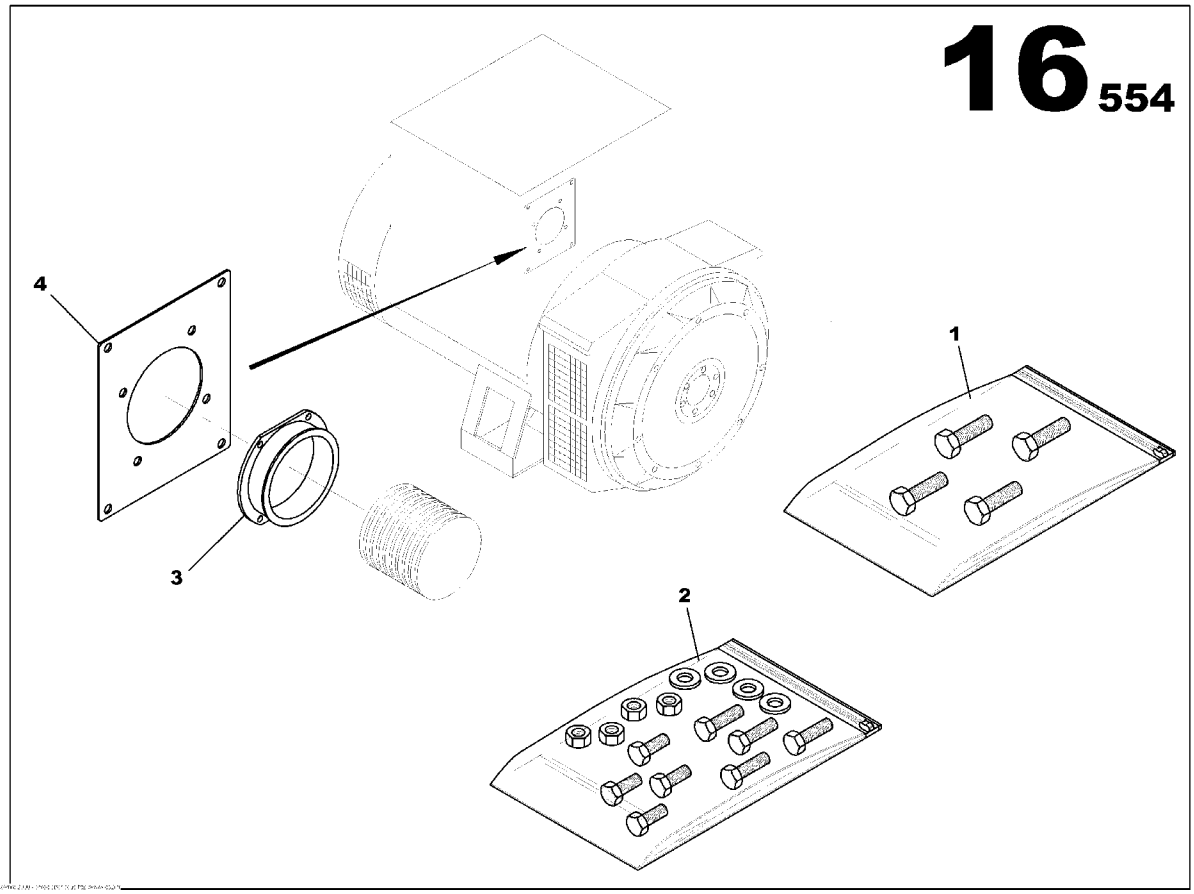

OUTPUT CABLES ALTERNATOR ASSEMBLY
85638583

Part numbers listed are only parts used in this model

Item	Part No.	Description	Qty	Un	From SN	To SN	Order PN	Page
1	85639383	SCREWS ASSEMBLY	1	UN			85639383	47
2	85639417	SCREWS ASSEMBLY	1	UN			85639417	49
3	85499754	PIPE UNION PG70	1	UN			85499754	
4	85638534	PLATEN PANEL ALTERNATOR OPTION	1	UN			85638534	

SCREWS ASSEMBLY

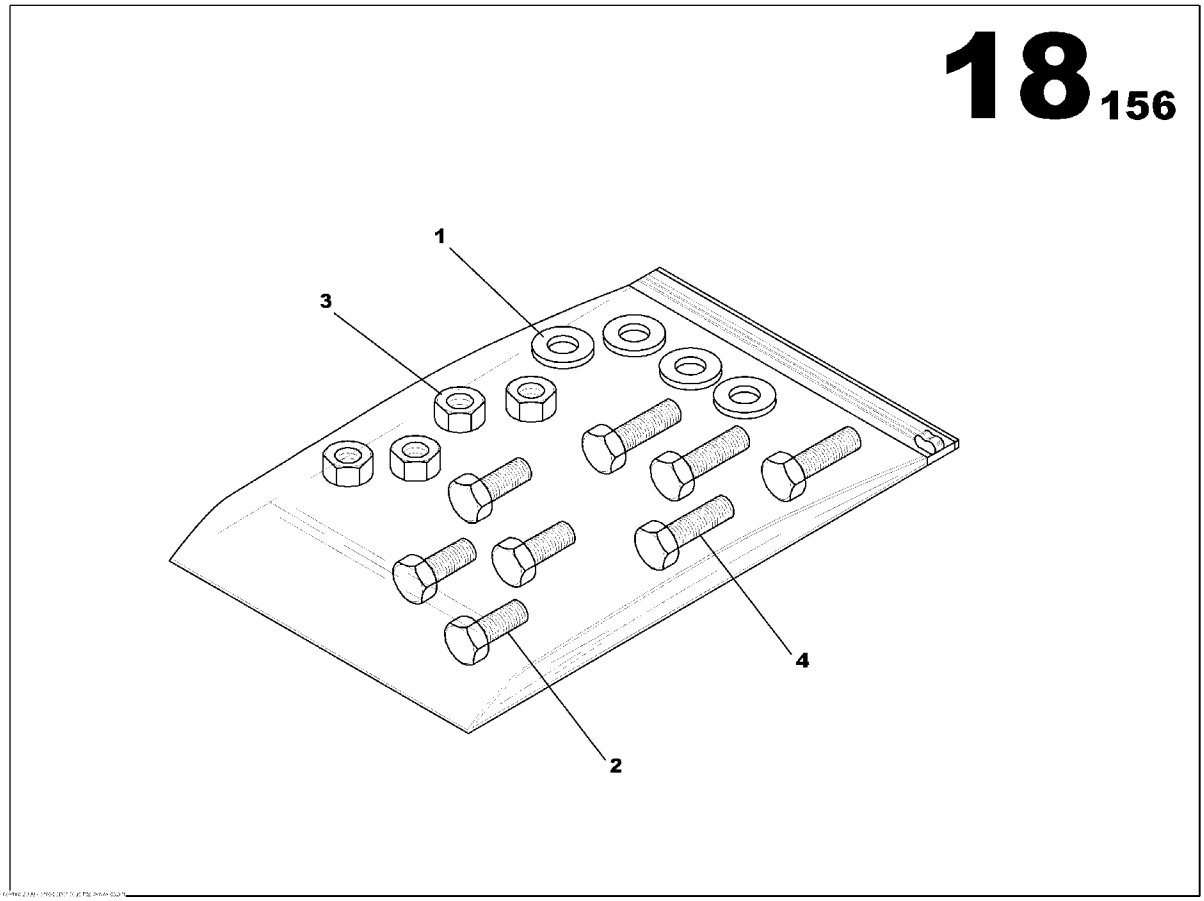

SCREWS ASSEMBLY
85639383

Part numbers listed are only parts used in this model

Item	Part No.	Description	Qty	Un	From SN	To SN	Order PN	Page
1	85636736	WASHER 6x12	4	UN			85636736	
2	85639318	SCREW H M6x16	4	UN	02010754		85639318	
3	85507911	NUT M6	4	UN			85507911	

SCREWS ASSEMBLY

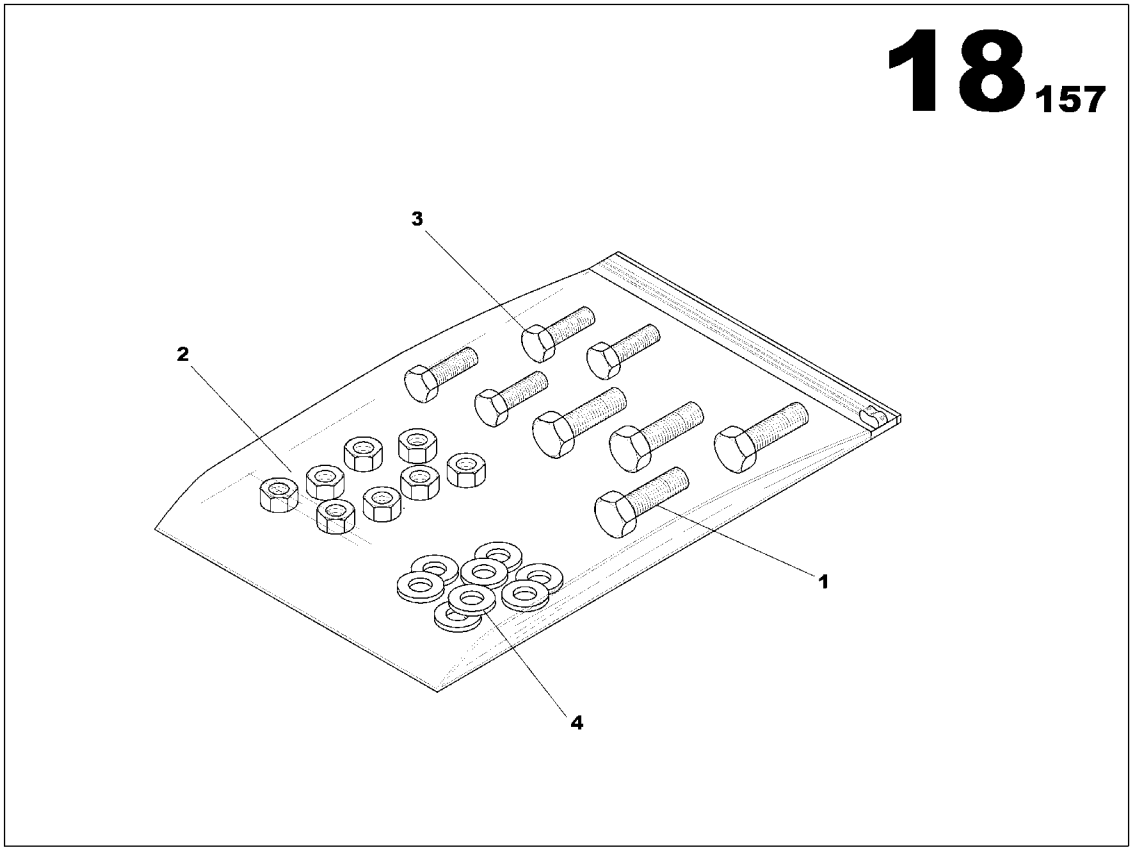

SCREWS ASSEMBLY
85639417

Part numbers listed are only parts used in this model

Item	Part No.	Description	Qty	Un	From SN	To SN	Order PN	Page
1	85636389	SCREW H M6x16	4	UN			85636389	
2	85429553	NUT M4	4	UN			85429553	
3	85636363	SCREW HS M4x16	4	UN			85636363	
4	85636728	WASHER 4x10	8	UN			85636728	

ALTERNATOR

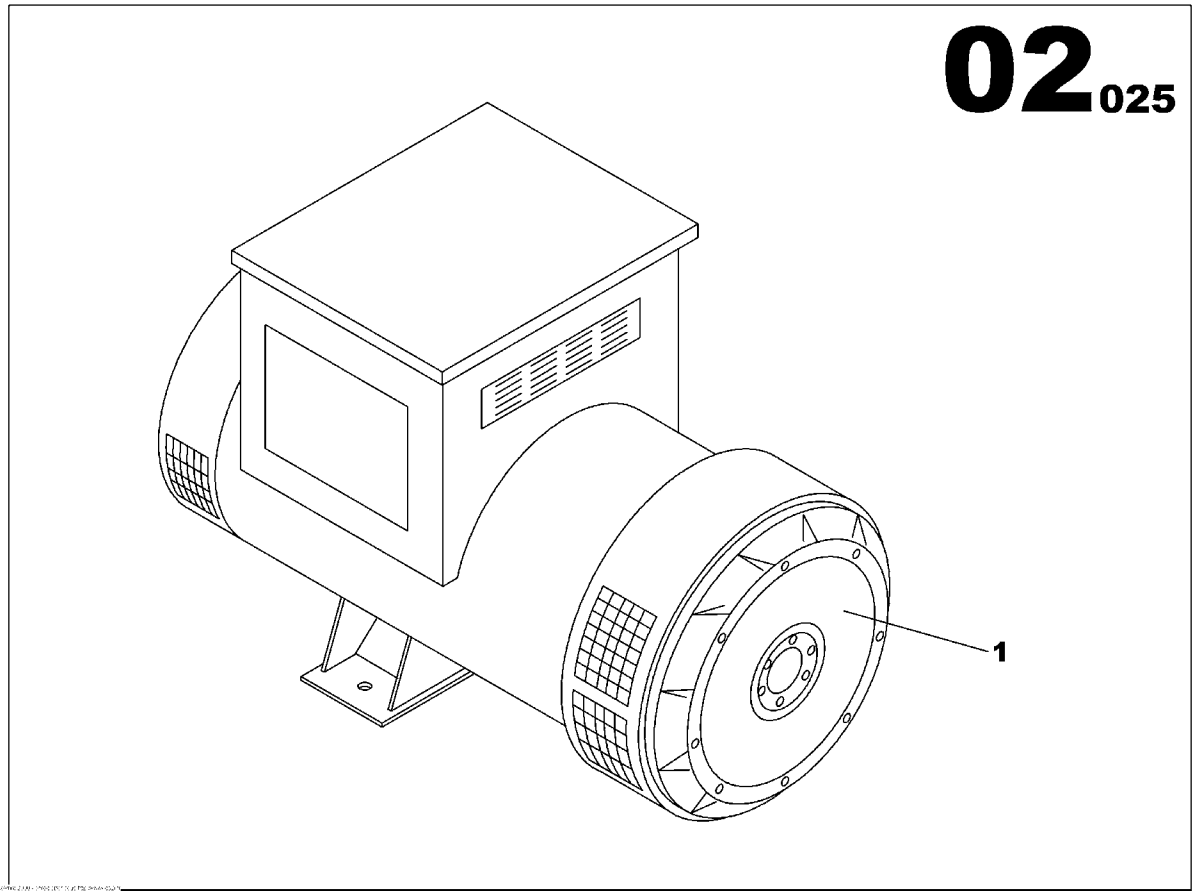

ALTERNATOR

Part numbers listed are only parts used in this model

Item	Part No.	Description	Qty	Un	From SN	To SN	Order PN	Page
1	85416600	ALTERNATOR LS 462L	1	UN			85416600	53

ALTERNATOR LS 462L

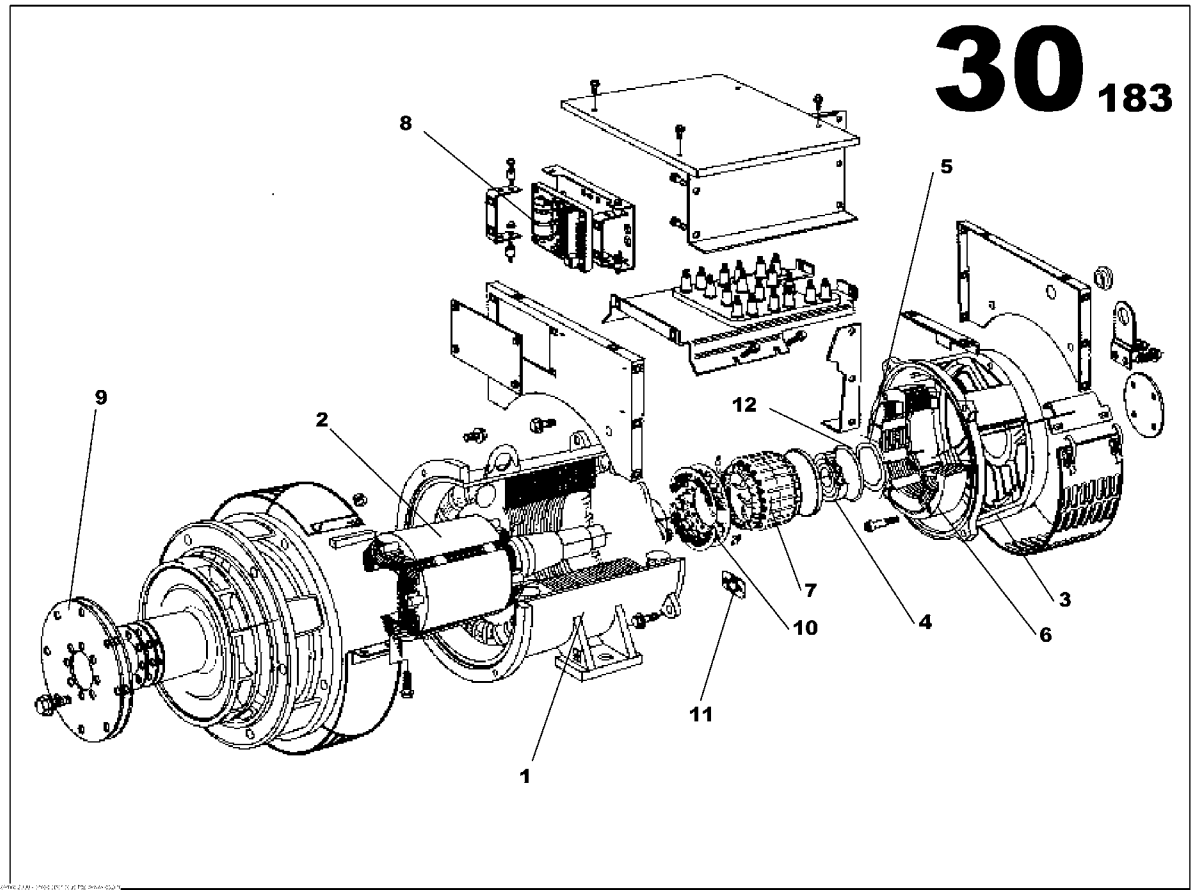

ALTERNATOR LS 462L
85416600

Part numbers listed are only parts used in this model

Item	Part No.	Description	Qty	Un	From SN	To SN	Order PN	Page
1	85508810	WOUND STATOR ASSEMBLY *Alternator S/N needed to supply this part-*	1	UN			85508810	
2	85509123	WOUND ROTOR ASSEMBLY *Alternator S/N needed to supply this part-*	1	UN			85509123	
3	85508877	N.D.E BRACKET	1	UN			85508877	
4	85425916	BALL BEARING	1	UN			85425916	
5	85509065	WAVY WASHER	1	UN			85509065	
6	85508927	WOUND EXCITER FIELD	1	UN			85508927	
7	85508968	WOUND EXCITER ARMATURE	1	UN			85508968	
8	85425577	GOVERNOR	1	UN			85425577	
9	85425940	COUPLING DISC LSA 462	1	UN			85425940	
10	85426179	DIODE BRIDGE	1	UN			85426179	
11	85402444	SURGE SUPPRESSOR	1	UN			85402444	
12	85509016	O RING	1	UN			85509016	

COOLER FUNCTION

Non illustré
Not illustrated

COOLER FUNCTION

Part numbers listed are only parts used in this model

Item	Part No.	Description	Qty	Un	From SN	To SN	Order PN	Page
1	17137027	RADIATOR VO TAD740 ASSEMBLY	1	UN			17137027	57

RADIATOR VO TAD740 ASSEMBLY

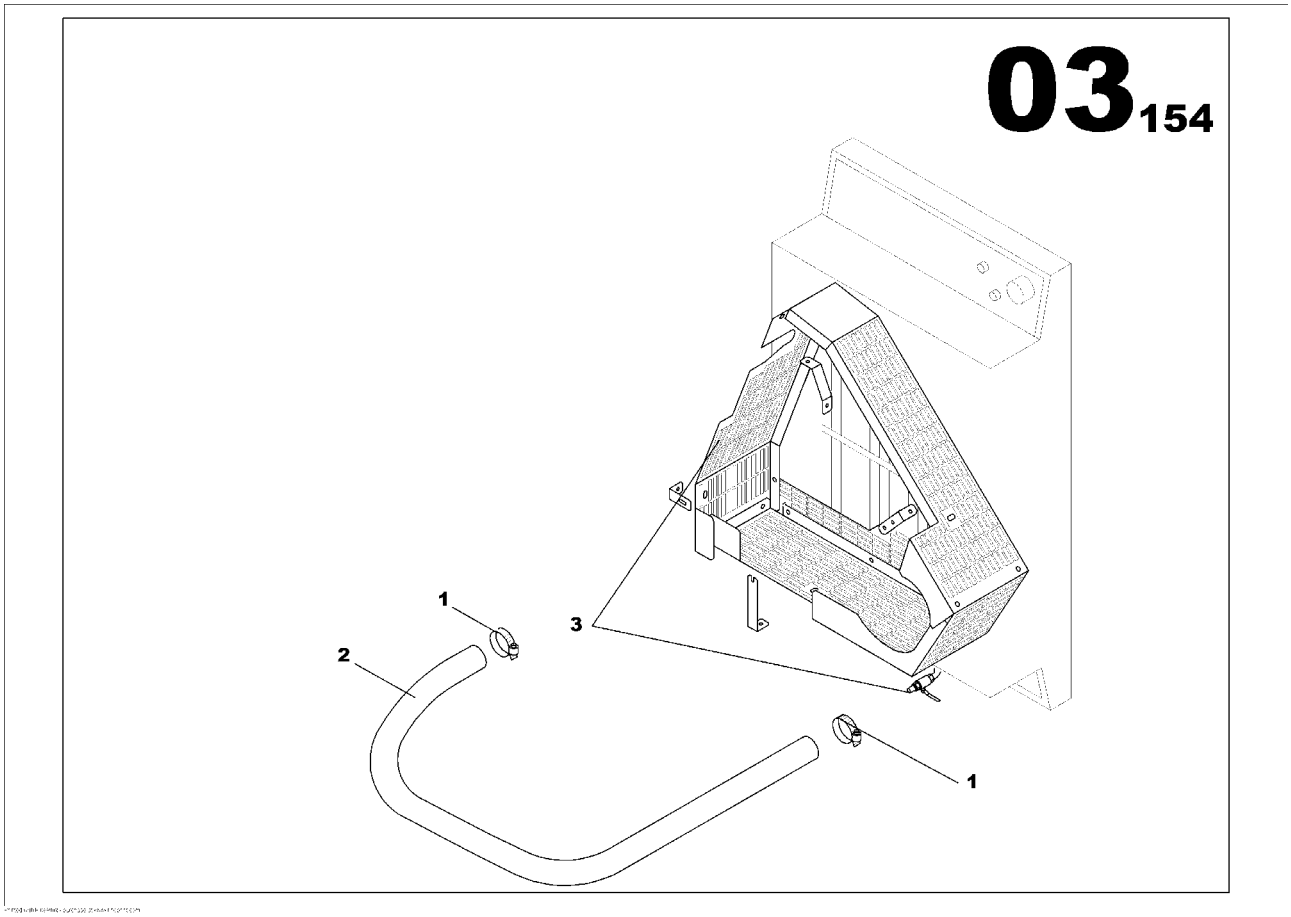

RADIATOR VO TAD740 ASSEMBLY
17137027

Part numbers listed are only parts used in this model

Item	Part No.	Description	Qty	Un	From SN	To SN	Order PN	Page
1	85409423	HOSE CLIP D20/32	2	UN			85409423	
2	85409597	FLEXIBLE HOSE D15x23	0.8	ML			85409597	
3	85419901	RADIATOR VO TAD740 ASSEMBLY	1	UN			85419901	59

RADIATOR VO TAD740 ASSEMBLY

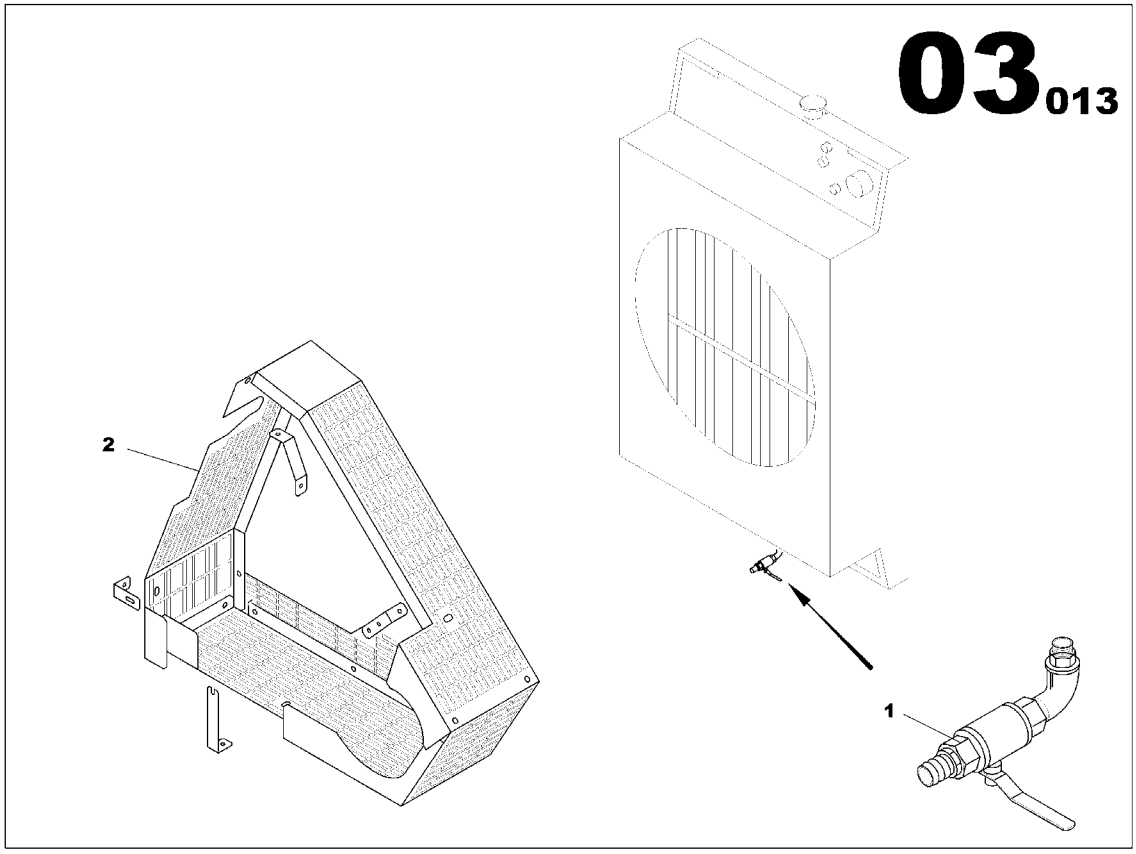

RADIATOR VO TAD740 ASSEMBLY
85419901

Part numbers listed are only parts used in this model

Item	Part No.	Description	Qty	Un	From SN	To SN	Order PN	Page
1	85421113	VOLVO RADIATOR DRAIN ASSEMBLY	1	UN			85421113	61
2	85420255	PULLEY GUARDS ASSEMBLY	1	UN			85420255	63

VOLVO RADIATOR DRAIN ASSEMBLY

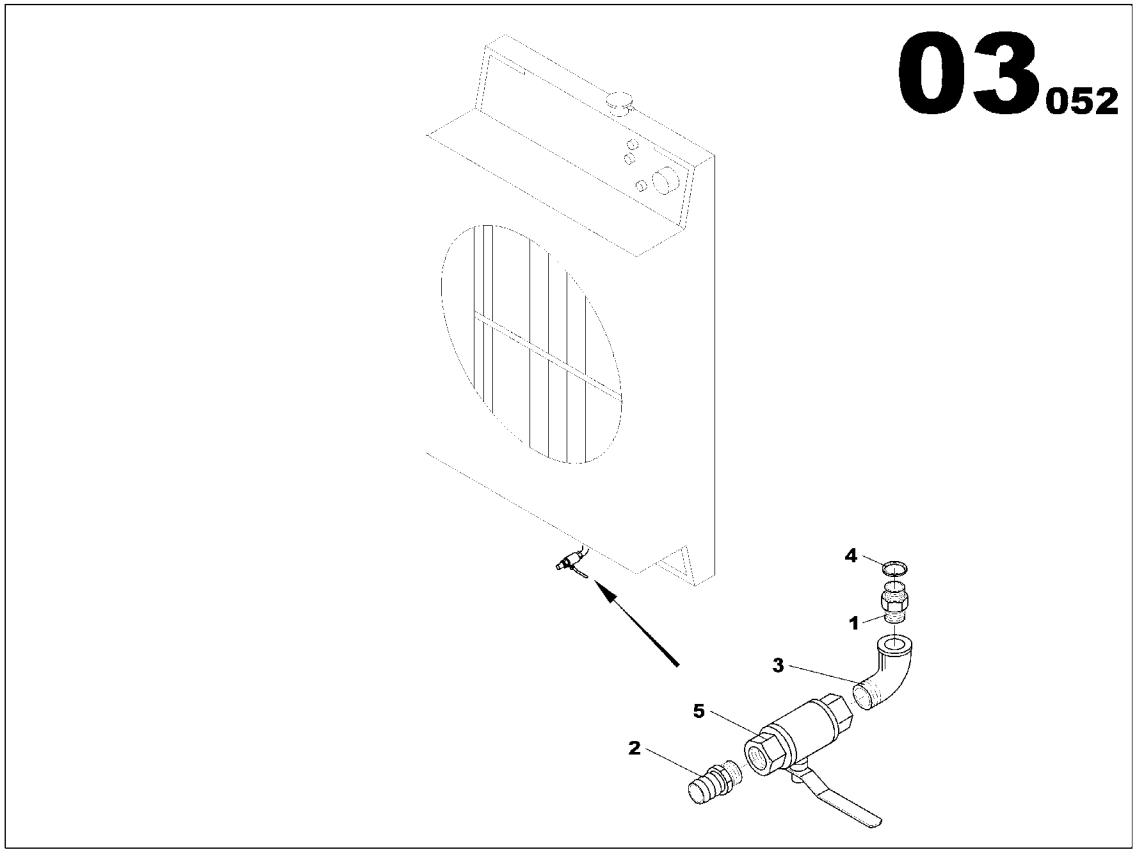

VOLVO RADIATOR DRAIN ASSEMBLY
85421113

Part numbers listed are only parts used in this model

Item	Part No.	Description	Qty	Un	From SN	To SN	Order PN	Page
1	85415701	PIPE UNION REDUCER MAL/MAL M14x150 3/8G	1	UN			85415701	
2	85409258	PIPE UNION MAL/MAL 3/8G	1	UN			85409258	
3	85409308	PIPE UNION ELBOW 90° MAL/FEM 3/8G	1	UN			85409308	
4	85410298	GASKET D14x18	1	UN			85410298	
5	85416451	2 WAYS VALVE	1	UN			85416451	

PULLEY GUARDS ASSEMBLY

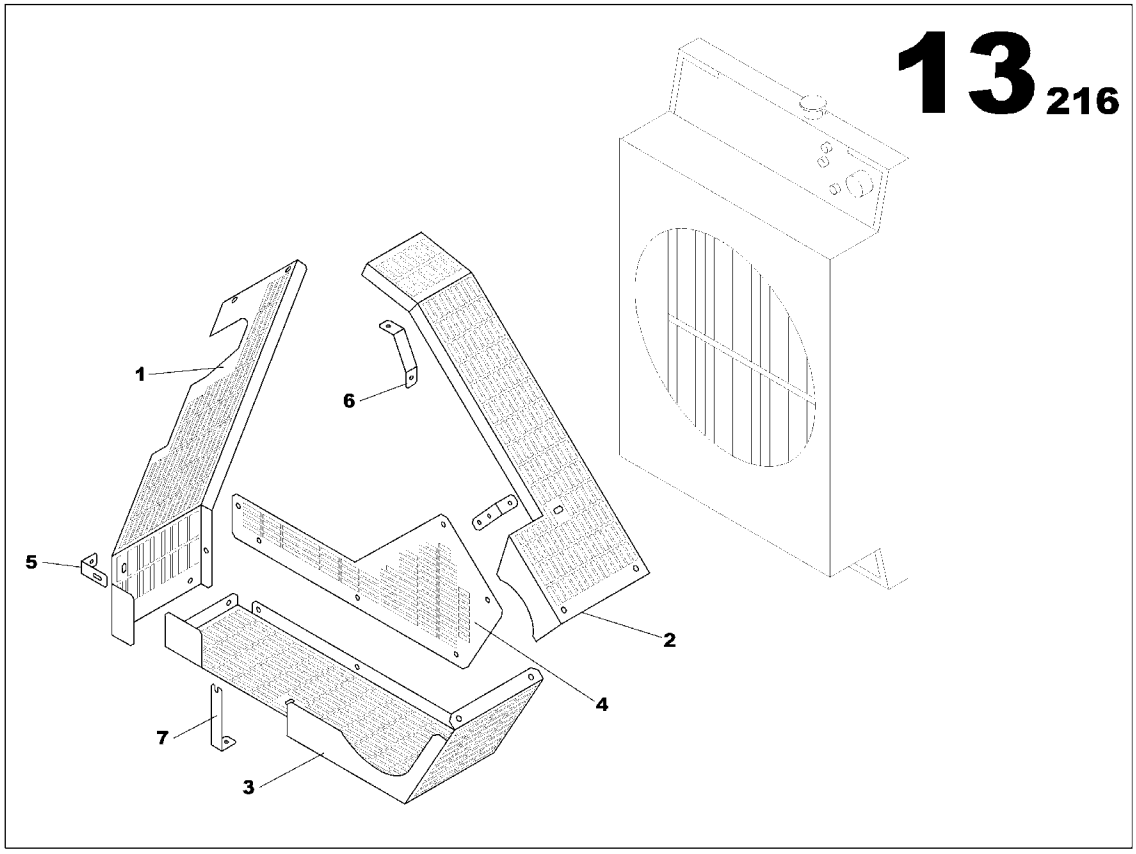

PULLEY GUARDS ASSEMBLY
85420255

Part numbers listed are only parts used in this model

Item	Part No.	Description	Qty	Un	From SN	To SN	Order PN	Page
1	85422947	RADIATOR FAN GUARD FRONT VO TAD740	1	UN			85422947	
2	85422954	RADIATOR FAN GUARD FRONT VO TAD740	1	UN			85422954	
3	85422962	RADIATOR FAN GUARD FRONT VO TAD740	1	UN			85422962	
4	85422970	RADIATOR FAN GUARD FRONT VO TAD740	1	UN			85422970	
5	85424125	FAN BELT GUARD BRACKET VO TAD7L	1	UN			85424125	
6	85424133	FAN BELT GUARD BRACKET VO TAD7L	1	UN			85424133	
7	85424141	FAN BELT GUARD BRACKET VO TAD7L	1	UN			85424141	

FUEL FUNCTION

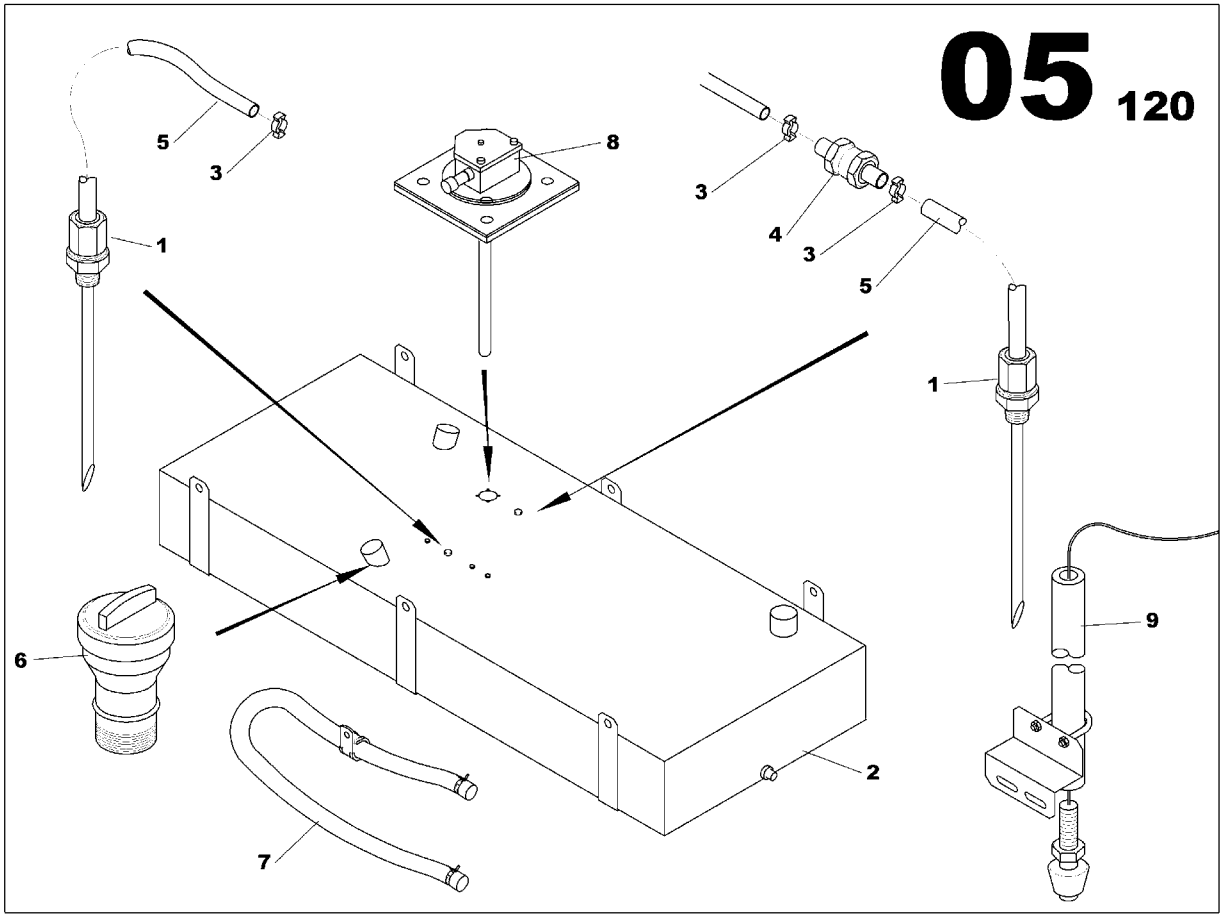

FUEL FUNCTION

Part numbers listed are only parts used in this model

Item	Part No.	Description	Qty	Un	From SN	To SN	Order PN	Page
1	17137217	FUEL PREFILTER KIT ASSEMBLY	1	UN			17137217	67
2	17137357	FUEL TANK ASSEMBLY	1	UN			17137357	71

FUEL PREFILTER KIT ASSEMBLY

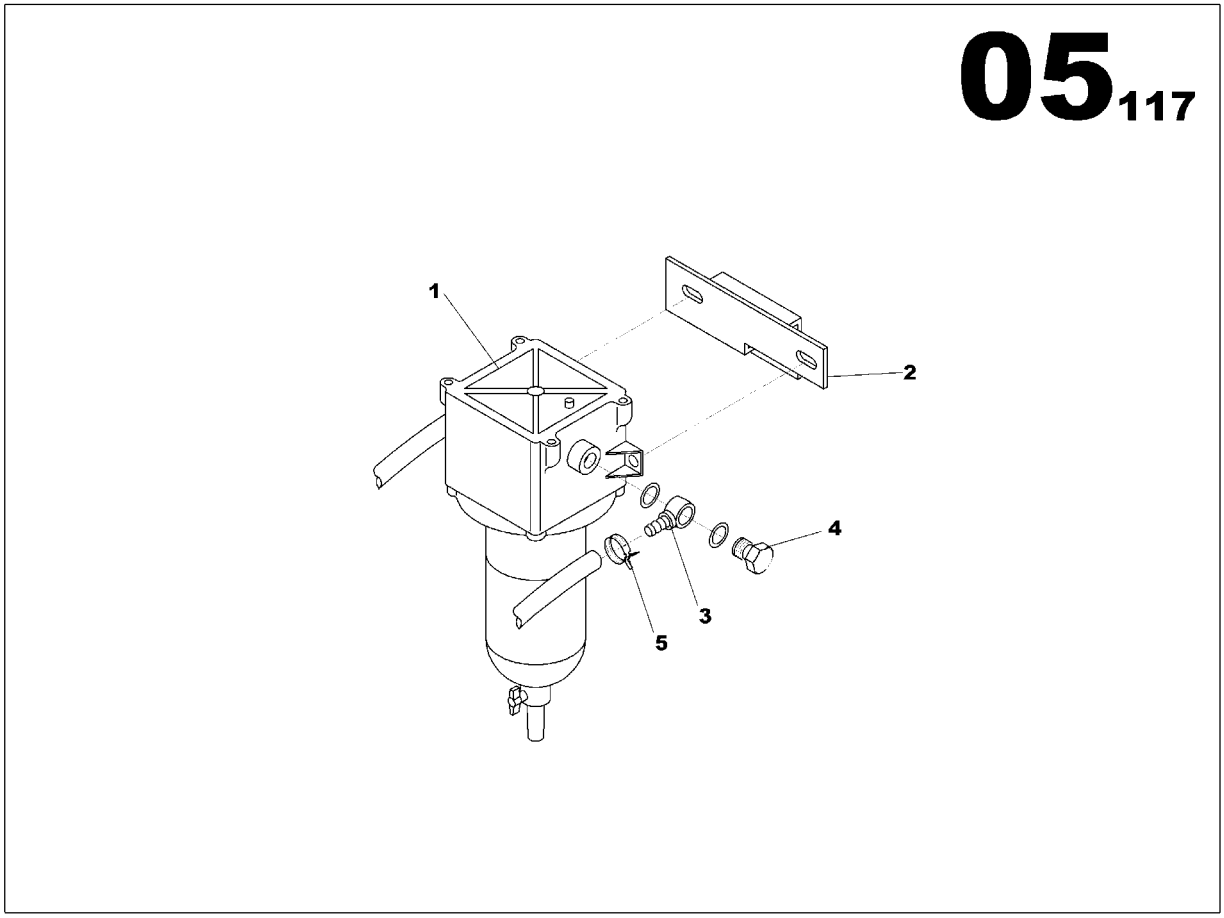

FUEL PREFILTER KIT ASSEMBLY
17137217

Part numbers listed are only parts used in this model

Item	Part No.	Description	Qty	Un	From SN	To SN	Order PN	Page
1	85421451	DECANTATION CARTRIDGE FILTER	1	UN			85421451	69
2	17137209	FUEL FILTER BRACKET	1	UN			17137209	
3	85507937	BANJO CONNECTOR MALE D10	2	UN			85507937	
4	85507945	BANJO SCREW M16X150 L28	2	UN			85507945	
5	85509727	SPRING CLAMP D17/19	2	UN			85509727	

DECANTATION CARTRIDGE FILTER

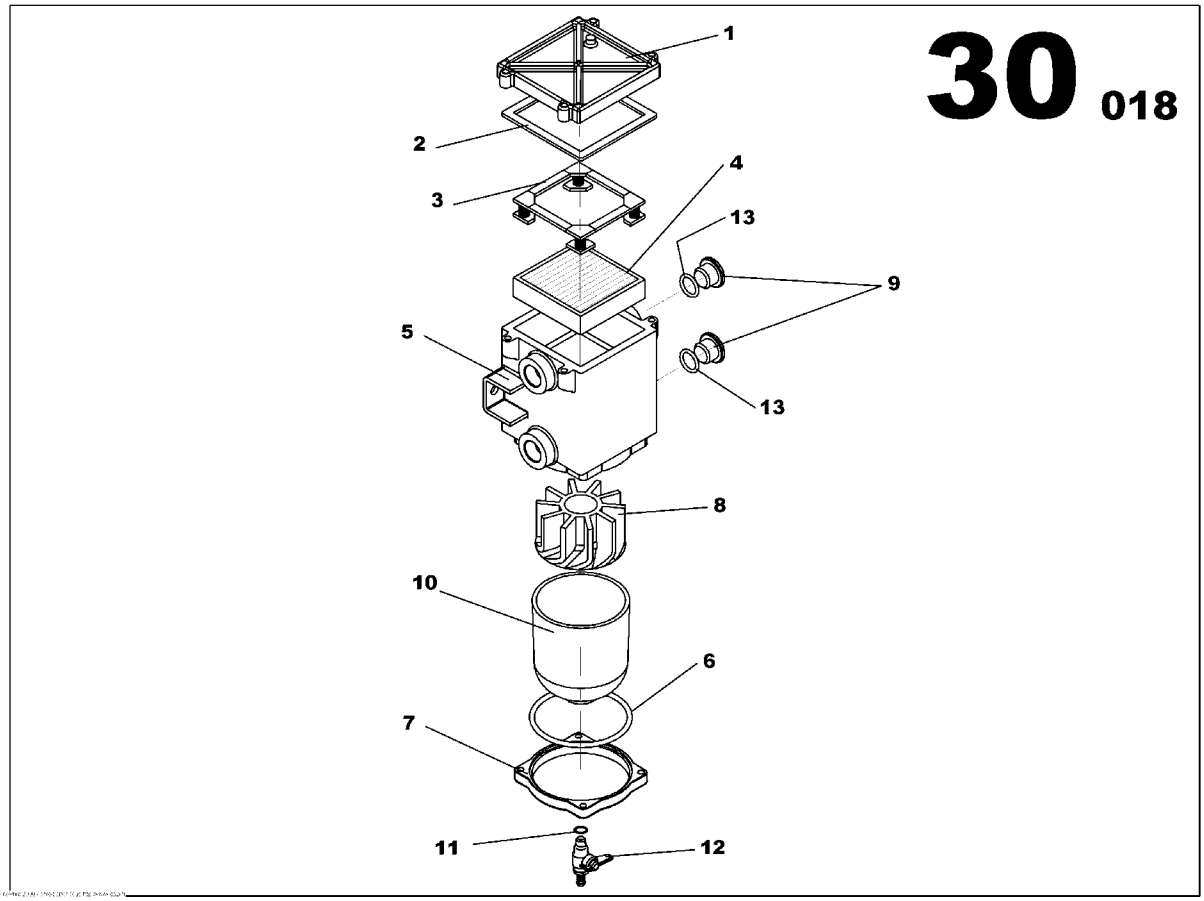

DECANTATION CARTRIDGE FILTER
85421451

Part numbers listed are only parts used in this model

Item	Part No.	Description	Qty	Un	From SN	To SN	Order PN	Page
1	85502557	COVER	1	UN			85502557	
2	85502581	SEPARATOR FILTER LID GASKET	1	UN			85502581	
3	85502599	SEPARATOR FILTER SPRING CASSETTE	1	UN			85502599	
4	85401644	SEPARATOR FILTER CARTRIDGE	1	UN			85401644	
5	85502946	SEPARATOR FILTER HOUSING	1	UN			85502946	
6	85502953	SEPARATOR FILTER BOWL GASKET	1	UN			85502953	
7	85502961	SEPARATOR FILTER BOWL RETAINER RING	1	UN			85502961	
8	85502979	SEPARATOR FILTER CENTRIFUGE	1	UN			85502979	
9	85502987	PLUG	2	UN			85502987	
10	85502995	SEPARATOR FILTER BOWL	1	UN			85502995	
11	85503001	SEPARATOR FILTER O-RING	1	UN			85503001	
12	85503019	SEPARATOR FILTER DRAIN COCK	1	UN			85503019	
13	85425551	GASKET D16x20	2	UN			85425551	

FUEL TANK ASSEMBLY

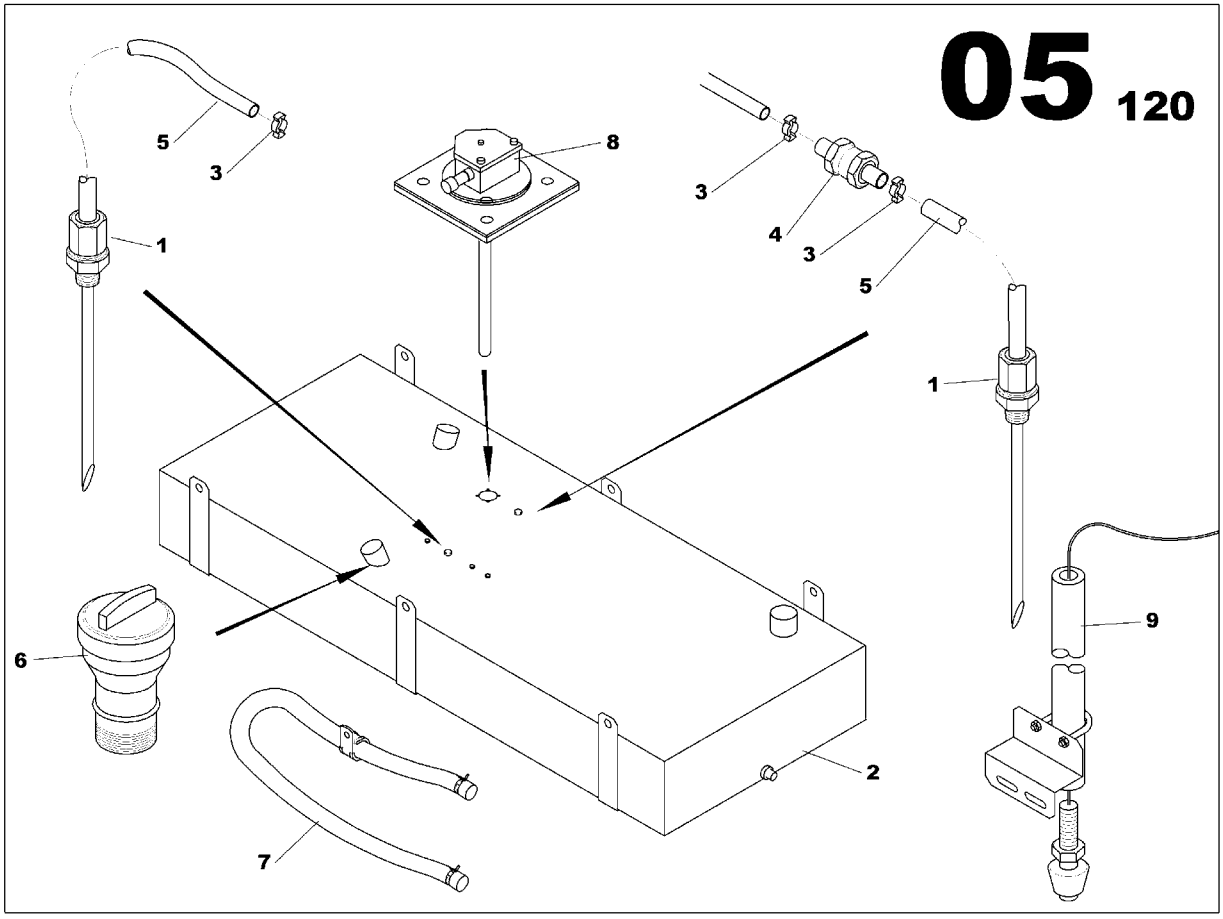

FUEL TANK ASSEMBLY
17137357

Part numbers listed are only parts used in this model

Item	Part No.	Description	Qty	Un	From SN	To SN	Order PN	Page
1	17137340	FUEL TANK ASSEMBLY	1	UN			17137340	73

FUEL TANK ASSEMBLY

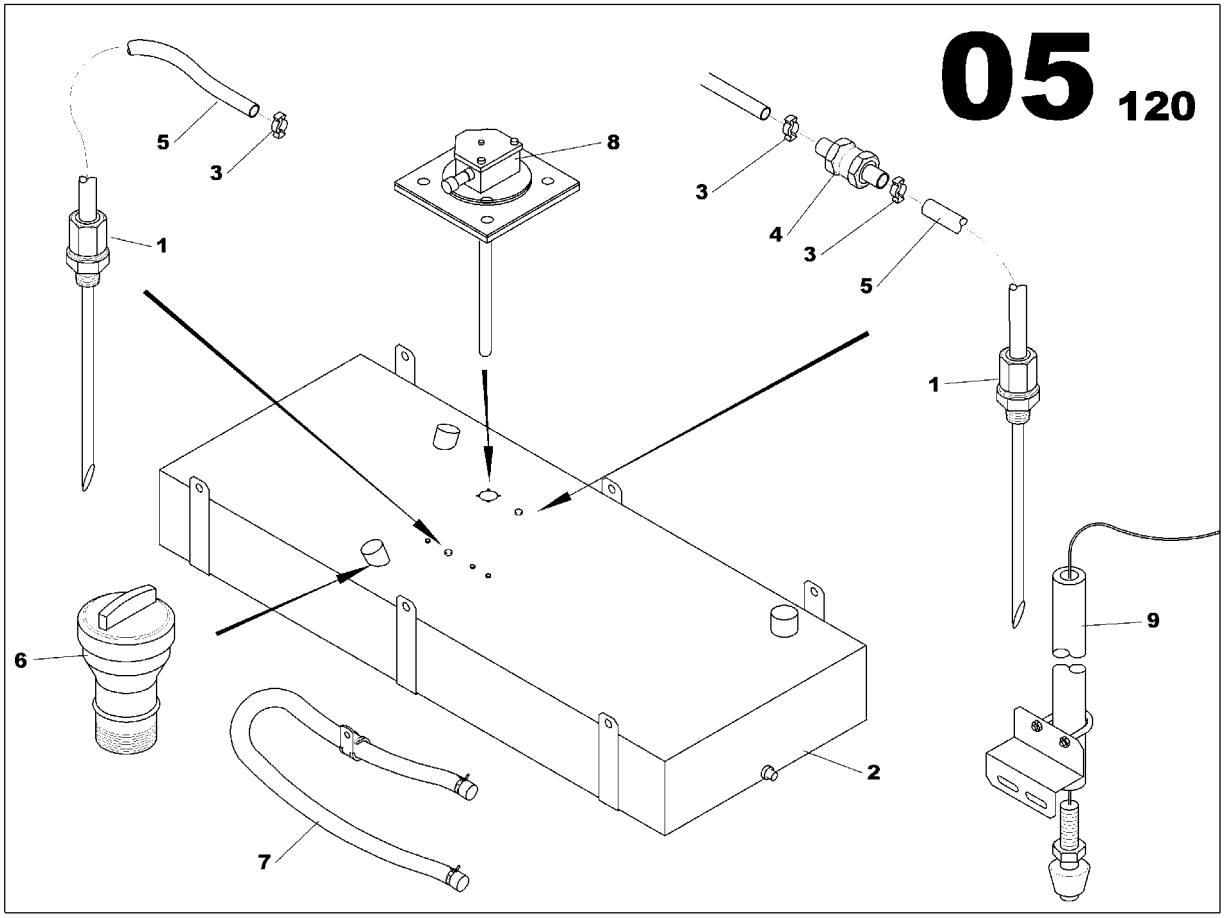

FUEL TANK ASSEMBLY
17137340

Part numbers listed are only parts used in this model

Item	Part No.	Description	Qty	Un	From SN	To SN	Order PN	Page
1	17137225	FUEL SUCCION PIPE L410 D12 1/2G	2	UN			17137225	
2	17137290	TANK 950L	1	UN			17137290	
3	85509727	SPRING CLAMP D17/19	6	UN			85509727	
4	85417632	NON RETURN VALVE	1	UN			85417632	
5	85430643	FLEXIBLE HOSE D9x15	1.5	ML			85430643	
6	85629541	FUEL FILLING FUNNEL BASE TANK	1	UN			85629541	75
7	17130196	COMBUSTIBLE VENT TANK ASSEMBLY	1	UN			17130196	77
8	85404580	TRANS. FUEL LEVEL ASSEMBLY	1	UN			85404580	79
9	17131673	LEAKAGE DETECTION RETENTION BUND ASSEMBLY	1	UN			17131673	81

FUEL FILLING FUNNEL BASE TANK

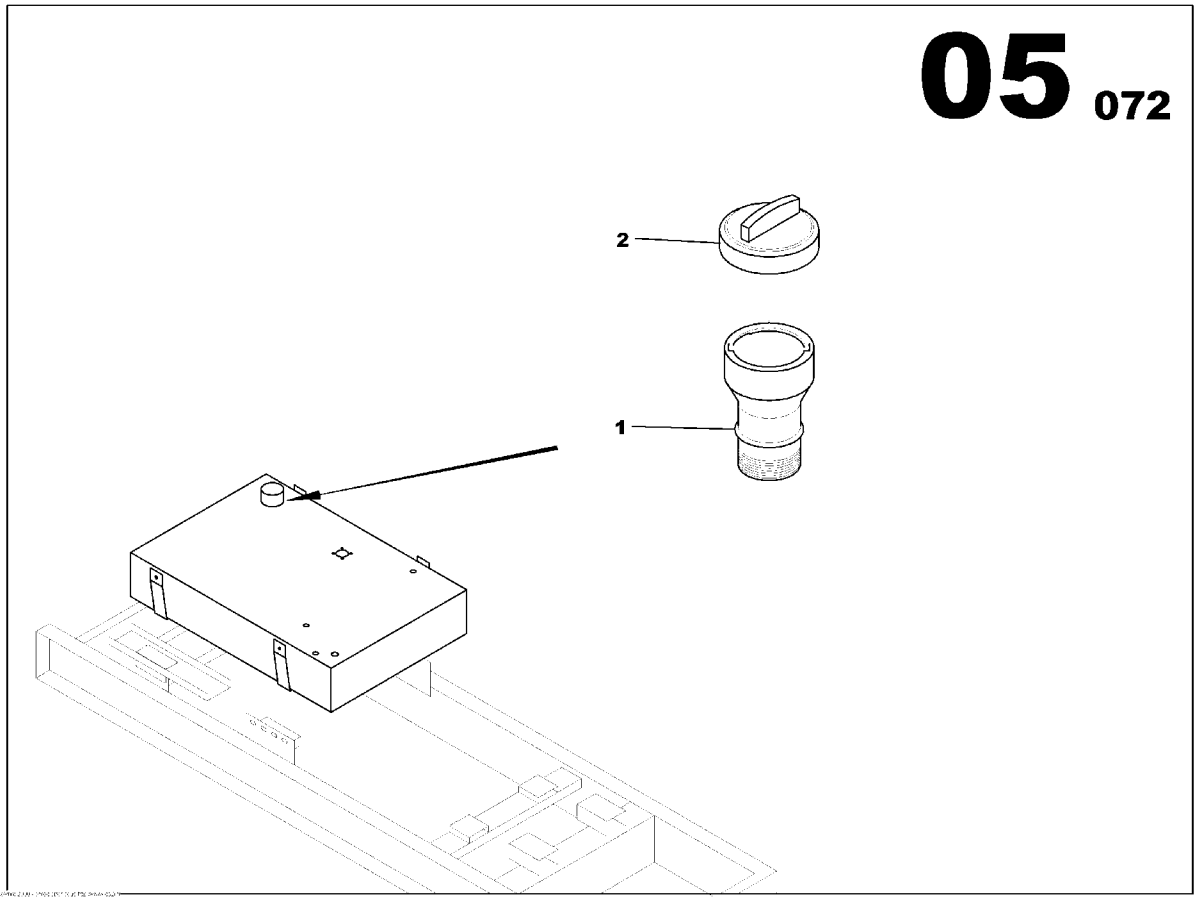

FUEL FILLING FUNNEL BASE TANK
85629541

Part numbers listed are only parts used in this model

Item	Part No.	Description	Qty	Un	From SN	To SN	Order PN	Page
1	85403517	FUEL FILLING FUNNEL BASE TANK	1	UN			85403517	
2	85509222	TANK CAP	1	UN			85509222	

COMBUSTIBLE VENT TANK ASSEMBLY

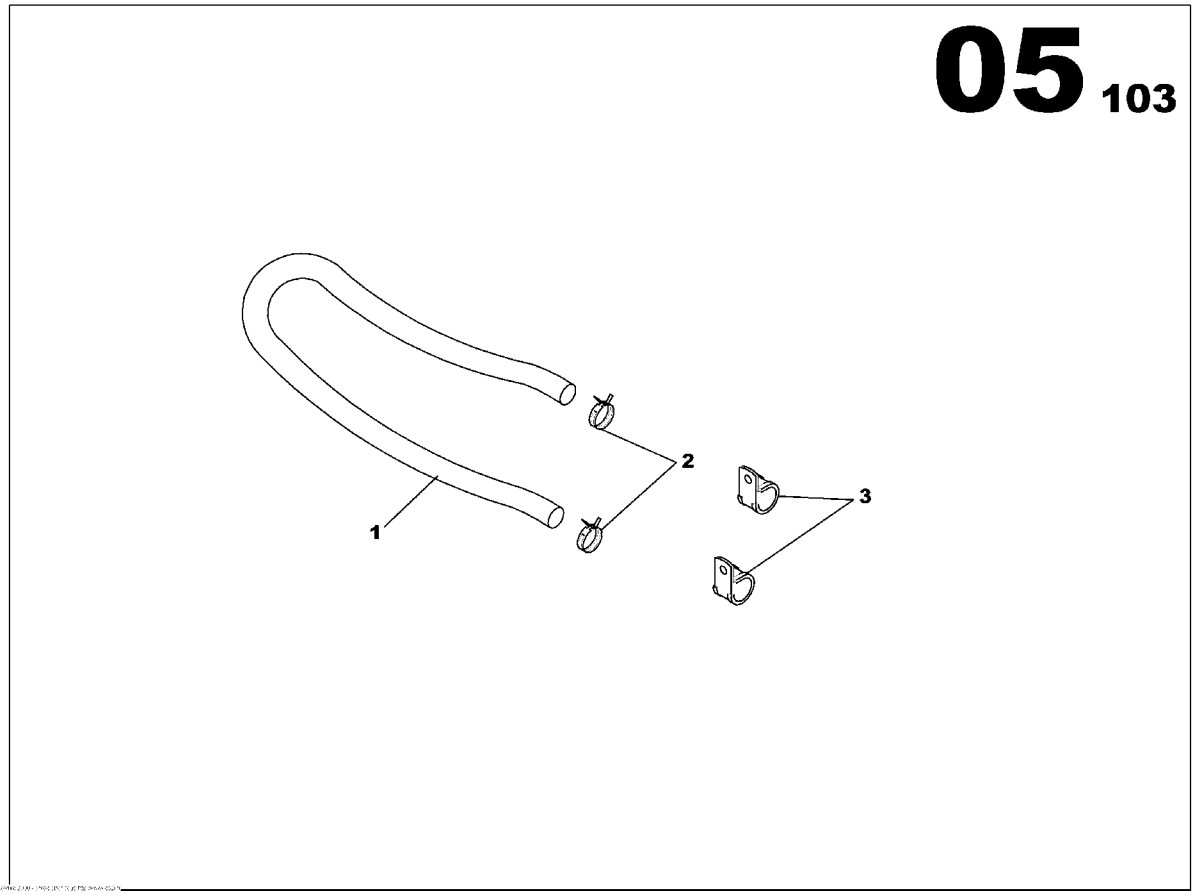

COMBUSTIBLE VENT TANK ASSEMBLY
17130196

Part numbers listed are only parts used in this model

Item	Part No.	Description	Qty	Un	From SN	To SN	Order PN	Page
1	85416436	FLEXIBLE HOSE D8x14	1	ML			85416436	
2	17130824	SPRING CLAMP D10/13	1	UN			17130824	
3	17130816	CLAMP D20	2	UN			17130816	

TRANS. FUEL LEVEL ASSEMBLY

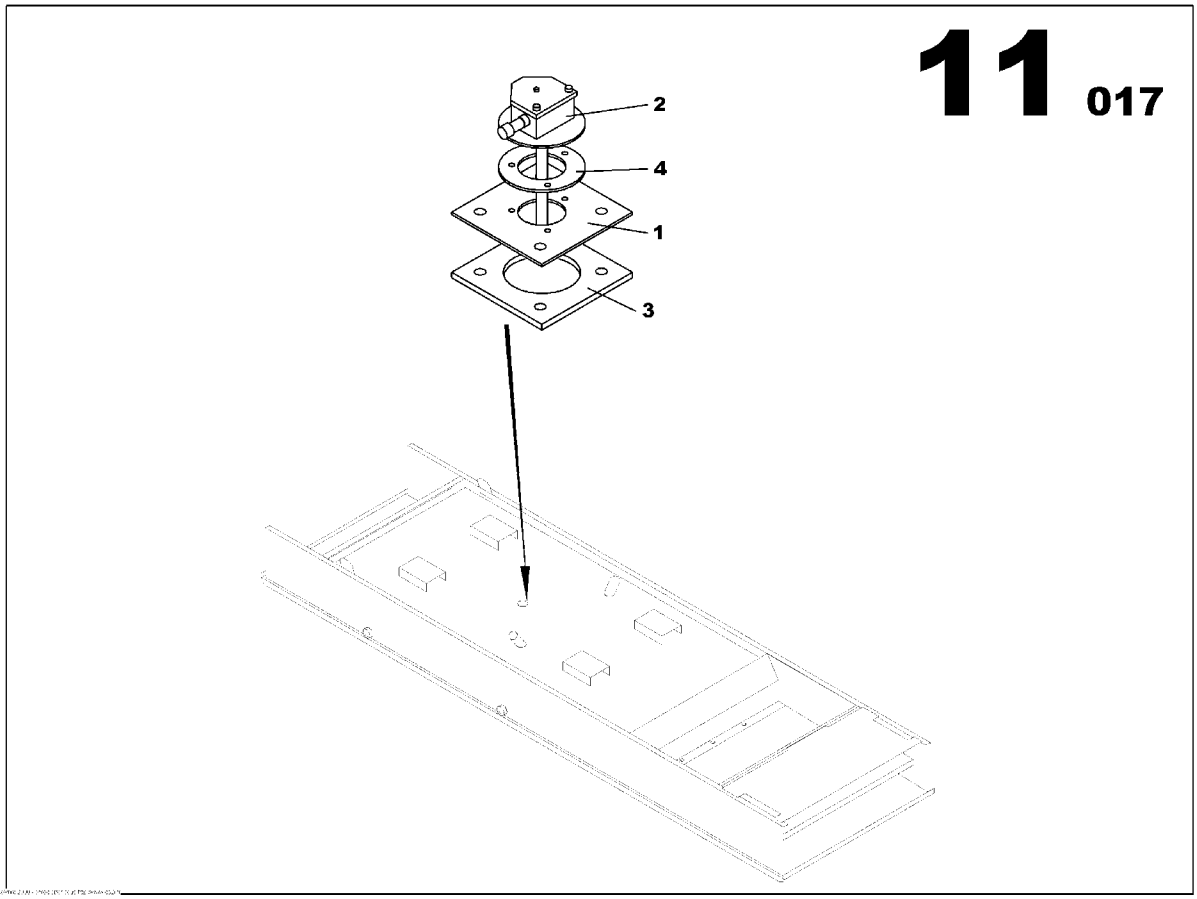

TRANS. FUEL LEVEL ASSEMBLY
85404580

Part numbers listed are only parts used in this model

Item	Part No.	Description	Qty	Un	From SN	To SN	Order PN	Page
1	85403509	LEVEL SENSOR ADAPTER	1	UN			85403509	
2	85404572	LEVEL SENSOR	1	UN			85404572	
3	85409068	SQARE FLANGE GASKET	1	UN			85409068	
4	85409076	ROUND FLANGE GASKET	1	UN			85409076	

LEAKAGE DETECTION RETENTION BUND ASSEMBLY

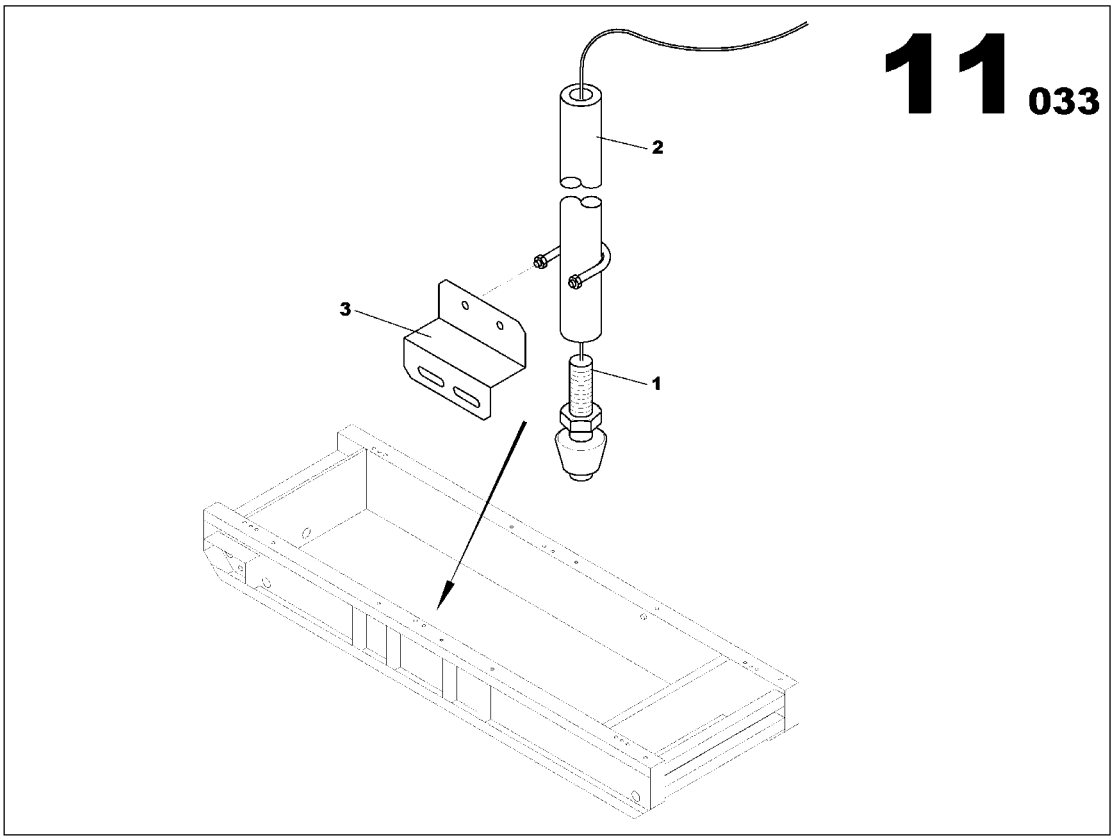

LEAKAGE DETECTION RETENTION BUND ASSEMBLY
17131673

Part numbers listed are only parts used in this model

Item	Part No.	Description	Qty	Un	From SN	To SN	Order PN	Page
1	85417459	LEVEL SWITCH	1	UN			85417459	
2	17132317	LEVEL SWITCH BRACKET	1	UN			17132317	
3	17132325	LEVEL SWITCH BRACKET	1	UN			17132325	

STARTING FUNCTION

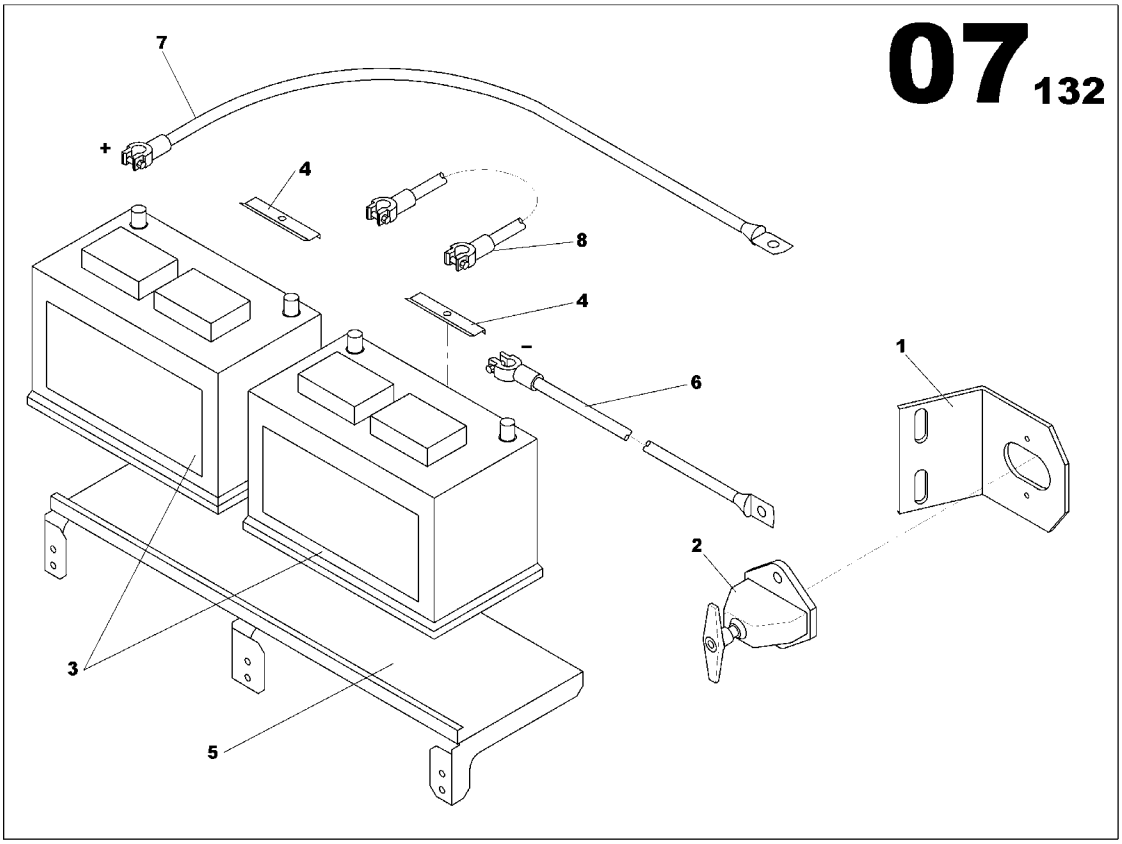

STARTING FUNCTION

Part numbers listed are only parts used in this model

Item	Part No.	Description	Qty	Un	From SN	To SN	Order PN	Page
1	17137662	ELECTRIC STARTER ASSEMBLY	1	UN			17137662	85

ELECTRIC STARTER ASSEMBLY

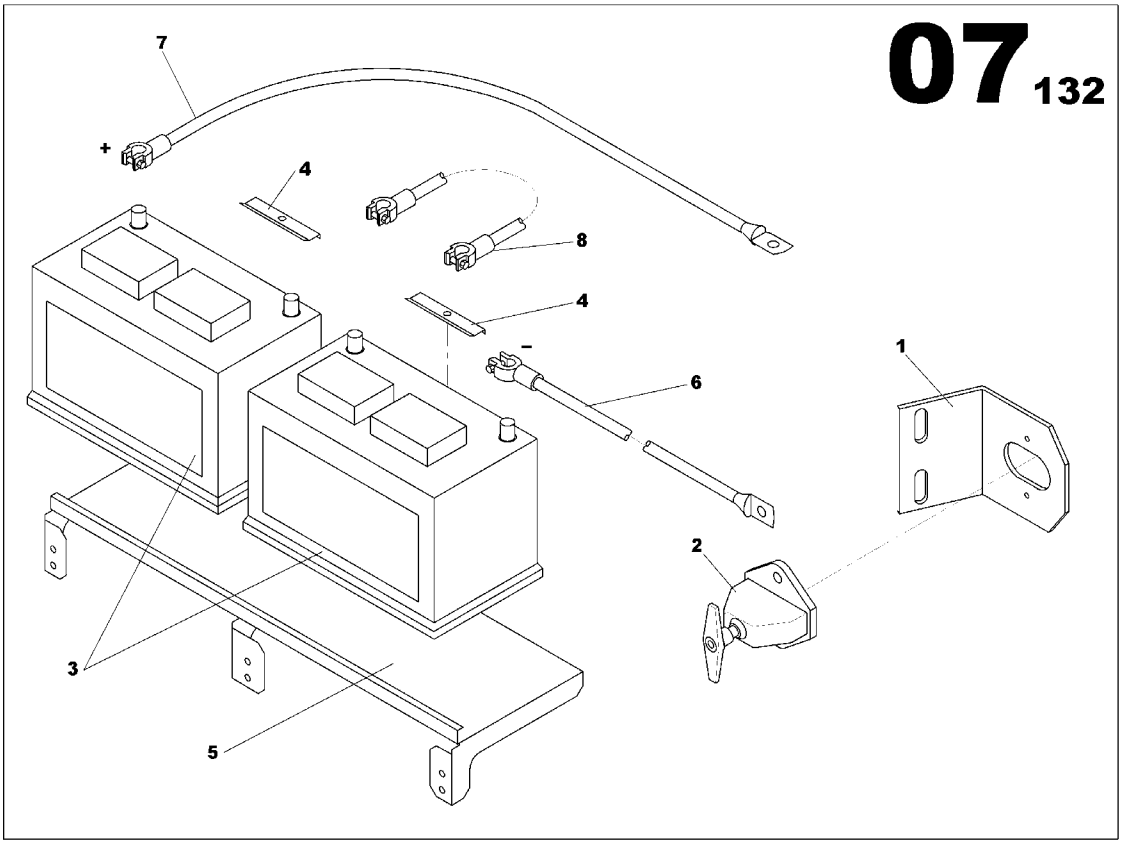

ELECTRIC STARTER ASSEMBLY
17137662

Part numbers listed are only parts used in this model

Item	Part No.	Description	Qty	Un	From SN	To SN	Order PN	Page
1	17137654	ELECTRIC STARTER ASSEMBLY	1	UN			17137654	87

ELECTRIC STARTER ASSEMBLY

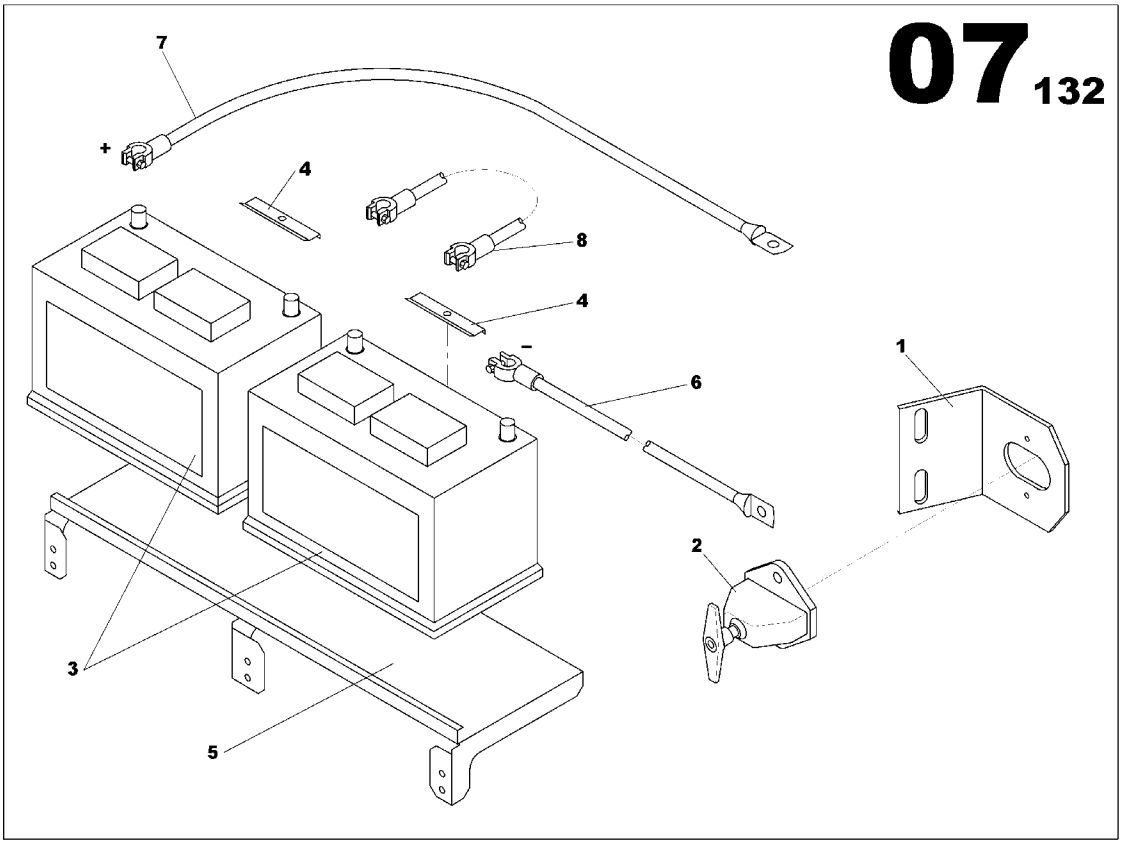

ELECTRIC STARTER ASSEMBLY
17137654

Part numbers listed are only parts used in this model

Item	Part No.	Description	Qty	Un	From SN	To SN	Order PN	Page
1	85403707	BATTERY ISOLATOR BRACKET	1	UN			85403707	
2	85403723	BATTERY ISOLATOR SWITCH	1	UN			85403723	
3	85403731	STARTING BATTERY 12V 100Ah 450A	2	UN	0	04007706	85403731	
3	17137639	STARTING BATTERY 12V 100Ah 760A	2	UN	04007707		17137639	
4	85633436	BATTERY FIXING BRACKET	2	UN			85633436	
5	17137597	BATTERY SUPPORT BRACKET	1	UN			17137597	
6	85630580	BATTERY CABLE(-) 70mm2 L700 BLACK	1	UN			85630580	
7	85417277	BATTERY CABLE(+) 70mm2 L700 RED	1	UN			85417277	
8	85417202	LEFT BATTERY CABLE 50mm2 L195 BLACK	1	UN			85417202	

EXHAUST FUNCTION

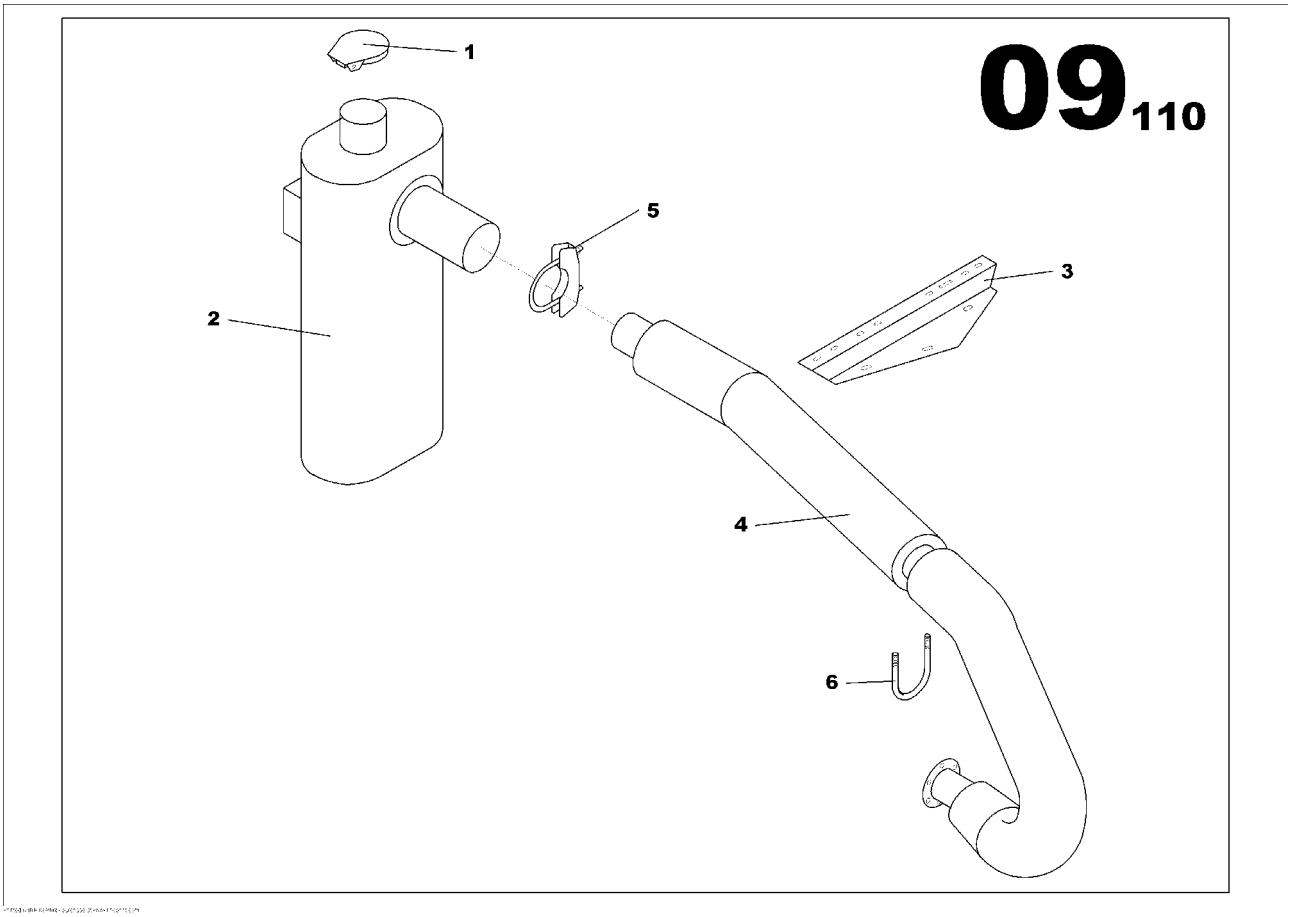

EXHAUST FUNCTION

Part numbers listed are only parts used in this model

Item	Part No.	Description	Qty	Un	From SN	To SN	Order PN	Page
1	85427052	HOT SPOT GUARDS ASSEMBLY	1	UN			85427052	
2	17137803	EXHAUST MUFFLER M227 ASSEMBLY	1	UN			17137803	91

EXHAUST MUFFLER M227 ASSEMBLY

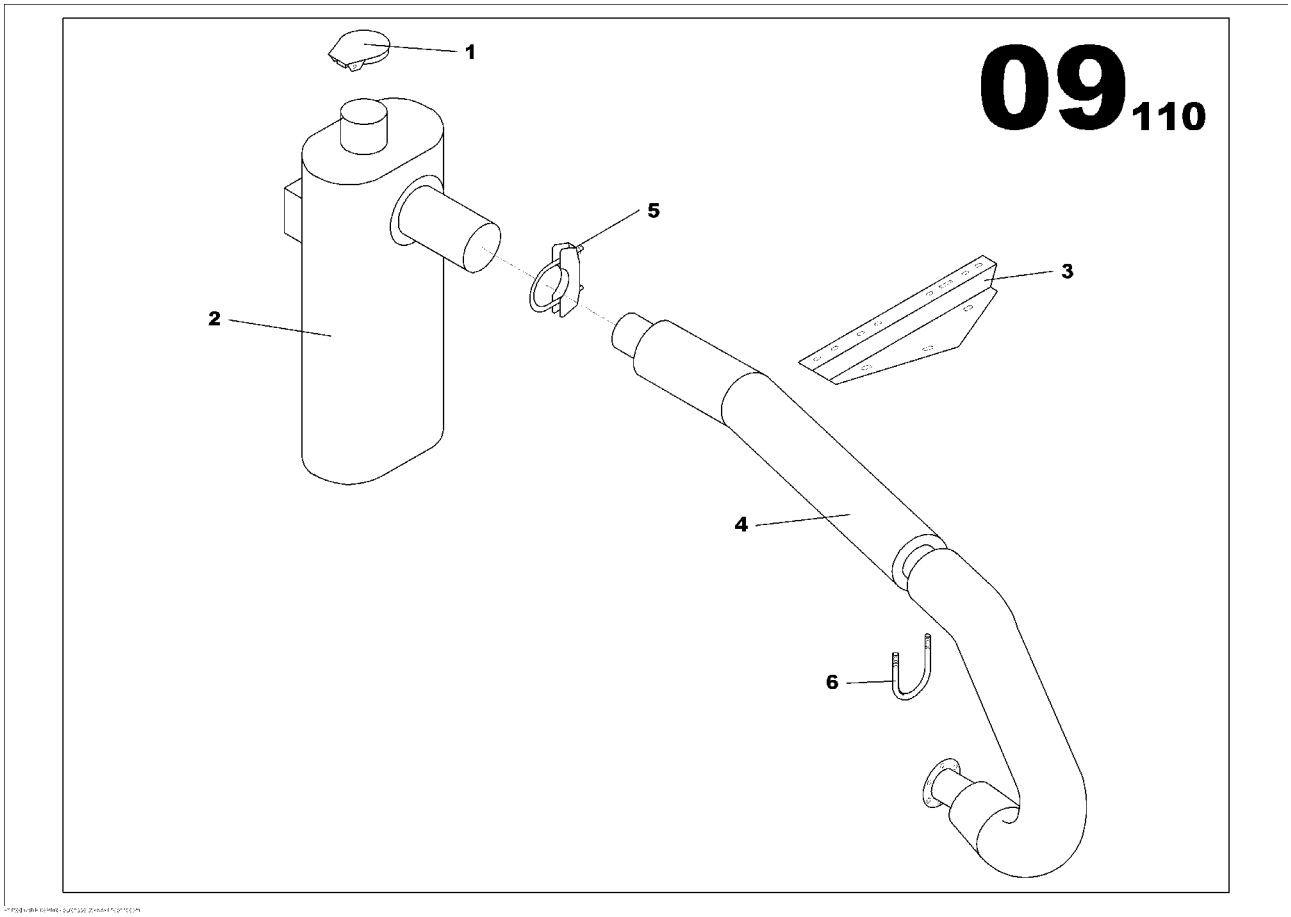

EXHAUST MUFFLER M227 ASSEMBLY
17137803

Part numbers listed are only parts used in this model

Item	Part No.	Description	Qty	Un	From SN	To SN	Order PN	Page
1	85629830	EXHAUST RAIN FLAP D170	1	UN			85629830	
2	85629855	40dB MUFFLER M227 CANOPY	1	UN			85629855	
3	17137977	EXHAUST HOSE M227 BRACKET	1	UN			17137977	
4	17137985	EXHAUST PIPE D140 VO M227	1	UN			17137985	
5	85417780	HOSE CLAMP D140	1	UN			85417780	
6	85417764	HOSE CLAMP D140	1	UN			85417764	

FRAME FUNCTION

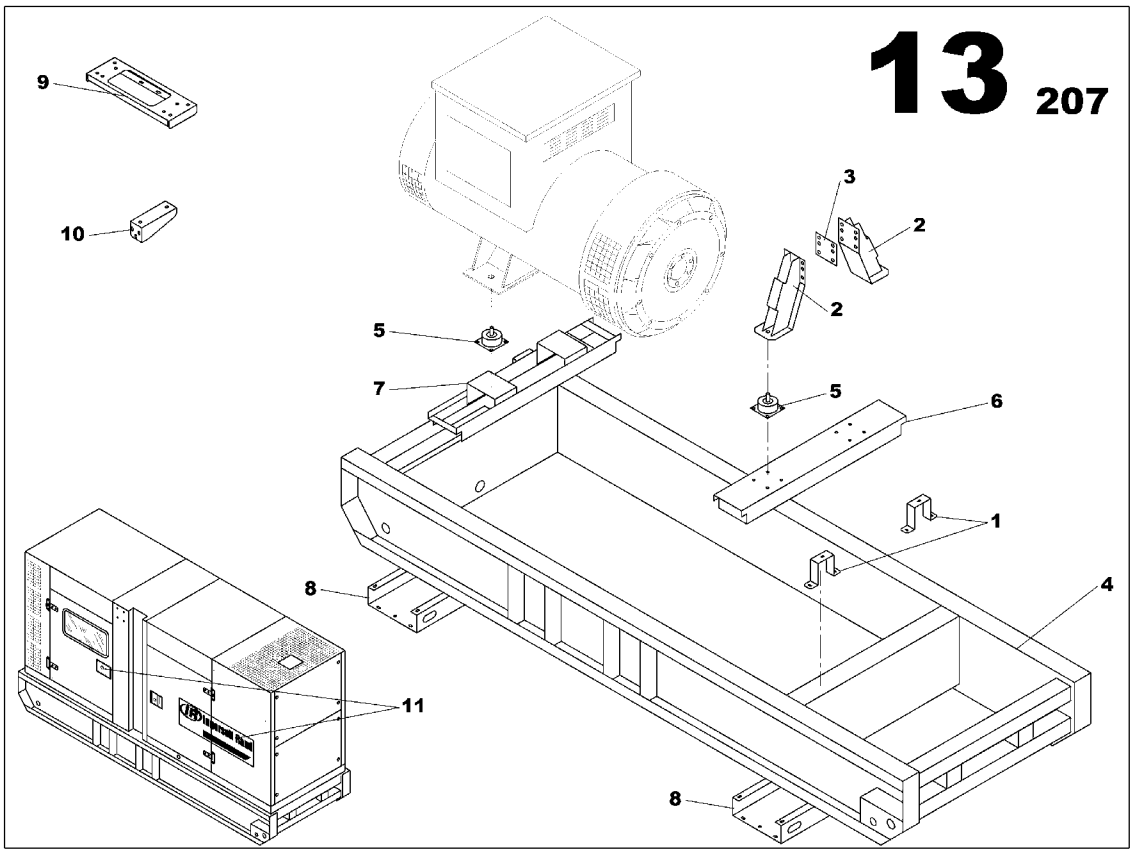

FRAME FUNCTION

Part numbers listed are only parts used in this model

Item	Part No.	Description	Qty	Un	From SN	To SN	Order PN	Page
1	17138066	FRAME ASSEMBLY	1	UN			17138066	95
2	85428076	G270 ACCESSORY ASSEMBLY	1	UN			85428076	99

FRAME ASSEMBLY

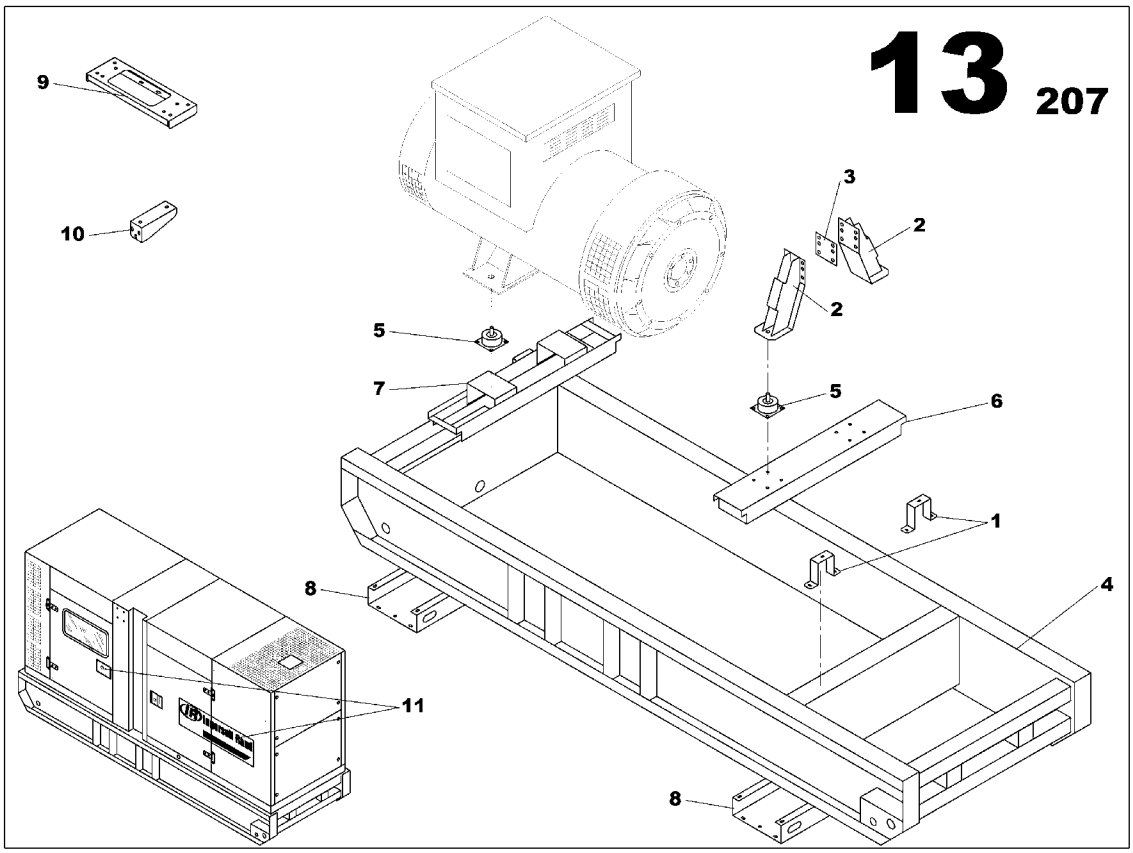

FRAME ASSEMBLY
17138066

Part numbers listed are only parts used in this model

Item	Part No.	Description	Qty	Un	From SN	To SN	Order PN	Page
1	17138058	FRAME M227 ASSEMBLY	1	UN			17138058	97

FRAME M227 ASSEMBLY

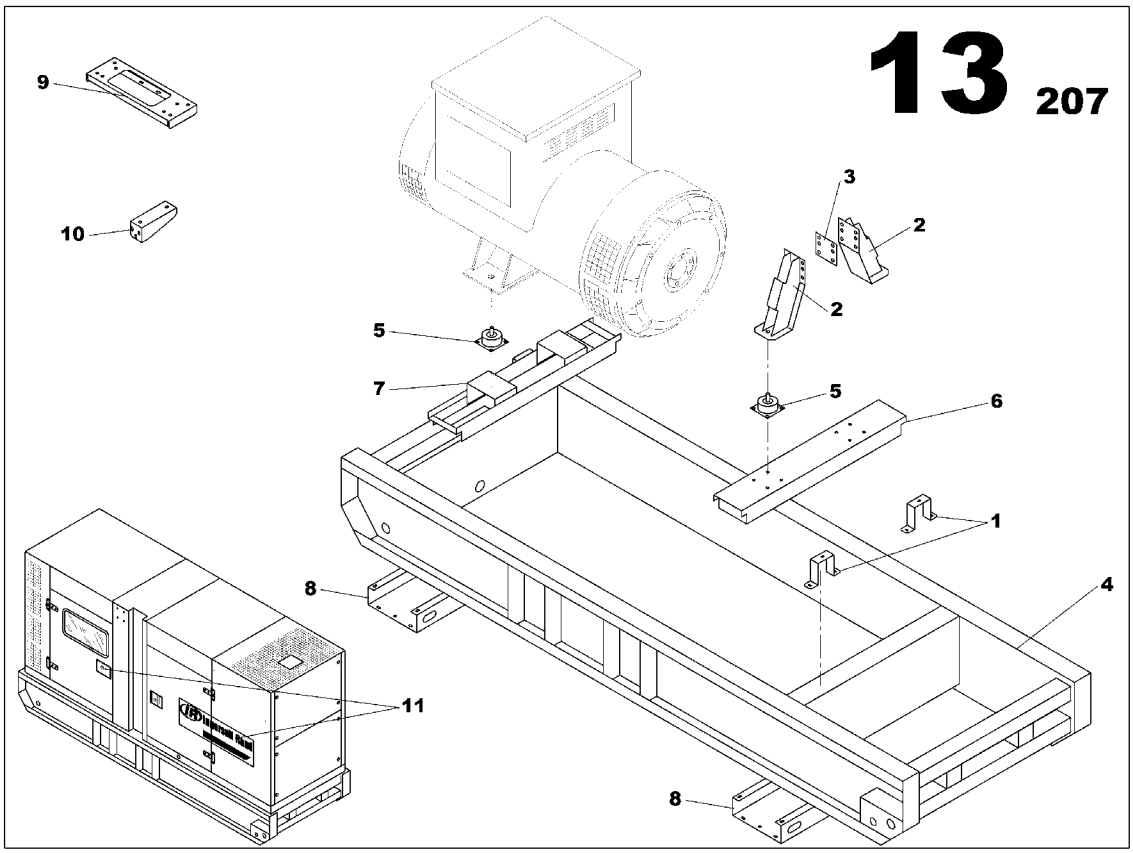

FRAME M227 ASSEMBLY
17138058

Part numbers listed are only parts used in this model

Item	Part No.	Description	Qty	Un	From SN	To SN	Order PN	Page
1	17137076	RADIATOR BRACKET	2	UN			17137076	
2	85423960	ENGINE SUPPORT VO 06/07L LEFT RIGHT SIDE	2	UN			85423960	
3	85417392	SHIM	1	UN			85417392	
4	17138025	FRAME JD 6081HF M227	1	UN			17138025	
5	85401875	ANTI-VIBRATION MOUNT 0800daN 8.5mm	4	UN			85401875	
6	17138330	ENGINE TRAVERSE M227	1	UN			17138330	
7	17138348	ALTERNATOR TRAVERSE M227	1	UN			17138348	
8	17138439	FORK LIFT CHANNEL	2	UN			17138439	
9	17132218	CONTROL PANEL BRACKET M227	1	UN			17132218	
10	17139973	AIPR BRACKET	1	UN			17139973	
11	85428076	G270 ACCESSORY ASSEMBLY	1	UN			85428076	99

G270 ACCESSORY ASSEMBLY

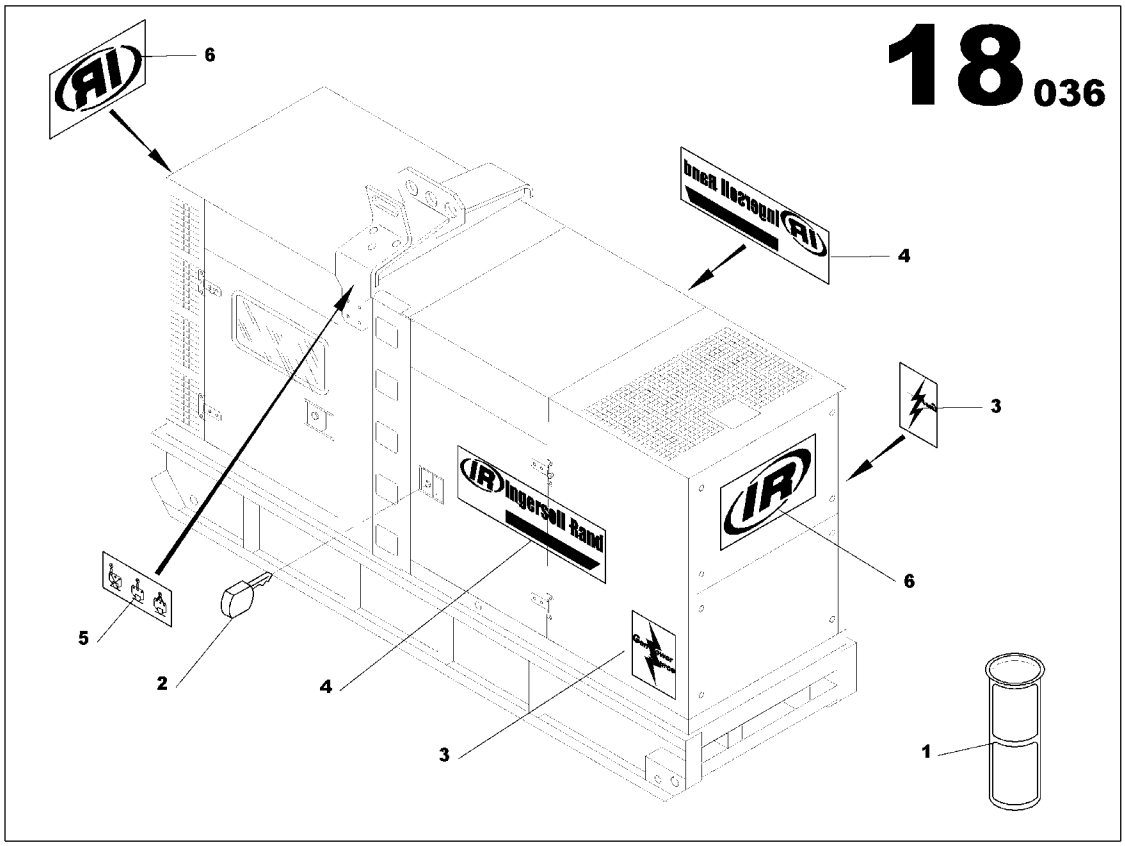

G270 ACCESSORY ASSEMBLY
85428076

Part numbers listed are only parts used in this model

Item	Part No.	Description	Qty	Un	From SN	To SN	Order PN	Page
1	85633386	FUEL FILTER-SCREEN	1	UN			85633386	
2	85509263	WBH LATCHE KEY	1	UN			85509263	
3	85506467	STICKER	1	UN			85506467	
4	85503852	STICKER G270	2	UN			85503852	
5	22207054	STICKER OPERATING INSTRUCTIONS	1	UN			22207054	
6	85631927	DECALS ASSEMBLY	1	UN			85631927	101

DECALS ASSEMBLY

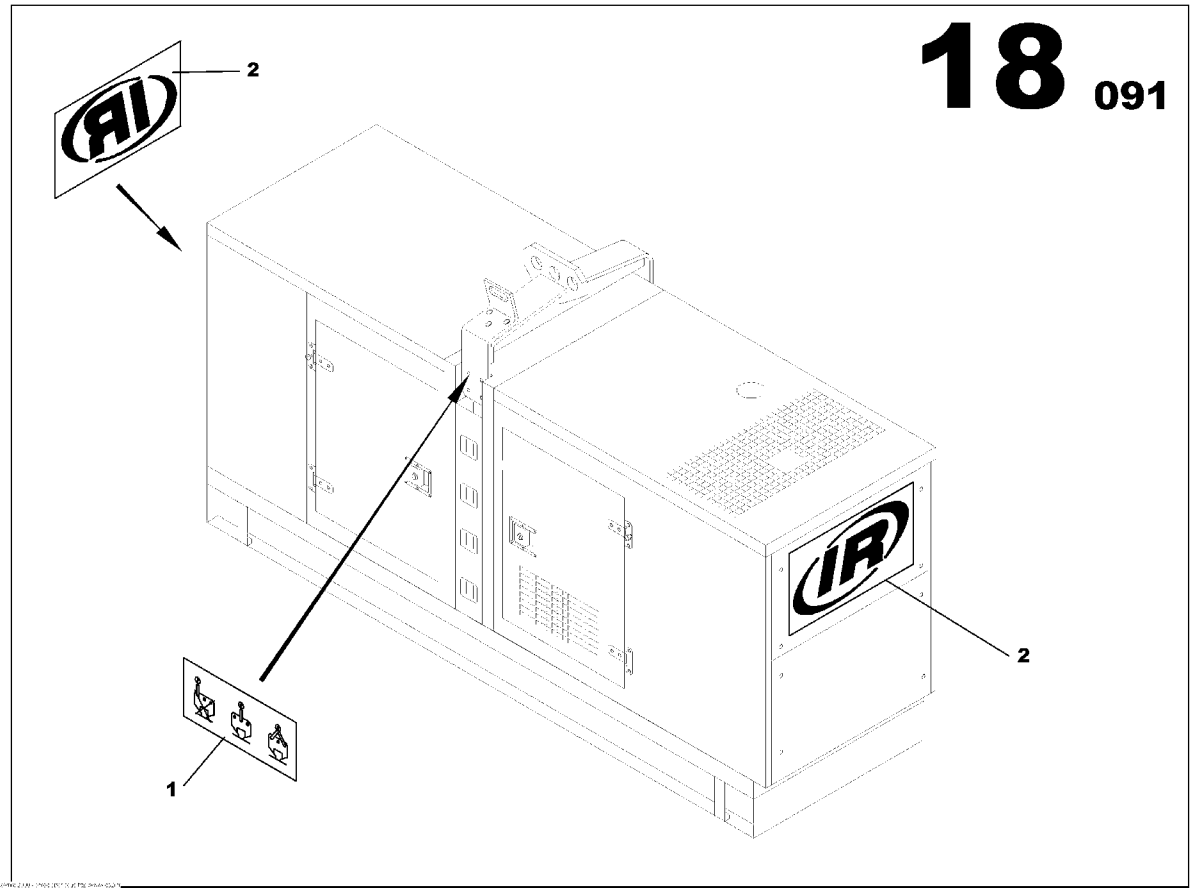

DECALS ASSEMBLY
85631927

Part numbers listed are only parts used in this model

Item	Part No.	Description	Qty	Un	From SN	To SN	Order PN	Page
1	85500213	STICKER IR	2	UN			85500213	
2	85623684	STICKER CANOPY MANUTENTION SYMBOL	1	UN			85623684	

G270 ACCESSORY ASSEMBLY

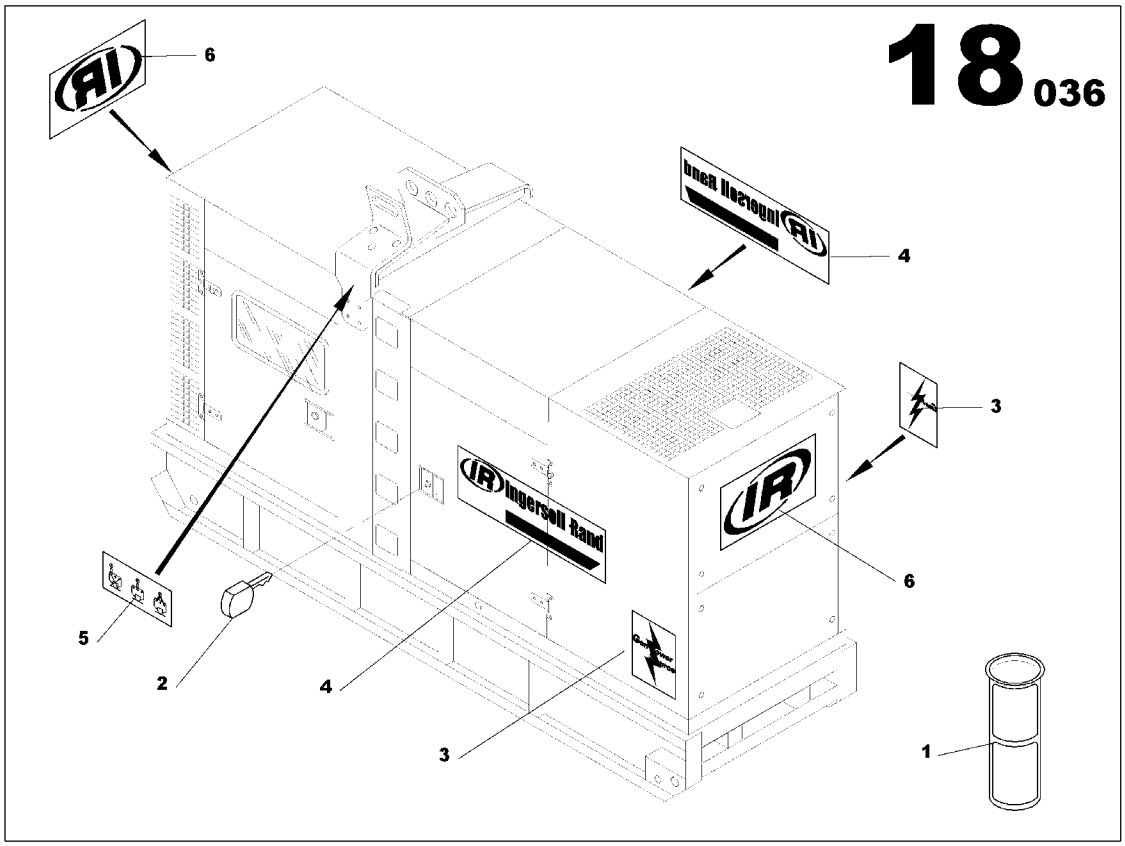

G270 ACCESSORY ASSEMBLY
85428076

Part numbers listed are only parts used in this model

Item	Part No.	Description	Qty	Un	From SN	To SN	Order PN	Page
1	85633386	FUEL FILTER-SCREEN	1	UN			85633386	
2	85509263	WBH LATCHE KEY	1	UN			85509263	
3	85506467	STICKER	1	UN			85506467	
4	85503852	STICKER G270	2	UN			85503852	
5	22207054	STICKER OPERATING INSTRUCTIONS	1	UN			22207054	
6	85631927	DECALS ASSEMBLY	1	UN			85631927	105

DECALS ASSEMBLY

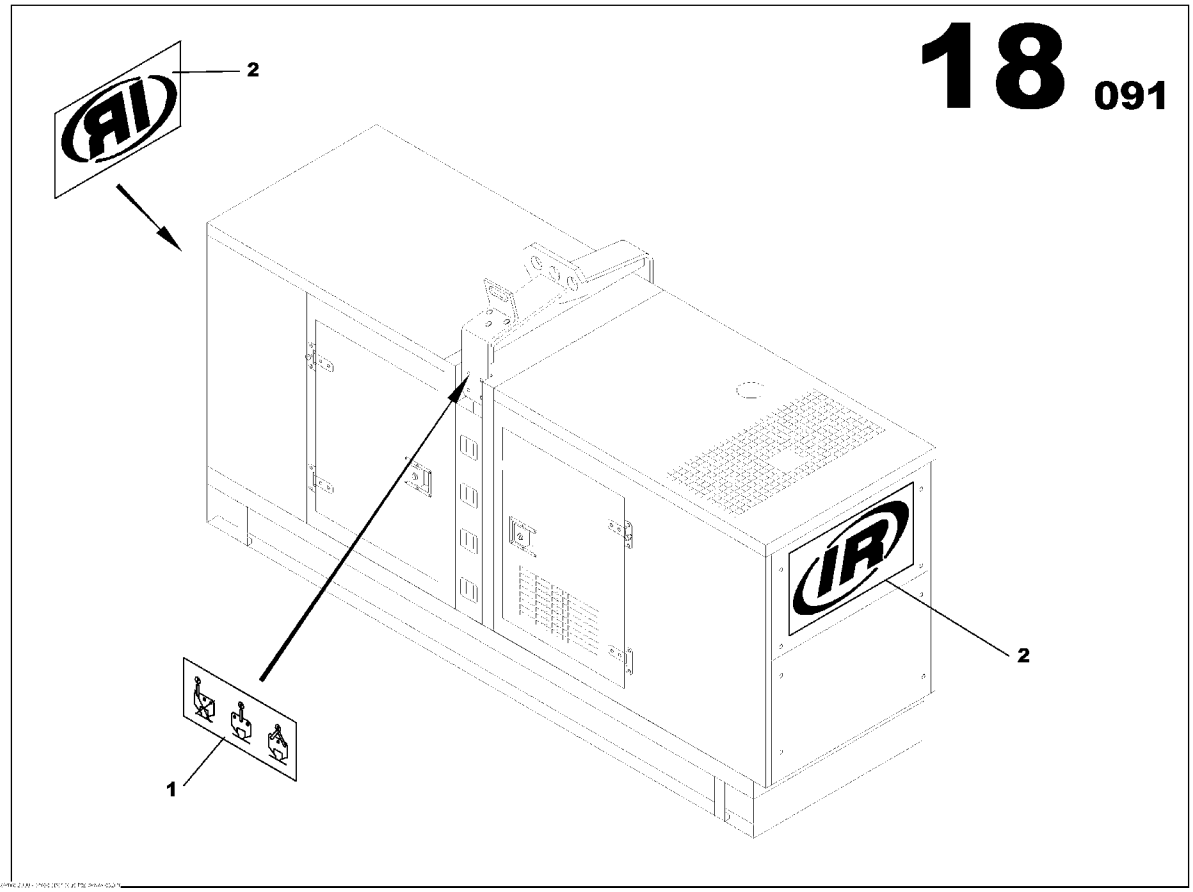

DECALS ASSEMBLY
85631927

Part numbers listed are only parts used in this model

Item	Part No.	Description	Qty	Un	From SN	To SN	Order PN	Page
1	85500213	STICKER IR	2	UN			85500213	
2	85623684	STICKER CANOPY MANUTENTION SYMBOL	1	UN			85623684	

CANOPY FUNCTION

Non illustré
Not illustrated

CANOPY FUNCTION

Part numbers listed are only parts used in this model

Item	Part No.	Description	Qty	Un	From SN	To SN	Order PN	Page
1	17138082	FITTINGS M227 VO TAD740GE ASSEMBLY	1	UN			17138082	109
2	17138769	CANOPY M227 ASSEMBLY	1	UN			17138769	121
3	17139437	CENTRAL LIFTING ARCH ASSEMBLY	1	UN			17139437	127
4	85634616	EMERGENCY STOP PANEL ASSEMBLY	1	UN			85634616	
5	85407906	EARTH ROD WITH CABLE CANOPY ASSEMBLY	1	UN			85407906	131

FITTINGS M227 VO TAD740GE ASSEMBLY

Non illustré
Not illustrated

FITTINGS M227 VO TAD740GE ASSEMBLY
17138082

Part numbers listed are only parts used in this model

Item	Part No.	Description	Qty	Un	From SN	To SN	Order PN	Page
1	17138074	M227 MISCELLANEOUS ASSEMBLY	1	UN			17138074	111

M227 MISCELLANEOUS ASSEMBLY

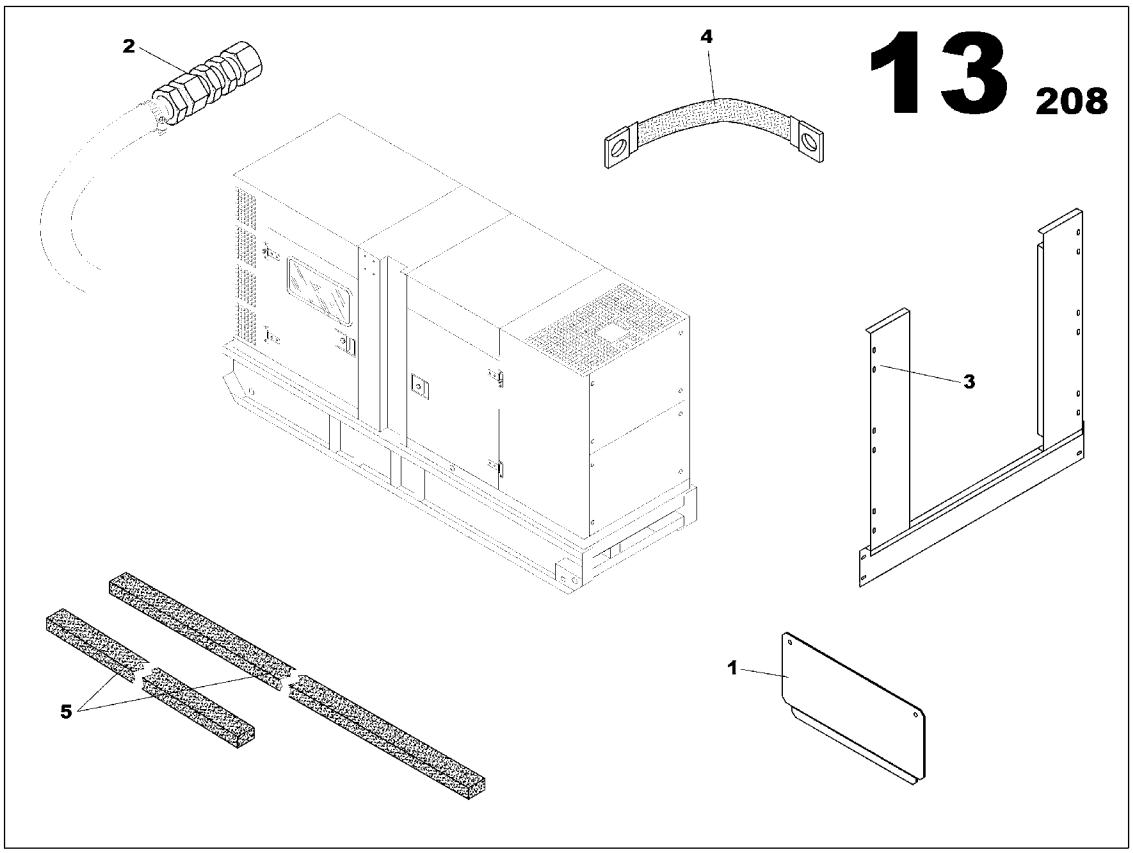

M227 MISCELLANEOUS ASSEMBLY
17138074

Part numbers listed are only parts used in this model

Item	Part No.	Description	Qty	Un	From SN	To SN	Order PN	Page
1	17139809	CABLE OUTLET PLATE	1	UN			17139809	
2	17137175	OIL CRANKCASE	1	UN			17137175	113
3	17138983	RADIATOR BASE M227 PLATE ASSEMBLY	1	UN			17138983	115
4	85407922	GROUND WIRES ASSEMBLY	1	UN			85407922	117
5	17140997	CANOPY/FRAME M227 GASKET ASSEMBLY	1	UN			17140997	119

OIL CRANKCASE

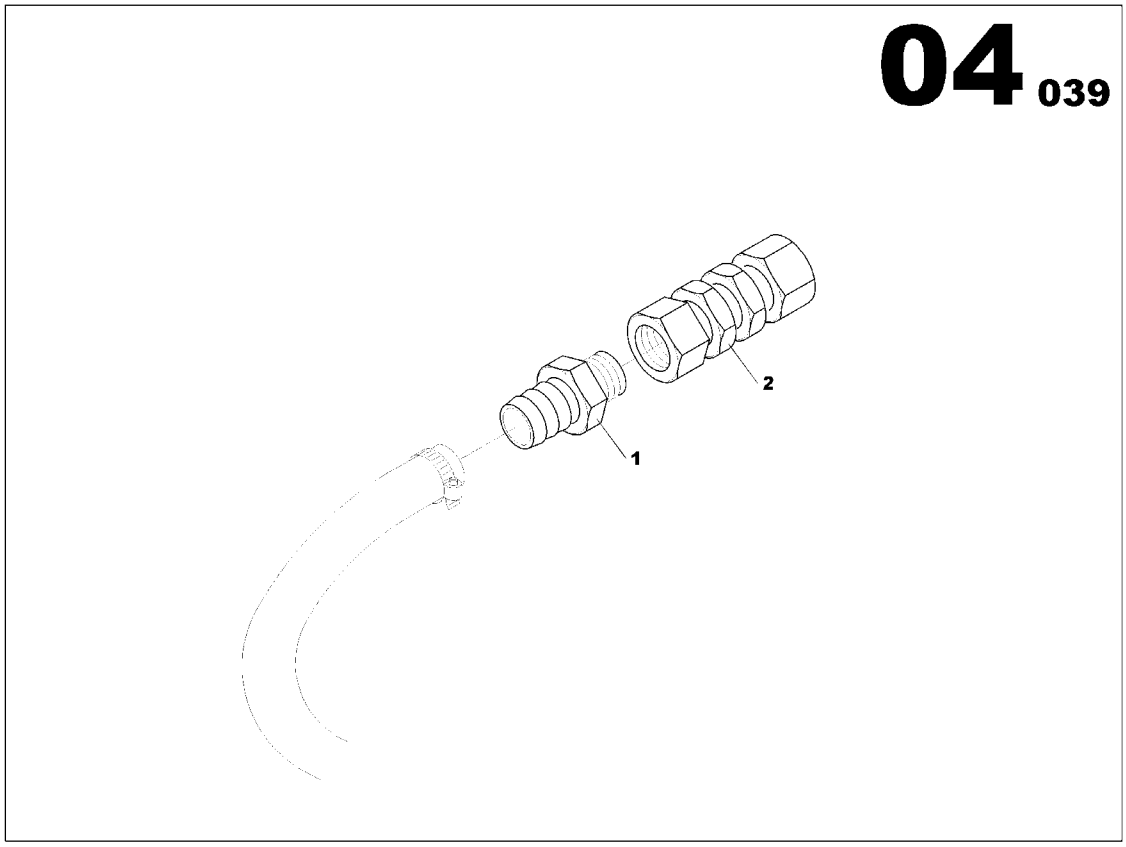

OIL CRANKCASE
17137175

Part numbers listed are only parts used in this model

Item	Part No.	Description	Qty	Un	From SN	To SN	Order PN	Page
1	17140955	PIPE UNION MAL/MAL 1G	1	UN			17140955	
2	17140971	PIPE UNION FEM/FEM 1G	1	UN			17140971	

RADIATOR BASE M227 PLATE ASSEMBLY

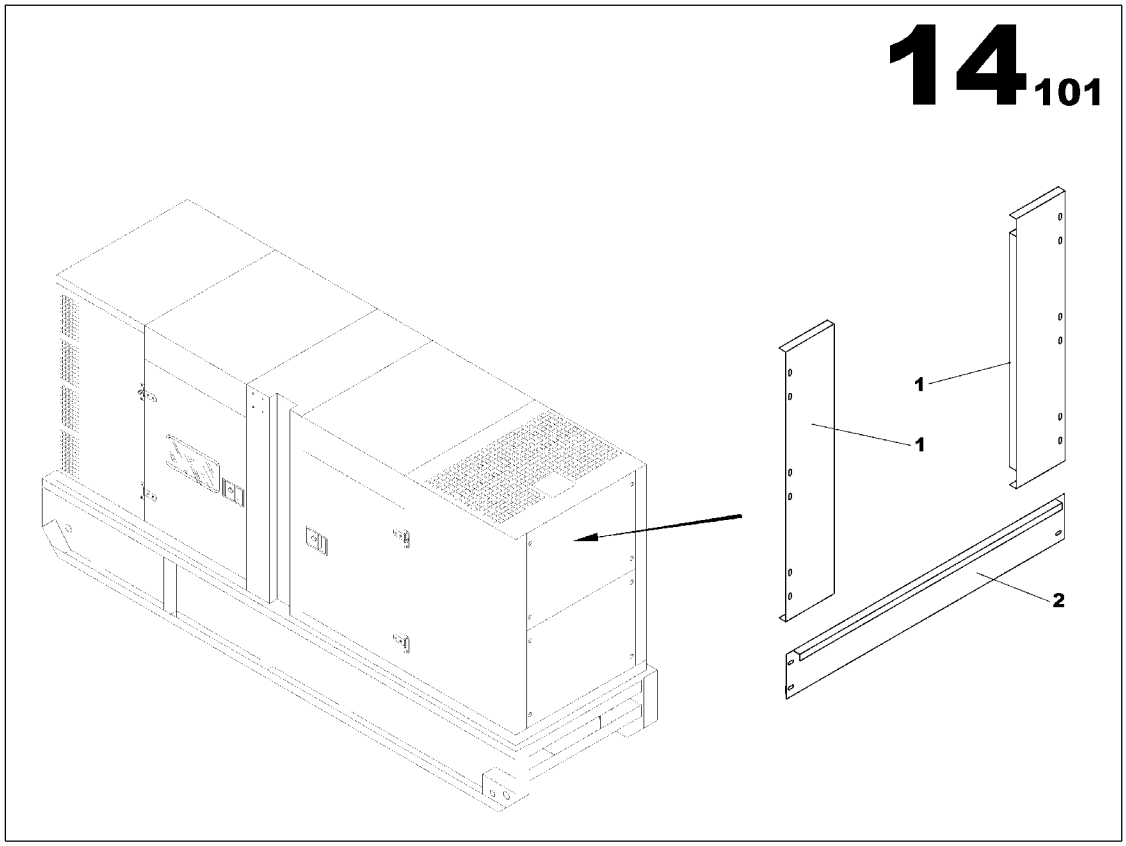

RADIATOR BASE M227 PLATE ASSEMBLY
17138983

Part numbers listed are only parts used in this model

Item	Part No.	Description	Qty	Un	From SN	To SN	Order PN	Page
1	17138967	RADIATOR PANEL LOWER M227	1	UN			17138967	
2	17138975	RADIATOR LEFT/RIGHT PANEL M227	2	UN			17138975	

GROUND WIRES ASSEMBLY

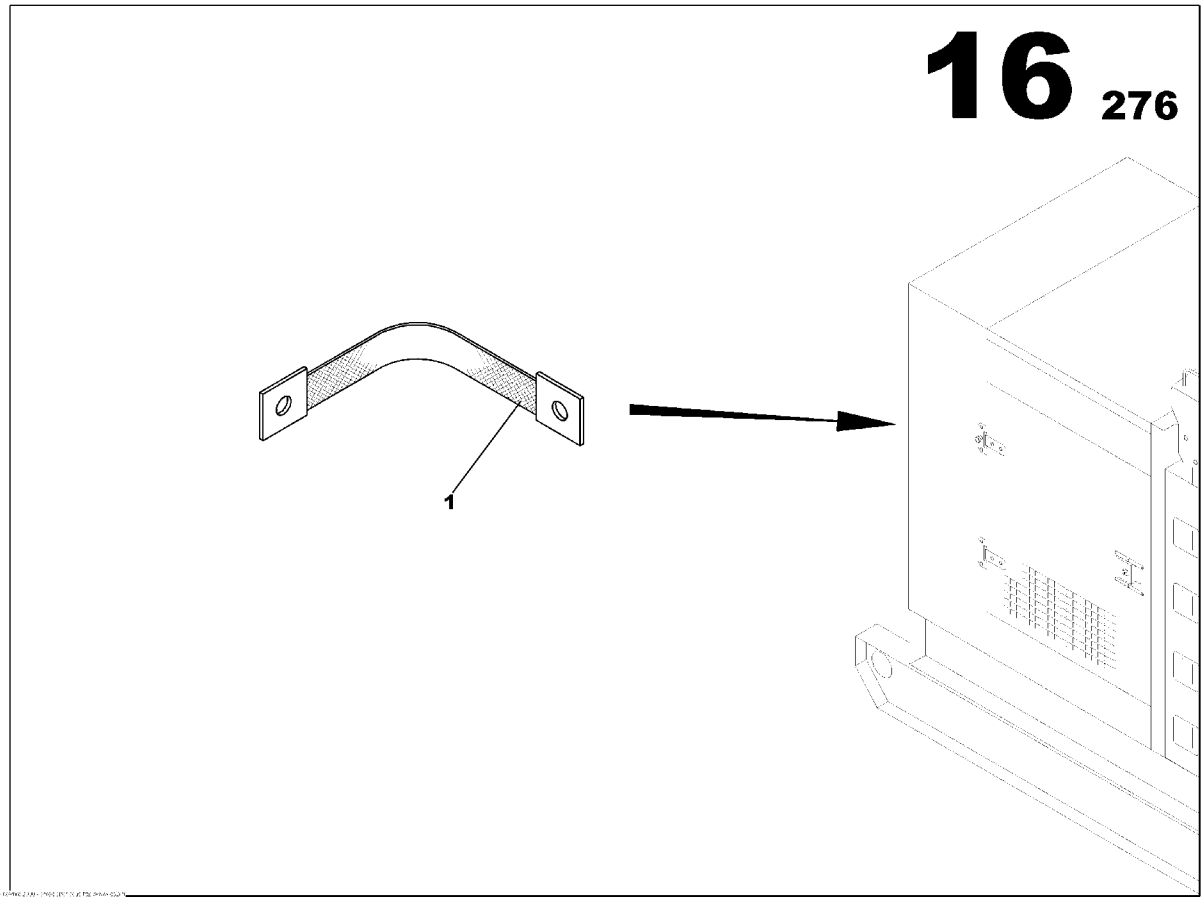

GROUND WIRES ASSEMBLY
85407922

Part numbers listed are only parts used in this model

Item	Part No.	Description	Qty	Un	From SN	To SN	Order PN	Page
1	85406460	GROUND WIRE 16mm2	4	UN			85406460	

CANOPY/FRAME M227 GASKET ASSEMBLY

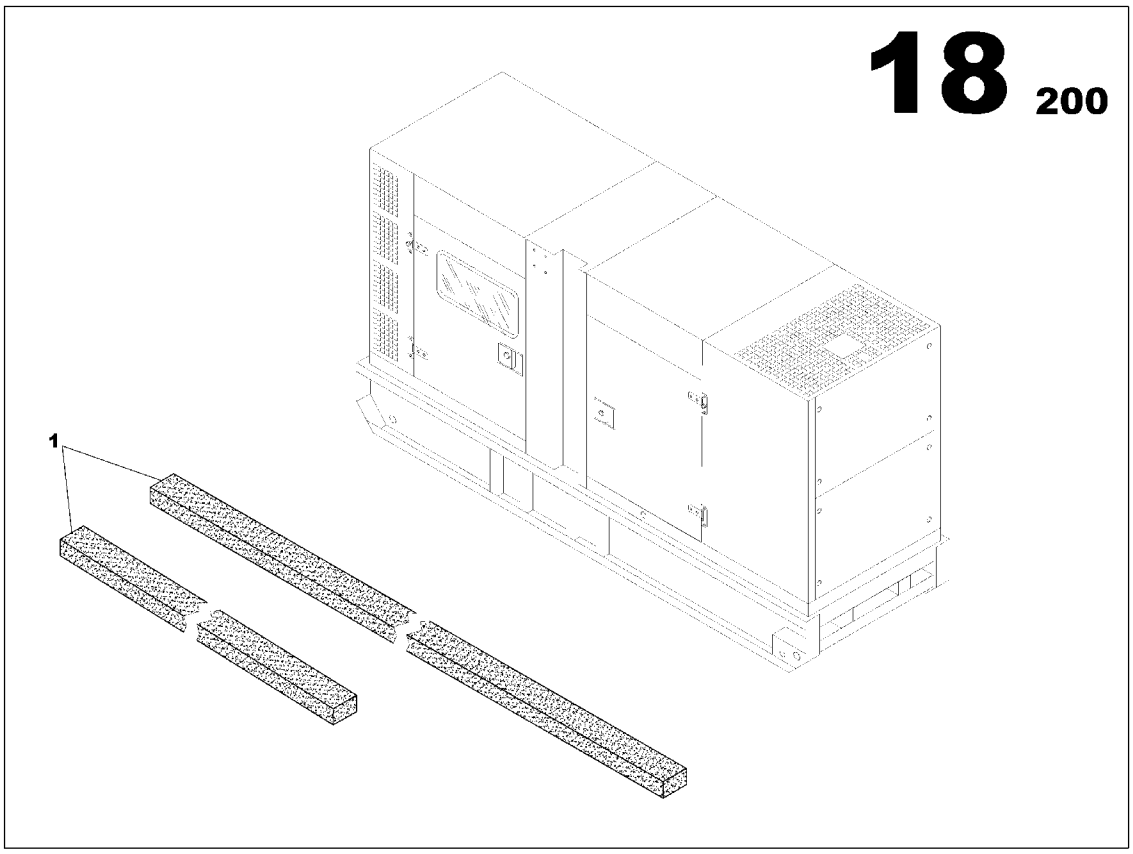

CANOPY/FRAME M227 GASKET ASSEMBLY
17140997

Part numbers listed are only parts used in this model

Item	Part No.	Description	Qty	Un	From SN	To SN	Order PN	Page
1	17133349	LINEAR SEAL	1.28	M			17133349	
1	17133349	LINEAR SEAL	2.9	M			17133349	

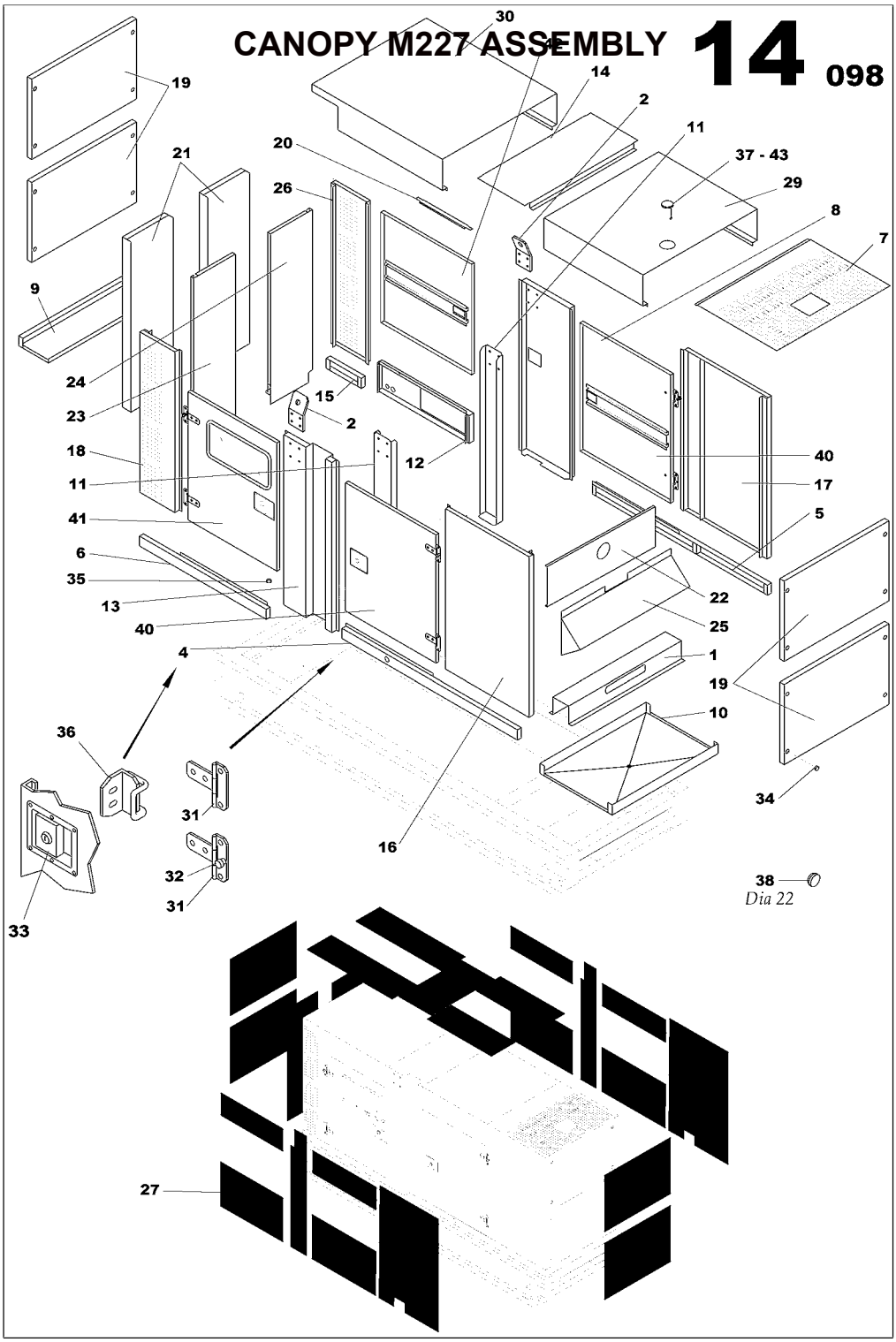
CANOPY M227 ASSEMBLY
14
098
30
14
2
11
37 - 43
29
8
7
19
21
20
26
9
24
23
18
11
41
6
35
13
40
4
36
33
31
32
31
16
15
2
12
40
17
5
22
25
1
19
10
34
38
Dia 22
27

CANOPY M227 ASSEMBLY
17138769

Part numbers listed are only parts used in this model

Item	Part No.	Description	Qty	Un	From SN	To SN	Order PN	Page
1	17138751	CANOPY M227 ASSEMBLY	1	UN			17138751	123

CANOPY M227 ASSEMBLY

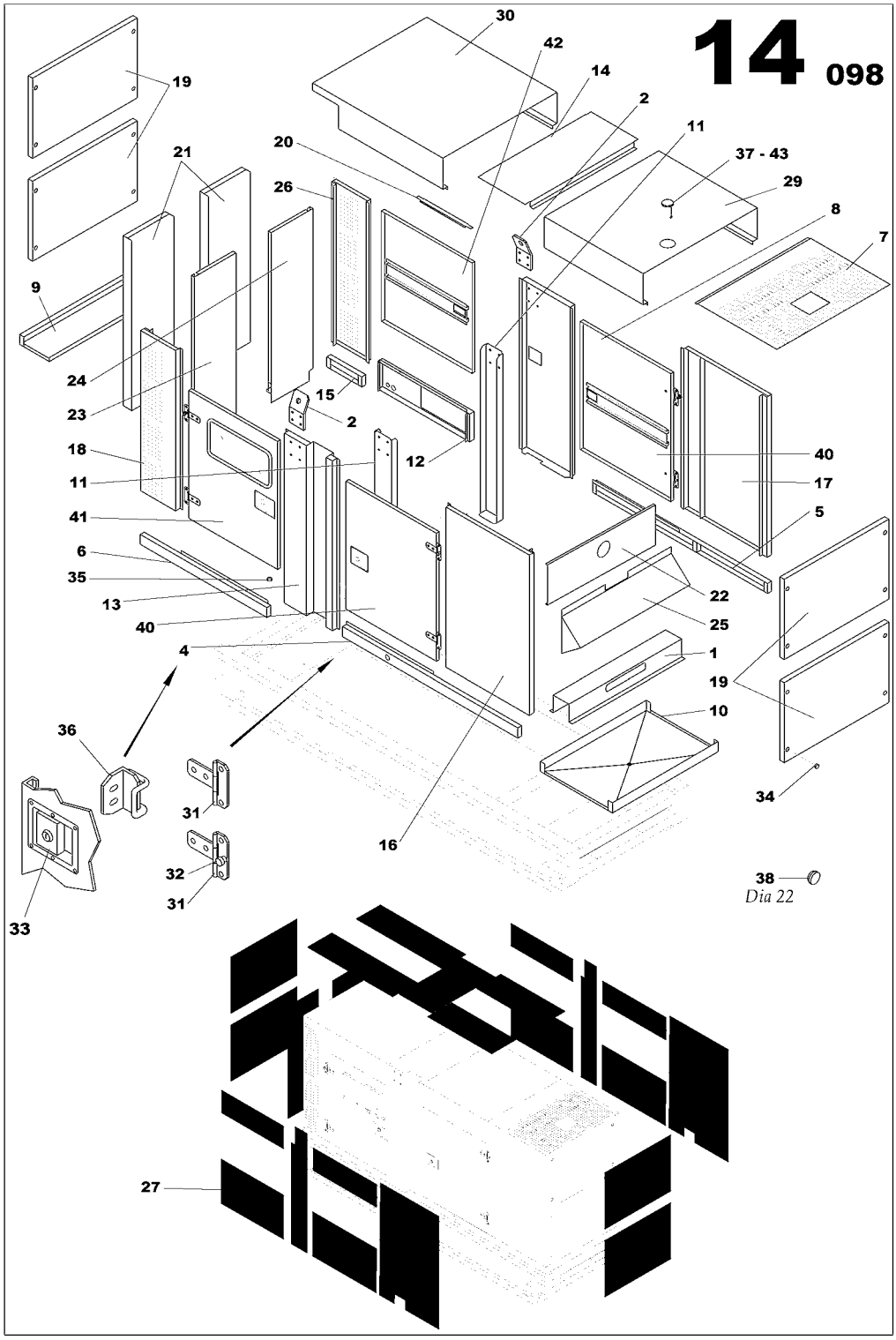

CANOPY M227 ASSEMBLY
17138751

Part numbers listed are only parts used in this model

Item	Part No.	Description	Qty	Un	From SN	To SN	Order PN	Page
1	85629848	40dB MUFFLER BRACKET M227	1	UN			85629848	
2	85497386	LIFTING BRACKET M424/425/426	2	UN			85497386	
4	17138462	BASEFRAME SIDE M227	1	UN			17138462	
5	17138470	BASEFRAME SIDE M227	1	UN			17138470	
6	17138488	BASEFRAME SIDE M227	1	UN			17138488	
7	17138496	AIR OUTLET LOUVER M227	1	UN			17138496	
8	17138504	SIDE SUPPORT ARCH RIGHT M227	1	UN			17138504	
9	17138512	REAR CLOSURE PANEL CANOPY M227	1	UN			17138512	
10	17138520	HOOD FRONT UNDERSHEETING M227	1	UN			17138520	
11	17138678	SUPPORT ARCH M227	2	UN			17138678	
12	17138702	BASEFRAME SIDE M227	1	UN			17138702	
13	17138710	SIDE SUPPORT ARCH LEFT M227	1	UN			17138710	
14	17138728	HOOD SUPPORT ARCH M227	1	UN			17138728	
15	17138801	BASEFRAME SIDE M227	1	UN			17138801	
16	17138918	RIGHT FRONT PLENUM PANEL M227	1	UN			17138918	
17	17138926	LEFT FORWARD PLENUM PANEL M227	1	UN			17138926	
18	17138934	RIGHT REAR PLENUM PANEL M227	1	UN			17138934	
19	17138942	M227 HEAD/REAR PANEL	4	UN			17138942	
20	17138959	CANOPY CENTRAL ARCH ISOLATION BRACKET M227	3	UN			17138959	
21	17139205	SOUND SHIELD M227	2	UN			17139205	
22	17139213	RADIATOR UPPER PANEL M227	1	UN			17139213	
23	17139221	AIR DEFLECTOR M227 REAR RIGHT	1	UN			17139221	
24	17139239	AIR DEFLECTOR M227 REAR LEFT	1	UN			17139239	
25	85630366	AIR DEFLECTOR M227 FRONT	1	UN			85630366	
26	17139304	LEFT REAR PLENUM PANEL M227	1	UN			17139304	
27	17139312	SOUNDPROOF PANELS BATCH M227	1	UN			17139312	
29	17139361	CANOPY FRONT TOP M227	1	UN			17139361	
30	17139379	CANOPY REAR TOP M227	1	UN			17139379	
31	85406155	DOOR HINGE	8	UN			85406155	
32	85406189	ANTI-VIBRATION MOUNT 140daN 15mm	4	UN			85406189	
33	85509305	CANOPY DOOR LOCK KEY LOCK *-Key: N° 455 supply without key*	4	UN			85509305	
34	85417186	PLUG D22.8	16	UN			85417186	
35	85406213	PLUG D6.9	6	UN			85406213	
36	85492460	STRIKER PLATE M400 CANOPY DOOR	4	UN			85492460	
37	85621142	FLAP D160	1	UN			85621142	
38	17139577	PLUG D22	1	UN			17139577	

CANOPY M227 ASSEMBLY

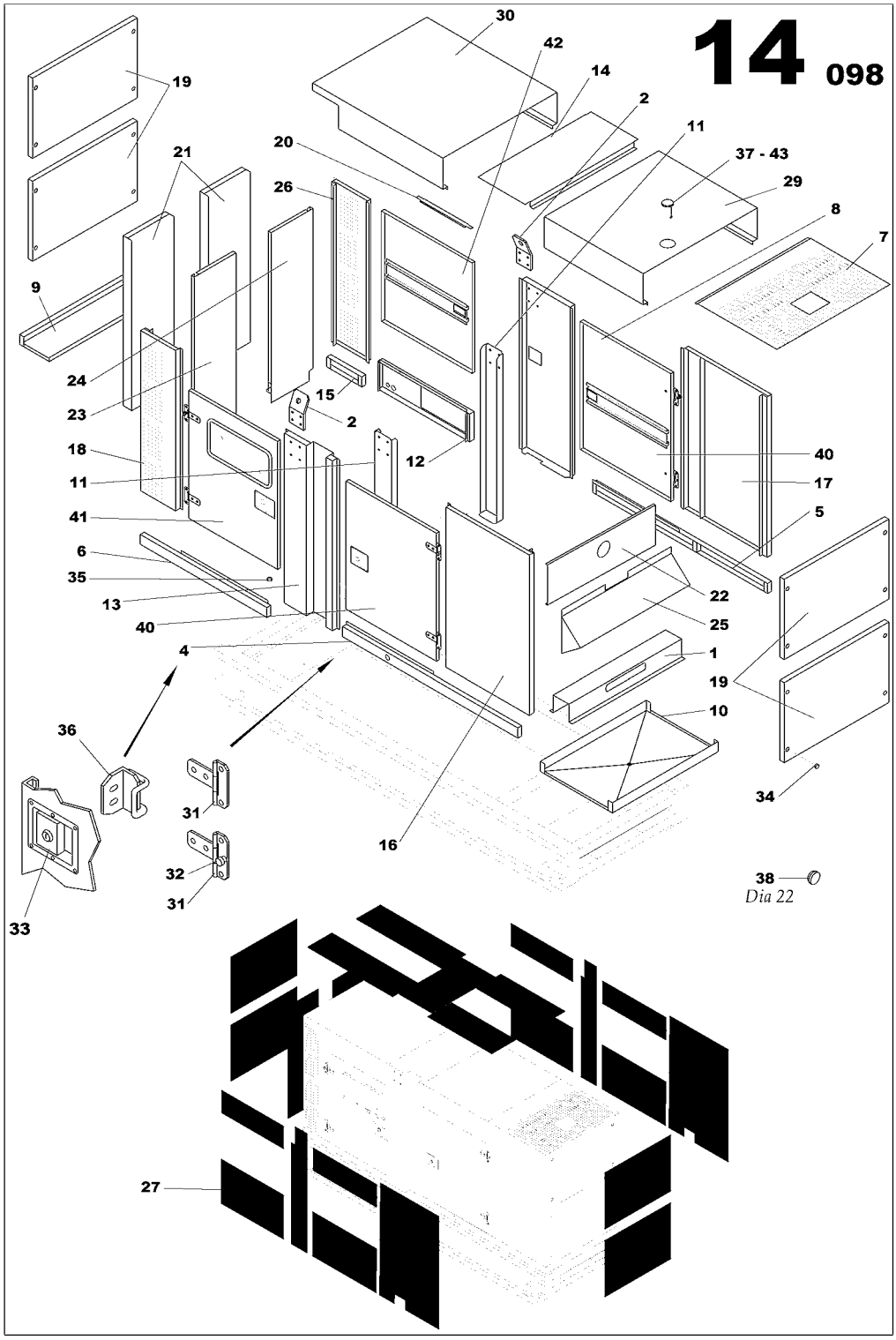

CANOPY M227 ASSEMBLY
17138751

Part numbers listed are only parts used in this model

Item	Part No.	Description	Qty	Un	From SN	To SN	Order PN	Page
40	17139601	CANOPY DOOR M227	2	UN			17139601	
41	17139619	CONTROL PANEL DOOR M227	1	UN			17139619	
42	17139643	CANOPY DOOR M227	1	UN			17139643	
43	85632016	CHAIN	1	UN			85632016	

CENTRAL LIFTING ARCH ASSEMBLY

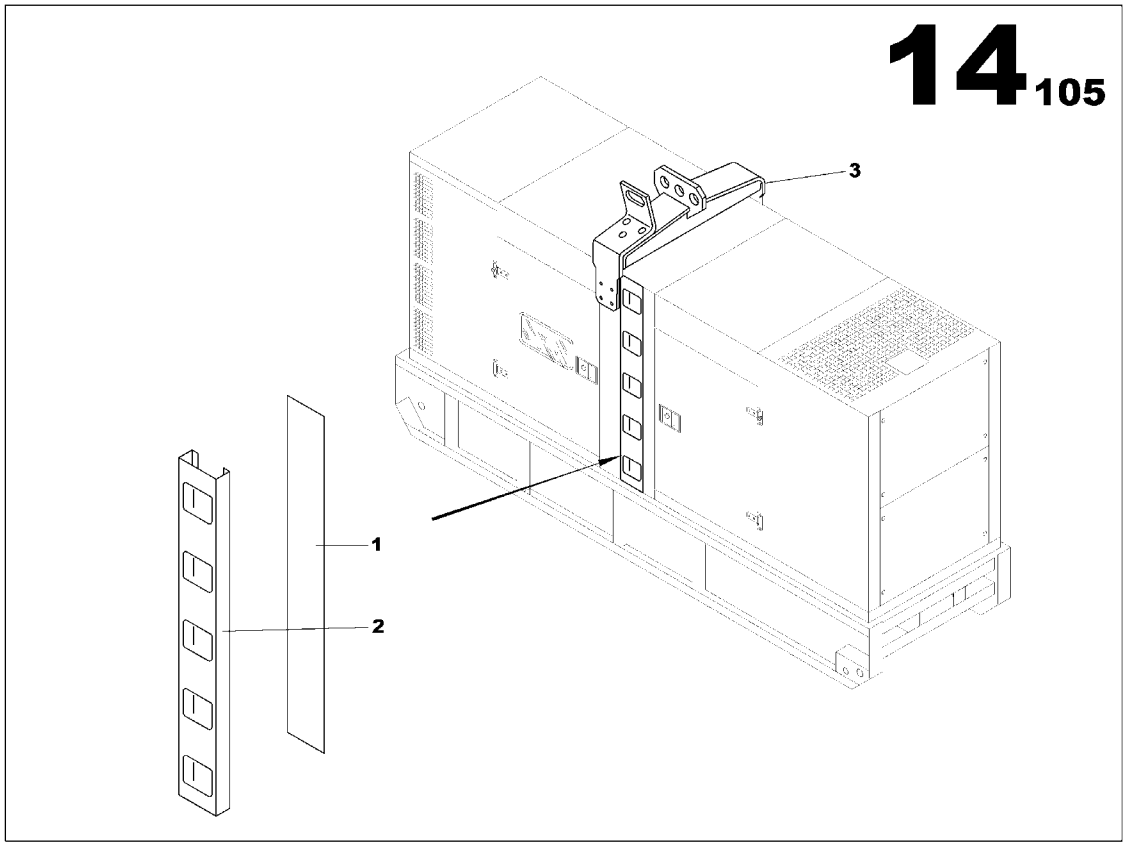

CENTRAL LIFTING ARCH ASSEMBLY
17139437

Part numbers listed are only parts used in this model

Item	Part No.	Description	Qty	Un	From SN	To SN	Order PN	Page
1	17138736	LADDER PROTECTION PANEL M227	1	UN			17138736	
2	17138744	LADDER M227	1	UN			17138744	
3	17139445	LIFTING FRAME ASSEMBLY	1	UN			17139445	129

LIFTING FRAME ASSEMBLY

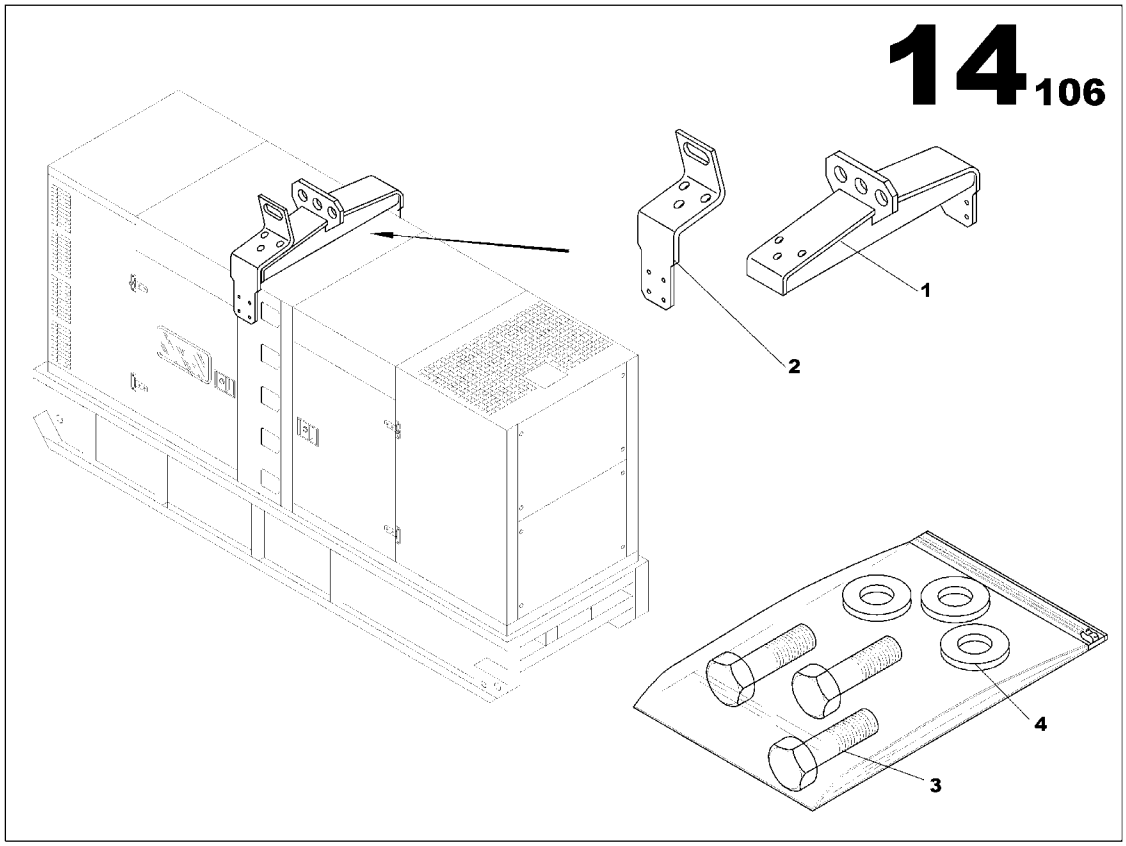

LIFTING FRAME ASSEMBLY
17139445

Part numbers listed are only parts used in this model

Item	Part No.	Description	Qty	Un	From SN	To SN	Order PN	Page
1	17139429	LIFTING FRAME 4500daN M227 CANOPY	1	UN			17139429	
2	17139452	LIFTING BRACKET M227	1	UN			17139452	
3	85632198	SCREW H M20x50	3	UN			85632198	
4	85632222	WASHER 20x40	3	UN			85632222	

EARTH ROD WITH CABLE CANOPY ASSEMBLY

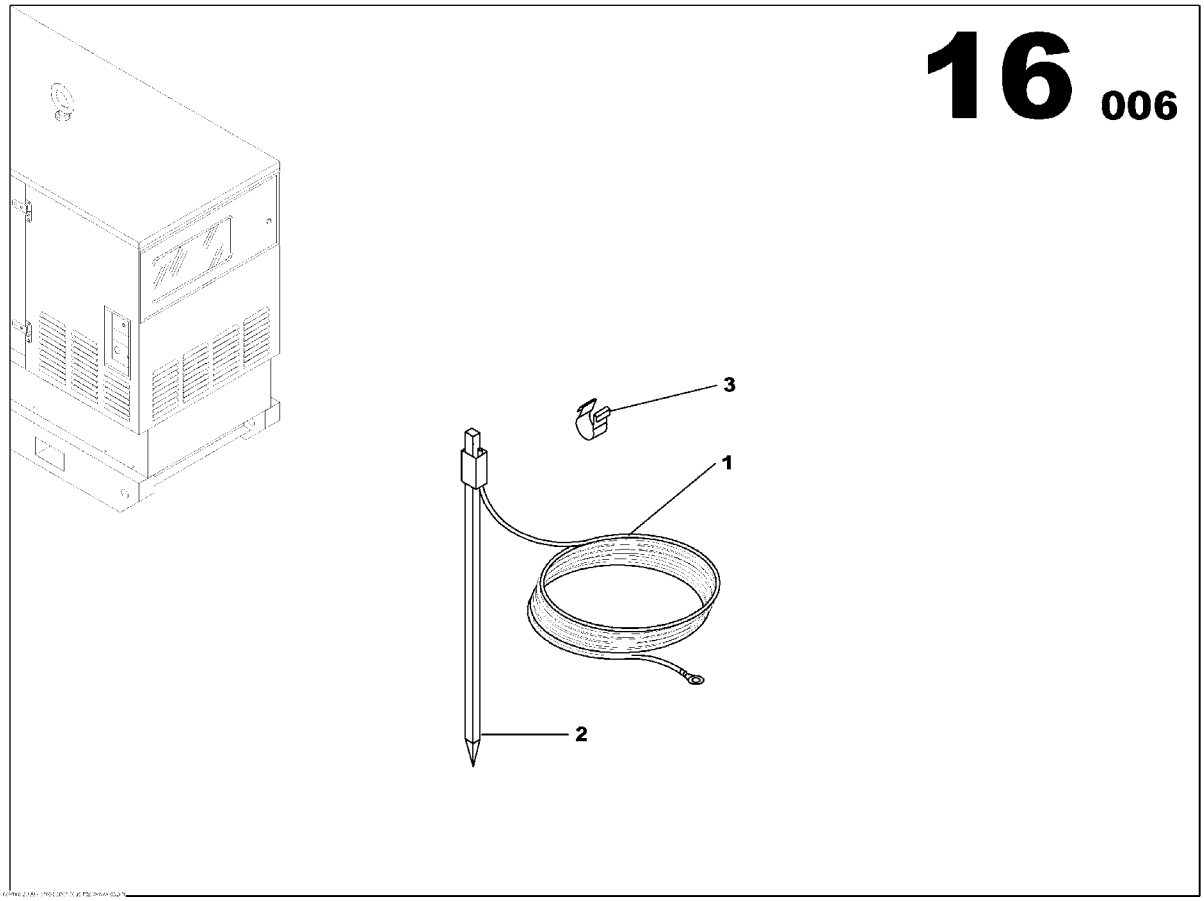

EARTH ROD WITH CABLE CANOPY ASSEMBLY
85407906

Part numbers listed are only parts used in this model

Item	Part No.	Description	Qty	Un	From SN	To SN	Order PN	Page
1	85408227	NEUTRAL/EARTH SYSTEM CABLE 25mm2 L10000 Gr/Ye	1	UN			85408227	
2	85408334	EARTH ROD L1000	1	UN			85408334	
3	85409191	CLIP-ON BRACKET	2	UN			85409191	

ELECTRICAL FUNCTION

Non illustré
Not illustrated

ELECTRICAL FUNCTION

Part numbers listed are only parts used in this model

Item	Part No.	Description	Qty	Un	From SN	To SN	Order PN	Page
1	17132424	PROTECTION PANEL OPTION	1	UN			17132424	135
2	17140195	AIPR ASSEMBLY	1	UN			17140195	137
3	85639599	DECALS TERMINAL BLOCK ASSEMBLY	1	UN			85639599	141
4		CONTROL PANEL FONCTION	1	UN				143
5		ELECTRIC SUPPLY FUNCTION	1	UN				179

PROTECTION PANEL OPTION

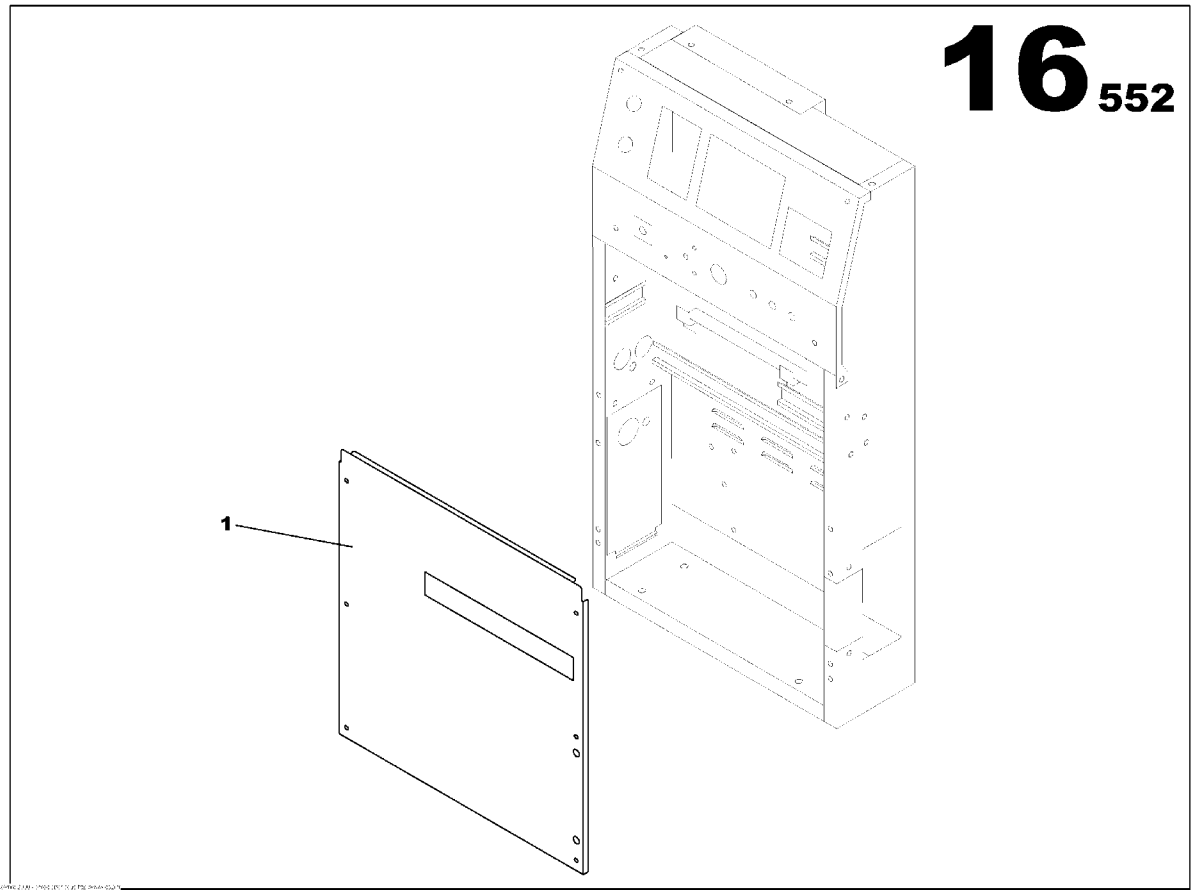

PROTECTION PANEL OPTION
17132424

Part numbers listed are only parts used in this model

Item	Part No.	Description	Qty	Un	From SN	To SN	Order PN	Page
1	17132200	S4500 CLOSURE PANEL	1	UN			17132200	

AIPR ASSEMBLY

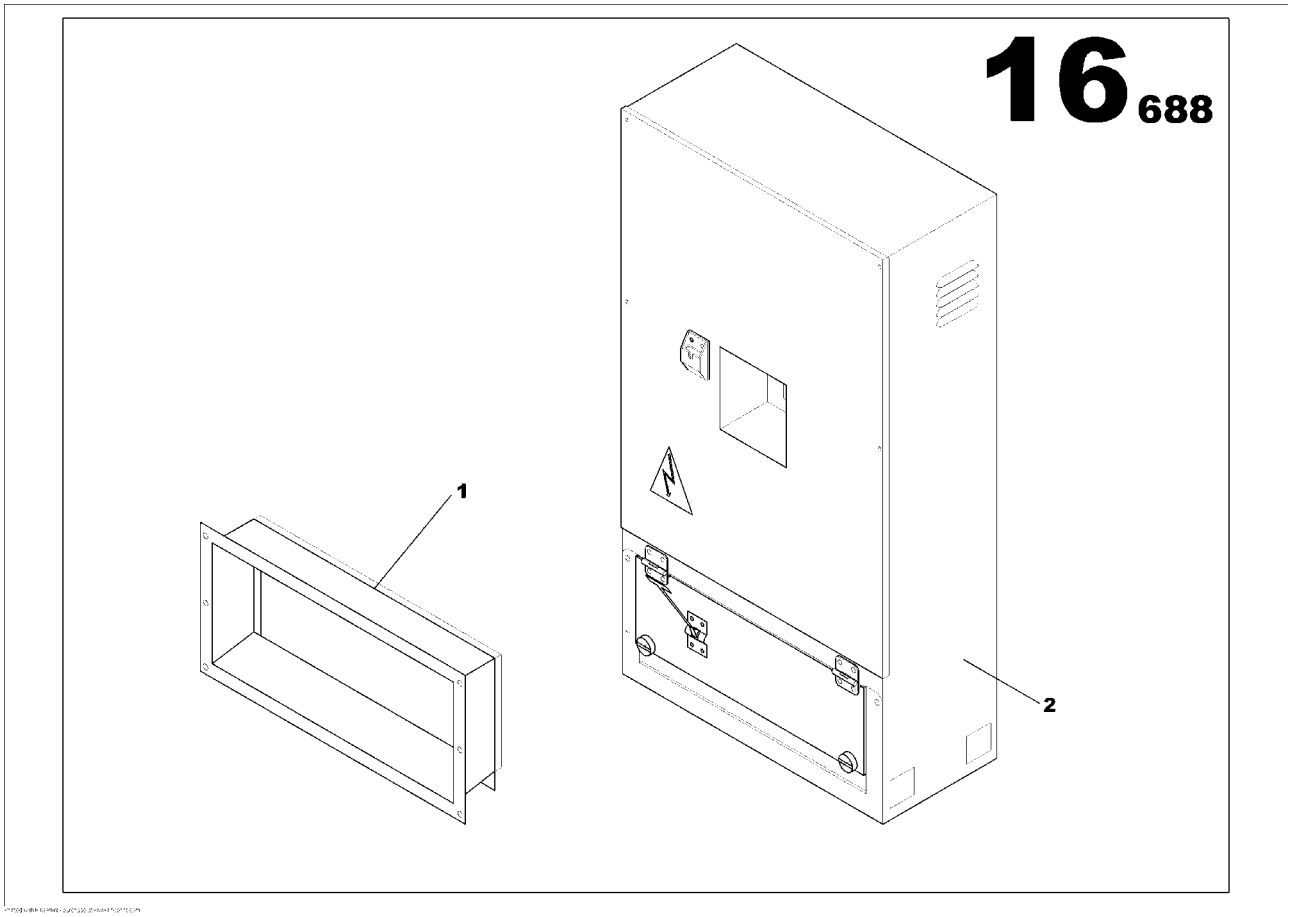

AIPR ASSEMBLY
17140195

Part numbers listed are only parts used in this model

Item	Part No.	Description	Qty	Un	From SN	To SN	Order PN	Page
1	17138850	AIPR ACCES PANEL	1	UN			17138850	
2	17140187	AIPR ASSEMBLY	1	UN			17140187	139

AIPR ASSEMBLY

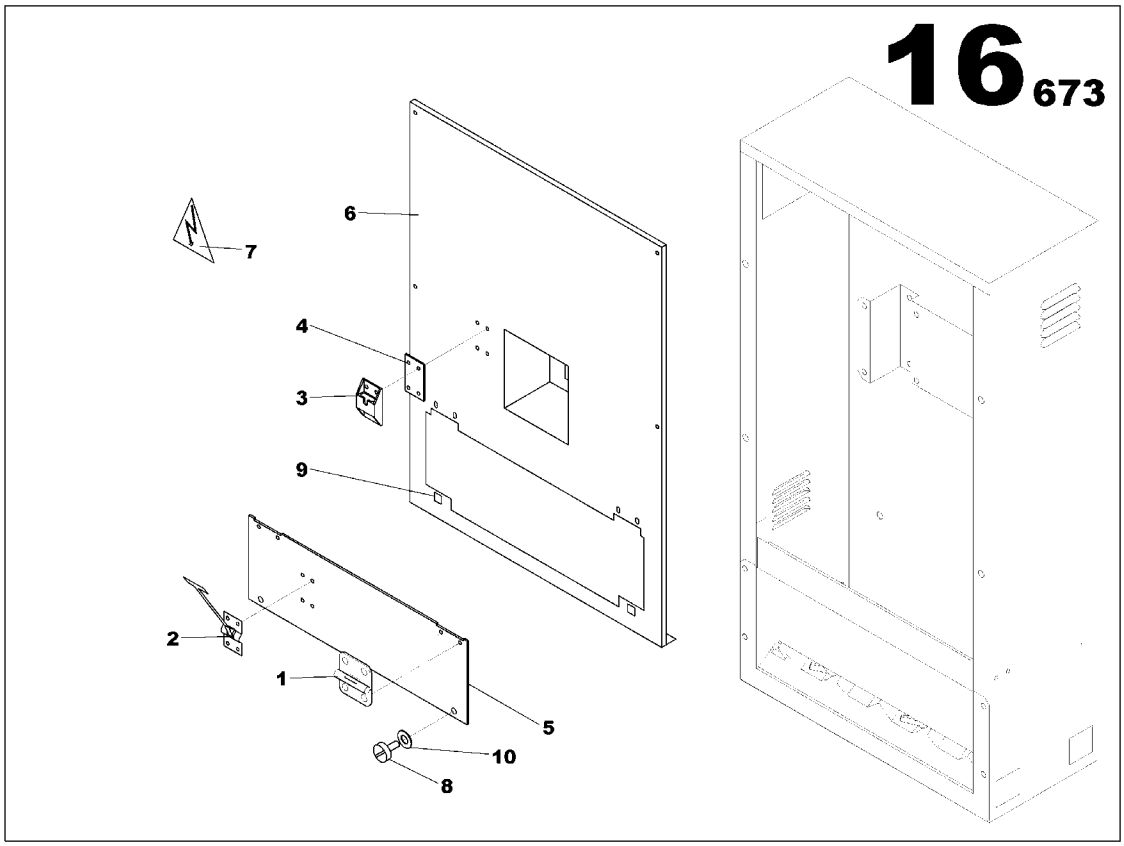

AIPR ASSEMBLY
17140187

Part numbers listed are only parts used in this model

Item	Part No.	Description	Qty	Un	From SN	To SN	Order PN	Page
1	85406130	DOOR HINGE	2	UN			85406130	
2	17139544	INOXIDABLE HOOK 90mm	1	UN			17139544	
3	17139551	DOOR STOP	1	UN			17139551	
4	17139569	BASE PLATE PAD FOR PLATE	1	UN			17139569	
5	17139981	DOOR PLEXI AIPR	1	UN			17139981	
6	17140179	AIPR PANEL	1	UN			17140179	
7	85409175	STICKER ELECTRIC DANGER SYMBOL	1	UN			85409175	
8	85409225	1/4 TURN SCREW D9 *-Order 31801021601NE*	2	UN			85409225	
9	85409233	CAPTIVE NUT FOR 1/4 TURN BOLT *-Order 31801021601NE*	2	UN			85409233	
10	85409241	WASHER FOR 1/4 TURN FASTENER *-Order 31801021601NE*	2	UN			85409241	

DECALS TERMINAL BLOCK ASSEMBLY

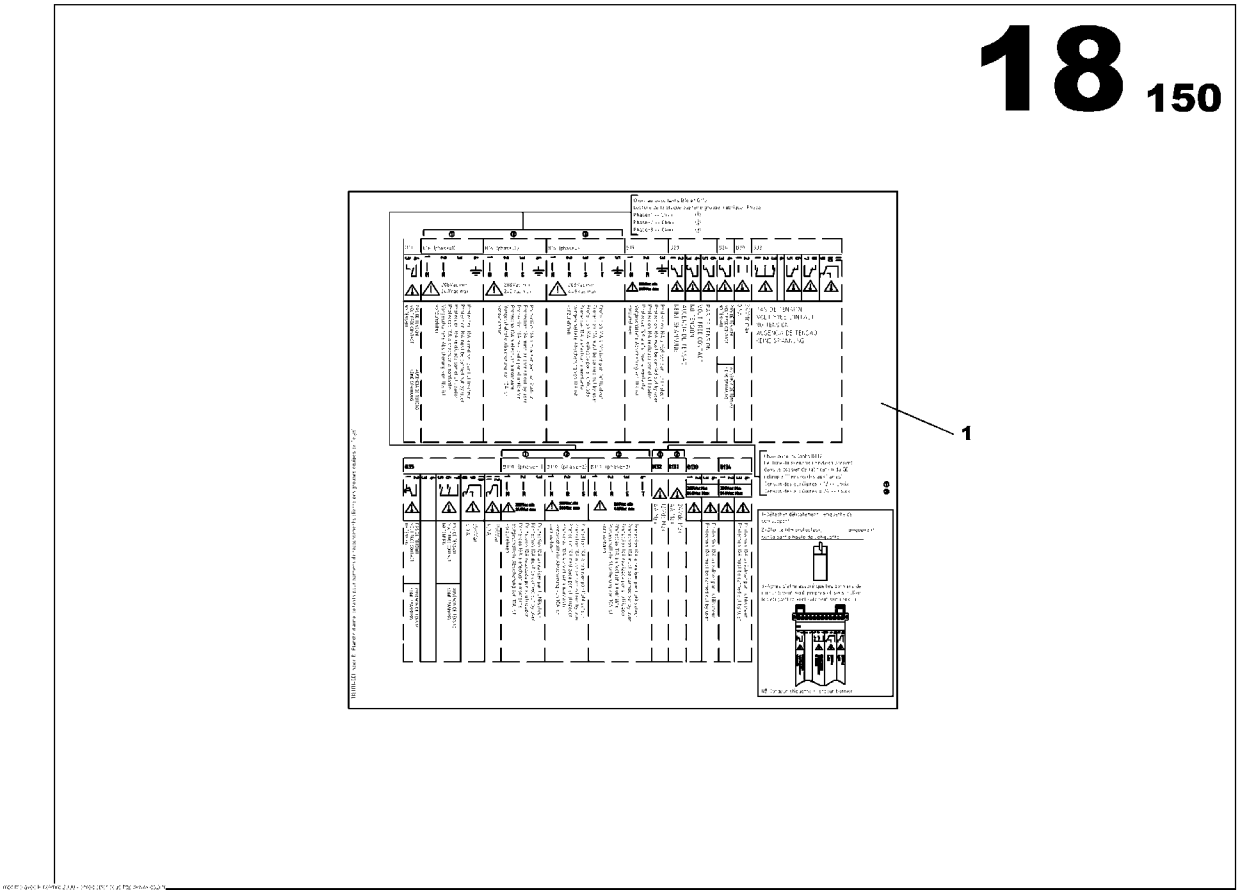

DECALS TERMINAL BLOCK ASSEMBLY
85639599

Part numbers listed are only parts used in this model

Item	Part No.	Description	Qty	Un	From SN	To SN	Order PN	Page
1	85639573	STICKER TERMINAL BLOCK	1	UN	03012825		85639573	

CONTROL PANEL FUNCTION

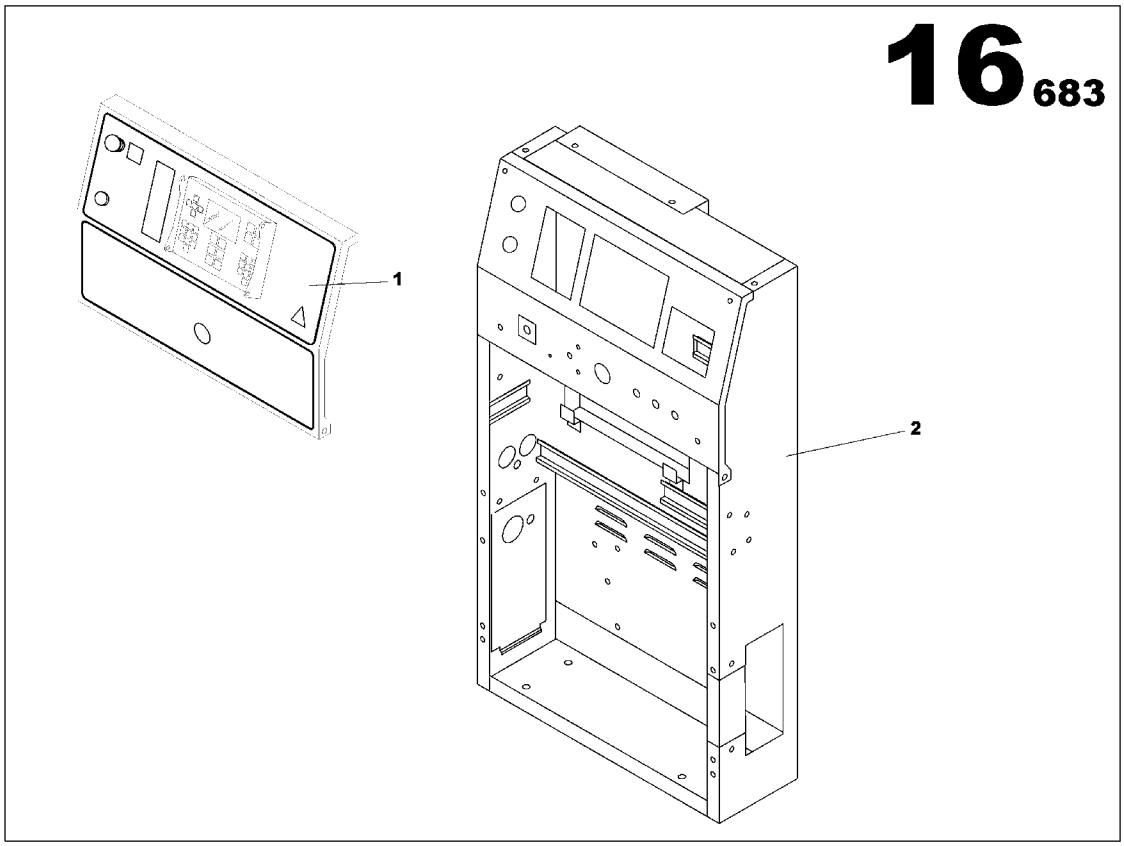

CONTROL PANEL FUNCTION

Part numbers listed are only parts used in this model

Item	Part No.	Description	Qty	Un	From SN	To SN	Order PN	Page
1	85411569	INTELLISYS OPTION CB CARD	1	UN			85411569	145
2	17133166	SPEED POTENTIOMETER OPTION	1	UN			17133166	151
3	17133174	ELECTRIC PACK OPTION	1	UN			17133174	153
4	17140740	EARTH LEAKAGE OPTION	1	UN			17140740	
5	17140757	INTELLISYS OPTION LOW FUEL LEVEL	1	UN			17140757	
6	17140781	S4500 DASHBOARD OPTION	1	UN			17140781	157
7		WIRING LOOM FUNCTION	1	UN				173

INTELLISYS OPTION CB CARD

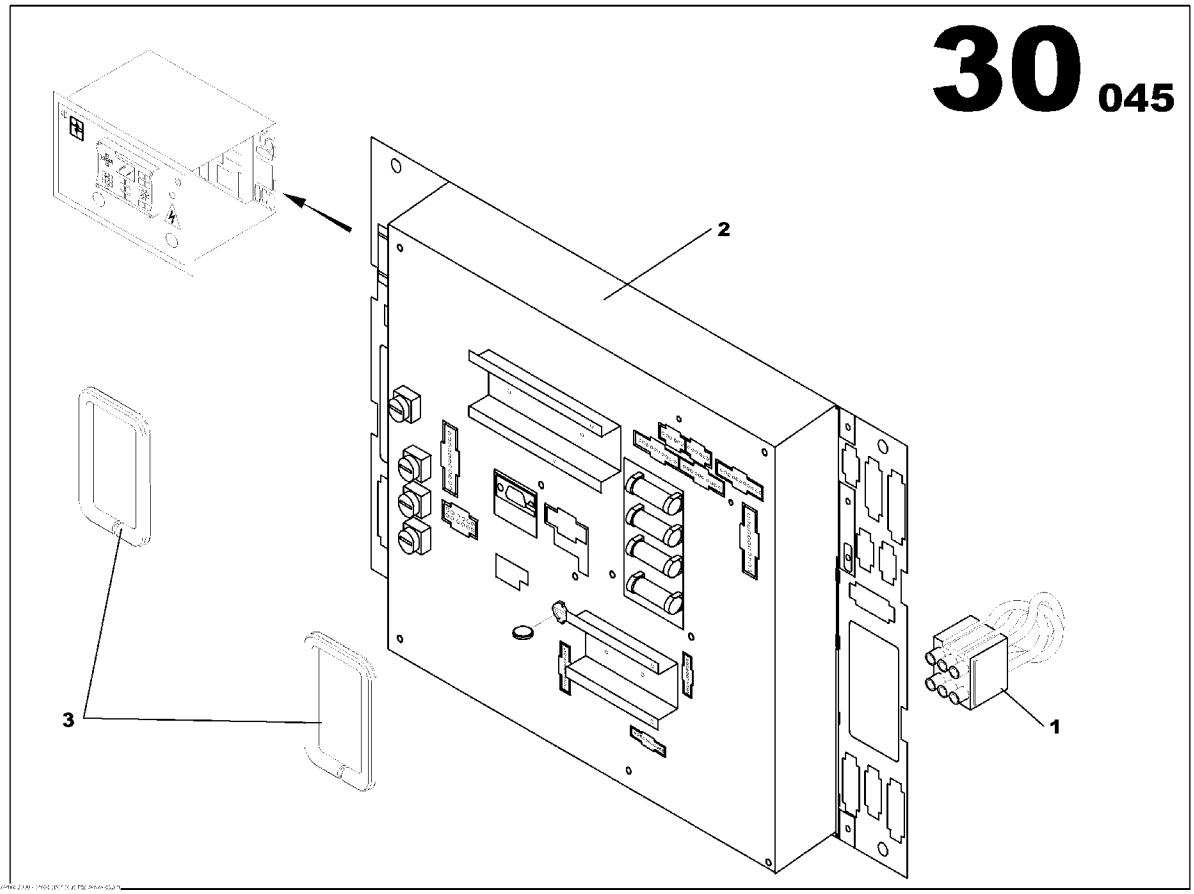

INTELLISYS OPTION CB CARD
85411569

Part numbers listed are only parts used in this model

Item	Part No.	Description	Qty	Un	From SN	To SN	Order PN	Page
1	85504033	WIRING LOOM C35S	1	UN			85504033	
2	85627198	INTELLISYS CARD CB12 *-1,06F*	1	UN	02010540	04000933	85636991	147
2	85636991	INTELLISYS CARD CB12 *-1.10G*	1	UN	04000934		85636991	149
3	85630515	LINEAR SEAL	0.2	ML			85630515	

INTELLISYS CARD CB12

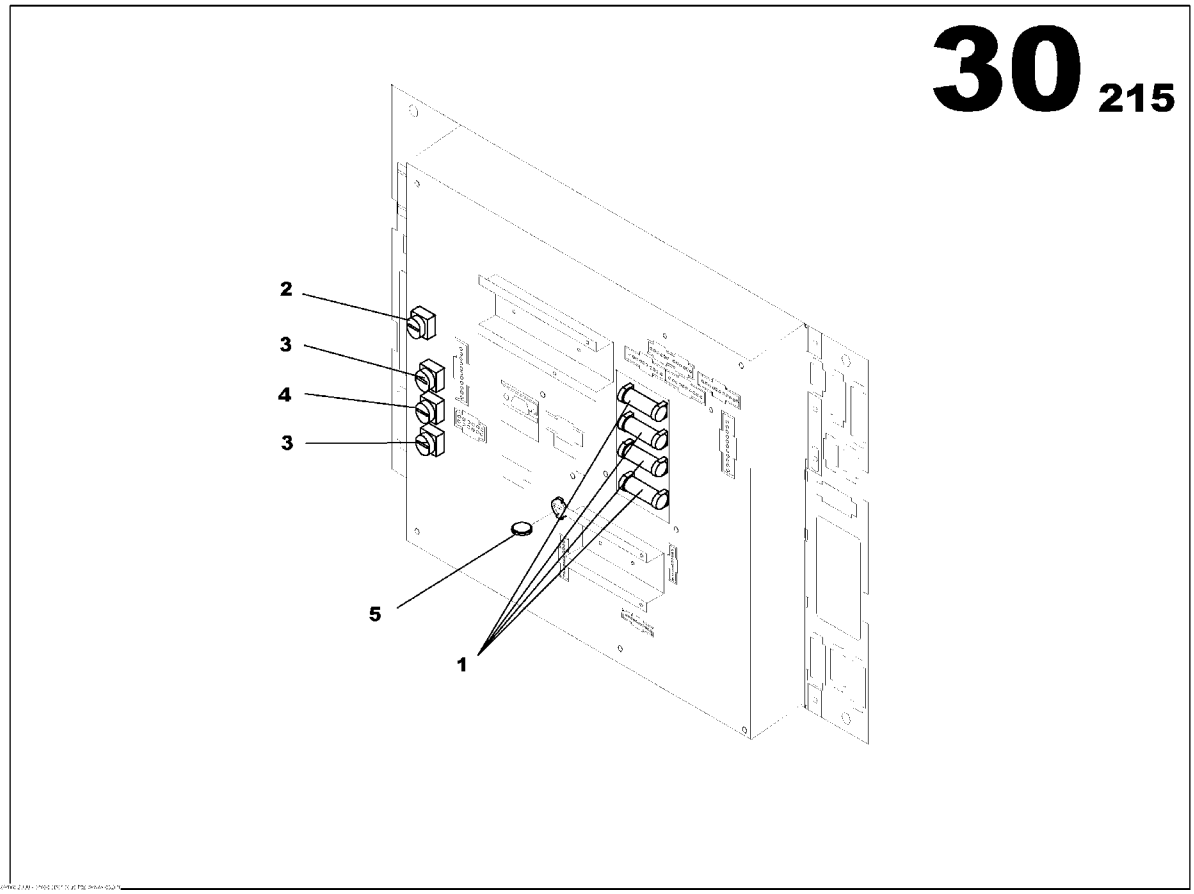

INTELLISYS CARD CB12

85627198

Part numbers listed are only parts used in this model

Item	Part No.	Description	Qty	Un	From SN	To SN	Order PN	Page
1	85426112	FUSE CYLINDRICAL 12.5A	4	UN			85426112	
2	85426120	FUSE CYLINDRICAL 10A	1	UN			85426120	
3	85426138	FUSE CYLINDRICAL 1A	2	UN			85426138	
4	85426146	FUSE CYLINDRICAL 2,5A	1	UN			85426146	
5	85505154	CR2032 CELL	1	UN			85505154	

INTELLISYS CARD CB12

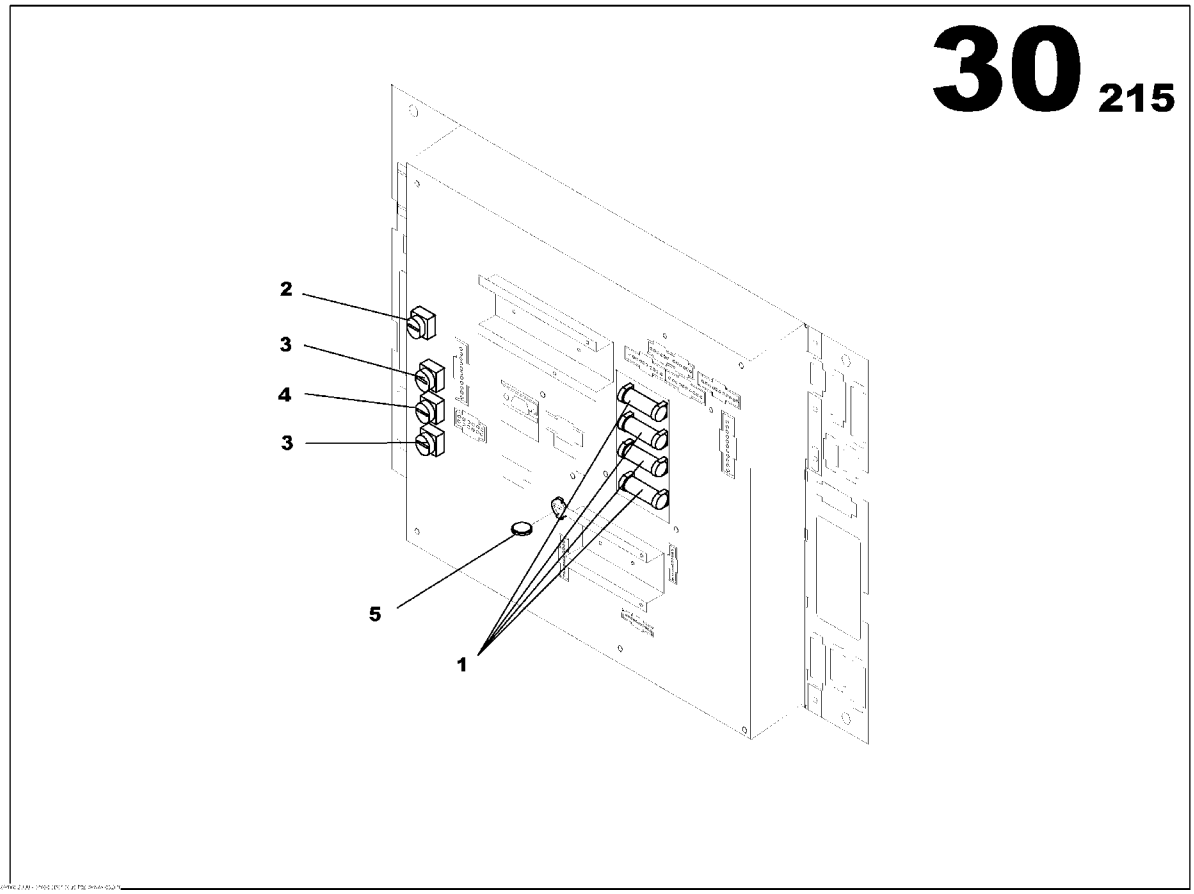

INTELLISYS CARD CB12

85636991

Part numbers listed are only parts used in this model

Item	Part No.	Description	Qty	Un	From SN	To SN	Order PN	Page
1	85426112	FUSE CYLINDRICAL 12.5A	4	UN			85426112	
2	85426120	FUSE CYLINDRICAL 10A	1	UN			85426120	
3	85426138	FUSE CYLINDRICAL 1A	2	UN			85426138	
4	85426146	FUSE CYLINDRICAL 2,5A	1	UN			85426146	
5	85505154	CR2032 CELL	1	UN			85505154	

SPEED POTENTIOMETER OPTION

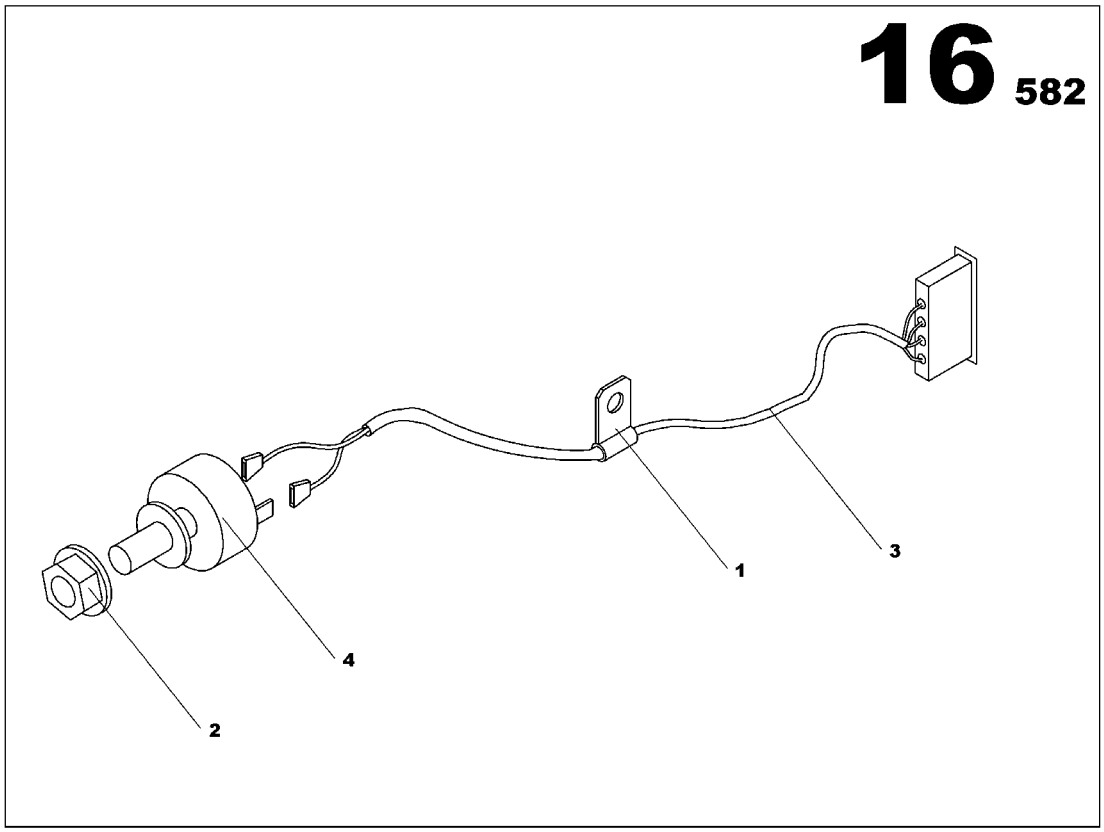

SPEED POTENTIOMETER OPTION
17133166

Part numbers listed are only parts used in this model

Item	Part No.	Description	Qty	Un	From SN	To SN	Order PN	Page
1	85504207	CLAMP D4.7	1	UN			85504207	
2	85504215	LOCK AXE SYSTEM	1	UN			85504215	
3	85503993	WIRING LOOM C105 L540	1	UN			85503993	
4	85504223	POTENTIOMETER 4.7kOHMS	1	UN			85504223	

ELECTRIC PACK OPTION

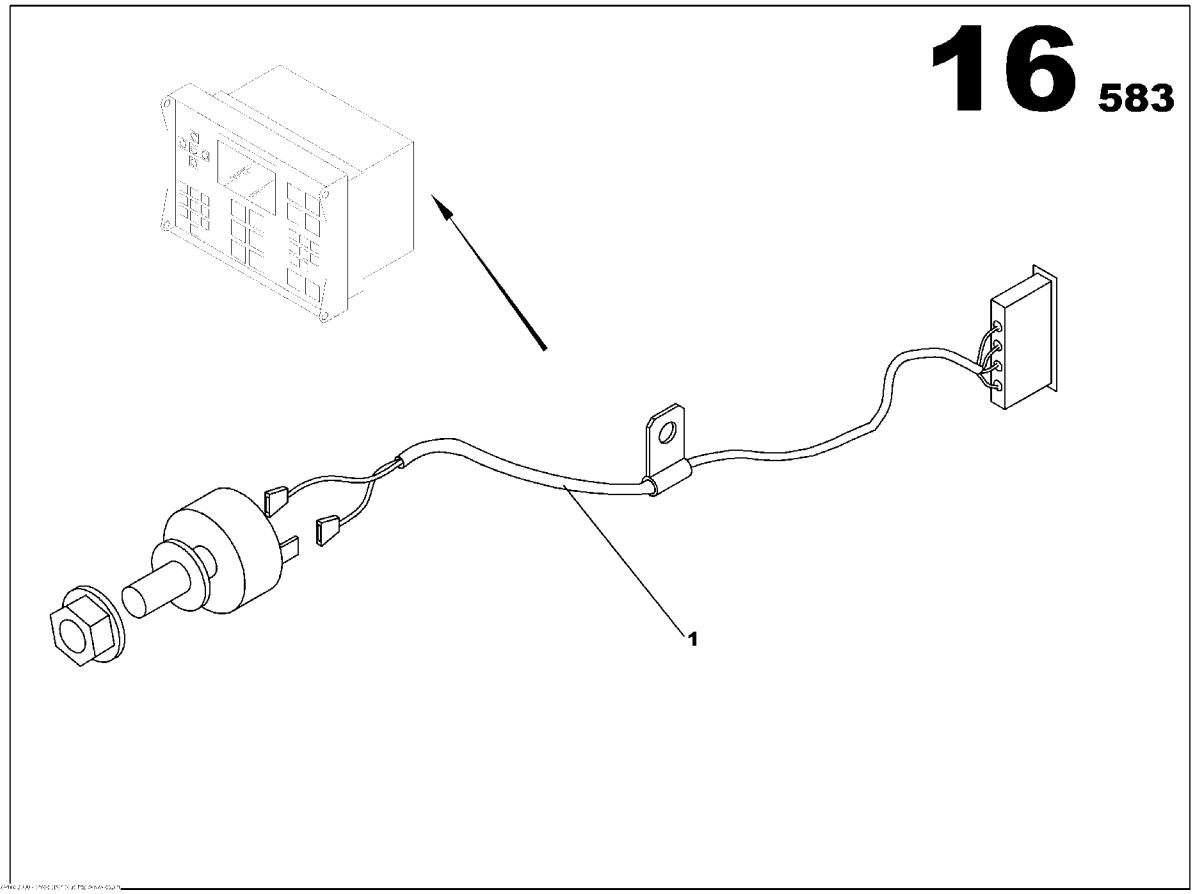

ELECTRIC PACK OPTION
17133174

Part numbers listed are only parts used in this model

Item	Part No.	Description	Qty	Un	From SN	To SN	Order PN	Page
1	85636140	VOLTAGE POTENTIOMETER OPTION	1	UN			85636140	155

VOLTAGE POTENTIOMETER OPTION

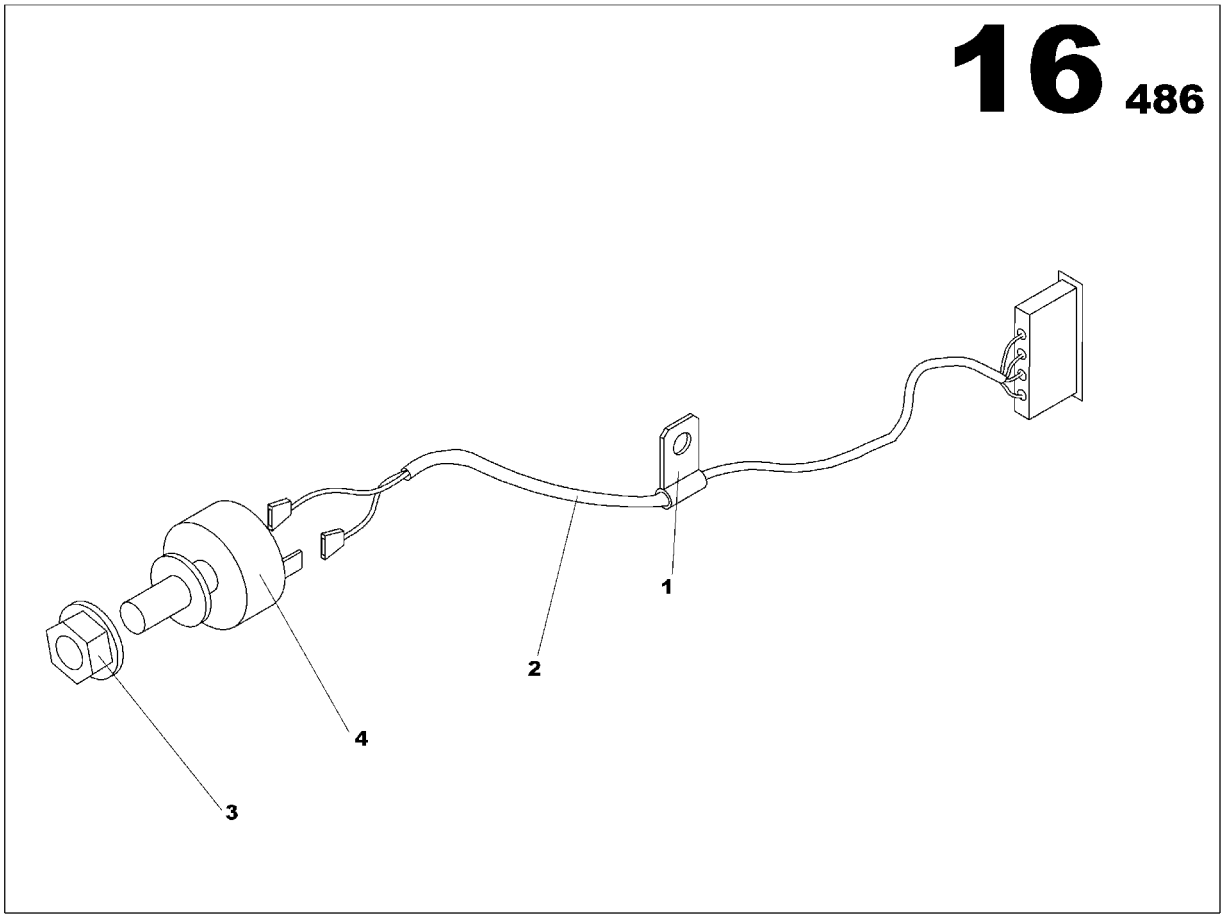

VOLTAGE POTENTIOMETER OPTION
85636140

Part numbers listed are only parts used in this model

Item	Part No.	Description	Qty	Un	From SN	To SN	Order PN	Page
1	85504207	CLAMP D4.7	1	UN			85504207	
2	85636959	INTELLISYS WIRING LOOM 031	1	UN			85636959	
3	85504215	LOCK AXE SYSTEM	1	UN			85504215	
4	85504264	POTENTIOMETER 1kOHMS	1	UN			85504264	

S4500 DASHBOARD OPTION

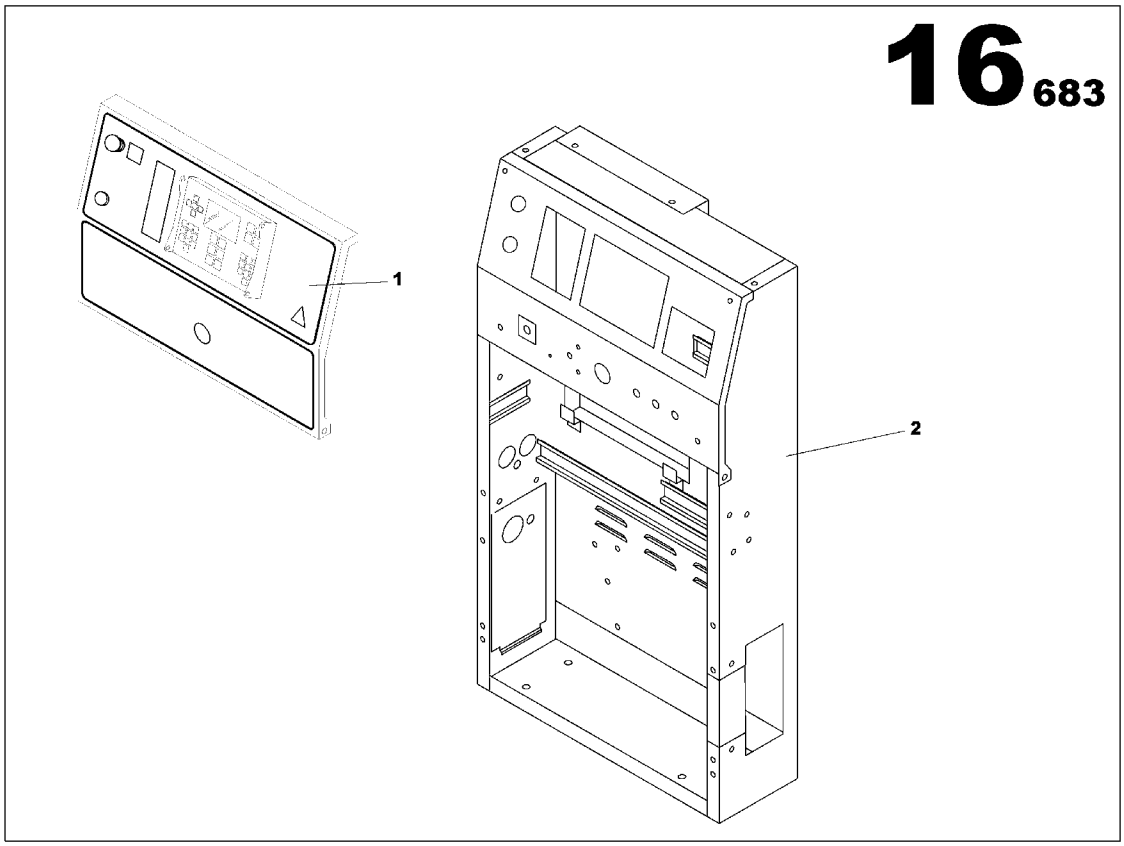

S4500 DASHBOARD OPTION
17140781

Part numbers listed are only parts used in this model

Item	Part No.	Description	Qty	Un	From SN	To SN	Order PN	Page
1	85639565	PLASTIQUE PLATE L548xh310	1	UN			85639565	
2	85638336	CONTROL PANEL SHEET METAL ASSEMBLY	1	UN			85638336	159
3	17140765	CONTROL PANEL ASSEMBLY	1	UN			17140765	161

CONTROL PANEL SHEET METAL ASSEMBLY

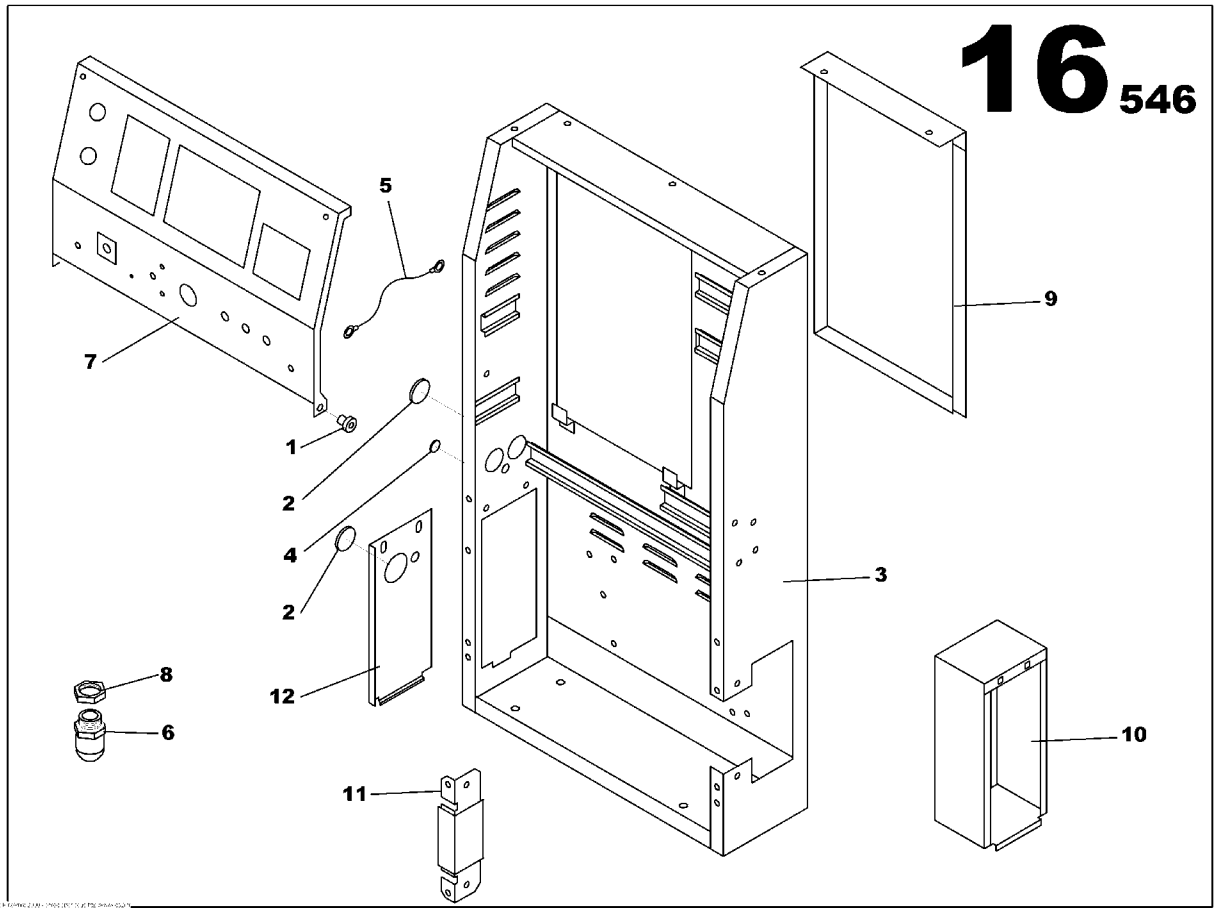

CONTROL PANEL SHEET METAL ASSEMBLY
85638336

Part numbers listed are only parts used in this model

Item	Part No.	Description	Qty	Un	From SN	To SN	Order PN	Page
1	85636660	SLEAVE BEARING	2	UN			85636660	
2	85408391	RUBBER GROMMET D47	3	UN			85408391	
3	85638294	CONTROL PANEL S4500 HOUSING	1	UN			85638294	
4	85636694	RUBBER GROMMET D15	1	UN			85636694	
5	85634582	COVER STOP CONTROL PANEL S3500	2	UN			85634582	
6	85635894	GLAND NUT PG13	1	UN			85635894	
7	85638310	CONTROL PANEL BRACKET	1	UN			85638310	
8	85635902	PG13 NUT	1	UN			85635902	
9	85634517	REAR CLOSURE PANEL S3500 CONTROL PANEL	1	UN			85634517	
10	85638492	SPACER	1	UN			85638492	
11	85638328	SUPPORT PANEL S4500 CONTROL PANEL	1	UN			85638328	
12	85638476	CABLE OUTLET PLATE	1	UN			85638476	

CONTROL PANEL ASSEMBLY

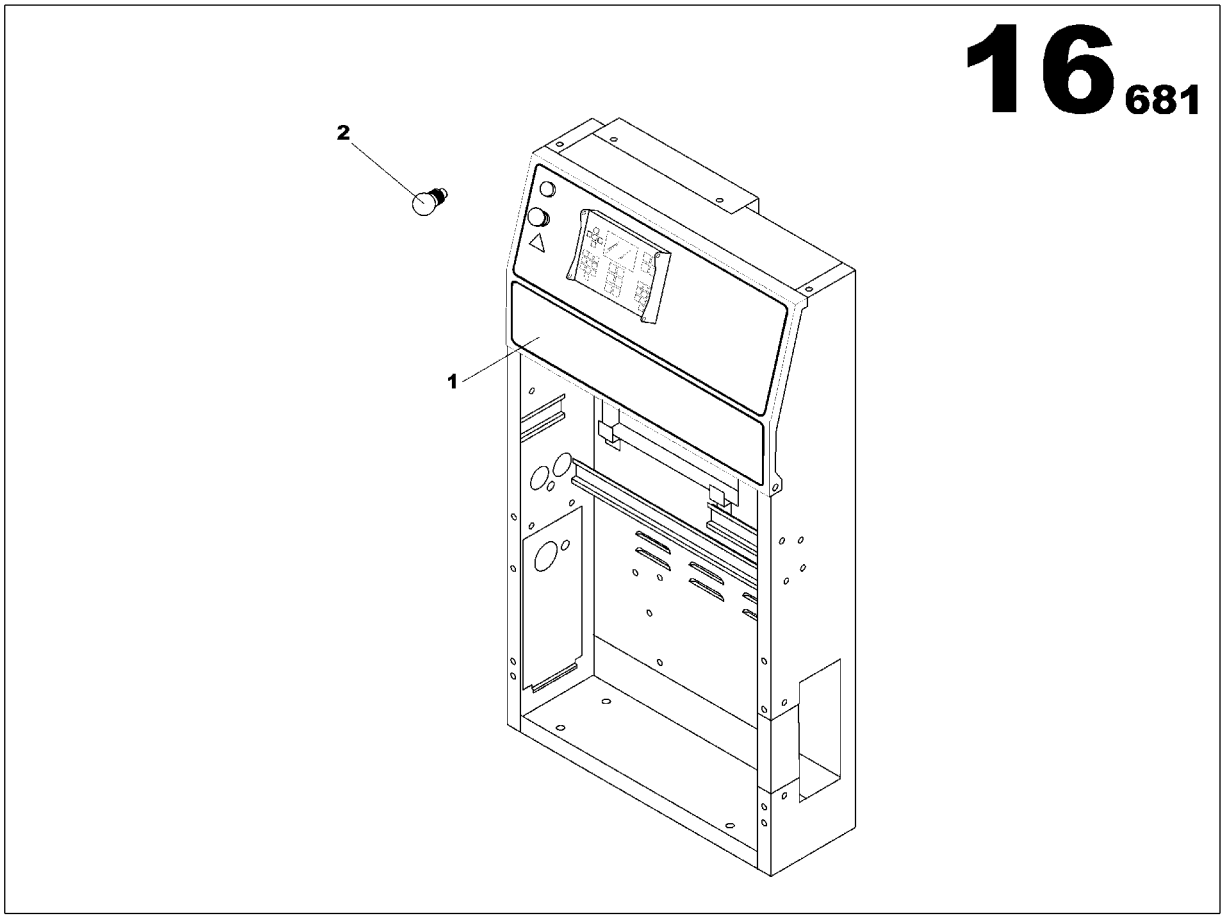

CONTROL PANEL ASSEMBLY
17140765

Part numbers listed are only parts used in this model

Item	Part No.	Description	Qty	Un	From SN	To SN	Order PN	Page
1	85639292	CONTROL PANEL ASSEMBLY	1	UN			85639292	163
2	85504090	LAMP 30V BA9S TYPE	1	UN			85504090	

CONTROL PANEL ASSEMBLY

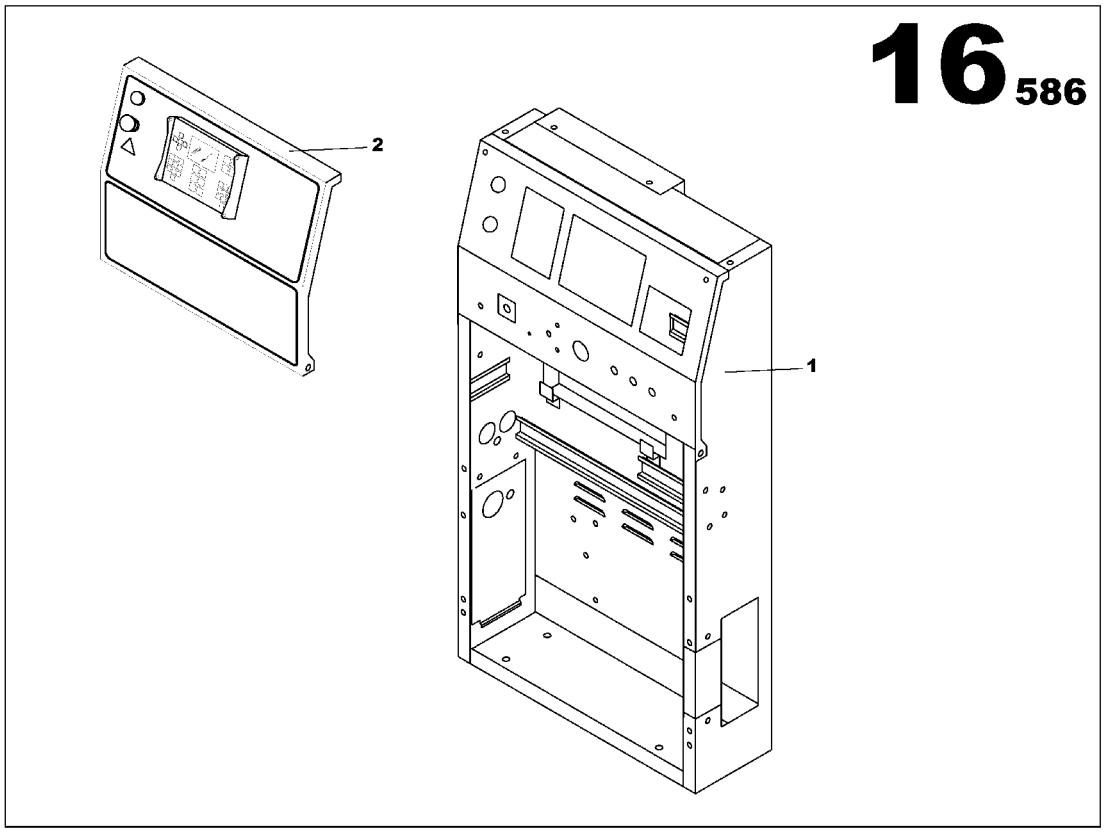

CONTROL PANEL ASSEMBLY
85639292

Part numbers listed are only parts used in this model

Item	Part No.	Description	Qty	Un	From SN	To SN	Order PN	Page
1	17135724	S4500 DASHBOARD OPTION	1	UN			17135724	165
2	85639839	BASIC S4500 FRONT FACE	1	UN			85639839	169

S4500 DASHBOARD OPTION

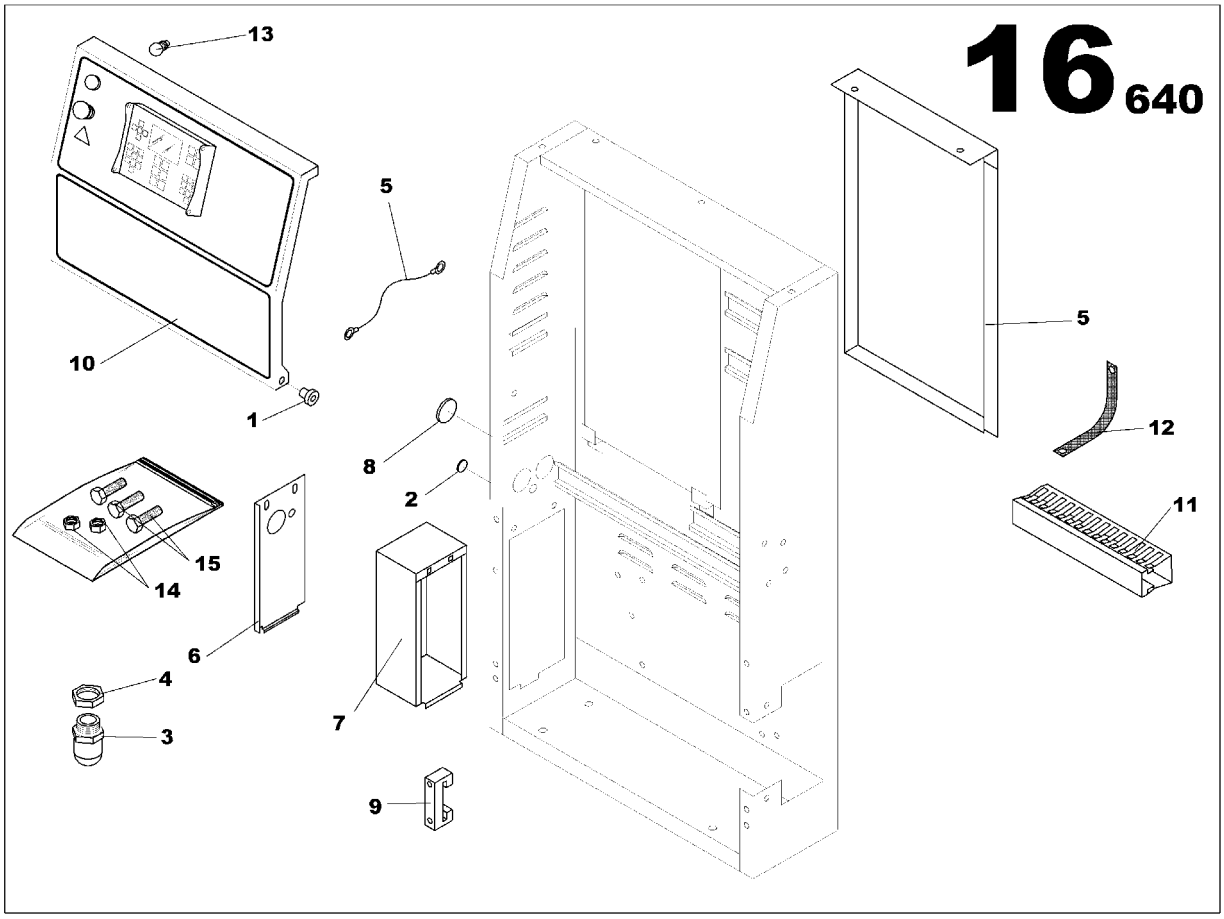

S4500 DASHBOARD OPTION
17135724

Part numbers listed are only parts used in this model

Item	Part No.	Description	Qty	Un	From SN	To SN	Order PN	Page
1	85636660	SLEAVE BEARING	2	UN			85636660	
2	17135476	PLUG	1	UN			17135476	
3	85408615	GLAND NUT PG13	1	UN			85408615	
4	85635902	PG13 NUT	1	UN			85635902	
5	85634517	REAR CLOSURE PANEL S3500 CONTROL PANEL	1	UN			85634517	
6	85638476	CABLE OUTLET PLATE	1	UN			85638476	
7	85638492	SPACER	1	UN			85638492	
8	85408599	RUBBER GROMMET D37	1	UN			85408599	
9	85408854	STOP	1	UN			85408854	
10	85639821	BASIC S4500 FRONT FACE	1	UN			85639821	167
11	17135484	CONNECTING TERMINAL	1	UN			17135484	
12	17135690	GROUND WIRES 16mm2 600mm	1	UN			17135690	
13	85402519	LAMP 12V BA9S TYPE	1	UN			85402519	
14	17130766	NUT M6	2	UN			17130766	
15	85636389	SCREW H M6x16	10	UN			85636389	

BASIC S4500 FRONT FACE

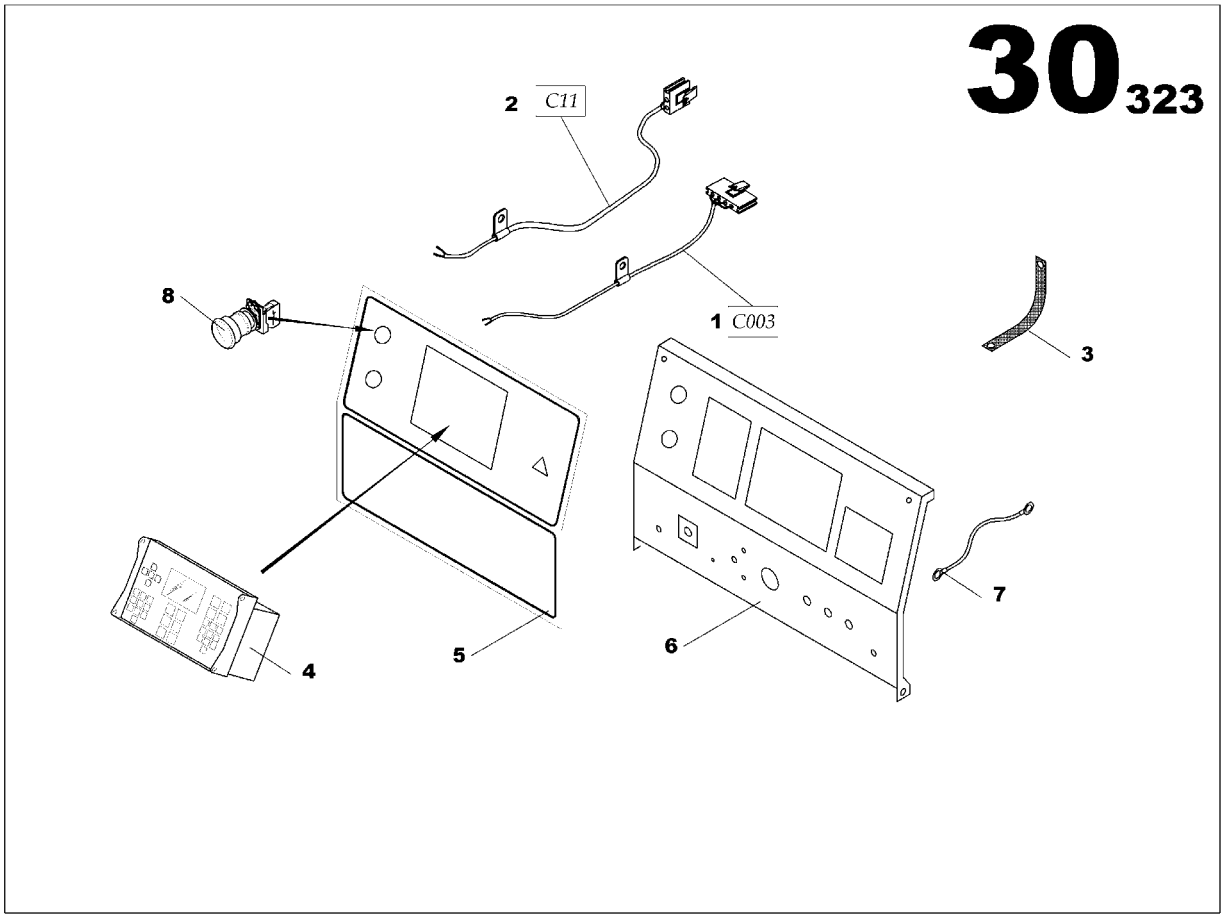

BASIC S4500 FRONT FACE
85639821

Part numbers listed are only parts used in this model

Item	Part No.	Description	Qty	Un	From SN	To SN	Order PN	Page
1	85504017	INTELLISYS WIRING LOOM 003	1	UN			85504017	
2	17135708	WIRING LOOM C11 L660	1	UN			17135708	
3	85504199	GROUND WIRE 10mm2 L :200mm	1	UN			85504199	
4	17135716	INTELLISYS DISPLAY *-SDMO PLATE SOFT 1.3*	1	UN			17135716	
5	17135732	PLASTIC PLATE L548xh310	1	UN			17135732	
6	85638310	CONTROL PANEL BRACKET	1	UN			85638310	
7	85634582	COVER STOP CONTROL PANEL S3500	2	UN			85634582	
8	85631422	EMERGENCY STOP BUTTON	1	UN			85631422	

BASIC S4500 FRONT FACE

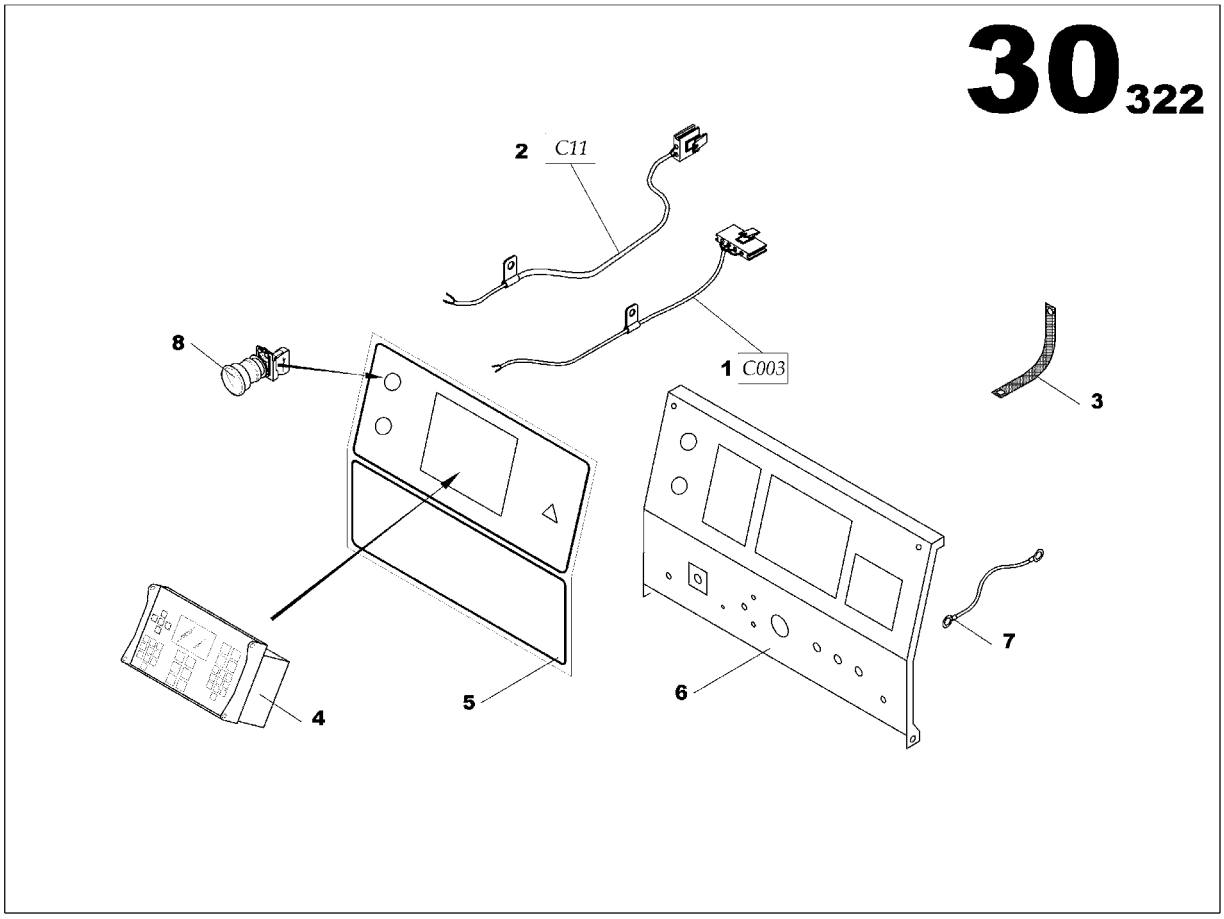

BASIC S4500 FRONT FACE
85639839

Part numbers listed are only parts used in this model

Item	Part No.	Description	Qty	Un	From SN	To SN	Order PN	Page
1	85504017	INTELLISYS WIRING LOOM 003	1	UN			85504017	
2	17135708	WIRING LOOM C11 L660	1	UN			17135708	
3	85504199	GROUND WIRE 10mm2 L :200mm	1	UN			85504199	
4	17133687	INTELLISYSTM DISPLAY *-IR PLATE SOFT 1.3*	1	UN			17133687	171
5	17135740	PLASTIC PLATE L548xh310	1	UN			17135740	
6	85638310	CONTROL PANEL BRACKET	1	UN			85638310	
7	85634582	COVER STOP CONTROL PANEL S3500	2	UN			85634582	
8	85631422	EMERGENCY STOP BUTTON	1	UN			85631422	

INTELLISYS tm DISPLAY

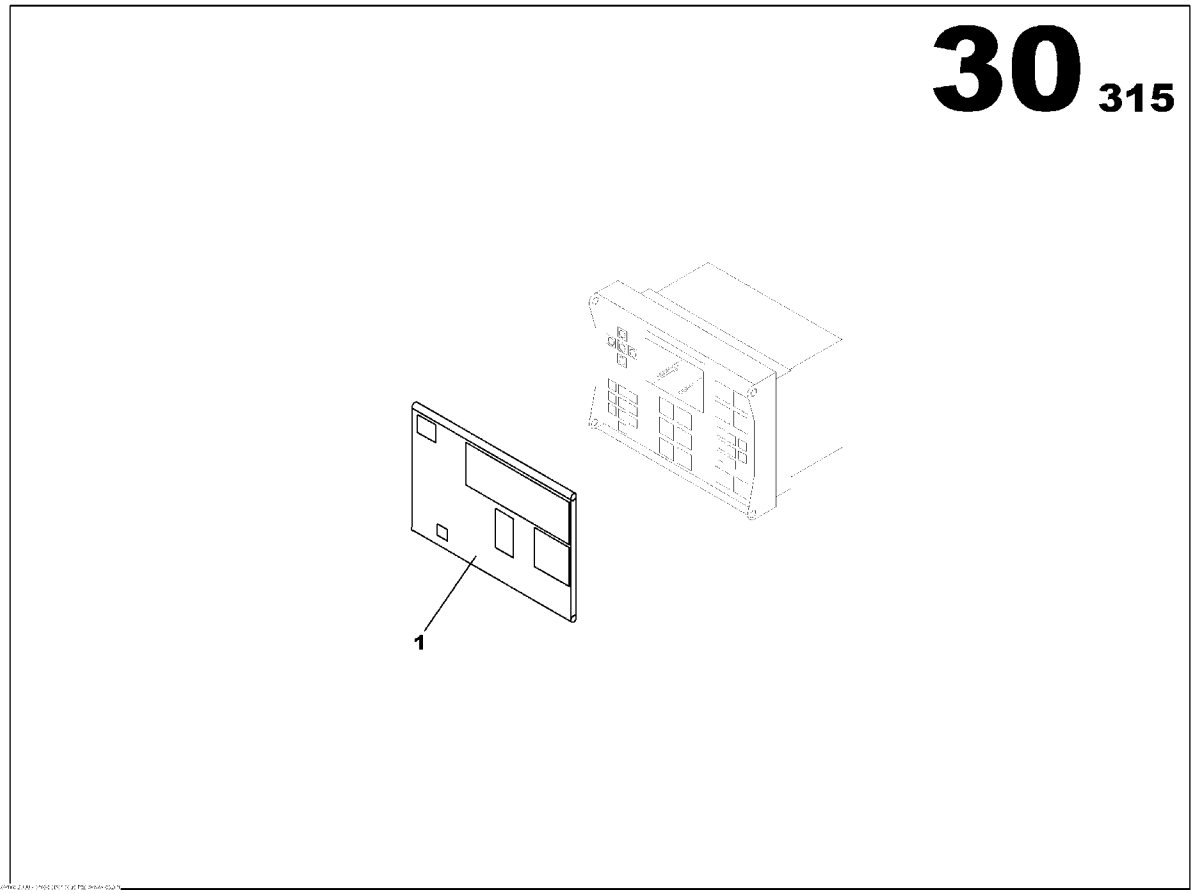

INTELLISYS tm DISPLAY
17133687

Part numbers listed are only parts used in this model

Item	Part No.	Description	Qty	Un	From SN	To SN	Order PN	Page
1	85626828	INTELLYSYS DISPLAY COVER	1	UN			85626828	

WIRING LOOM FUNCTION

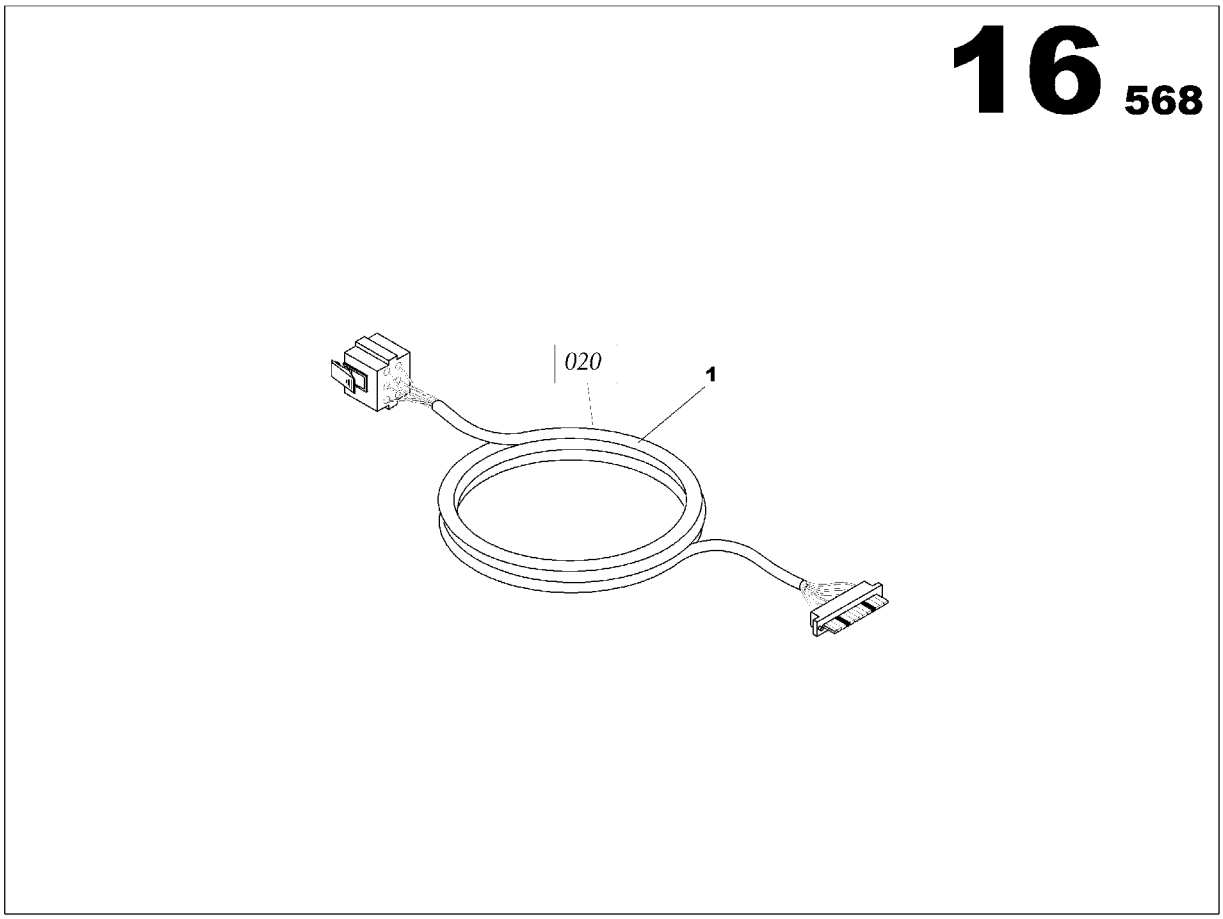

WIRING LOOM FUNCTION

Part numbers listed are only parts used in this model

Item	Part No.	Description	Qty	Un	From SN	To SN	Order PN	Page
1	17132846	INTELLISYS 020 WIRING LOOM ASSEMBLY JD 6081	1	UN			17132846	175
2	85635415	INTELLISYS 035 WIRING LOOM ASSEMBLY JD 6081	1	UN			85635415	177

INTELLISYS 020 WIRING LOOM ASSEMBLY JD 6081

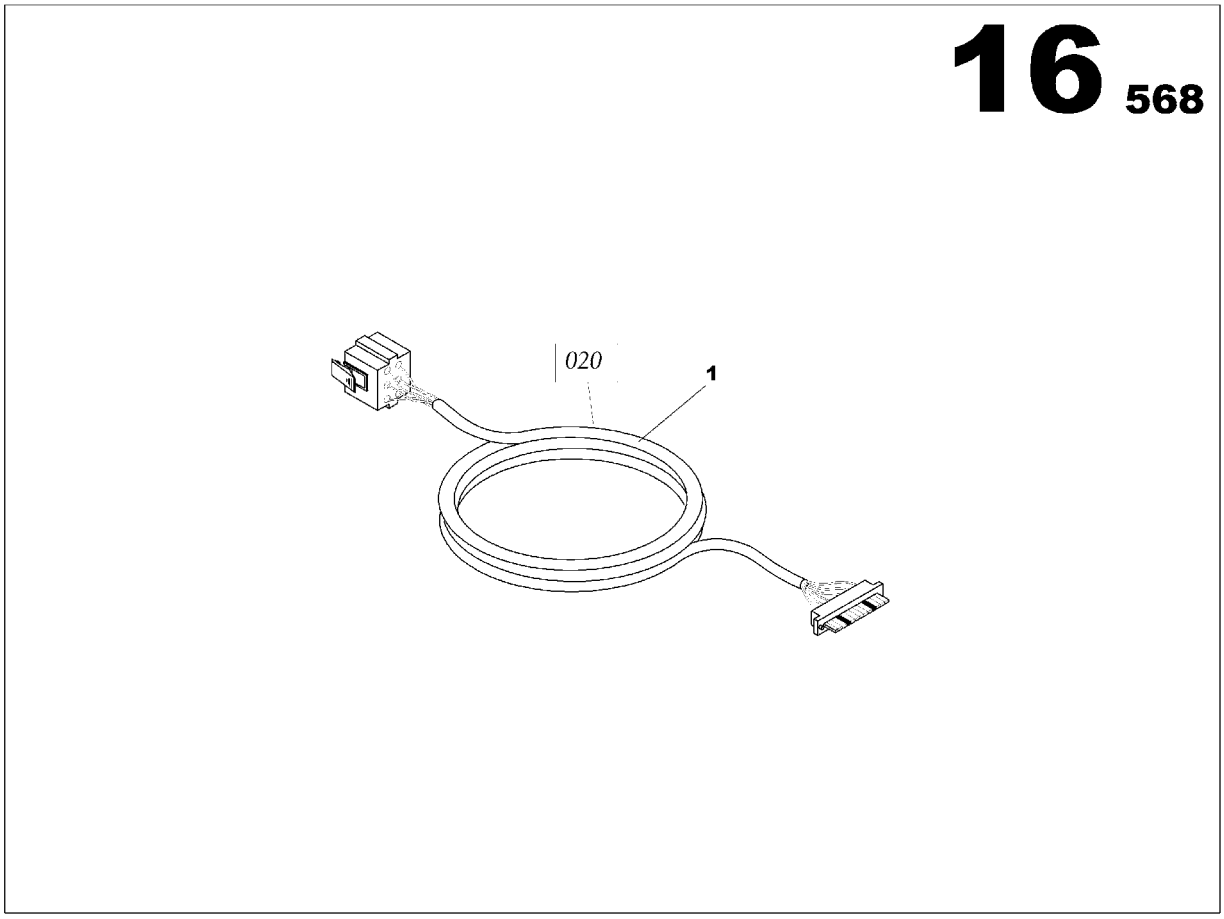

INTELLISYS 020 WIRING LOOM ASSEMBLY JD 6081
17132846

Part numbers listed are only parts used in this model

Item	Part No.	Description	Qty	Un	From SN	To SN	Order PN	Page
1	85410942	INTELLISYS WIRING LOOM 020	1	UN			85410942	

INTELLISYS 035 WIRING LOOM ASSEMBLY JD 6081

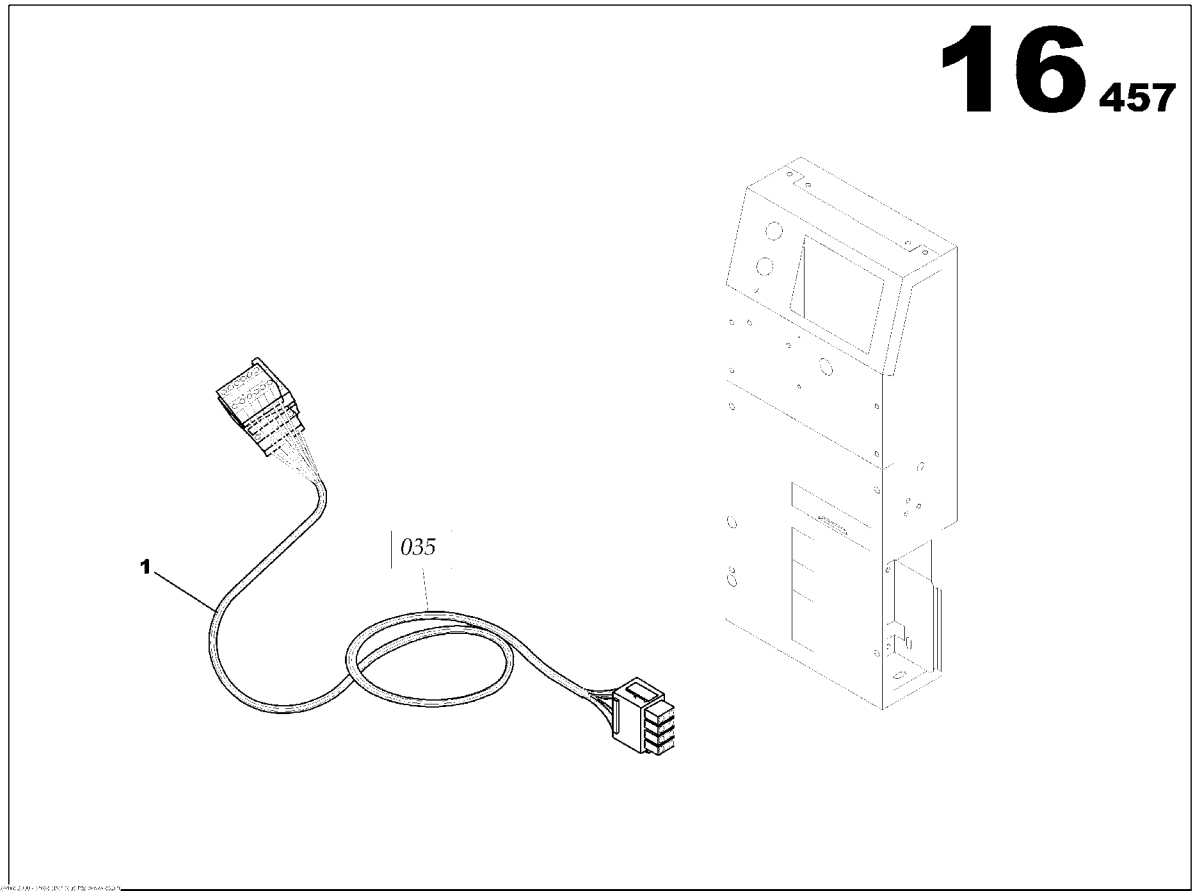

INTELLISYS 035 WIRING LOOM ASSEMBLY JD 6081
85635415

Part numbers listed are only parts used in this model

Item	Part No.	Description	Qty	Un	From SN	To SN	Order PN	Page
1	85635308	INTELLISYS WIRING LOOM 035	1	UN	02010280		85635308	

ELECTRIC SUPPLY FUNCTION

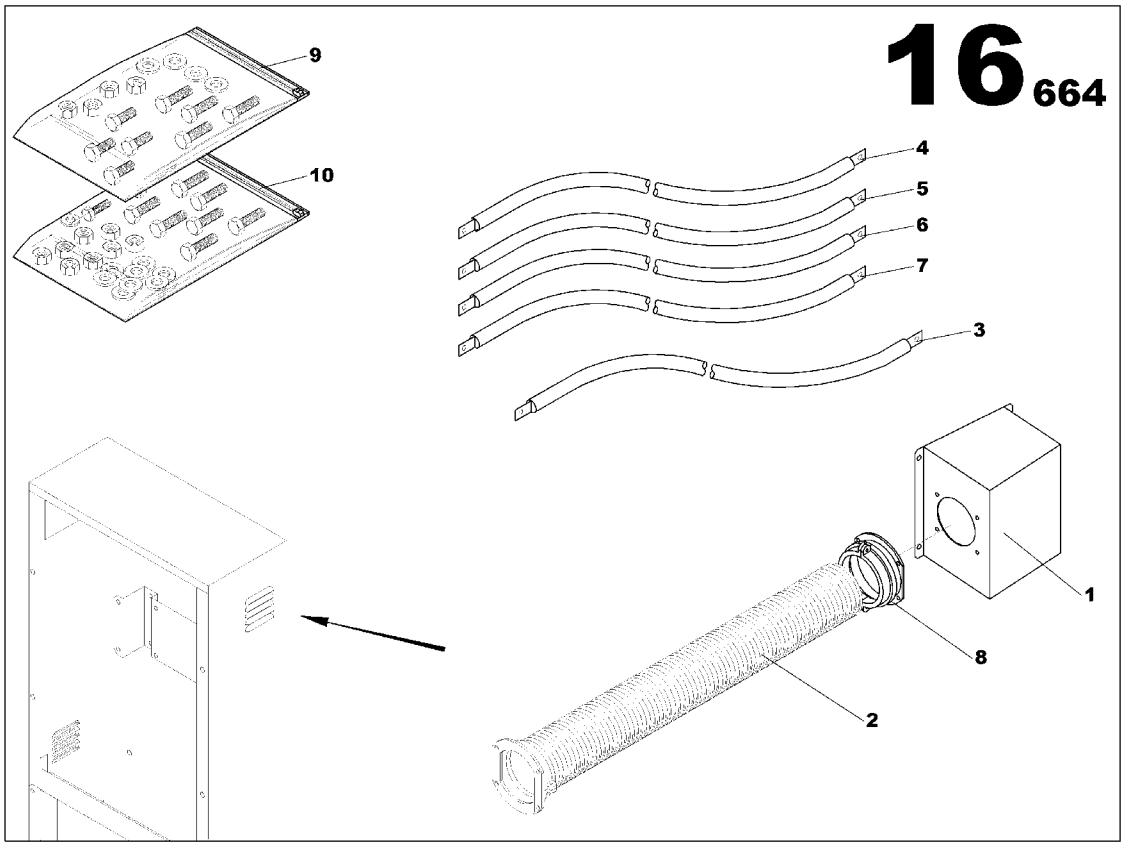

ELECTRIC SUPPLY FUNCTION

Part numbers listed are only parts used in this model

Item	Part No.	Description	Qty	Un	From SN	To SN	Order PN	Page
1	17139908	ELECTRIC CONNECTION 400A ASSEMBLY	1	UN			17139908	181
2	17140062	AIPR ASSEMBLY	1	UN			17140062	187
3	17132648	AIPR 400A ASSEMBLY	1	UN			17132648	197
4	17133083	RELEASE COIL ASSEMBLY	1	UN			17133083	211

ELECTRIC CONNECTION 400A ASSEMBLY

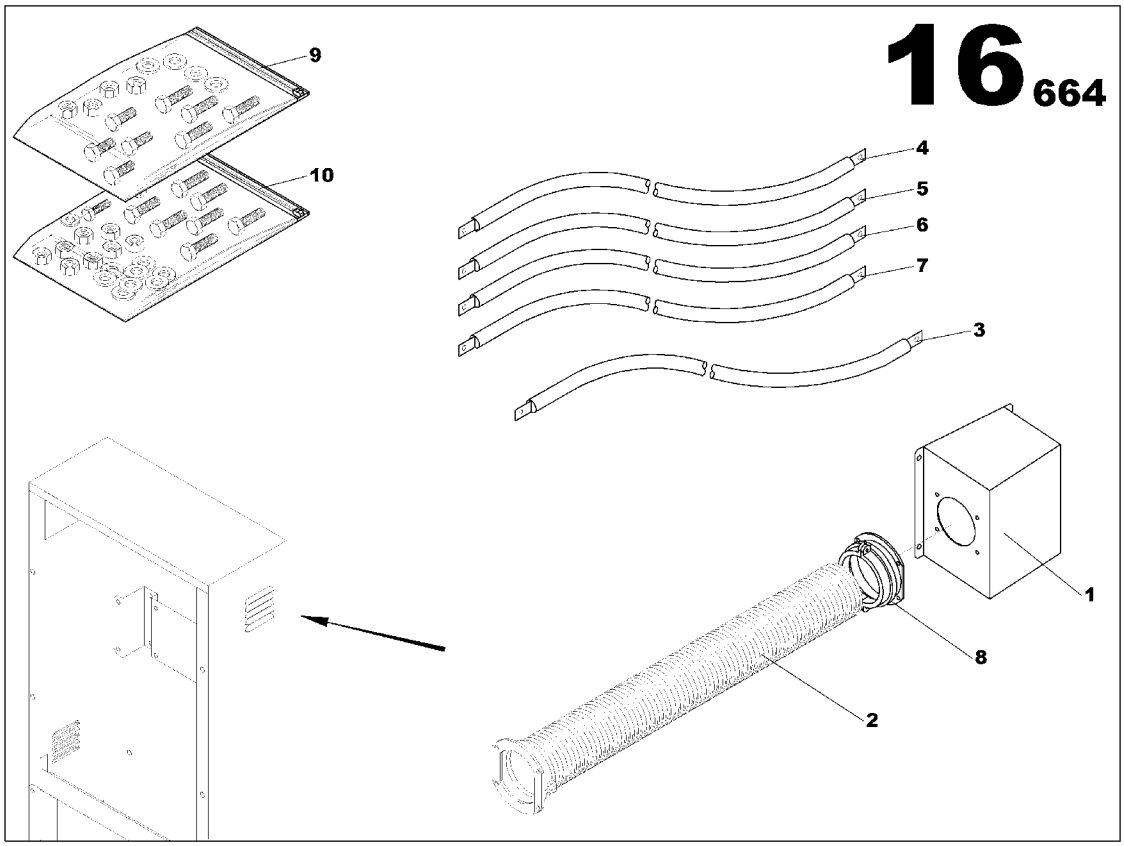

ELECTRIC CONNECTION 400A ASSEMBLY
17139908

Part numbers listed are only parts used in this model

Item	Part No.	Description	Qty	Un	From SN	To SN	Order PN	Page
1	17139817	CONNECTION HOUSING	1	UN			17139817	
2	85499499	ELECTRICAL SHAFT D48	0.66	ML			85499499	
3	17140328	EARTHING CABLE 50mm2 L1800	1	UN			17140328	
4	17140369	POWER CABLE AIPR 400A	1	UN			17140369	
5	17140377	POWER CABLE AIPR 400A	1	UN			17140377	
6	17140393	POWER CABLE AIPR 400A	1	UN			17140393	
7	17140401	POWER CABLE AIPR 400A	1	UN			17140401	
8	85499754	PIPE UNION PG70	1	UN			85499754	
9	85639383	SCREWS ASSEMBLY	1	UN			85639383	183
10	85639417	SCREWS ASSEMBLY	1	UN			85639417	185

SCREWS ASSEMBLY

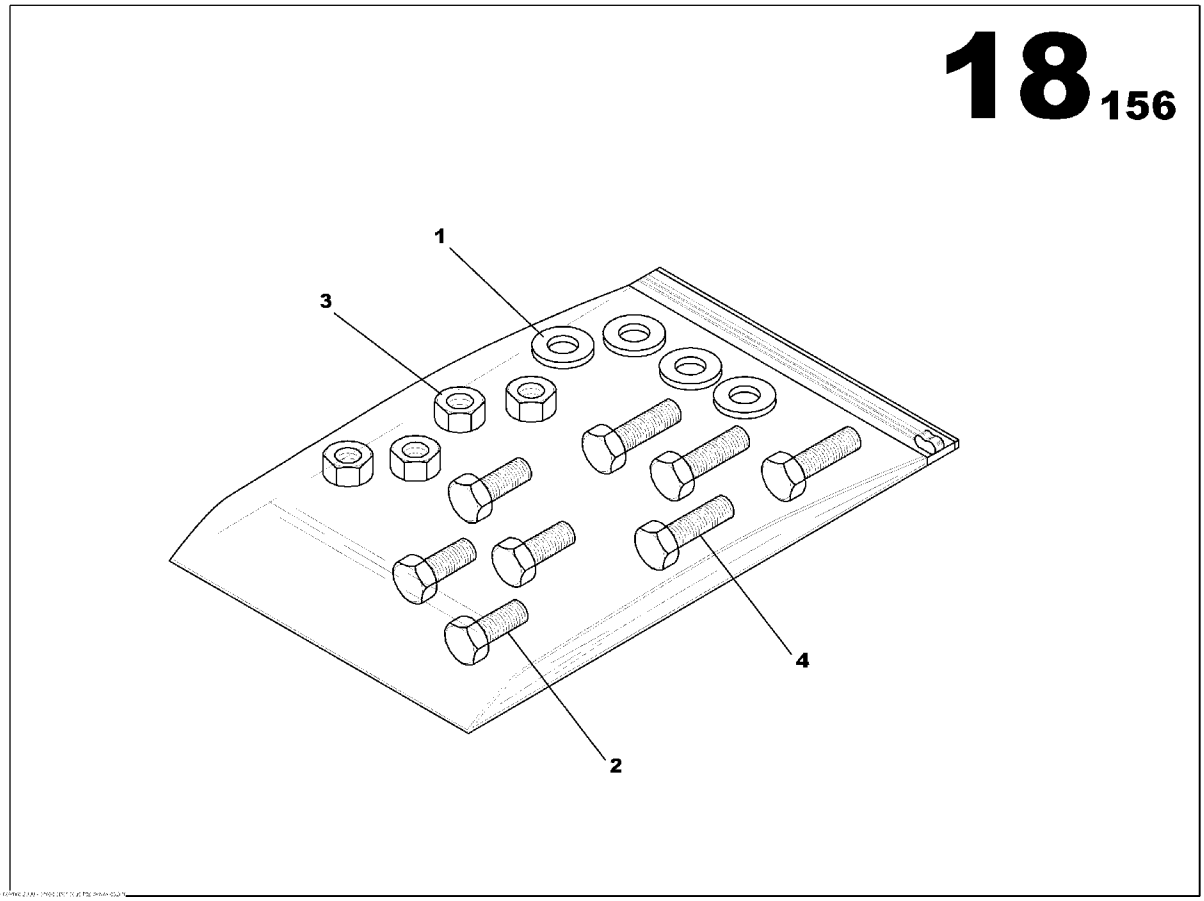

SCREWS ASSEMBLY
85639383

Part numbers listed are only parts used in this model

Item	Part No.	Description	Qty	Un	From SN	To SN	Order PN	Page
1	85636736	WASHER 6x12	4	UN			85636736	
2	85639318	SCREW H M6x16	4	UN	02010754		85639318	
3	85507911	NUT M6	4	UN			85507911	

SCREWS ASSEMBLY

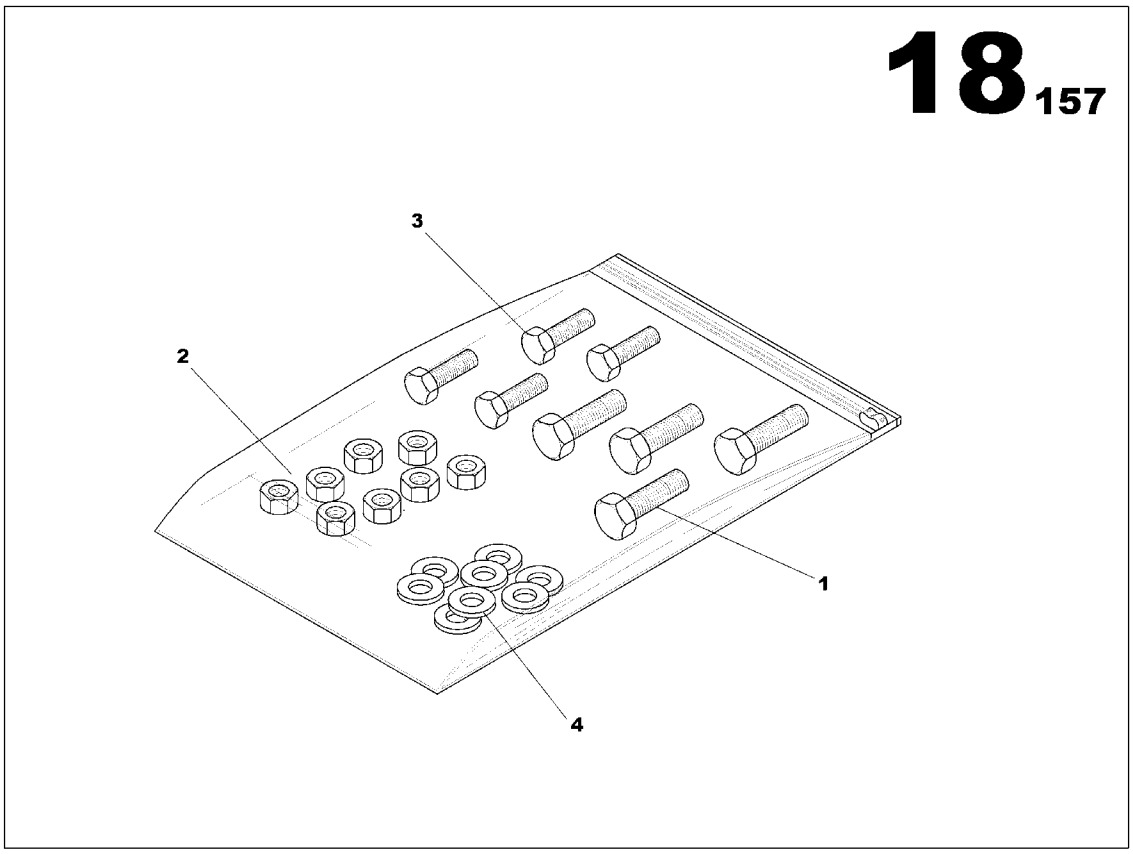

SCREWS ASSEMBLY
85639417

Part numbers listed are only parts used in this model

Item	Part No.	Description	Qty	Un	From SN	To SN	Order PN	Page
1	85636389	SCREW H M6x16	4	UN			85636389	
2	85429553	NUT M4	4	UN			85429553	
3	85636363	SCREW HS M4x16	4	UN			85636363	
4	85636728	WASHER 4x10	8	UN			85636728	

AIPR ASSEMBLY

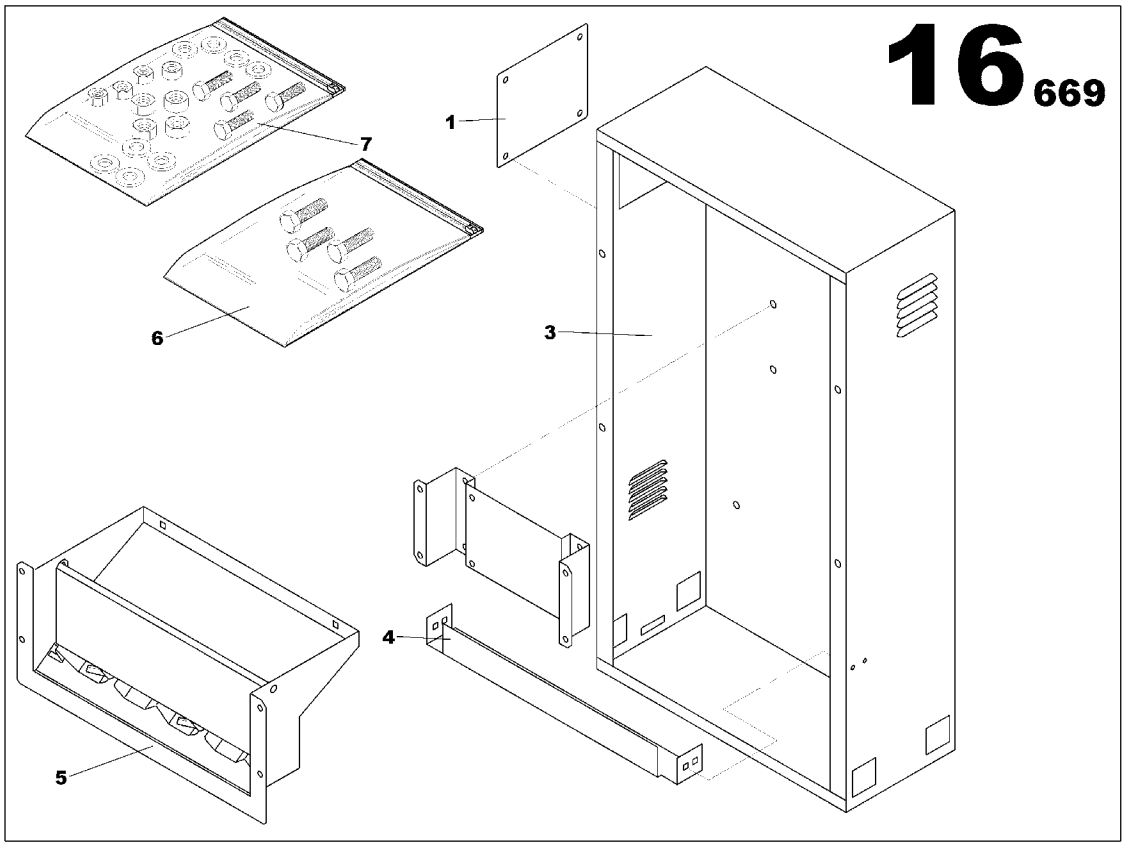

AIPR ASSEMBLY
17140062

Part numbers listed are only parts used in this model

Item	Part No.	Description	Qty	Un	From SN	To SN	Order PN	Page
1	17139676	GROUND WIRE 16mm2	1	UN			17139676	
2	17132192	GROUND WIRE 16mm2	1	UN			17132192	
3	17140054	AIPR ASSEMBLY	1	UN			17140054	189

AIPR ASSEMBLY

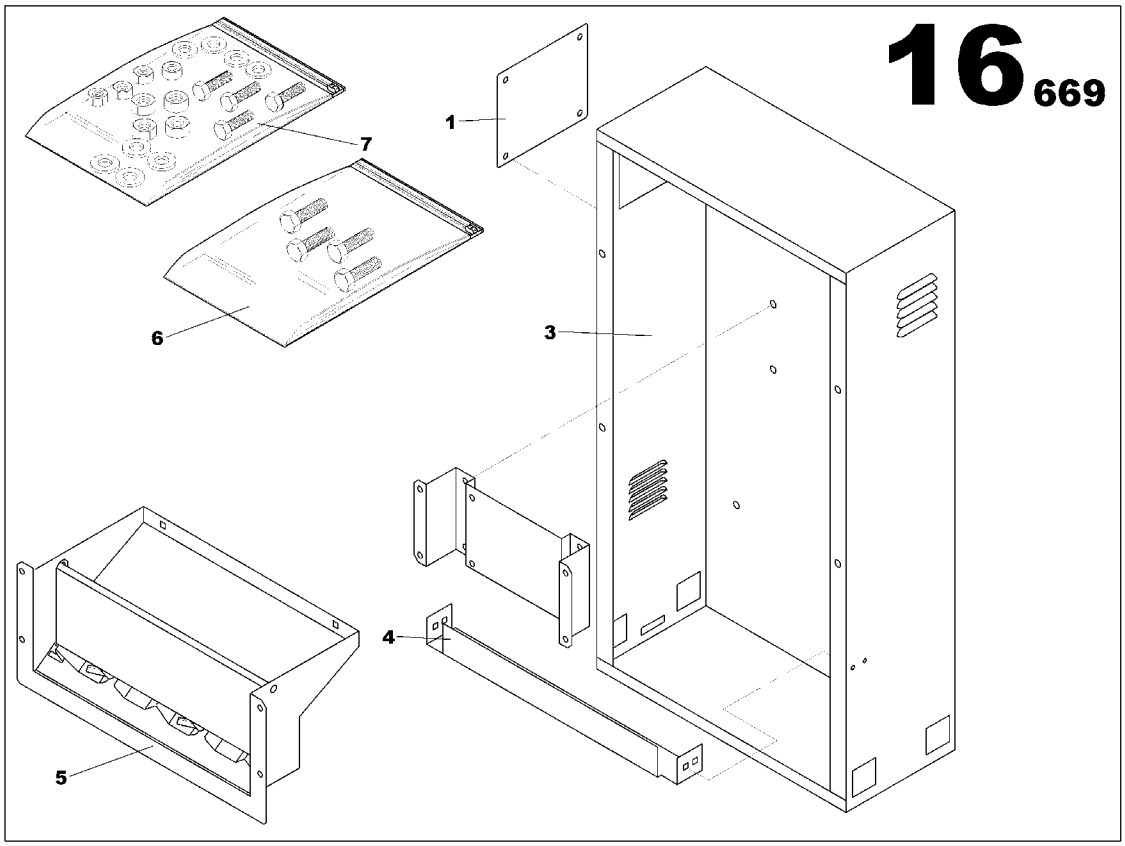

AIPR ASSEMBLY
17140054

Part numbers listed are only parts used in this model

Item	Part No.	Description	Qty	Un	From SN	To SN	Order PN	Page
1	17139858	PLATEN PANEL ALTERNATOR OPTION	1	UN			17139858	
2	17139882	CONTROL PANEL CIRCUIT BREAKER BRACKET	1	UN			17139882	
3	17139965	CIRCUIT BREAKER HOUSING	1	UN			17139965	
4	17140047	CABLE OUTLET PLATE	1	UN			17140047	
5	17140161	BRACKET CABLE COLLAR AIPR ASSEMBLY	1	UN			17140161	191
6	17140880	SCREWS MCPS AIPR ASSEMBLY	1	UN			17140880	193
7	17140898	SCREWS MCPS AIPR ASSEMBLY	1	UN			17140898	195

BRACKET CABLE COLLAR AIPR ASSEMBLY

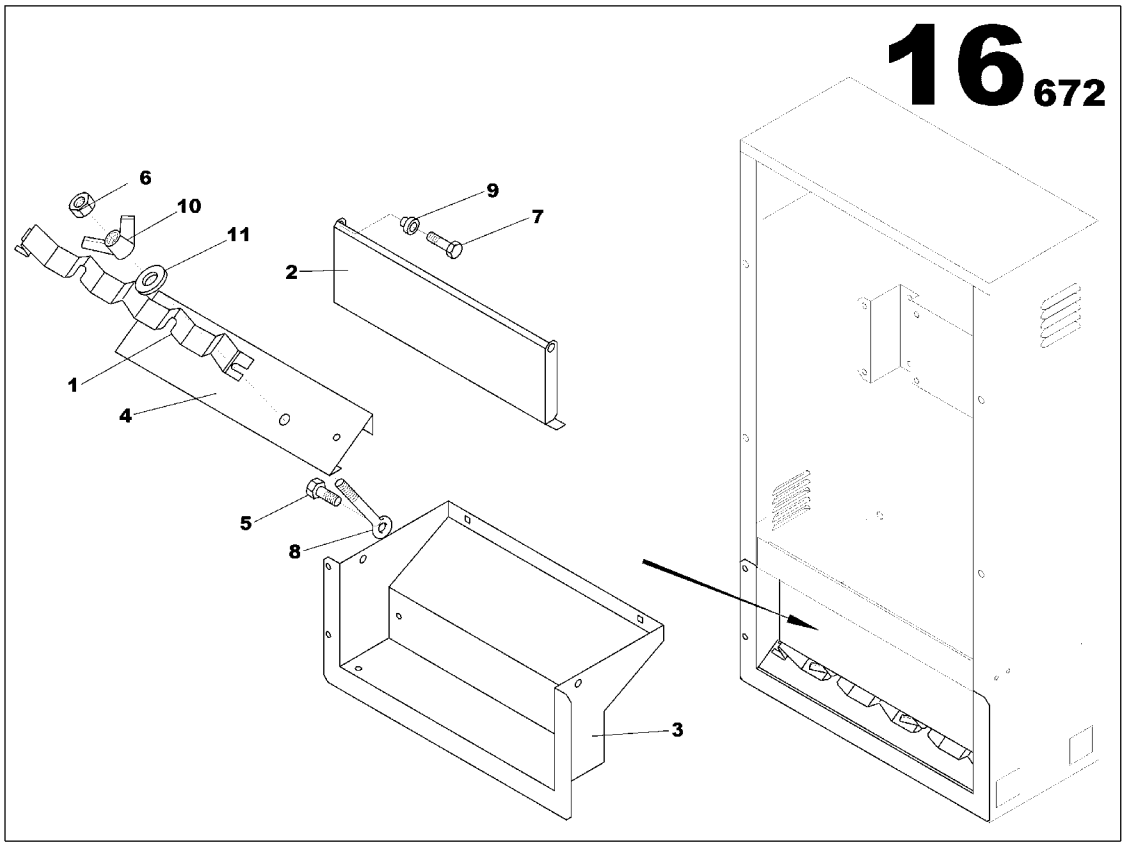

BRACKET CABLE COLLAR AIPR ASSEMBLY
17140161

Part numbers listed are only parts used in this model

Item	Part No.	Description	Qty	Un	From SN	To SN	Order PN	Page
1	17139684	CABLE AIPR BRACKET	1	UN			17139684	
2	17140096	TOLE BASCULANTE AIPR	1	UN			17140096	
3	17140146	CABLE PASSAGE PANEL M405	1	UN			17140146	
4	17140153	CABLE COLLAR AIPR BRACKET	1	UN			17140153	
5	85429744	SCREW H M8x25	2	UN			85429744	
6	17133240	NUT M8	2	UN			17133240	
7	85636389	SCREW H M6x16	2	UN			85636389	
8	17133257	SCREW	2	UN			17133257	
9	85636660	SLEAVE BEARING	2	UN			85636660	
10	85410140	WING NUT M8	2	UN			85410140	
11	85430213	WASHER 8x18	2	UN			85430213	

SCREWS MCPS AIPR ASSEMBLY

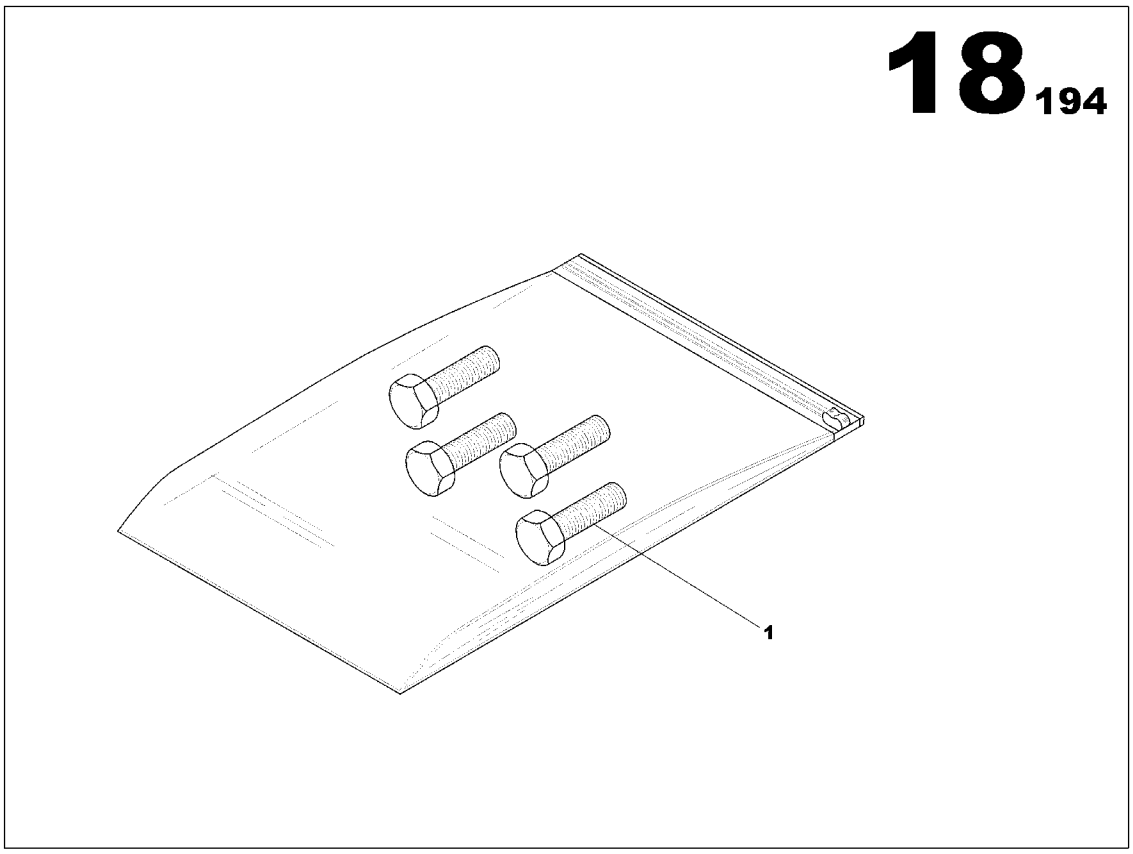

SCREWS MCPS AIPR ASSEMBLY
17140880

Part numbers listed are only parts used in this model

Item	Part No.	Description	Qty	Un	From SN	To SN	Order PN	Page
1	85636389	SCREW H M6x16	4	UN			85636389	

SCREWS MCPS AIPR ASSEMBLY

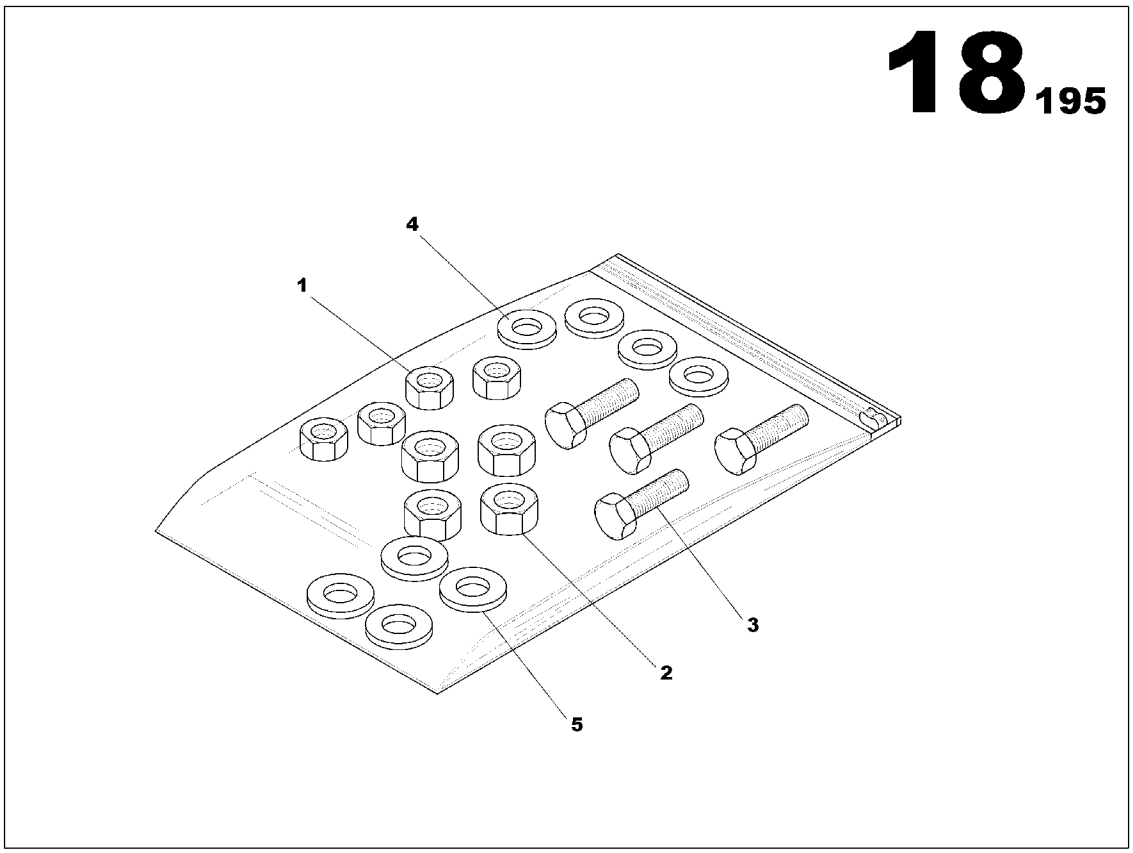

SCREWS MCPS AIPR ASSEMBLY
17140898

Part numbers listed are only parts used in this model

Item	Part No.	Description	Qty	Un	From SN	To SN	Order PN	Page
1	85507911	NUT M6	4	UN			85507911	
2	85509743	NUT M8	4	UN			85509743	
3	85636371	SCREW H M8x20	4	UN			85636371	
4	85429793	WASHER 6x14	4	UN			85429793	
5	85636751	WASHER 8x16	4	UN			85636751	

AIPR 400A ASSEMBLY

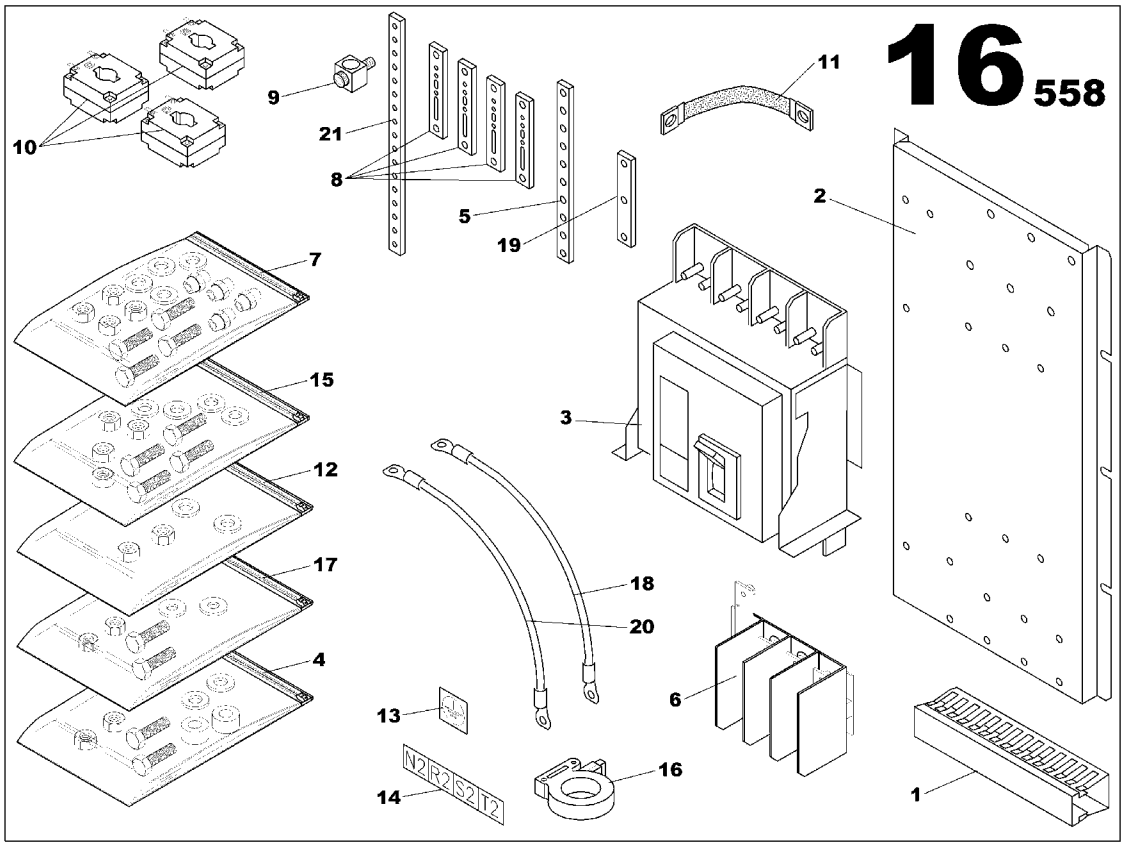

AIPR 400A ASSEMBLY
17132648

Part numbers listed are only parts used in this model

Item	Part No.	Description	Qty	Un	From SN	To SN	Order PN	Page
1	17133018	WIRING LOOM SUPPORT	0.5	ML			17133018	
2	17132457	CIRCUIT BREAKER AIPR BRACKET	1	UN			17132457	
3	85417905	COMPACT CIRCUIT BREAKER 4x160A	1	UN			85417905	
4	17133265	SCREWS MCPS AIPR ASSEMBLY	1	UN			17133265	203
5	17132416	COPPER BAR 5x25	1	UN			17132416	
6	17133117	SEPARATOR SCREEN ASSEMBLY	1	UN			17133117	199
7	17133299	SCREWS MCPS AIPR ASSEMBLY	1	UN			17133299	209
8	17133125	COPPER BAR 10x30	4	UN			17133125	
9	17133133	TERMINALS	1	UN			17133133	
10	85639037	CURRENT TRANSFORMER 400/5	3	UN			85639037	
11	17132192	GROUND WIRE 16mm2	1	UN			17132192	
12	17133273	SCREWS MCPS AIPR ASSEMBLY	1	UN			17133273	205
13	85409084	STICKER EARTH SYMBOL	1	UN			85409084	
14	85409126	STICKER POWER LINK	1	UN			85409126	
15	17133281	SCREWS MCPS AIPR ASSEMBLY	1	UN			17133281	207
16	85635886	TORE	1	UN			85635886	
17	85636454	SCREWS ASSEMBLY	1	UN			85636454	201
18	17132879	NEUTRAL/EARTH SYSTEM CABLE 25mm2 Gr/Ye	1	UN			17132879	
19	85416915	COPPER BAR 10x30	1	UN			85416915	
20	85638849	NEUTRAL/EARTH SYSTEM CABLE 35mm2	1	UN			85638849	
21	17135039	COPPER BAR 5x30	1	UN			17135039	

SEPARATOR SCREEN ASSEMBLY

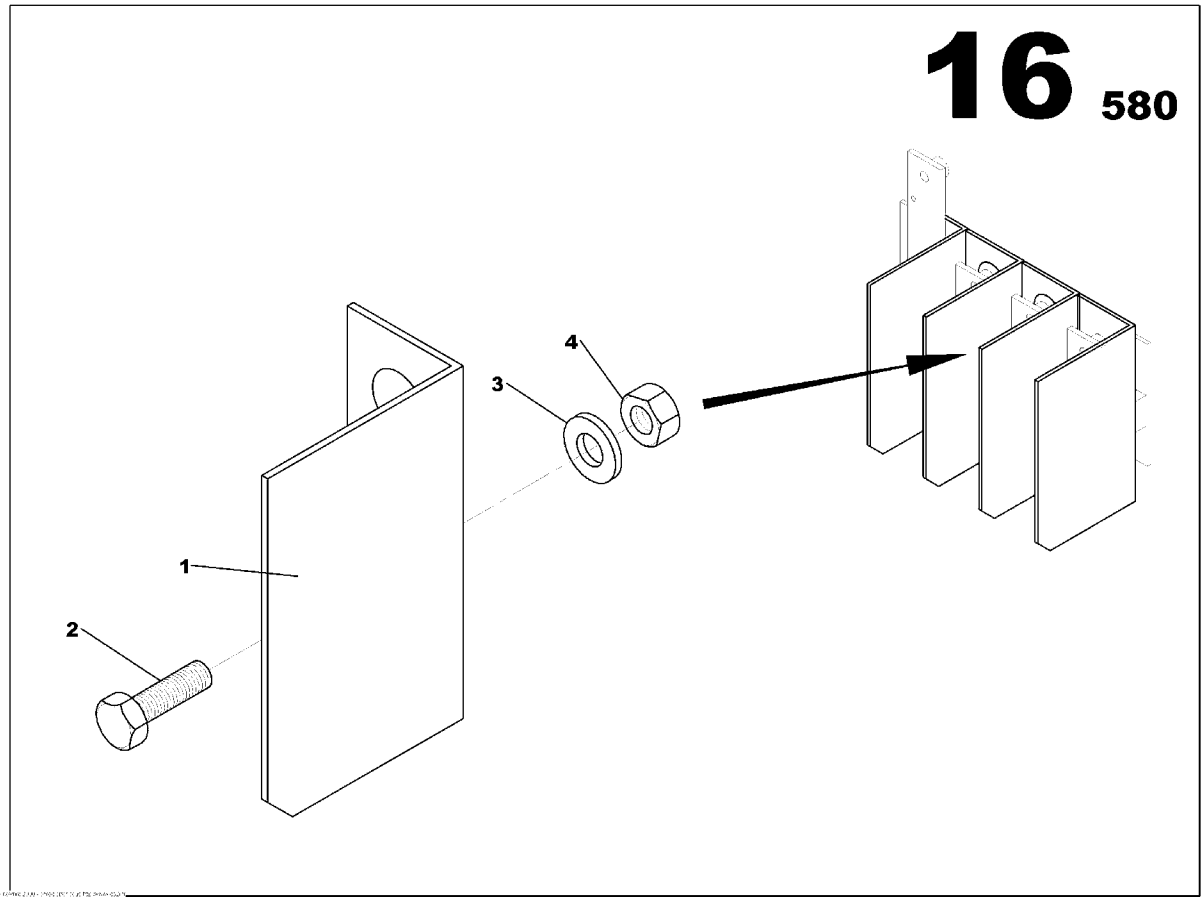

SEPARATOR SCREEN ASSEMBLY
17133117

Part numbers listed are only parts used in this model

Item	Part No.	Description	Qty	Un	From SN	To SN	Order PN	Page
1	17133109	PHASE ISOLATOR AIPR	4	UN			17133109	
2	85636389	SCREW H M6x16	4	UN			85636389	
3	85429793	WASHER 6x14	4	UN			85429793	
4	85507911	NUT M6	4	UN			85507911	

SCREWS ASSEMBLY

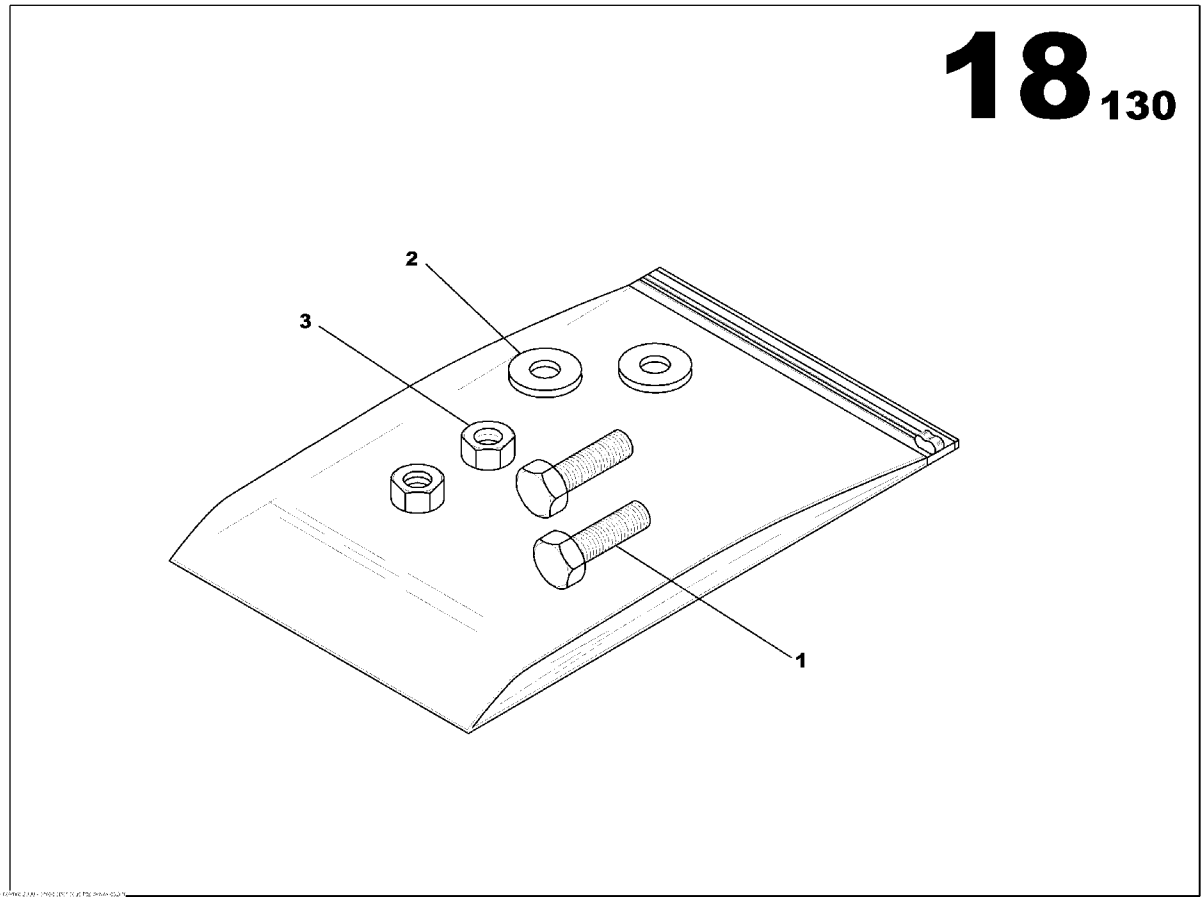

SCREWS ASSEMBLY
85636454

Part numbers listed are only parts used in this model

Item	Part No.	Description	Qty	Un	From SN	To SN	Order PN	Page
1	85636363	SCREW HS M4x16	2	UN			85636363	
2	85636728	WASHER 4x10	2	UN			85636728	
3	85429553	NUT M4	2	UN			85429553	

SCREWS MCPS AIPR ASSEMBLY

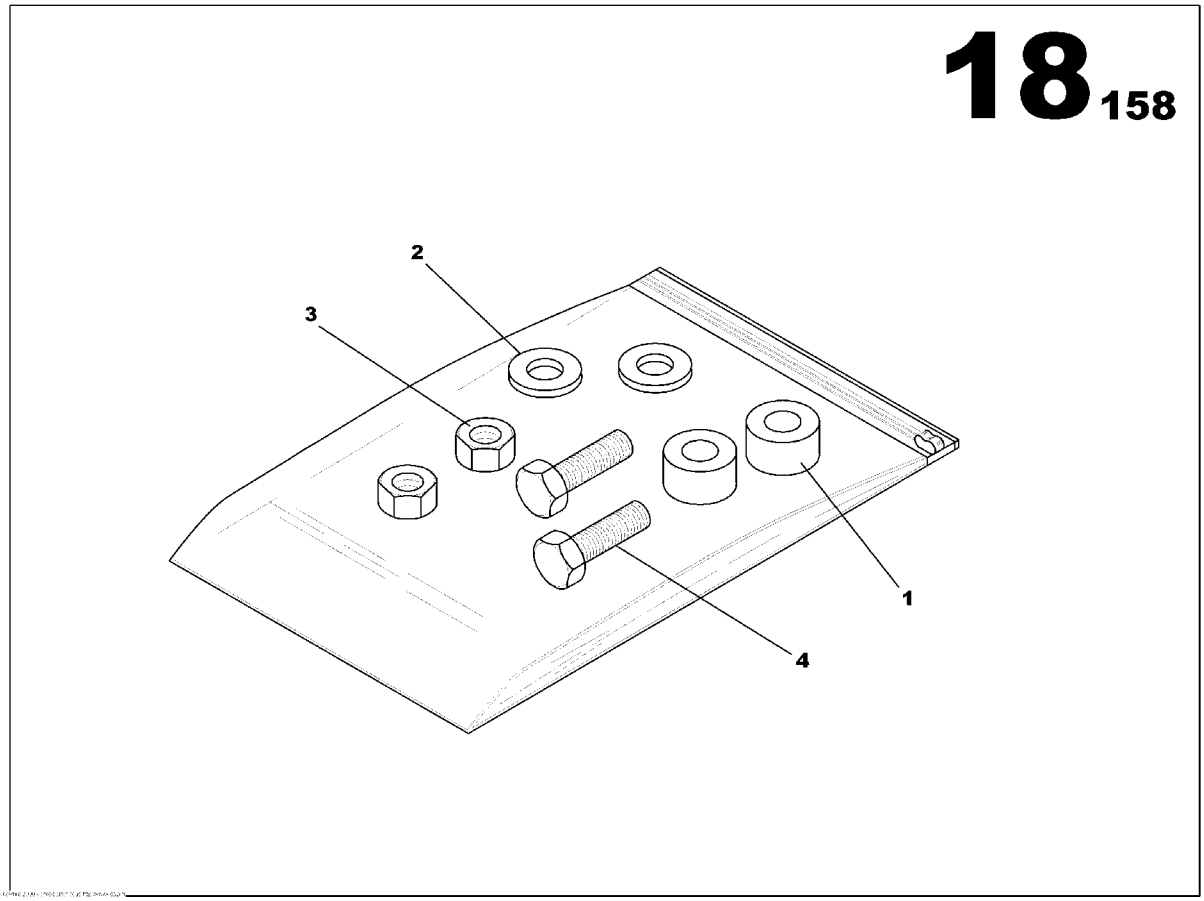

SCREWS MCPS AIPR ASSEMBLY
17133265

Part numbers listed are only parts used in this model

Item	Part No.	Description	Qty	Un	From SN	To SN	Order PN	Page
1	85639680	SPACER	2	UN			85639680	
2	85636736	WASHER 6x12	2	UN			85636736	
3	85507911	NUT M6	2	UN			85507911	
4	85636389	SCREW H M6x16	2	UN			85636389	

SCREWS MCPS AIPR ASSEMBLY

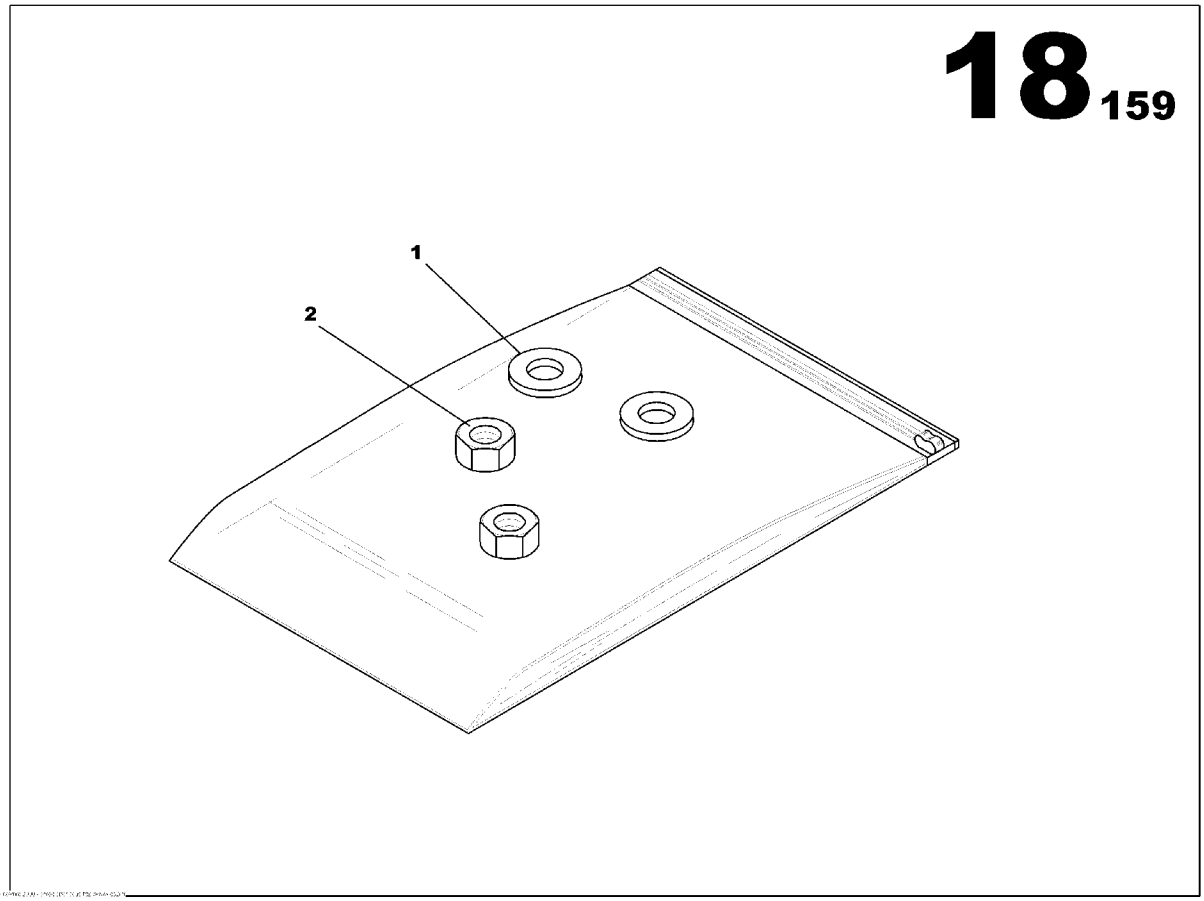

SCREWS MCPS AIPR ASSEMBLY
17133273

Part numbers listed are only parts used in this model

Item	Part No.	Description	Qty	Un	From SN	To SN	Order PN	Page
1	85636736	WASHER 6x12	2	UN			85636736	
2	85507911	NUT M6	2	UN			85507911	

SCREWS MCPS AIPR ASSEMBLY

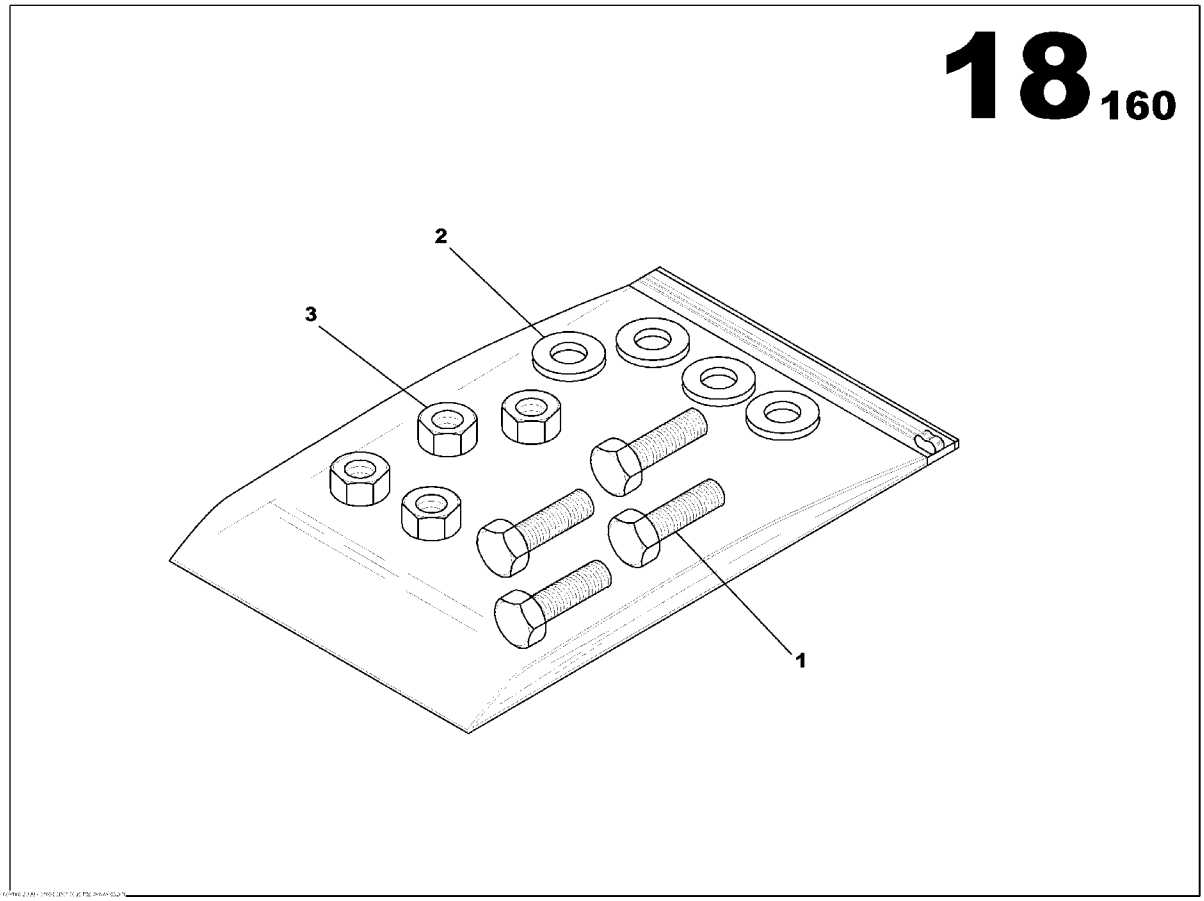

SCREWS MCPS AIPR ASSEMBLY
17133281

Part numbers listed are only parts used in this model

Item	Part No.	Description	Qty	Un	From SN	To SN	Order PN	Page
1	85636389	SCREW H M6x16	4	UN			85636389	
2	85636736	WASHER 6x12	4	UN			85636736	
3	85507911	NUT M6	4	UN			85507911	

SCREWS MCPS AIPR ASSEMBLY

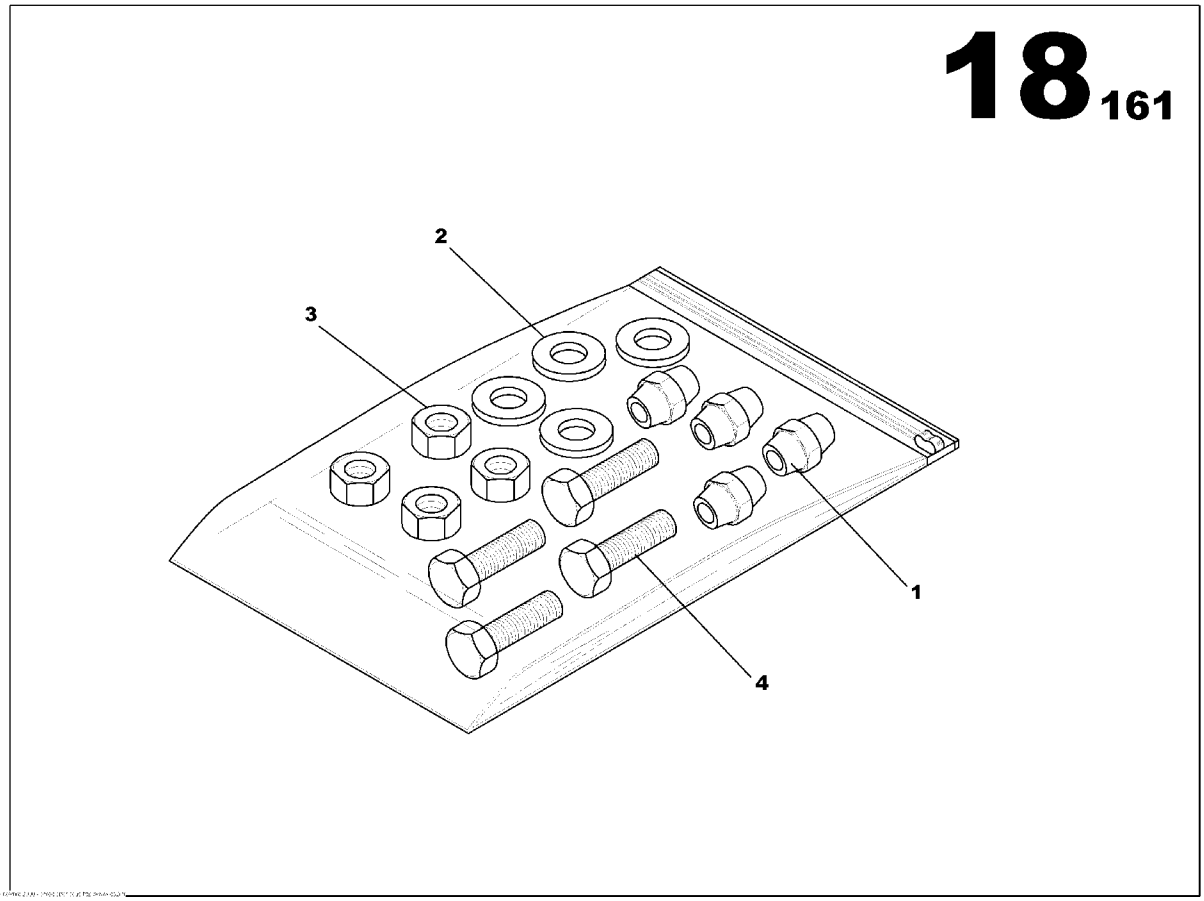

SCREWS MCPS AIPR ASSEMBLY
17133299

Part numbers listed are only parts used in this model

Item	Part No.	Description	Qty	Un	From SN	To SN	Order PN	Page
1	17133067	INSULATION PIN	4	UN			17133067	
2	85636736	WASHER 6x12	4	UN			85636736	
3	85507911	NUT M6	4	UN			85507911	
4	85636389	SCREW H M6x16	4	UN			85636389	

RELEASE COIL ASSEMBLY

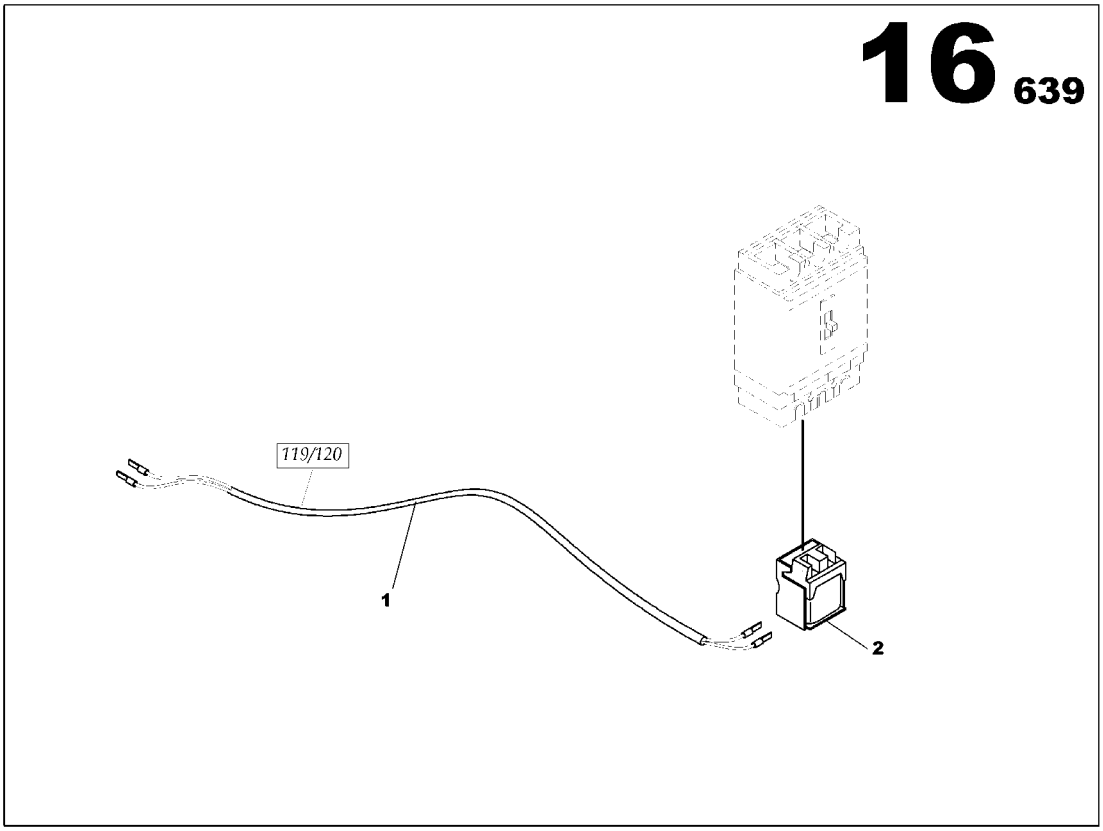

RELEASE COIL ASSEMBLY
17133083

Part numbers listed are only parts used in this model

Item	Part No.	Description	Qty	Un	From SN	To SN	Order PN	Page
1	17132812	INTELLISYS WIRING LOOM 119/120	1	UN			17132812	
2	85408573	CIRCUIT BREAKER SHUNT RELEASE COIL 200/280VAC	1	UN			85408573	

DOCUMENTATION OPTION

DOCUMENTATION OPTION

Part numbers listed are only parts used in this model

Item	Part No.	Description	Qty	Un	From SN	To SN	Order PN	Page

AUTO START OPTION

AUTO START OPTION

Part numbers listed are only parts used in this model

Item	Part No.	Description	Qty	Un	From SN	To SN	Order PN	Page
1	17137126	WATER PREHEATING ASSEMBLY 1000W	1	UN			17137126	217
2	85636173	EXTERNAL AMF PREDISPOSITION OPTION *-Information*	1	UN			85636173	223
3	17140724	WATER PREHEATING OPTION	1	UN			17140724	
4	17140732	BATTERY CHARGER OPTION	1	UN			17140732	
5	85636256	CURRENT SENSOR OPTION	1	UN			85636256	225
6	17133075	AUXILIARY CONTACT ASSEMBLY	1	UN			17133075	227
7	85635399	INTELLISYS 016 WIRING LOOM ASSEMBLY JD 6081	1	UN			85635399	229

WATER PREHEATING ASSEMBLY 1000W

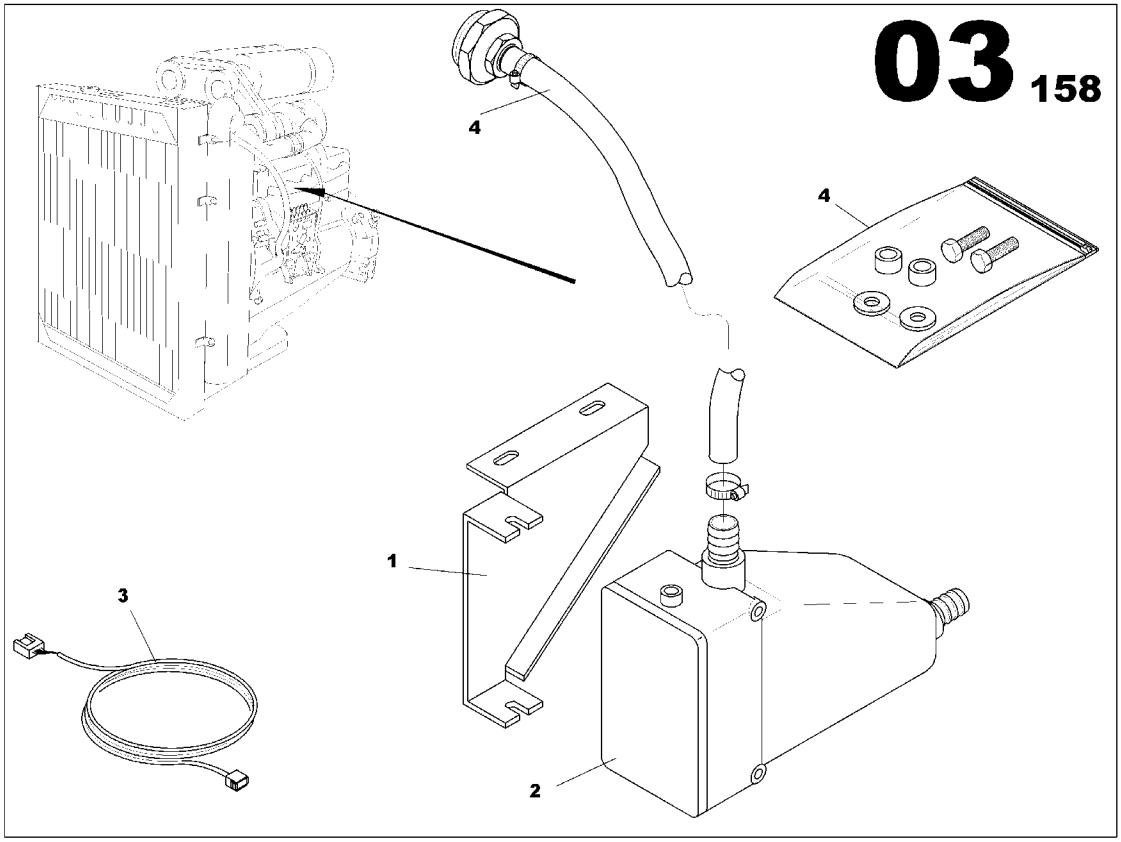

WATER PREHEATING ASSEMBLY 1000W
17137126

Part numbers listed are only parts used in this model

Item	Part No.	Description	Qty	Un	From SN	To SN	Order PN	Page
1	17137134	WATER PREHEATING ASSEMBLY	1	UN			17137134	219

WATER PREHEATING ASSEMBLY

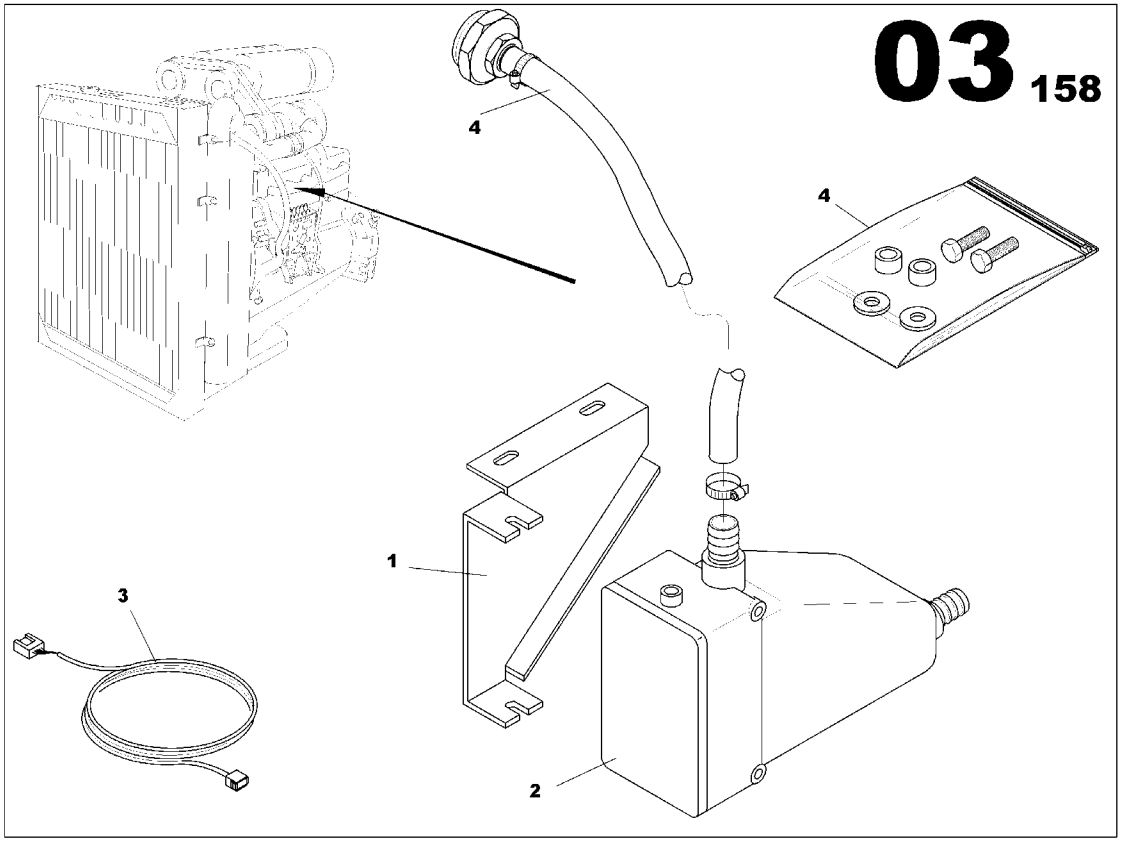

WATER PREHEATING ASSEMBLY
17137134

Part numbers listed are only parts used in this model

Item	Part No.	Description	Qty	Un	From SN	To SN	Order PN	Page
1	85430023	PREHEATER HOUSING BRACKET VOLVO 7/10L/12L	1	UN			85430023	
2	17137167	RESISTANCE HOUSING 1000W	1	UN			17137167	
3	85629475	BLOCK HEATER WIRING	1	UN			85629475	
4	17140906	SCREWS ASSEMBLY	1	UN			17140906	221

SCREWS ASSEMBLY

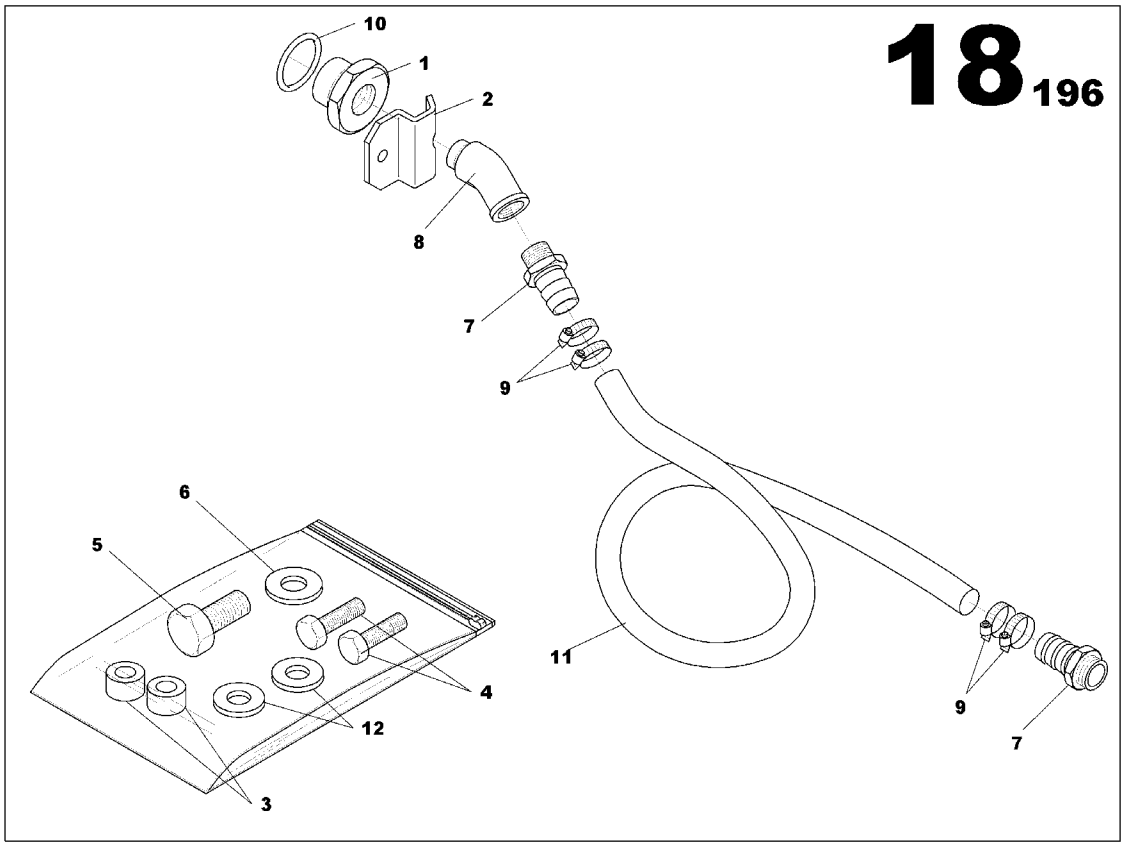

SCREWS ASSEMBLY
17140906

Part numbers listed are only parts used in this model

Item	Part No.	Description	Qty	Un	From SN	To SN	Order PN	Page
1	85423291	COOLANT PREHEAT CONNECTION VO 740	1	UN			85423291	
2	85421287	WATER HEATING CONNECTION STANDING HANGER	1	UN			85421287	
3	85421204	SPACER Th10 D15	2	UN			85421204	
4	85429744	SCREW H M8x25	2	UN			85429744	
5	85430247	SCREW H M10x20	1	UN			85430247	
6	85430163	WASHER D10x22	1	UN			85430163	
7	85430254	PIPE UNION MAL/MAL 1/2G	2	UN			85430254	
8	85423051	PIPE UNION ELBOW 45° MAL/FEM 1/2G	2	UN			85423051	
9	85409423	HOSE CLIP D20/32	4	UN			85409423	
10	85421766	O RING	1	UN			85421766	
11	85424844	FLEXIBLE HOSE D16x26	0.5	ML			85424844	
12	85430270	WASHER 8X22	2	UN			85430270	

EXTERNAL AMF PREDISPOSITION OPTION

EXTERNAL AMF PREDISPOSITION OPTION
85636173

Part numbers listed are only parts used in this model

Item	Part No.	Description	Qty	Un	From SN	To SN	Order PN	Page

CURRENT SENSOR OPTION

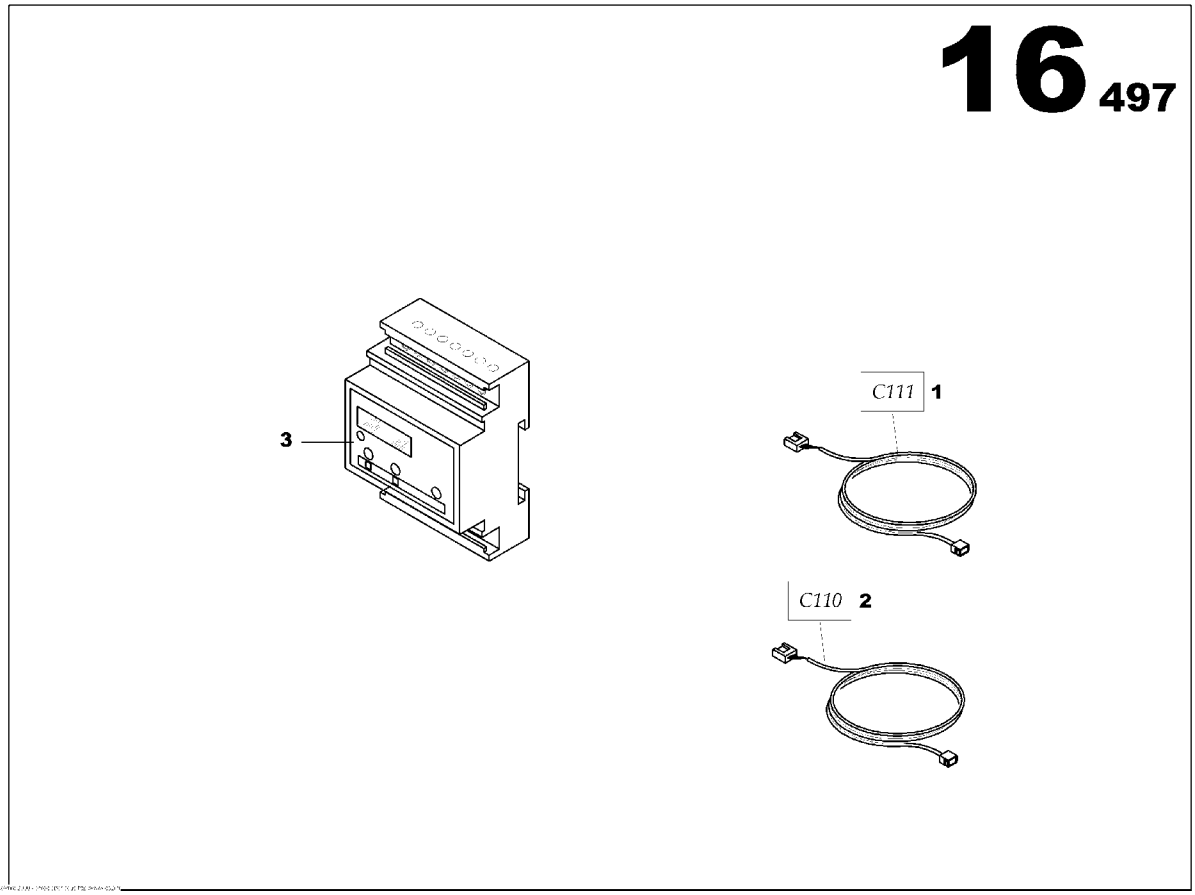

CURRENT SENSOR OPTION
85636256

Part numbers listed are only parts used in this model

Item	Part No.	Description	Qty	Un	From SN	To SN	Order PN	Page
1	85630663	WIRING LOOM C111 L800	1	UN			85630663	
2	85630721	WIRING LOOM C110 L300	1	UN			85630721	
3	85623809	CURRENT SENSOR MODULE	1	UN			85623809	

AUXILIARY CONTACT ASSEMBLY

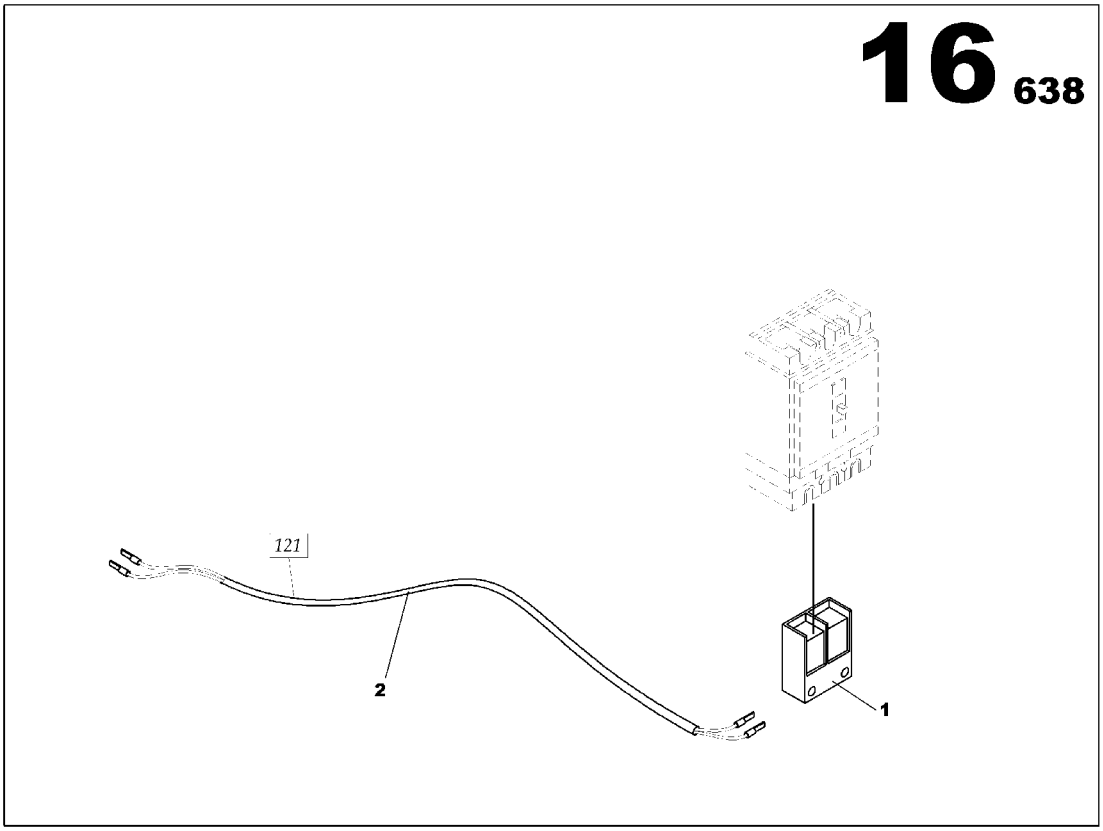

AUXILIARY CONTACT ASSEMBLY
17133075

Part numbers listed are only parts used in this model

Item	Part No.	Description	Qty	Un	From SN	To SN	Order PN	Page
1	17132820	INTELLISYS WIRING LOOM 121	1	UN			17132820	
2	85408581	AUXILARY CONTACT	1	UN			85408581	

INTELLISYS 016 WIRING LOOM ASSEMBLY JD 6081

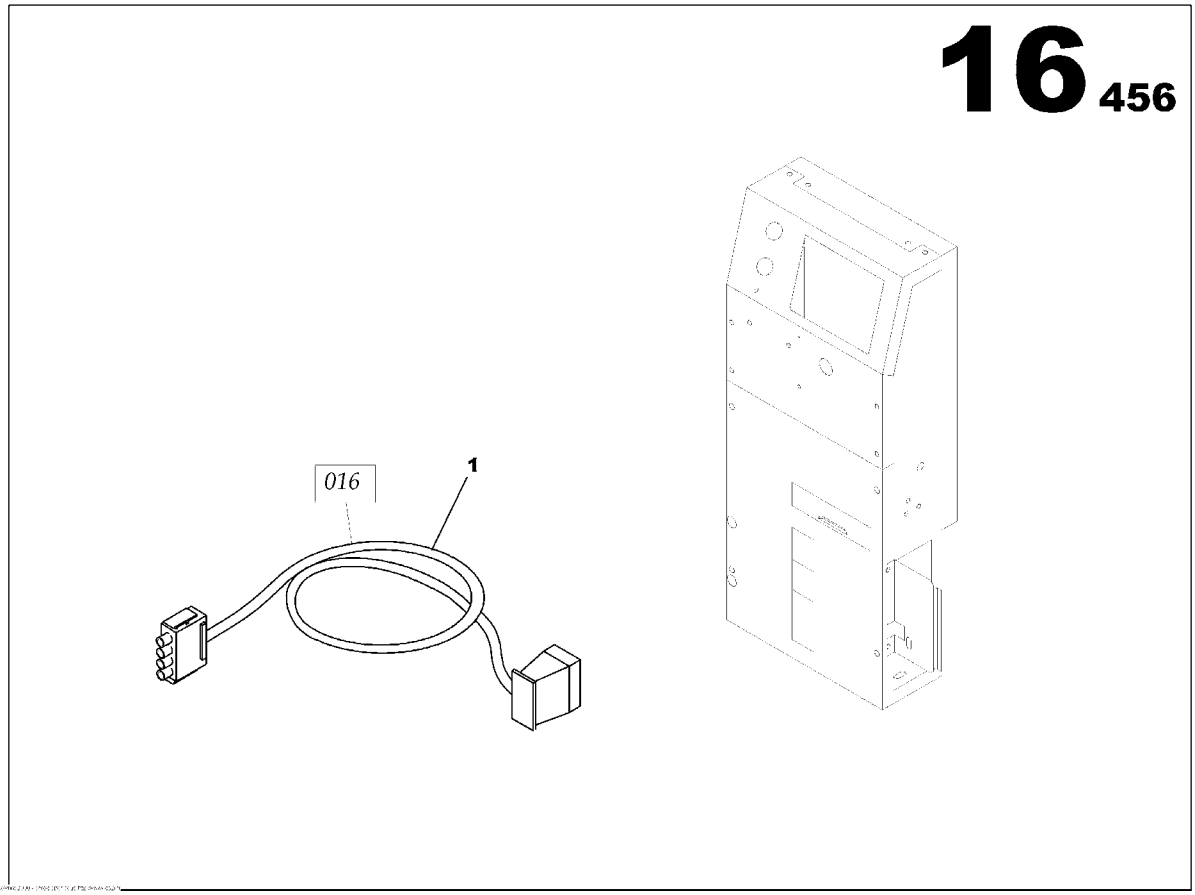

INTELLISYS 016 WIRING LOOM ASSEMBLY JD 6081
85635399

Part numbers listed are only parts used in this model

Item	Part No.	Description	Qty	Un	From SN	To SN	Order PN	Page
1	85635316	INTELLISYS WIRING LOOM 016	1	UN	02009106		85635316	

3 WAYS FUEL VALVES OPTION

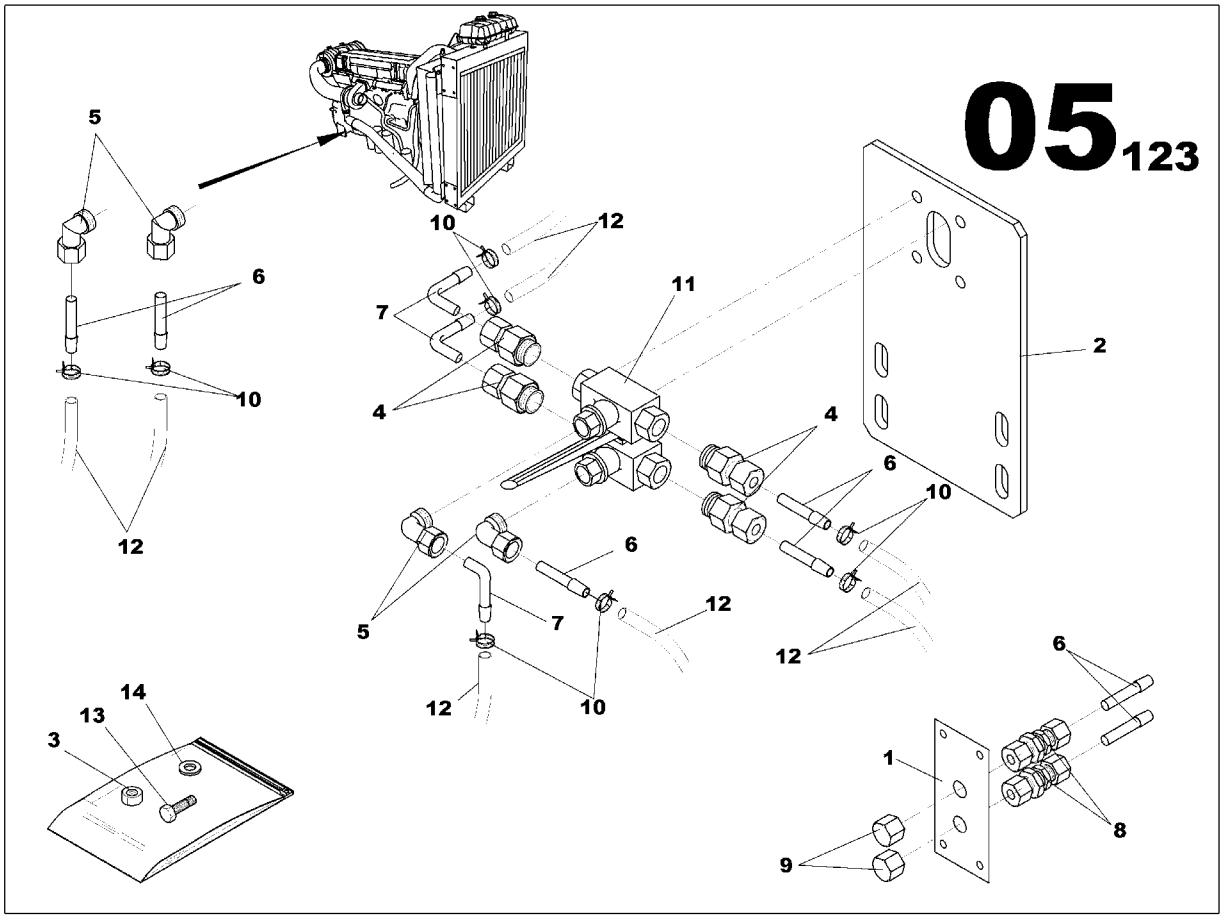

3 WAYS FUEL VALVES OPTION

Part numbers listed are only parts used in this model

Item	Part No.	Description	Qty	Un	From SN	To SN	Order PN	Page
1	17137415	3 WAYS FUEL VALVE ASSEMBLY	1	UN			17137415	233

3 WAYS FUEL VALVE ASSEMBLY

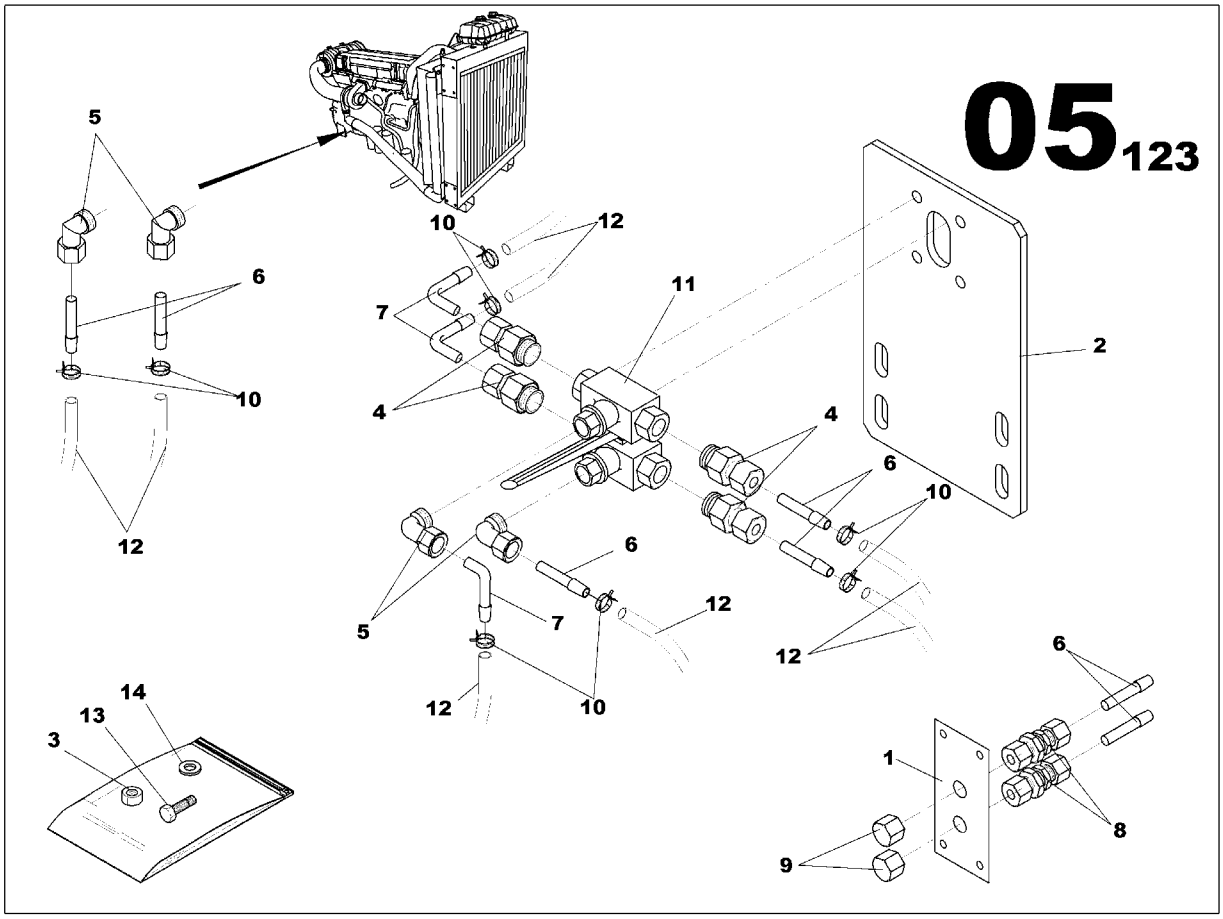

3 WAYS FUEL VALVE ASSEMBLY
17137415

Part numbers listed are only parts used in this model

Item	Part No.	Description	Qty	Un	From SN	To SN	Order PN	Page
1	17137407	3 WAYS FUEL VALVE ASSEMBLY	1	UN			17137407	235

3 WAYS FUEL VALVE ASSEMBLY

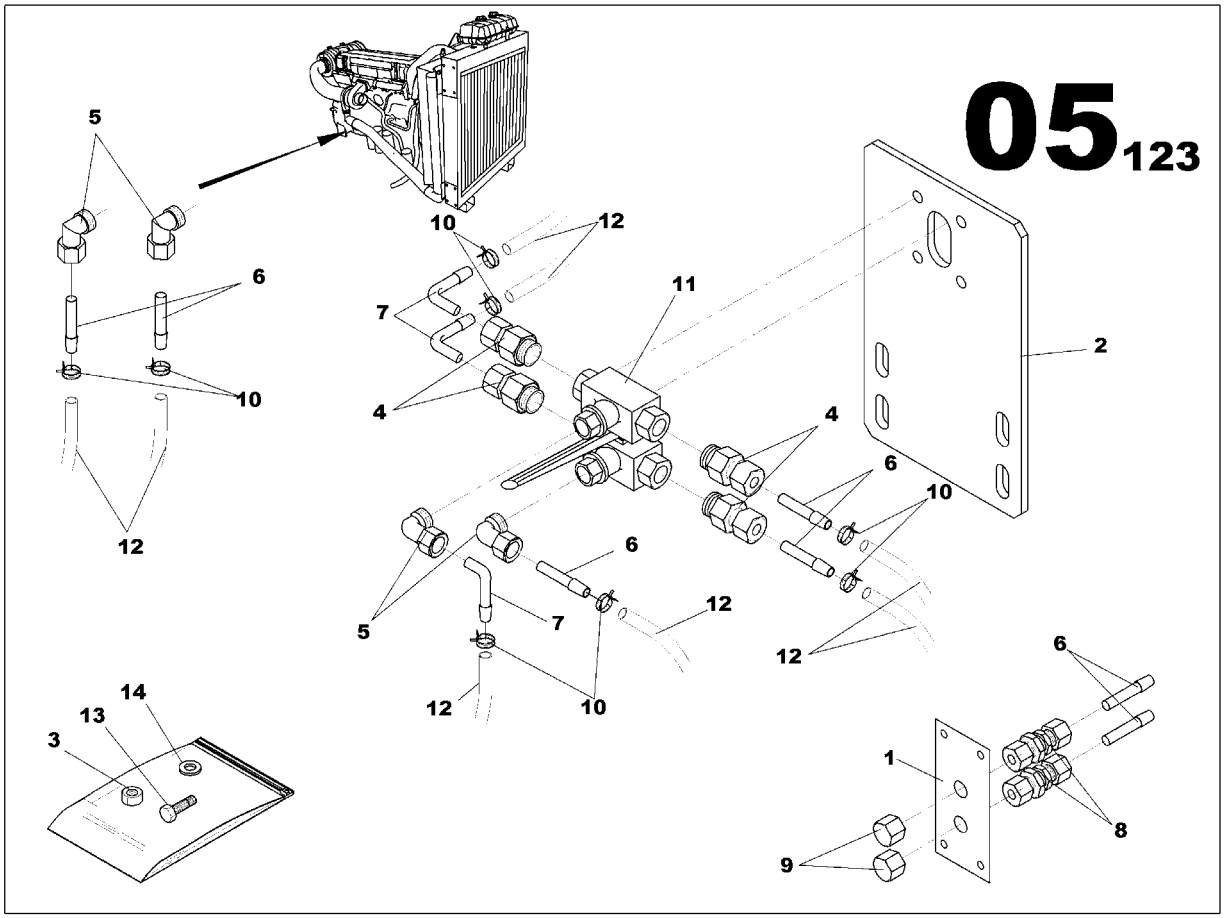

3 WAYS FUEL VALVE ASSEMBLY
17137407

Part numbers listed are only parts used in this model

Item	Part No.	Description	Qty	Un	From SN	To SN	Order PN	Page
1	85424174	EXTERIOR FILLING CONNECTION BRACKET	1	UN			85424174	
2	17137316	3 WAYS FUEL VALVE BRACKET	1	UN			17137316	
3	85429959	NUT M5	4	UN			85429959	
4	85430619	PIPE UNION REDUCER MAL/FEM 3/8G D10	4	UN			85430619	
5	85622660	PIPE UNION ELBOW 90° MAL/FEM 3/8G	4	UN			85622660	
6	85430627	PIPE UNION MAL/MAL D10	7	UN			85430627	
7	85430635	PIPE UNION ELBOW MAL/MAL D10	3	UN			85430635	
8	85423283	PIPE UNION FEM/FEM D10	2	UN			85423283	
9	85623007	PLUG D10	2	UN			85623007	
10	85509727	SPRING CLAMP D17/19	8	UN			85509727	
11	85631802	3 WAYS VALVE	1	UN			85631802	
12	85430643	FLEXIBLE HOSE D9x15	7.2	ML			85430643	
13	85632206	SCREW H M5x45	4	UN			85632206	
14	85429967	WASHER 5x12	8	UN			85429967	

REINFORCED INSULATION OPTION

REINFORCED INSULATION OPTION

Part numbers listed are only parts used in this model

Item	Part No.	Description	Qty	Un	From SN	To SN	Order PN	Page
1	85428936	ALTERNATOR LS 462L	1	UN			85428936	239

ALTERNATOR LS 462L

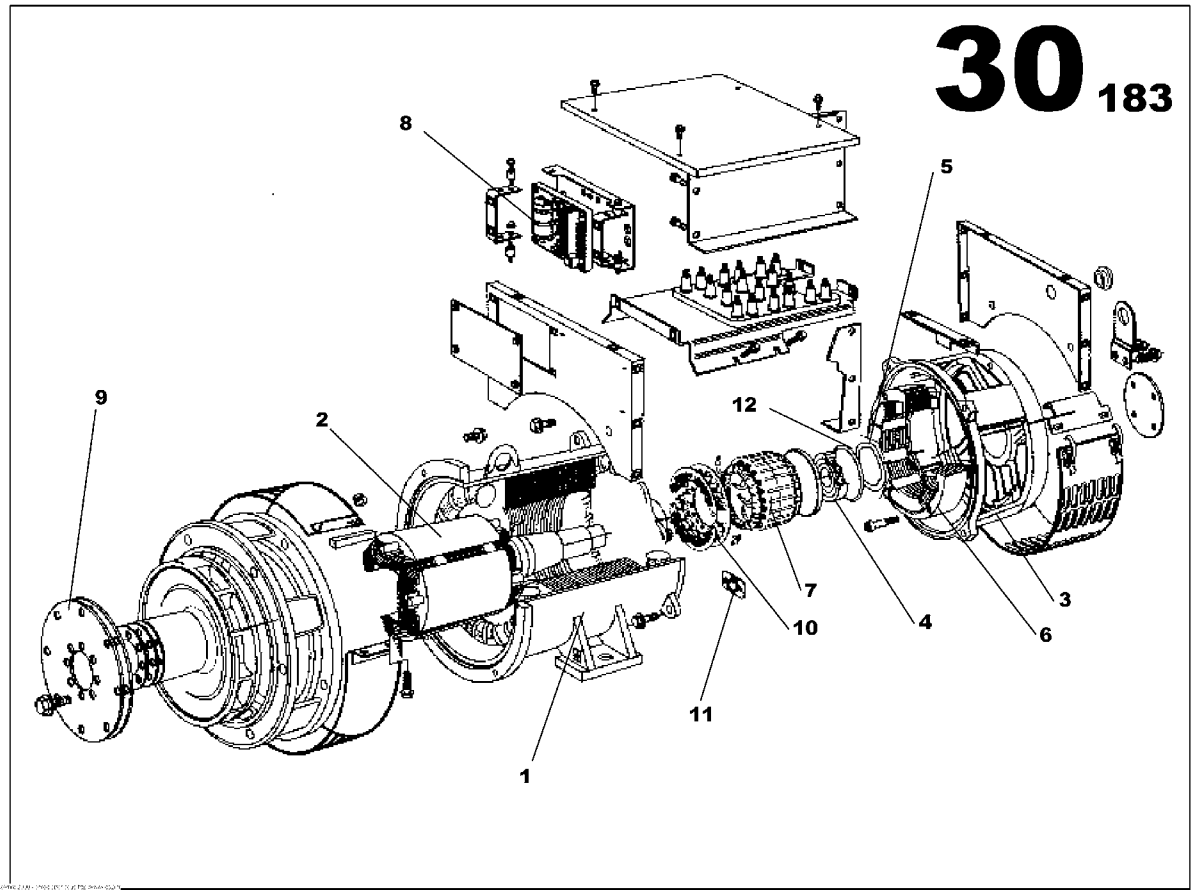

ALTERNATOR LS 462L
85428936

Part numbers listed are only parts used in this model

Item	Part No.	Description	Qty	Un	From SN	To SN	Order PN	Page
1	85508810	WOUND STATOR ASSEMBLY *Alternator S/N needed to supply this part-*	1	UN			85508810	
2	85509123	WOUND ROTOR ASSEMBLY *Alternator S/N needed to supply this part-*	1	UN			85509123	
3	85508877	N.D.E BRACKET	1	UN			85508877	
4	85425916	BALL BEARING	1	UN			85425916	
5	85509065	WAVY WASHER	1	UN			85509065	
6	85508927	WOUND EXCITER FIELD	1	UN			85508927	
7	85508968	WOUND EXCITER ARMATURE	1	UN			85508968	
8	85425577	GOVERNOR	1	UN			85425577	
9	85425940	COUPLING DISC LSA 462	1	UN			85425940	
10	85426179	DIODE BRIDGE	1	UN			85426179	
11	85402444	SURGE SUPPRESSOR	1	UN			85402444	
12	85509016	O RING	1	UN			85509016	

EXPLOSIVE ATHMOSPHERE OPTION

EXPLOSIVE ATHMOSPHERE OPTION

Part numbers listed are only parts used in this model

Item	Part No.	Description	Qty	Un	From SN	To SN	Order PN	Page
1	85425072	AIR SHUT OFF VALVE VO TAD740 ASSEMBLY	1	UN			85425072	243
2	85503357	AIR FILTER HEAVY DUTY ASSEMBLY	1	UN			85503357	245
3	17132796	INTELLISYS 021 WIRING LOOM ASSEMBLY JD 6081	1	UN			17132796	247

AIR SHUT OFF VALVE VO TAD740 ASSEMBLY

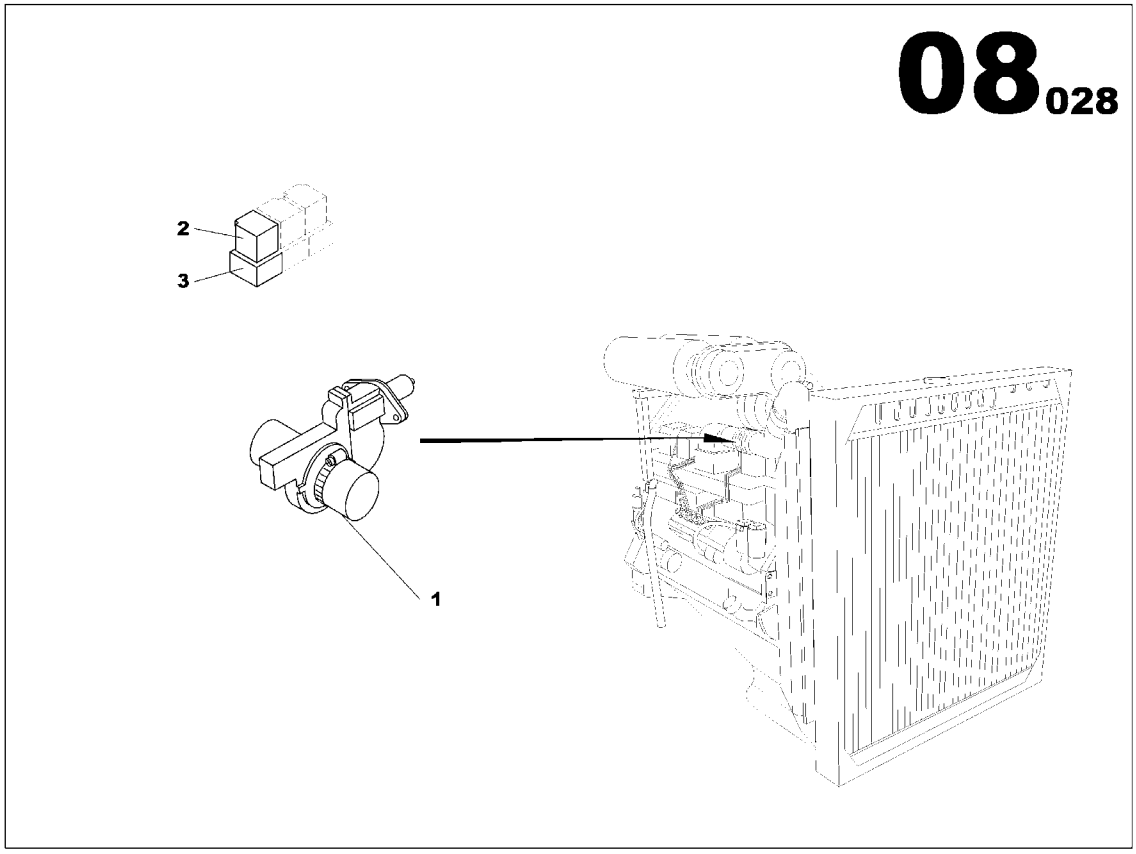

AIR SHUT OFF VALVE VO TAD740 ASSEMBLY
85425072

Part numbers listed are only parts used in this model

Item	Part No.	Description	Qty	Un	From SN	To SN	Order PN	Page
1	17137787	AIR SHUT OFF VALVE D76	1	UN			17137787	
2	85423366	RELAY 24V 10/20A	1	UN			85423366	
3	85408912	AUTOMOBILE RELAY BASE	1	UN			85408912	

AIR FILTER HEAVY DUTY ASSEMBLY

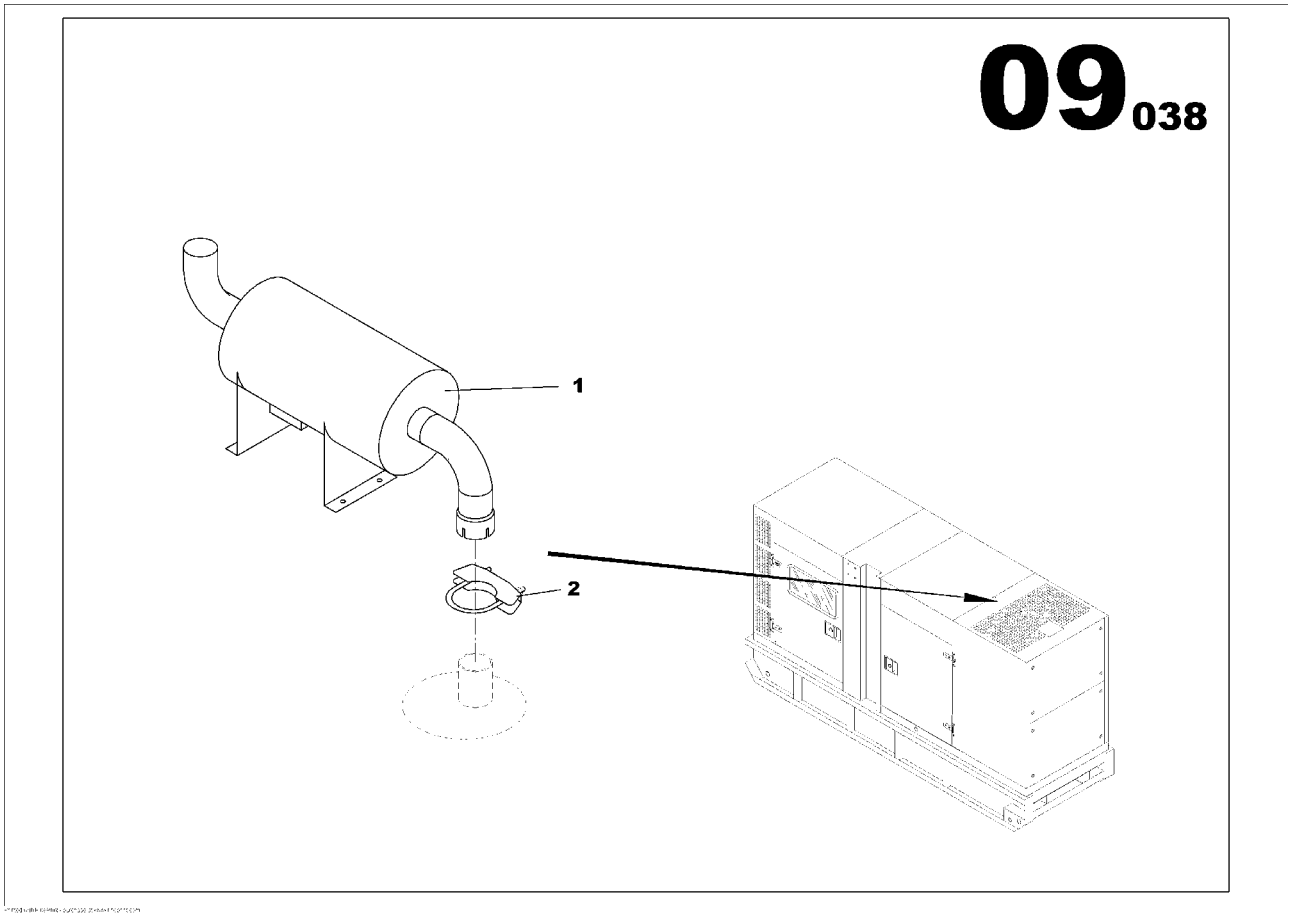

AIR FILTER HEAVY DUTY ASSEMBLY
85503357

Part numbers listed are only parts used in this model

Item	Part No.	Description	Qty	Un	From SN	To SN	Order PN	Page
1	85503340	INERIS SPARK ARRESTER DN125	1	UN			85503340	
2	85417780	HOSE CLAMP D140	1	UN			85417780	

INTELLISYS 021 WIRING LOOM ASSEMBLY JD 6081

INTELLISYS 021 WIRING LOOM ASSEMBLY JD 6081
17132796

Part numbers listed are only parts used in this model

Item	Part No.	Description	Qty	Un	From SN	To SN	Order PN	Page
1	17132804	INTELLISYS WIRING LOOM 021 EXTENSION	1	UN			17132804	

Index

Part number	Order number	Page
85422020	85422020	6
85416600	85416600	52
85428936	85428936	238
85419901	85419901	58
85421113	85421113	60
17137027	17137027	56
17137076	17137076	98
17137126	17137126	216
17137134	17137134	218
85423291	85423291	222
85421287	85421287	222
85430023	85430023	220
85629475	85629475	220
17137167	17137167	220
17137175	17137175	112
85422616	85422616	10
85421154	85421154	10
85424034	85424034	10
85509768	85509768	6
85403509	85403509	80
85424174	85424174	236
85403517	85403517	76
85629541	85629541	74
85421451	85421451	68
17137209	17137209	68
17137217	17137217	66
17137225	17137225	74
85633386	85633386	104
85633386	85633386	100
17137290	17137290	74

Part number	Order number	Page
17137316	17137316	236
17130196	17130196	74
17137340	17137340	72
17137357	17137357	66
17137407	17137407	234
17137415	17137415	232
17137514	17137514	20
17137522	17137522	18
85637437	85637437	22
17137571	17137571	22
85403707	85403707	88
85403723	85403723	88
85403731	85403731	88
85633436	85633436	88
17137597	17137597	88
17137639	17137639	88
17137654	17137654	86
17137662	17137662	84
85403848	85403848	14
85403863	85403863	14
85403921	85403921	14
85419547	85419547	6
85423887	85423887	14
85424257	85424257	14
85425072	85425072	242
17137787	17137787	244
85427953	85427953	6
85427052	85427052	90
85503340	85503340	246
85503357	85503357	242

Part number	Order number	Page
85629830	85629830	92
85629848	85629848	124
85629855	85629855	92
17137803	17137803	90
17137977	17137977	92
17137985	17137985	92
85404572	85404572	80
85404580	85404580	74
85417459	85417459	82
85427391	85427391	6
17131673	17131673	74
85423960	85423960	98
85417392	85417392	98
17138025	17138025	98
17138058	17138058	96
17138066	17138066	94
17138074	17138074	110
17138082	17138082	108
85401875	85401875	98
85420255	85420255	60
85422947	85422947	64
85422954	85422954	64
85422962	85422962	64
85422970	85422970	64
85424125	85424125	64
85424133	85424133	64
85424141	85424141	64
17138330	17138330	98
17138348	17138348	98
85497386	85497386	124

Index

Part number	Order number	Page
17138439	17138439	98
17138462	17138462	124
17138470	17138470	124
17138488	17138488	124
17138496	17138496	124
17138504	17138504	124
17138512	17138512	124
17138520	17138520	124
17138678	17138678	124
17138702	17138702	124
17138710	17138710	124
17138728	17138728	124
17138736	17138736	128
17138744	17138744	128
17138751	17138751	122
17138769	17138769	108
17138801	17138801	124
17138850	17138850	138
17138918	17138918	124
17138926	17138926	124
17138934	17138934	124
17138942	17138942	124
17138959	17138959	124
17138967	17138967	116
17138975	17138975	116
17138983	17138983	112
17139205	17139205	124
17139213	17139213	124
17139221	17139221	124
17139239	17139239	124

Part number	Order number	Page
85630366	85630366	124
17139304	17139304	124
17139312	17139312	124
17139361	17139361	124
17139379	17139379	124
17139429	17139429	130
17139437	17139437	108
17139445	17139445	128
17139452	17139452	130
85406130	85406130	140
85406155	85406155	124
85406189	85406189	124
85630515	85630515	146
85509305	85509305	124
17139544	17139544	140
17139551	17139551	140
17139569	17139569	140
85417186	85417186	124
85406213	85406213	124
85492460	85492460	124
85509263	85509263	100
85509263	85509263	104
85621142	85621142	124
17139577	17139577	124
17139601	17139601	126
17139619	17139619	126
17139643	17139643	126
85630580	85630580	88
85417277	85417277	88
85417202	85417202	88

Part number	Order number	Page
85406460	85406460	118
17135690	17135690	166
17139676	17139676	188
17132192	17132192	198
17132192	17132192	188
85416915	85416915	198
85634517	85634517	166
85634517	85634517	160
85638294	85638294	160
85638310	85638310	168
85638310	85638310	160
85638310	85638310	170
85634582	85634582	170
85634582	85634582	168
85634582	85634582	160
85638328	85638328	160
85634616	85634616	108
85638336	85638336	158
17132200	17132200	136
85638377	85638377	24
85638385	85638385	24
17132218	17132218	98
17139684	17139684	192
17132317	17132317	82
17132325	17132325	82
85638476	85638476	166
85638476	85638476	160
85638492	85638492	160
85638492	85638492	166
17132416	17132416	198

Index

Part number	Order number	Page
85638534	85638534	46
17139809	17139809	112
17132424	17132424	134
17139817	17139817	182
17139858	17139858	190
17139882	17139882	190
17139908	17139908	180
85638583	85638583	44
85638591	85638591	42
17139965	17139965	190
17139973	17139973	98
17139981	17139981	140
17140047	17140047	190
17140054	17140054	188
17140062	17140062	180
17140096	17140096	192
17132457	17132457	198
17140146	17140146	192
17140153	17140153	192
17140161	17140161	190
17140179	17140179	140
17140187	17140187	138
17140195	17140195	134
17132648	17132648	180
85638690	85638690	36
85635217	85635217	38
85407906	85407906	108
85407922	85407922	112
85638708	85638708	30
85421352	85421352	34

Part number	Order number	Page
85418242	85418242	32
85423697	85423697	34
85408078	85408078	34
85635308	85635308	178
17132796	17132796	242
17132804	17132804	248
85410942	85410942	176
85499416	85499416	18
17132812	17132812	212
85635316	85635316	230
17132820	17132820	228
85408227	85408227	132
85504017	85504017	170
85504017	85504017	168
17135708	17135708	170
17135708	17135708	168
85630663	85630663	226
85503993	85503993	152
85630721	85630721	226
85636959	85636959	156
85504033	85504033	146
85635399	85635399	216
17132846	17132846	174
85635415	85635415	174
85499499	85499499	182
85638849	85638849	198
17132879	17132879	198
17140328	17140328	182
85638971	85638971	32
85635704	85635704	36

Part number	Order number	Page
85635712	85635712	32
17140369	17140369	182
17140377	17140377	182
17140393	17140393	182
17140401	17140401	182
17140450	17140450	22
17130485	17130485	30
17130501	17130501	30
17140500	17140500	30
17140526	17140526	30
85408334	85408334	132
85408391	85408391	160
85623833	85623833	34
17133018	17133018	198
85417905	85417905	198
85408573	85408573	212
85408581	85408581	228
85408599	85408599	166
85504223	85504223	152
85408615	85408615	166
85408664	85408664	30
85408706	85408706	28
85412542	85412542	28
85415388	85415388	30
85408854	85408854	166
85423366	85423366	34
85423366	85423366	28
85423366	85423366	244
85413292	85413292	34
85408912	85408912	34

Index

Part number	Order number	Page
85408912	85408912	28
85408912	85408912	244
85423374	85423374	34
85412989	85412989	28
85412997	85412997	28
85427268	85427268	38
85427276	85427276	38
85427029	85427029	40
85639037	85639037	198
85426112	85426112	150
85426112	85426112	148
85639045	85639045	28
85426138	85426138	150
85426138	85426138	148
85426146	85426146	150
85426146	85426146	148
85499754	85499754	182
85499754	85499754	46
85426120	85426120	150
85426120	85426120	148
85639052	85639052	30
85639060	85639060	28
85623809	85623809	226
85635886	85635886	198
85635894	85635894	160
85635902	85635902	166
85635902	85635902	160
85505154	85505154	150
85505154	85505154	148
85626828	85626828	172

Part number	Order number	Page
17133067	17133067	210
17135716	17135716	168
17133687	17133687	170
85631422	85631422	170
85631422	85631422	168
17133075	17133075	216
17133083	17133083	180
17133109	17133109	200
17133117	17133117	198
17135039	17135039	198
17133125	17133125	198
85636991	85636991	146
85627198	85636991	146
17133133	17133133	198
85411569	85411569	144
85636140	85636140	154
17133166	17133166	144
85636173	85636173	216
17140724	17140724	216
17133174	17133174	144
17140732	17140732	216
17140740	17140740	144
85636256	85636256	216
17140757	17140757	144
17135724	17135724	164
85639292	85639292	162
17140765	17140765	158
17140781	17140781	144
85423119	85423119	12
85421204	85421204	222

Part number	Order number	Page
85409068	85409068	80
85409076	85409076	80
85409084	85409084	198
85409126	85409126	198
85409175	85409175	140
85424893	85424893	12
85409191	85409191	132
85639318	85639318	184
85639318	85639318	48
85429744	85429744	192
85429744	85429744	222
85430247	85430247	222
85429553	85429553	202
85429553	85429553	186
85429553	85429553	50
85429959	85429959	236
85507911	85507911	208
85507911	85507911	206
85507911	85507911	204
85507911	85507911	196
85507911	85507911	184
85507911	85507911	200
85507911	85507911	48
85507911	85507911	210
85509743	85509743	196
85430585	85430585	26
17133240	17133240	192
85430163	85430163	222
85409225	85409225	140
85409233	85409233	140

Index

Part number	Order number	Page
85409241	85409241	140
85636363	85636363	202
85636363	85636363	186
85636363	85636363	50
85636371	85636371	196
17130766	17130766	166
85636389	85636389	208
85636389	85636389	50
85636389	85636389	204
85636389	85636389	200
85636389	85636389	194
85636389	85636389	192
85636389	85636389	186
85636389	85636389	166
85636389	85636389	26
85636389	85636389	210
85631547	85631547	26
85636454	85636454	198
85639383	85639383	46
85639383	85639383	182
17140880	17140880	190
17140898	17140898	190
17140906	17140906	220
85639417	85639417	46
85639417	85639417	182
85639425	85639425	24
17133257	17133257	192
17133265	17133265	198
17133273	17133273	198
17133281	17133281	198

Part number	Order number	Page
17133299	17133299	198
85509222	85509222	76
85415701	85415701	62
85430254	85430254	222
85409258	85409258	62
85622967	85622967	12
85622967	85622967	10
17140955	17140955	114
85430619	85430619	236
85622660	85622660	236
85507937	85507937	68
85507945	85507945	68
85430627	85430627	236
85430635	85430635	236
85409308	85409308	62
85423093	85423093	10
85423051	85423051	222
85423044	85423044	10
17140971	17140971	114
85423283	85423283	236
85623007	85623007	236
85417780	85417780	92
85417780	85417780	246
85501872	85501872	16
85409423	85409423	12
85409423	85409423	10
85409423	85409423	58
85409423	85409423	222
85417764	85417764	92
17130816	17130816	78

Part number	Order number	Page
85504207	85504207	156
85504207	85504207	152
17130824	17130824	78
85509727	85509727	236
85509727	85509727	74
85509727	85509727	68
85410298	85410298	62
85425551	85425551	70
85421758	85421758	12
85421733	85421733	12
85421766	85421766	222
17133349	17133349	120
17133349	17133349	120
17140997	17140997	112
85416451	85416451	62
85424885	85424885	12
85417632	85417632	74
85631802	85631802	236
85416436	85416436	78
85430643	85430643	74
85430643	85430643	236
85409597	85409597	58
85424844	85424844	222
85629392	85629392	12
85629392	85629392	10
85506467	85506467	104
85506467	85506467	100
85428076	85428076	98
85428076	85428076	94
85500213	85500213	106

Index

Part number	Order number	Page
85500213	85500213	102
85503852	85503852	104
85503852	85503852	100
85623684	85623684	106
85623684	85623684	102
85631927	85631927	104
85631927	85631927	100
17135732	17135732	168
85639565	85639565	158
22207054	22207054	104
22207054	22207054	100
17135740	17135740	170
85639573	85639573	142
85639599	85639599	134
85639680	85639680	204
85636660	85636660	192
85636660	85636660	166
85636660	85636660	160
85632016	85632016	126
85402170	85402170	8
85402147	85402147	8
85401990	85401990	8
85620813	85620813	8
85402196	85402196	8
85401628	85401628	8
85401610	85401610	8
85425502	85425502	8
85502771	85502771	8
85401404	85401404	8
85425825	85425825	8

Part number	Order number	Page
85426161	85426161	8
85425734	85425734	8
85425742	85425742	8
17141383	17141383	8
85502797	85502797	8
17141391	17141391	8
17141409	17141409	8
85425577	85425577	54
85425577	85425577	240
85402444	85402444	240
85402444	85402444	54
85426179	85426179	240
85426179	85426179	54
85425940	85425940	240
85425940	85425940	54
85508810	85508810	240
85508810	85508810	54
85508877	85508877	240
85508877	85508877	54
85508927	85508927	240
85508927	85508927	54
85508968	85508968	240
85508968	85508968	54
85509016	85509016	240
85509016	85509016	54
85509065	85509065	240
85509065	85509065	54
85509123	85509123	240
85509123	85509123	54
85401909	85401909	8

Part number	Order number	Page
85401917	85401917	8
85400786	85400786	16
85400737	85400737	16
85501229	85501229	16
85501294	85501294	16
85401644	85401644	70
85503019	85503019	70
85503001	85503001	70
85502995	85502995	70
85502987	85502987	70
85502979	85502979	70
85502961	85502961	70
85502953	85502953	70
85502946	85502946	70
85502599	85502599	70
85502581	85502581	70
85502557	85502557	70
85402519	85402519	166
85504090	85504090	162
85504264	85504264	156
85504199	85504199	170
85504199	85504199	168
85504215	85504215	156
85504215	85504215	152
17135476	17135476	166
17135484	17135484	166
85639821	85639821	166
85639839	85639839	164
85425916	85425916	240
85425916	85425916	54

Index

Part number	Order number	Page
85636694	85636694	160
17130006	17130006	28
85632198	85632198	130
85632206	85632206	236
17131160	17131160	26
85410140	85410140	192
85636728	85636728	202
85636728	85636728	186
85636728	85636728	50
85429967	85429967	26
85429967	85429967	236
85636736	85636736	208
85636736	85636736	206
85636736	85636736	204
85636736	85636736	184
85636736	85636736	210
85636736	85636736	48
85429793	85429793	200
85429793	85429793	196
85636751	85636751	196
85430213	85430213	192
85430270	85430270	222
85429728	85429728	26
85632222	85632222	130

Part number	Order number	Page	Part number	Order number	Page