INGERSOLL-RAND

G 33

PARTS MANUAL

17131194

Doosan purchased Bobcat Company from Ingersoll-Rand Company in 2007. Any reference to Ingersoll-Rand Company or use of trademarks, service marks, logos, or other proprietary identifying marks belonging to Ingersoll-Rand Company in this manual is historical or nominative in nature, and is not meant to suggest a current affiliation between Ingersoll-Rand Company and Doosan Company or the products of either.

G 33 EDITION:02/04/2004

33519016301

Revised (01-13)

AFTERMARKET - 50 Hertz Generators

For more information on how to order parts or information regarding your local distributor (Europe, Middle East, Africa) please contact:

Facility Details **Coordonnées du Site** **Unternehmensdetails** **Dirección**	Ingersoll-Rand European Sales Ltd Portable Power Paragon Business Park Chorley New Road, Horwich Bolton BL6 6JN United Kingdom
Telephone **Téléphone** **Telefon** **Teléfono**	+44 (0) 1204 690 690
Fax	+44 (0) 1204 690 366
Emergency order phone **Numéro d'urgence pour commandes** **Dringende Aufträge, Telefon** **Teléfono de pedidos de urgencia**	+44 (0) 777 6170921
Office hours **Heures d'ouverture** **Bürostunden** **Horas de oficina**	Mon-Fri 8:00am to 4:30pm (GMT)

Telephone contact directory
Numéros des contacts
Telefonkontaktverzeichnis
Teléfonos de contacto

Harry Dale Aftermarket Marketing Manager	+44 (0) 1204 690 541
Malcolm Stott Marketing Analyst	+44 (0) 1204 690 396
Ian Parr Parts Co-ordinator	+44 (0) 1204 690 465
Howard Connolly Parts Co-ordinator	+44 (0) 1204 690 641
Martin James Parts Co-ordinator MEA	+44 (0) 1204 690 329

Imprimé avec FinePrint 2000 - enregistrer sous http://www.gs2.fr

G033

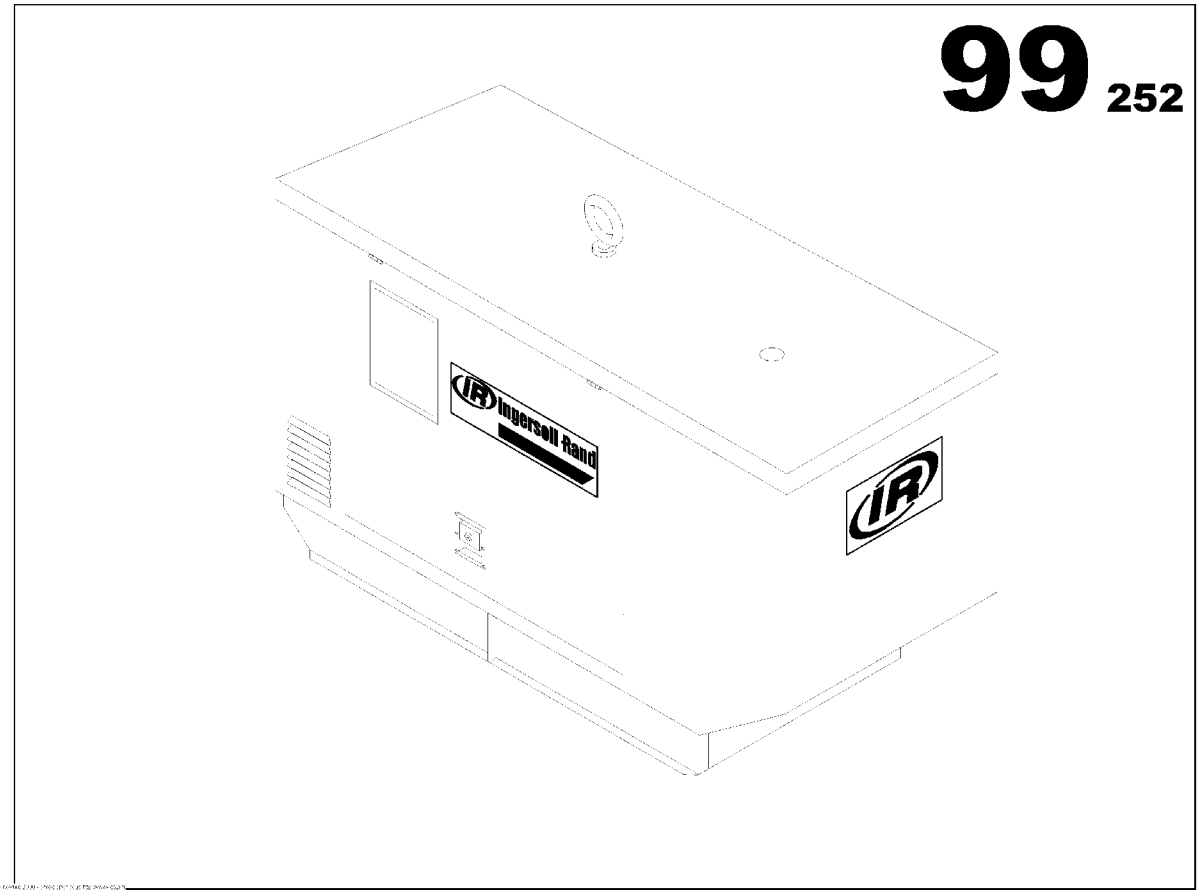

G033

Part numbers listed are only parts used in this model

Item	Part No.	Description	Qty	Un	From SN	To SN	Order PN	Page
1		G033 *-Basic Version*	1	U N				3
2		BASE INTELISYS OPTION	1	UN				159
3		AUTO START OPTION	1	UN				187
4		ENGINE ELECTRONIC REGULATION OPTION	1	UN				235
5		ADJUSTABLE EARTH FAULT PROTECTION WITH INTELISYS	1	UN				249
6		ADJUSTABLE EARTH FAULT PROTECTION WITH INTELISYS	1	UN				259
7		3 WAY FUEL VALVES OPTION	1	UN				301
8		REINFORCED INSULATION OPTION	1	UN				307
9		DUAL FREQUENCY OPTION	1	UN				309

G033

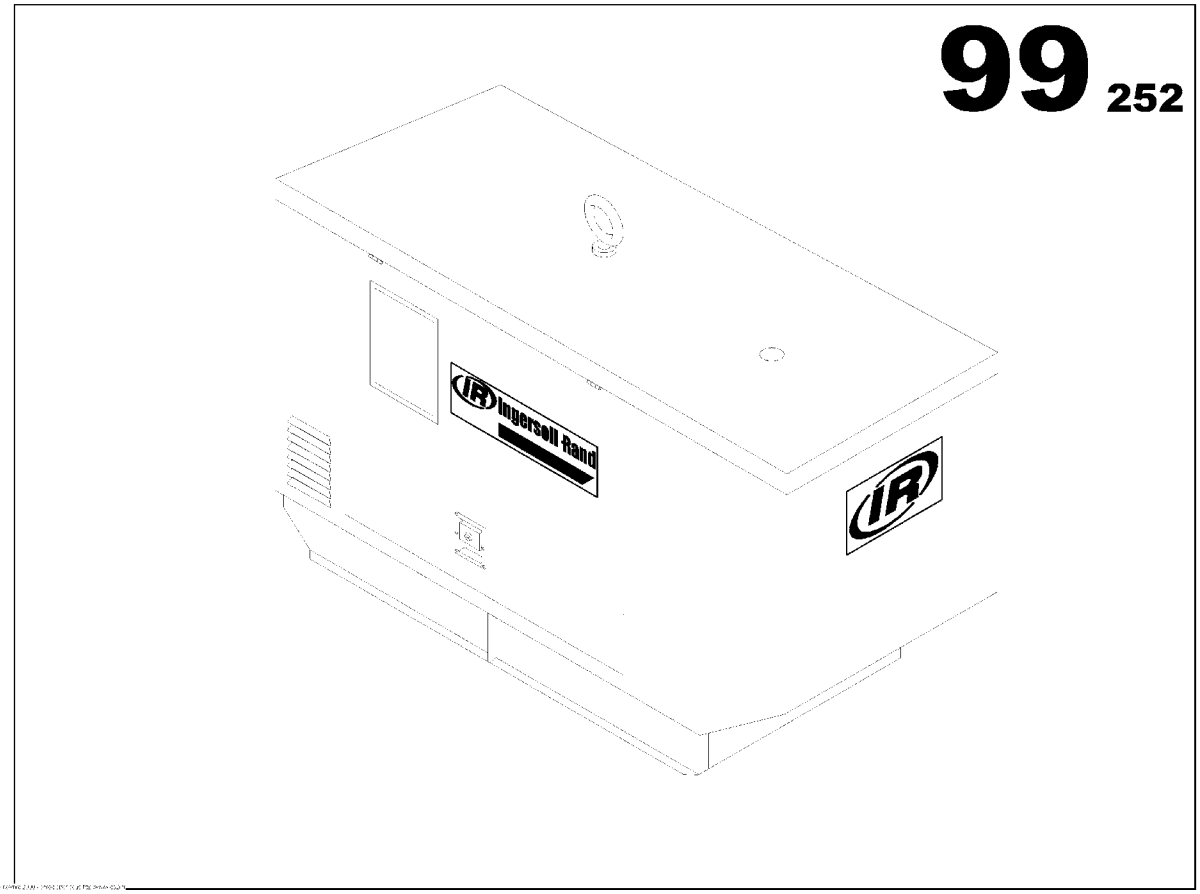

G033

Part numbers listed are only parts used in this model

Item	Part No.	Description	Qty	Un	From SN	To SN	Order PN	Page
1		ENGINE FUNCTION	1	UN				5
2		ALTERNATOR FUNCTION	1	UN				25
3		COOLER FUNCTION	1	UN				33
4		FUEL FUNCTION	1	UN				41
5		STARTING FUNCTION	1	UN				61
6		EXHAUST FUNCTION	1	UN				67
7		FRAME FUNCTION	1	UN				77
8		CANOPY FONCTION	1	UN				87
9		ELECTRICAL FUNCTION	1	UN				111
10		POWER CONNECTION BLOCK FUNCTION	1	UN				143
11		DOCUMENTATION OPTION	1	UN				157

ENGINE FUNCTION

Non illustré
Not illustrated

ENGINE FUNCTION

Part numbers listed are only parts used in this model

Item	Part No.	Description	Qty	Un	From SN	To SN	Order PN	Page
1	85633105	ENGINE JD 3029DF SAE 3/11.5	1	UN			85633105	7
2	85633550	AIR FILTER HEAVY DUTY ASSEMBLY	1	UN			85633550	9
3	85404275	AIR HEATER ASSEMBLY	1	UN			85404275	13
5	85636504	SUMP DRAIN PUMP ASSEMBLY	1	UN			85636504	17
6		ENGINE WIRING FUNCTION	1	UN				21

ENGINE JD 3029DF SAE 3/11.5

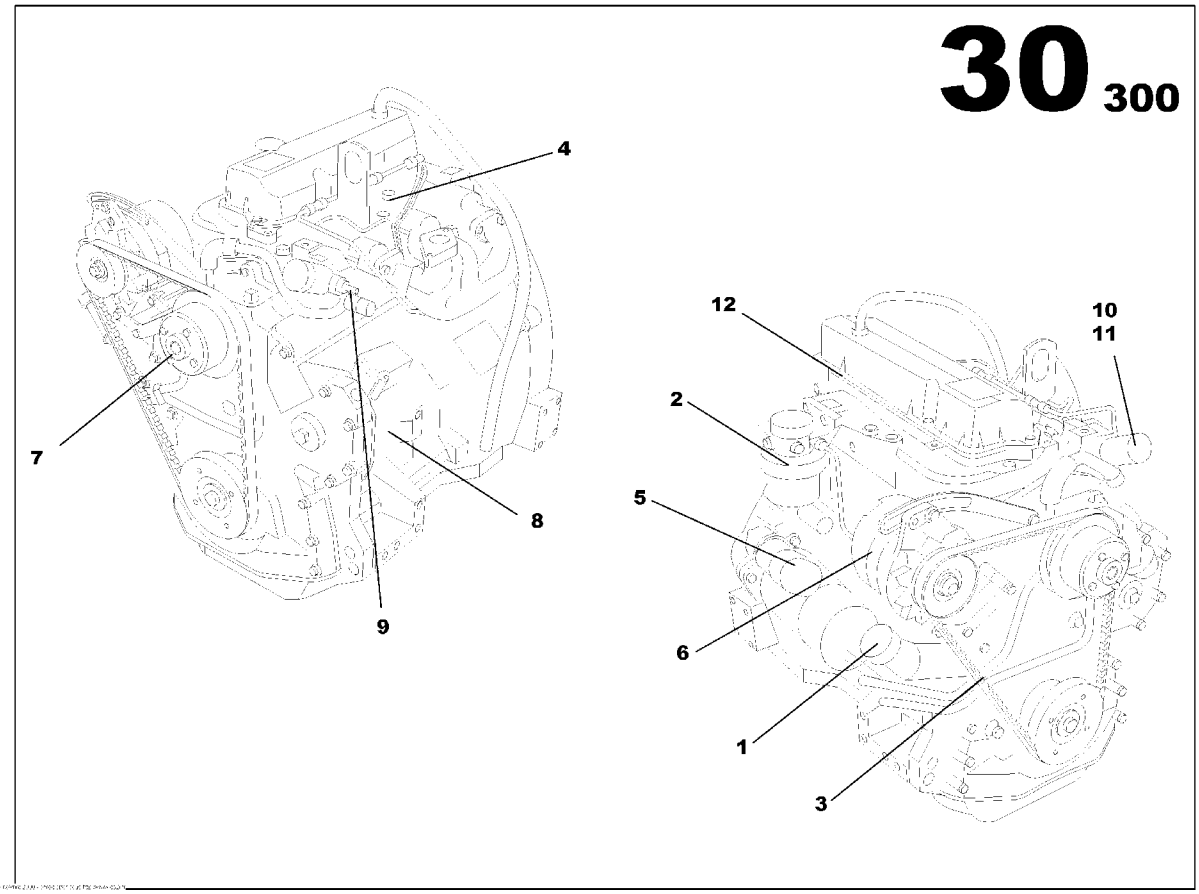

ENGINE JD 3029DF SAE 3/11.5
85633105

Part numbers listed are only parts used in this model

Item	Part No.	Description	Qty	Un	From SN	To SN	Order PN	Page
1	35308030	OIL FILTER	1	UN			35308030	
2	85400976	FUEL FILTER	1	UN			85400976	
3	85621357	BELT	1	UN			85621357	
4	85400885	INJECTION NOZZLE	3	UN			85400885	
5	85628030	STARTER	1	UN			85628030	
6	85621365	CHARGING ALTERNATOR	1	UN			85621365	
7	85621381	WATER PUMP	1	UN			85621381	
8	85401099	PRESSURE SWITCH	1	UN			85401099	
9	85401172	TEMPERATURE SWITCH	1	UN			85401172	
10	85621373	THERMOSTAT SEAL	1	UN			85621373	
11	85401180	THERMOSTAT	1	UN			85401180	
12	85402717	ROCKER COVER GASKET	1	UN			85402717	

AIR FILTER HEAVY DUTY ASSEMBLY

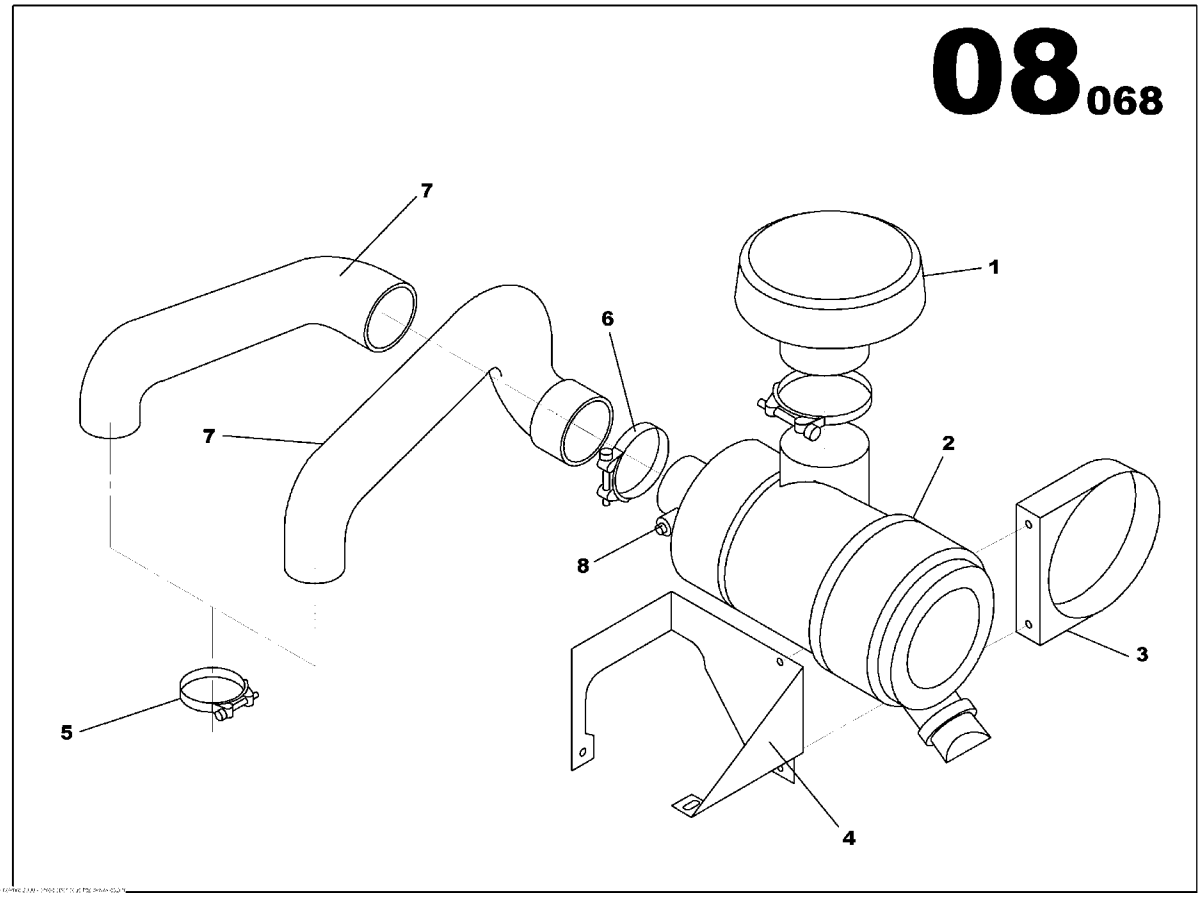

AIR FILTER HEAVY DUTY ASSEMBLY
85633550

Part numbers listed are only parts used in this model

Item	Part No.	Description	Qty	Un	From SN	To SN	Order PN	Page
1	85412815	RAIN CAP	1	UN			85412815	
2	85413441	AIR FILTER HEAVY DUTY	1	UN			85413441	11
3	85412898	CLAMP D102	1	UN			85412898	
4	85620920	AIR FILTER BRACKET JD 3029	1	UN			85620920	
5	85409407	HOSE CLIP D70/90	2	UN			85409407	
6	85409472	T BOLT CLAMP D86/91	2	UN			85409472	
7	85636538	RUBBER HOSE D63	1	UN	03002056		85636538	
8	85410108	AIR RESTRICTION INDICATOR	1	UN			85410108	

AIR FILTER HEAVY DUTY

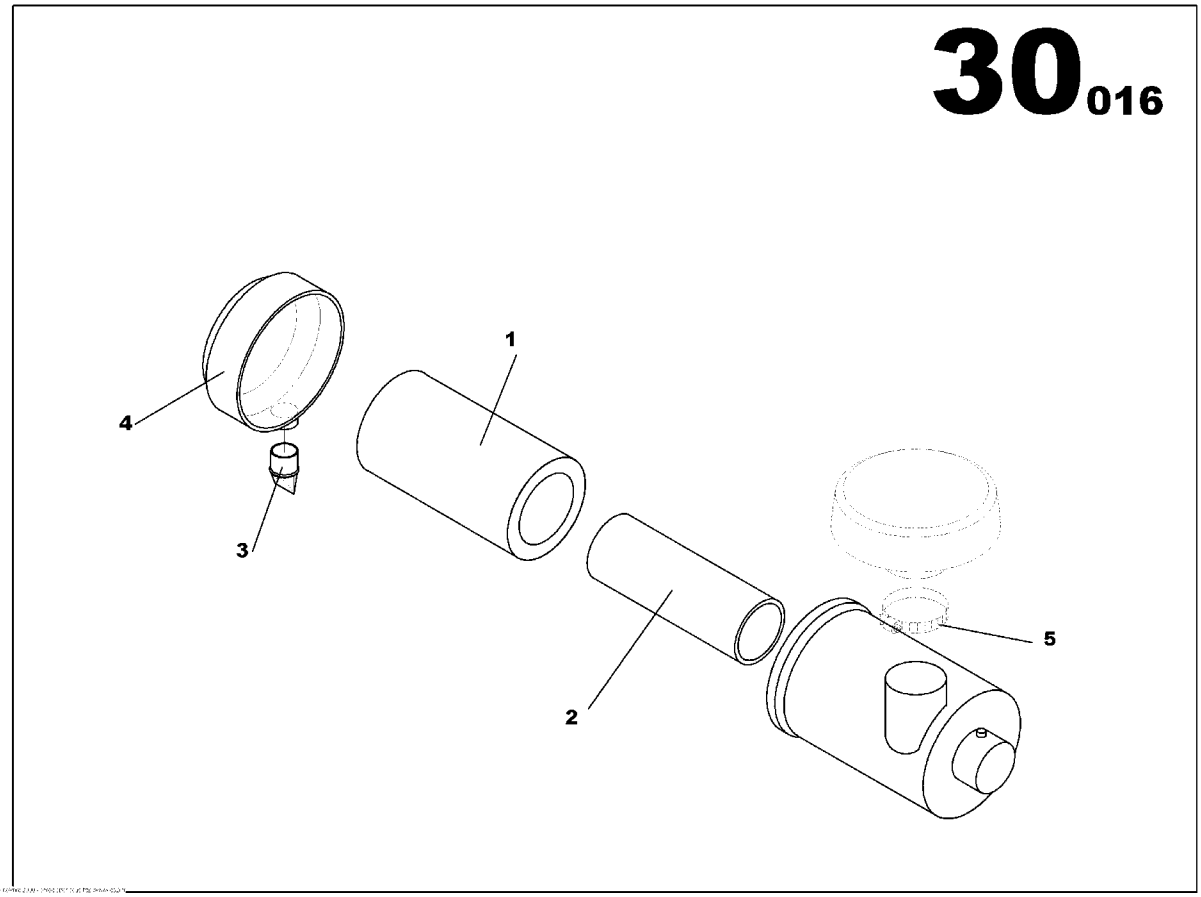

AIR FILTER HEAVY DUTY
85413441

Part numbers listed are only parts used in this model

Item	Part No.	Description	Qty	Un	From SN	To SN	Order PN	Page
1	85400679	AIR FILTER ELEMENT	1	UN			85400679	
2	85400703	AIR FILTER ELEMENT	1	UN			85400703	
3	85501252	VACUATOR VALVE	1	UN			85501252	
4	85501336	DUST CUP	1	UN			85501336	
5	85409399	HOSE CLIP D60/80	1	UN			85409399	

AIR HEATER ASSEMBLY

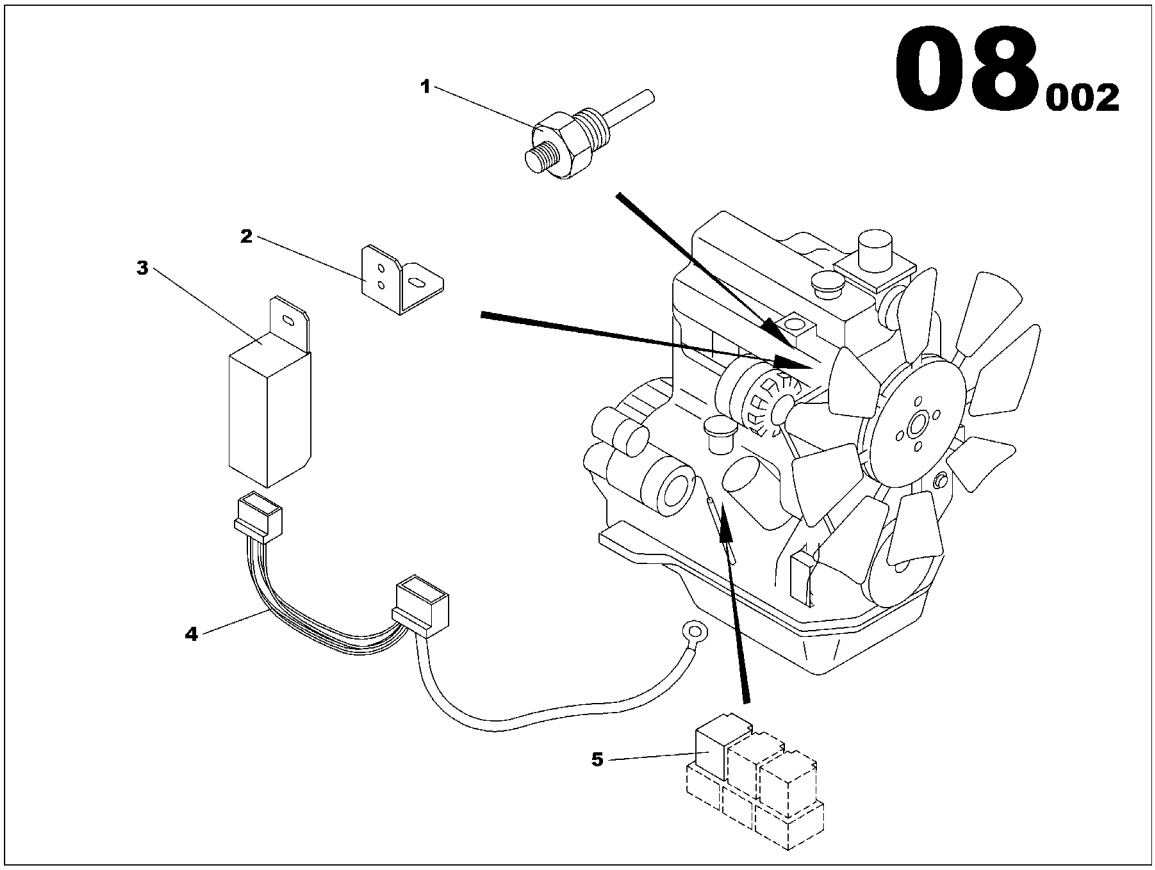

AIR HEATER ASSEMBLY
85404275

Part numbers listed are only parts used in this model

Item	Part No.	Description	Qty	Un	From SN	To SN	Order PN	Page
1	85404259	AIR HEATER RESISTANCE 700W 12V	1	UN			85404259	
2	85407252	PREHEATER RELAY BRACKET	1	UN			85407252	
3	85407260	STARTING RELAY PROTECTION PANEL	1	UN			85407260	
4	85408185	ENGINE AIR PRE HEATING WIRING LOOM JD3029/4039	1	UN			85408185	15
5	85408896	RELAY 12V 20/30A	1	UN			85408896	

ENGINE AIR PRE HEATING WIRING LOOM JD3029/4039

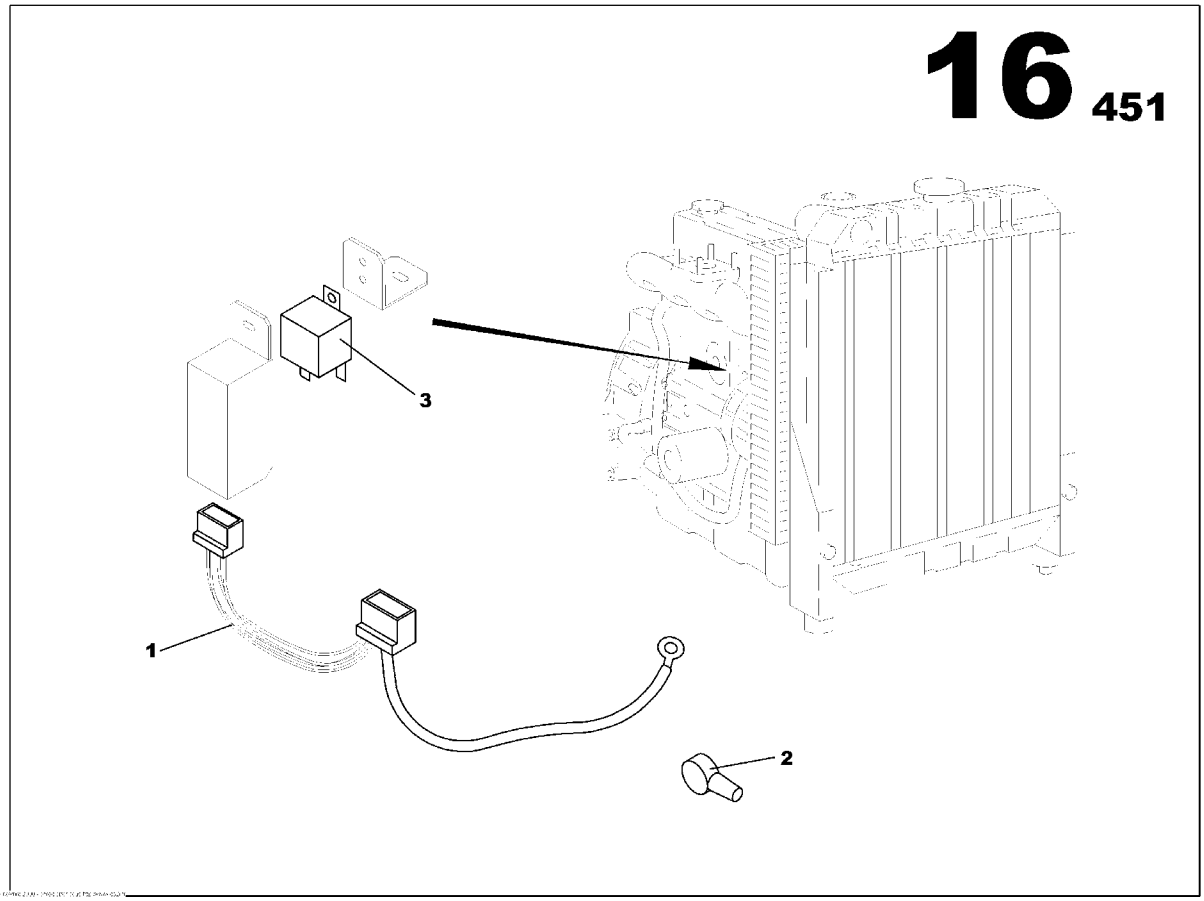

ENGINE AIR PRE HEATING WIRING LOOM JD3029/4039
85408185

Part numbers listed are only parts used in this model

Item	Part No.	Description	Qty	Un	From SN	To SN	Order PN	Page
1	85408151	AIR HEATER WIRING LOOM JD 4039	1	UN			85408151	
2	85623833	COWL	1	UN			85623833	
3	85408888	RELAY 12V 70A WITH BRAKET	1	UN			85408888	

SUMP DRAIN PUMP ASSEMBLY

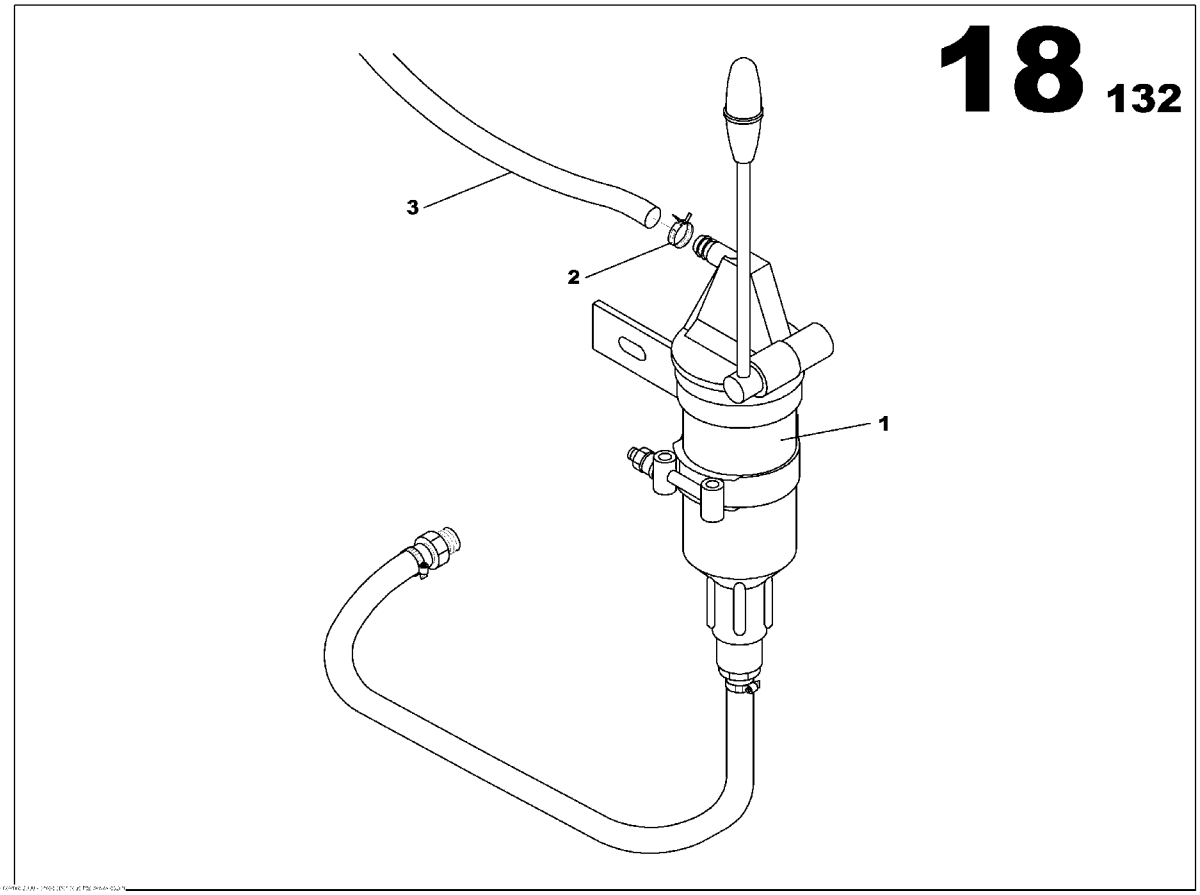

SUMP DRAIN PUMP ASSEMBLY
85636504

Part numbers listed are only parts used in this model

Item	Part No.	Description	Qty	Un	From SN	To SN	Order PN	Page
1	85633204	OIL SUMP DRAIN PUMP ASSEMBLY	1	UN			85633204	19
2	85409514	SPRING CLAMP D13/15	4	UN			85409514	
3	85490860	FLEXIBLE HOSE D7,5	0.65	ML			85490860	
3	85490860	FLEXIBLE HOSE D7,5	0.85	ML			85490860	

OIL SUMP DRAIN PUMP ASSEMBLY

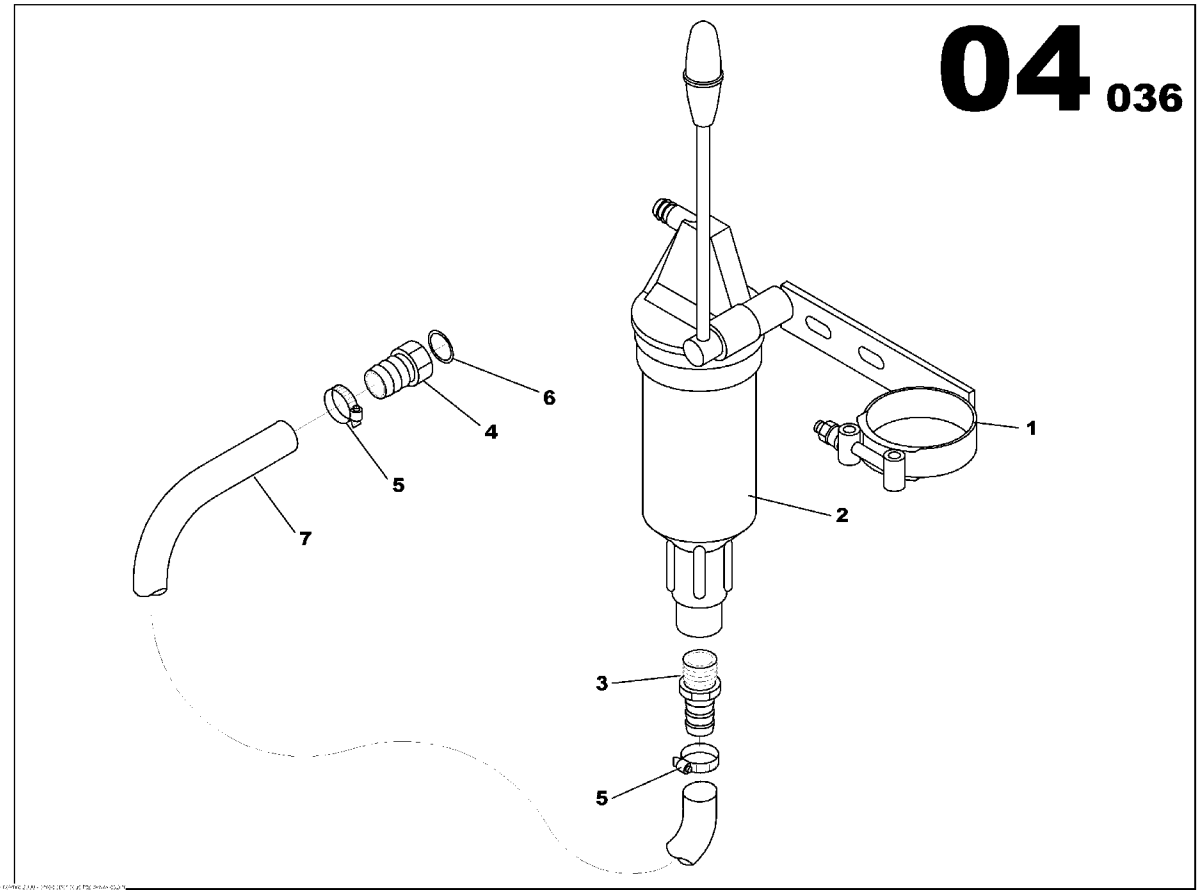

OIL SUMP DRAIN PUMP ASSEMBLY
85633204

Part numbers listed are only parts used in this model

Item	Part No.	Description	Qty	Un	From SN	To SN	Order PN	Page
1	85403426	OIL SUMP PUMP BRACKET	1	UN			85403426	
2	85403434	MANUAL PUMP	1	UN			85403434	
3	85415719	PIPE UNION REDUCER MAL/MAL 3/8G D12	1	UN			85415719	
4	85621241	PIPE UNION FEMAL/MAL 1/2G	1	UN			85621241	
5	85412914	HOSE CLIP D12/22	2	UN			85412914	
6	85410298	GASKET D14x18	1	UN			85410298	
7	85416444	FLEXIBLE HOSE D12x19	1	ML			85416444	

ENGINE WIRING FUNCTION

Non illustré
Not illustrated

ENGINE WIRING FUNCTION

Part numbers listed are only parts used in this model

Item	Part No.	Description	Qty	Un	From SN	To SN	Order PN	Page
1	85621217	ENGINE WIRING LOOM	1	UN			85621217	23

ENGINE WIRING LOOM

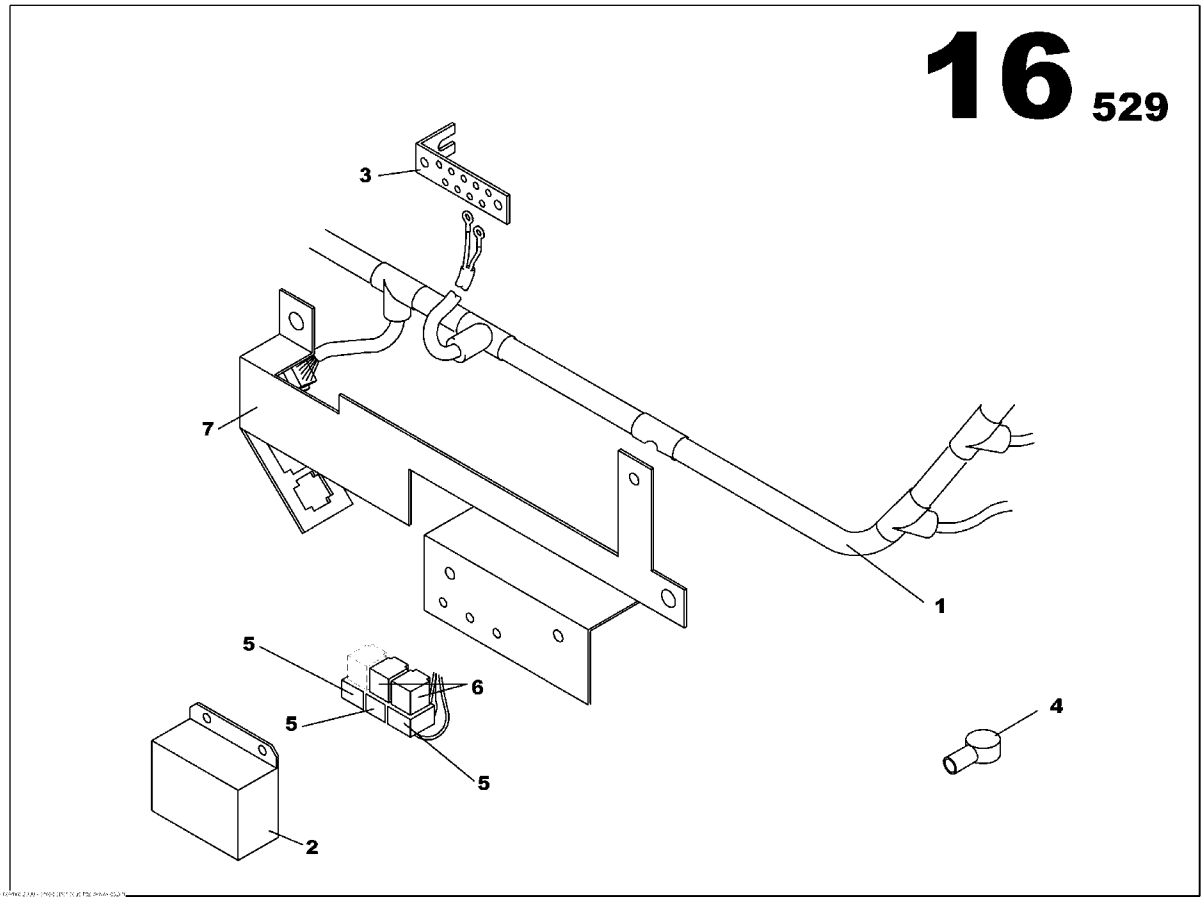

ENGINE WIRING LOOM
85621217

Part numbers listed are only parts used in this model

Item	Part No.	Description	Qty	Un	From SN	To SN	Order PN	Page
1	85621209	ENGINE WIRING LOOM JD 3029D	1	UN			85621209	
2	85407971	STARTING RELAY PROTECTION PANEL	1	UN			85407971	
3	85408078	COPPER BAR 5x25	1	UN			85408078	
4	85623833	COWL	1	UN			85623833	
5	85408912	AUTOMOBILE RELAY BASE	3	UN			85408912	
6	85408896	RELAY 12V 20/30A	2	UN			85408896	
7	85621225	WIRING BRACKET JD 3029	1	UN			85621225	

ALTERNATOR FUNCTION

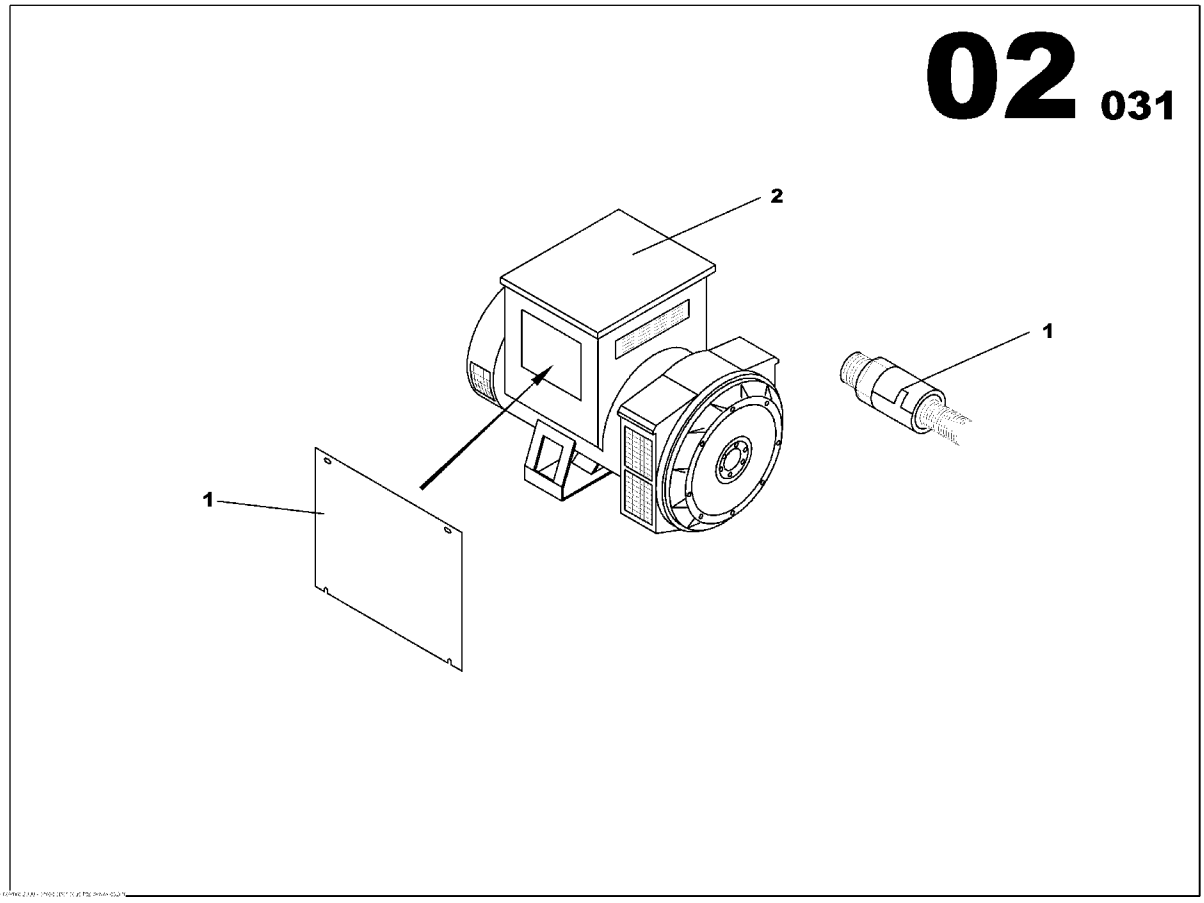

ALTERNATOR FUNCTION

Part numbers listed are only parts used in this model

Item	Part No.	Description	Qty	Un	From SN	To SN	Order PN	Page
1	85634772	OUTPUT CABLES ALTERNATOR ASSEMBLY	1	UN			85634772	27
2		ALTERNATOR	1	UN				29

OUTPUT CABLES ALTERNATOR ASSEMBLY

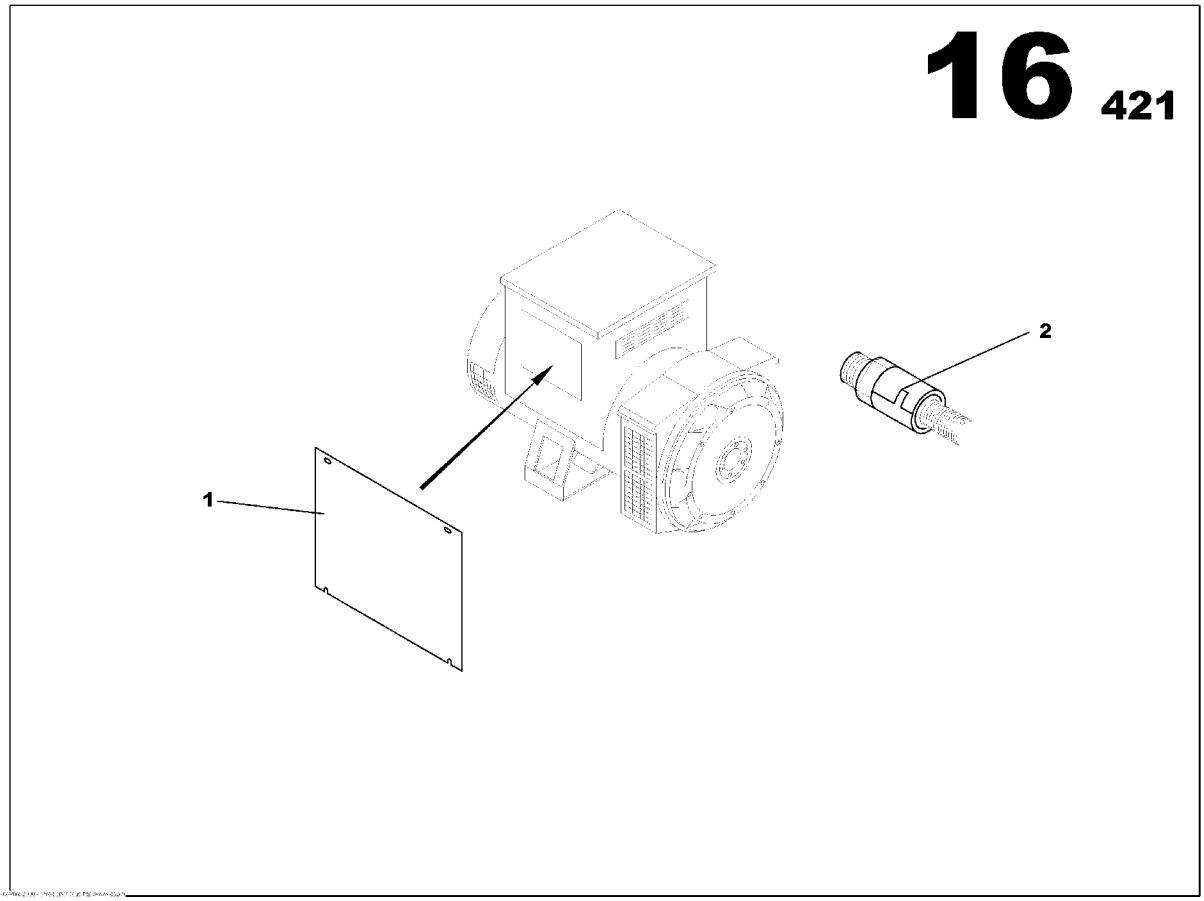

OUTPUT CABLES ALTERNATOR ASSEMBLY
85634772

Part numbers listed are only parts used in this model

Item	Part No.	Description	Qty	Un	From SN	To SN	Order PN	Page
1	85501435	CABLE OUTLET PLATE	1	UN			85501435	
2	85501575	PIPE UNION PG36	1	UN			85501575	

ALTERNATOR

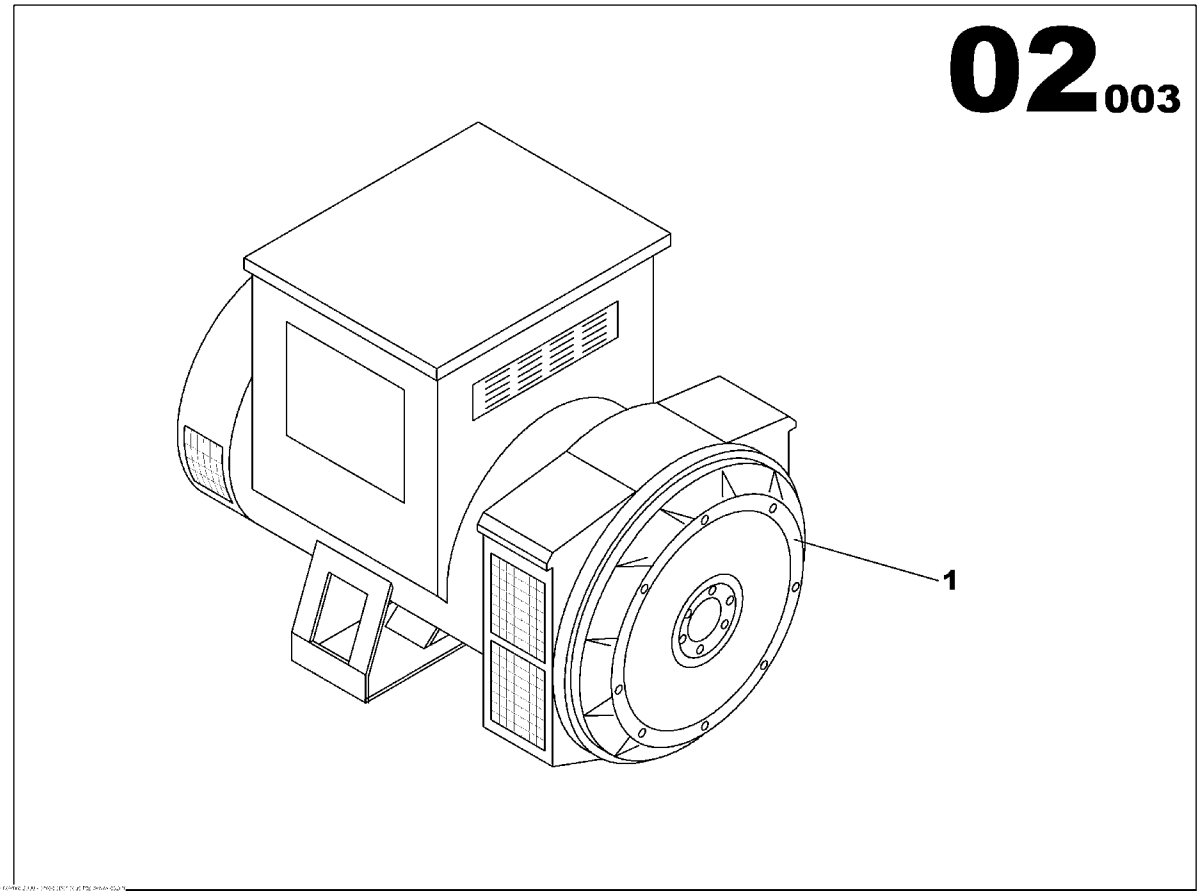

ALTERNATOR

Part numbers listed are only parts used in this model

Item	Part No.	Description	Qty	Un	From SN	To SN	Order PN	Page
1	85425841	ALTERNATOR LS 422L	1	UN			85425841	31

ALTERNATOR LS 422L

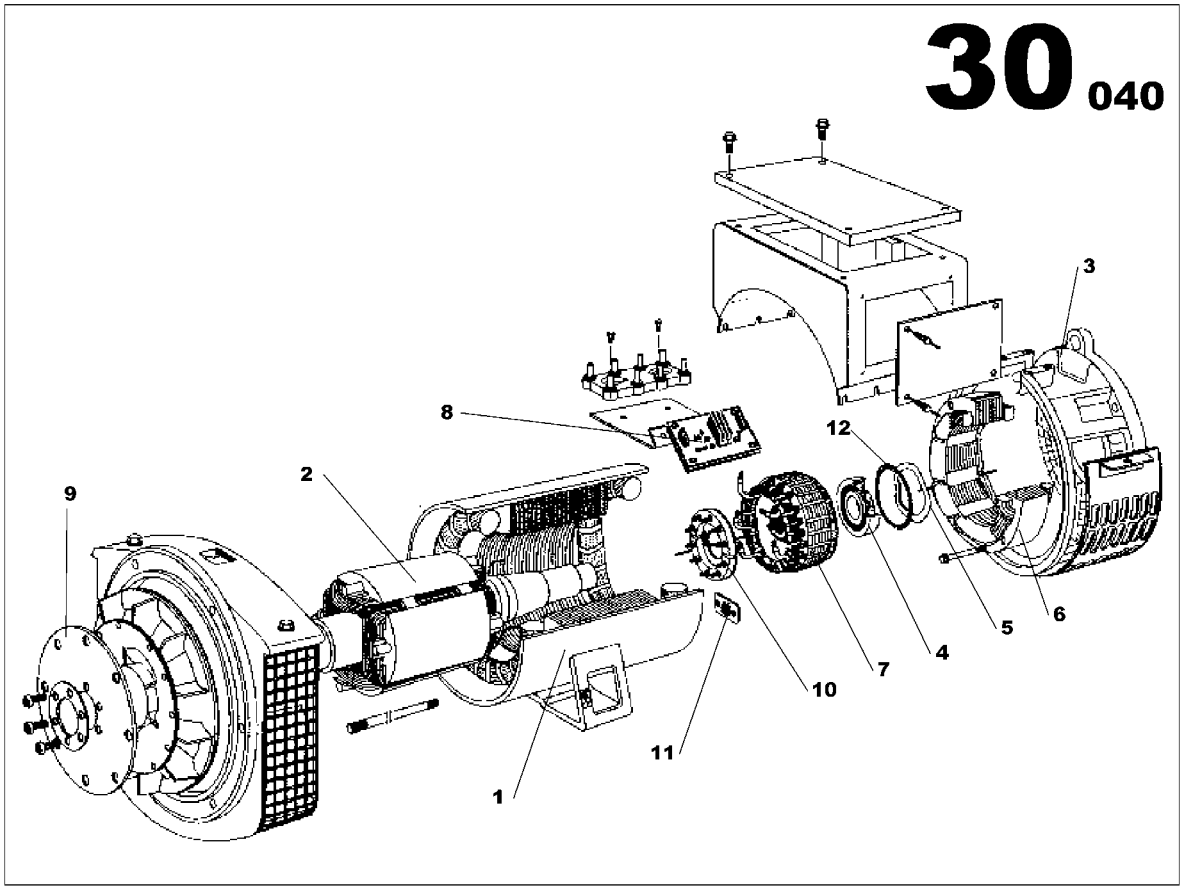

ALTERNATOR LS 422L
85425841

Part numbers listed are only parts used in this model

Item	Part No.	Description	Qty	Un	From SN	To SN	Order PN	Page
1	85508752	WOUND STATOR ASSEMBLY	1	UN			85508752	
2	85509081	WOUND ROTOR ASSEMBLY	1	UN			85509081	
3	85508851	N.D.E BRACKET	1	UN			85508851	
4	85425882	BEARING	1	UN			85425882	
5	85509032	WAVY WASHER	1	UN			85509032	
6	85508893	WOUND EXCITER FIELD	1	UN			85508893	
7	85508943	WOUND EXCITER ARMATURE	1	UN			85508943	
8	85402451	GOVERNOR	1	UN			85402451	
9	85425973	DRIVE DISC LSA 422L9	1	UN			85425973	
10	85425858	DIODE BRIDGE ASSEMBLY	1	UN			85425858	
11	85425866	SURGE SUPPRESSOR	1	UN			85425866	
12	85508992	O RING	1	UN			85508992	

COOLER FUNCTION

Non illustré
Not illustrated

COOLER FUNCTION

Part numbers listed are only parts used in this model

Item	Part No.	Description	Qty	Un	From SN	To SN	Order PN	Page
1	85621597	RADIATOR FITTINGS JD3029T ASSEMBLY	1	UN			85621597	35

RADIATOR FITTINGS JD3029T ASSEMBLY

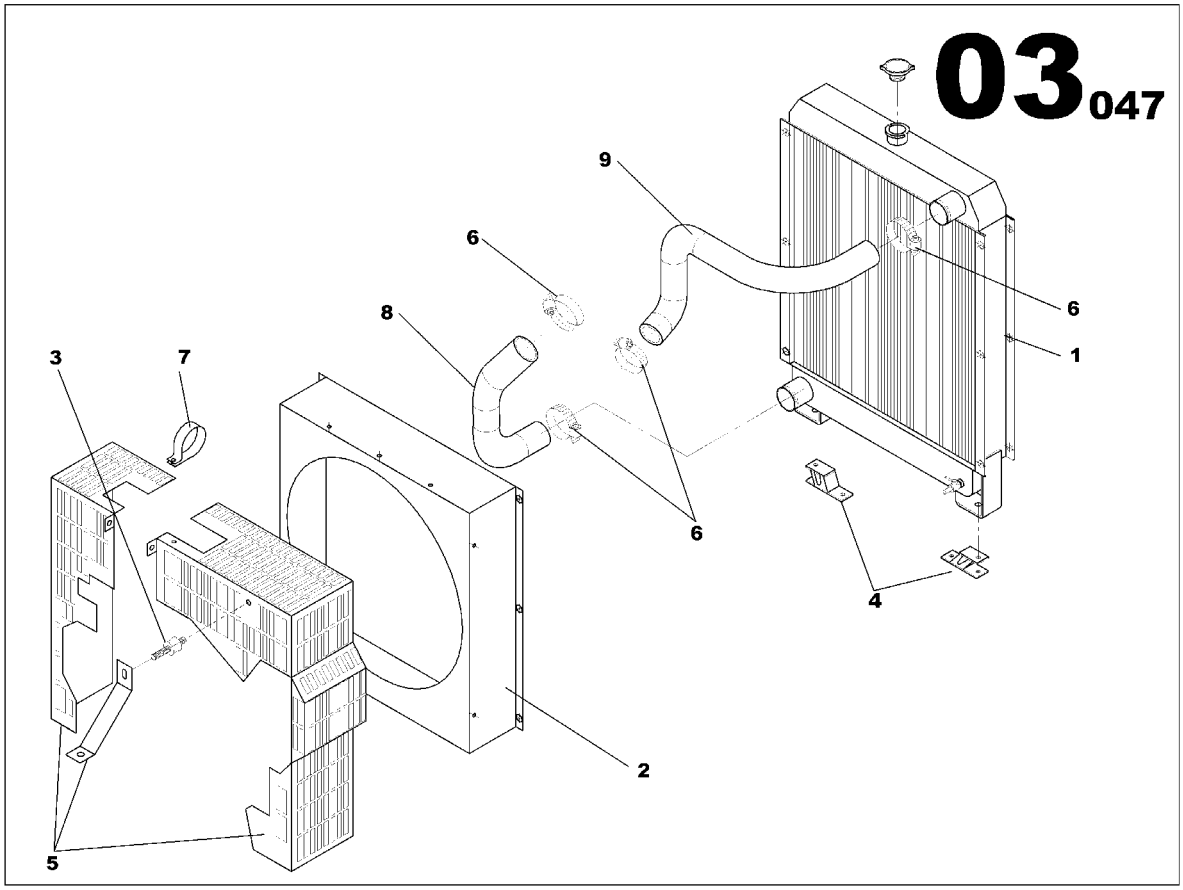

RADIATOR FITTINGS JD3029T ASSEMBLY
85621597

Part numbers listed are only parts used in this model

Item	Part No.	Description	Qty	Un	From SN	To SN	Order PN	Page
1	85620862	RADIATOR JD 3029	1	UN			85620862	37
2	85621571	PLENUM	1	UN			85621571	
3	85405017	ANTI-VIBRATION MOUNT D40 Th28	1	UN			85405017	
4	85621027	ANTI-VIBRATION MOUNT50daN 5.9mm	2	UN			85621027	
5	85634103	FAN GUARD ASSEMBLY	1	UN			85634103	39
6	85500544	HOSE CLIP D40/60	4	UN			85500544	
7	85621258	CLAMP D44	1	UN			85621258	
8	85621282	RUBBER HOSE ELBOW D48	1	UN			85621282	
9	85621290	RUBBER HOSE ELBOW D40	1	UN			85621290	

RADIATOR JD 3029

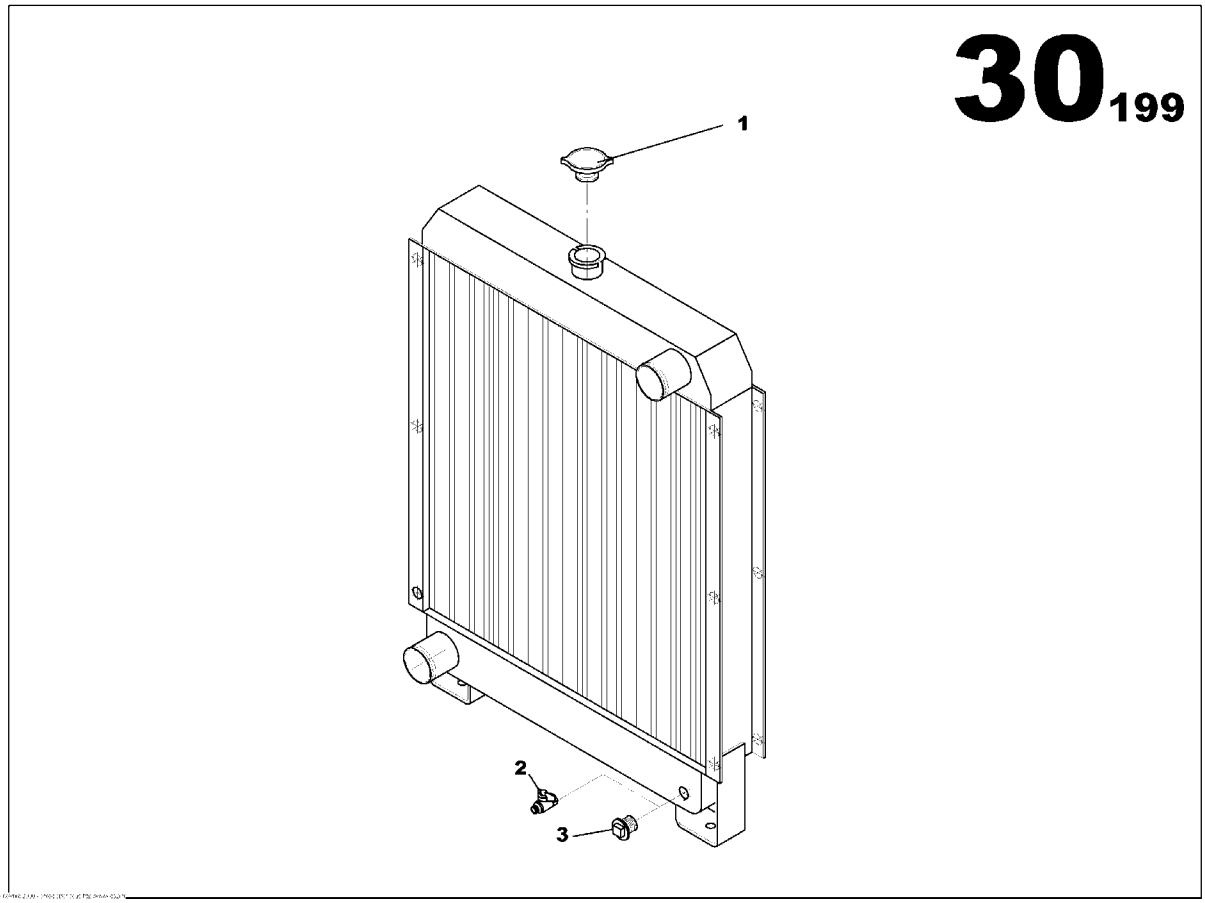

RADIATOR JD 3029
85620862

Part numbers listed are only parts used in this model

Item	Part No.	Description	Qty	Un	From SN	To SN	Order PN	Page
1	85621399	RADIATOR CAP	1	UN			85621399	
2	85639896	2 WAY VALVE	1	UN			85639896	
3	17130790	PIPE UNION REDUCER MAL/MAL 1/4G	1	UN			17130790	

FAN GUARD ASSEMBLY

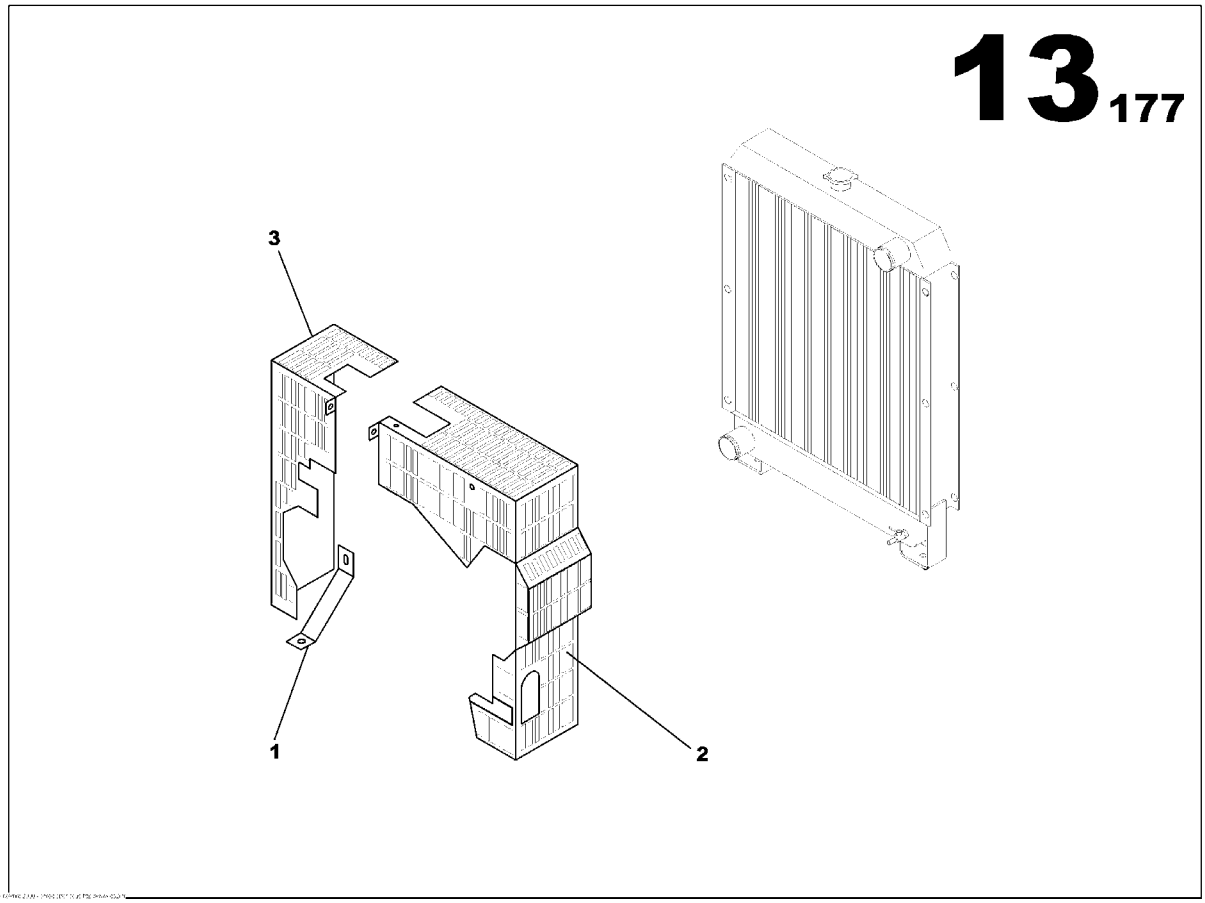

FAN GUARD ASSEMBLY
85634103

Part numbers listed are only parts used in this model

Item	Part No.	Description	Qty	Un	From SN	To SN	Order PN	Page
1	85620854	RADIATOR BRACKET ENGINE JD 3029	1	UN			85620854	
2	85634004	RADIATOR GUARD JD 3029	1	UN			85634004	
3	85621589	RADIATOR GUARD JD 3029	1	UN			85621589	

FUEL FUNCTION

Non illustré
Not illustrated

FUEL FUNCTION

Part numbers listed are only parts used in this model

Item	Part No.	Description	Qty	Un	From SN	To SN	Order PN	Page
1	85633220	FUEL PREFILTER KIT ASSEMBLY	1	UN			85633220	43
2		FUEL TANK M107 ASSEMBLY	1	UN				49

FUEL PREFILTER KIT ASSEMBLY

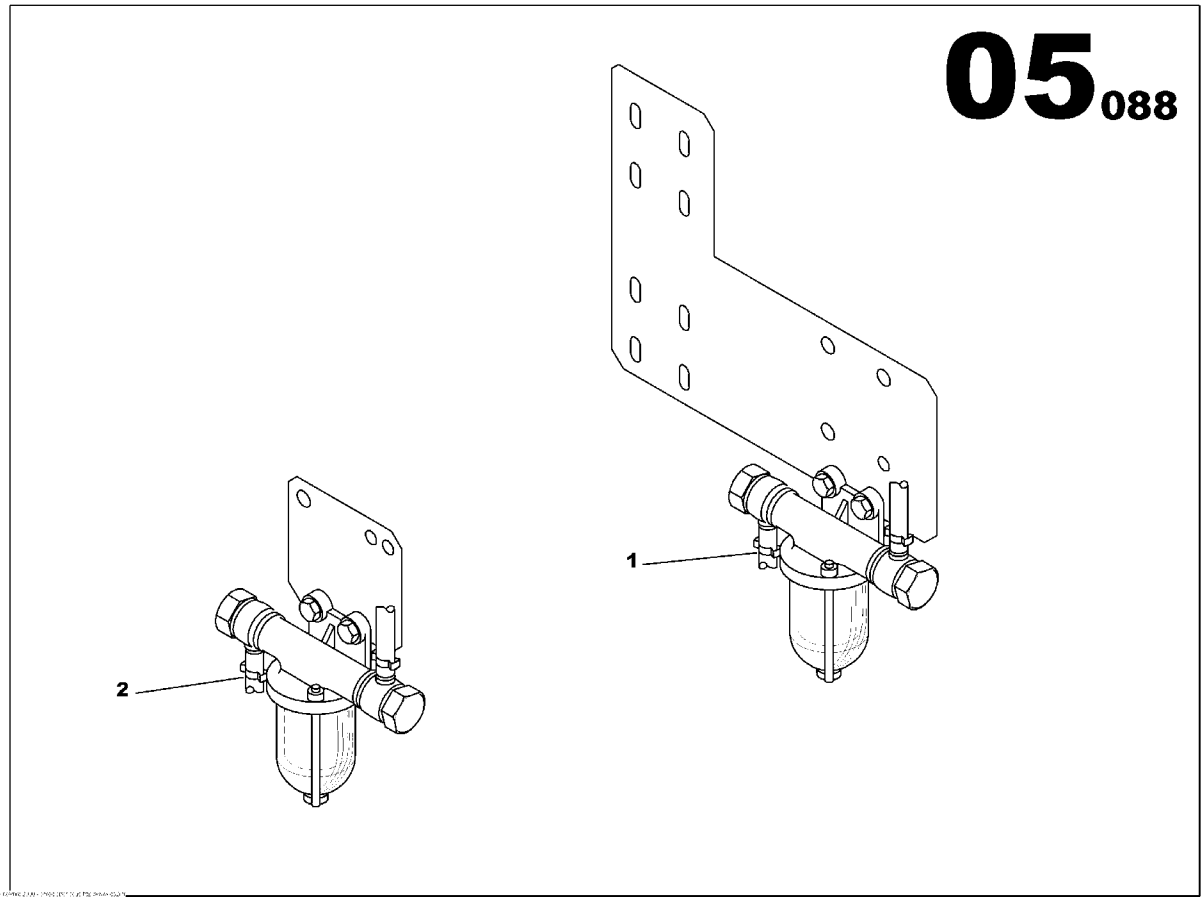

FUEL PREFILTER KIT ASSEMBLY
85633220

Part numbers listed are only parts used in this model

Item	Part No.	Description	Qty	Un	From SN	To SN	Order PN	Page
2	85633378	FUEL PREFILTER KIT ASSEMBLY	1	UN	02011031		85633378	45

FUEL PREFILTER KIT ASSEMBLY

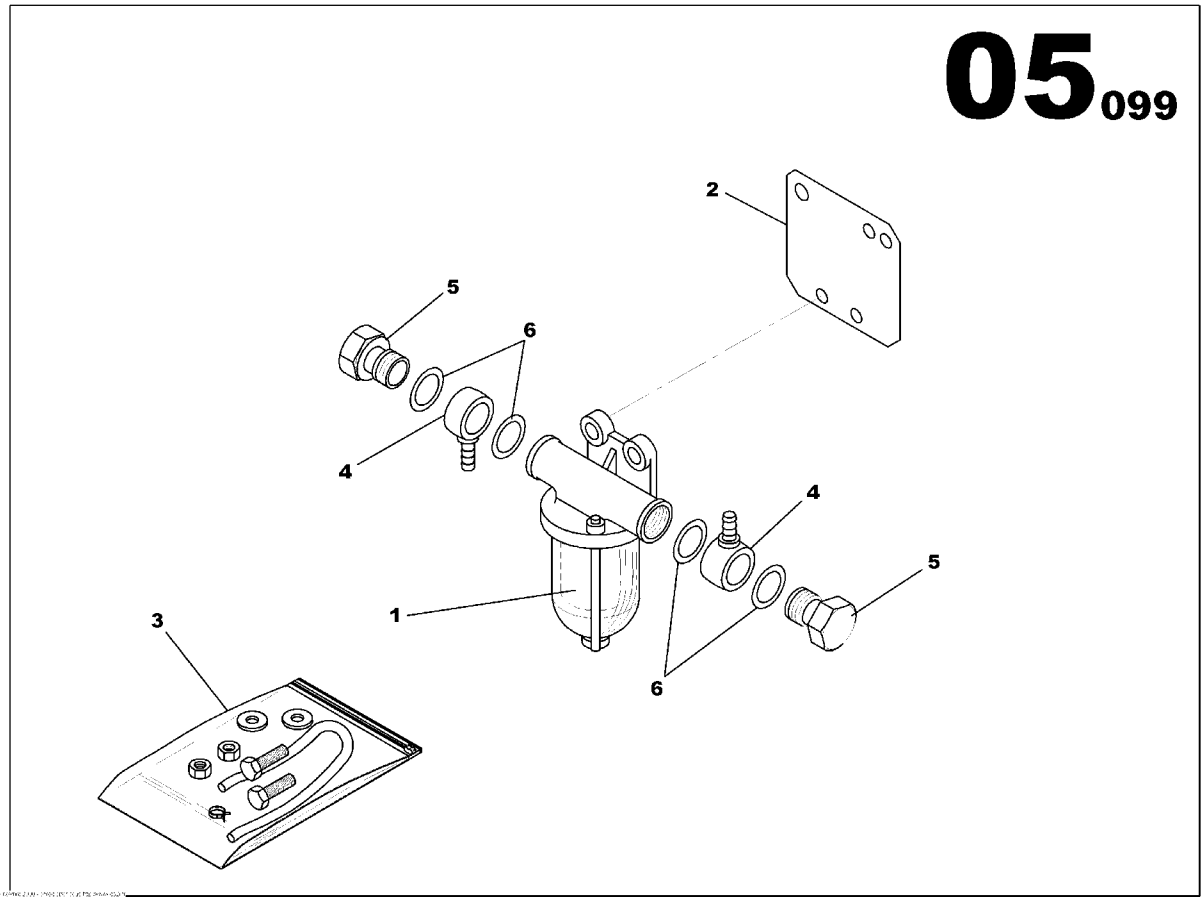

FUEL PREFILTER KIT ASSEMBLY
85633378

Part numbers listed are only parts used in this model

Item	Part No.	Description	Qty	Un	From SN	To SN	Order PN	Page
1	85403525	FUEL FILTER SEPARATOR	1	UN			85403525	
2	85633311	FUEL PREFILTER BRACKET	1	UN			85633311	
3	85636421	SCREWS ASSEMBLY	1	UN			85636421	47
4	85409274	BANJO CONNECTOR MALE D08	2	UN			85409274	
5	85409282	BANJO SCREW M14X150 L26	2	UN			85409282	
6	85409522	GASKET D14x20	4	UN			85409522	

SCREWS ASSEMBLY

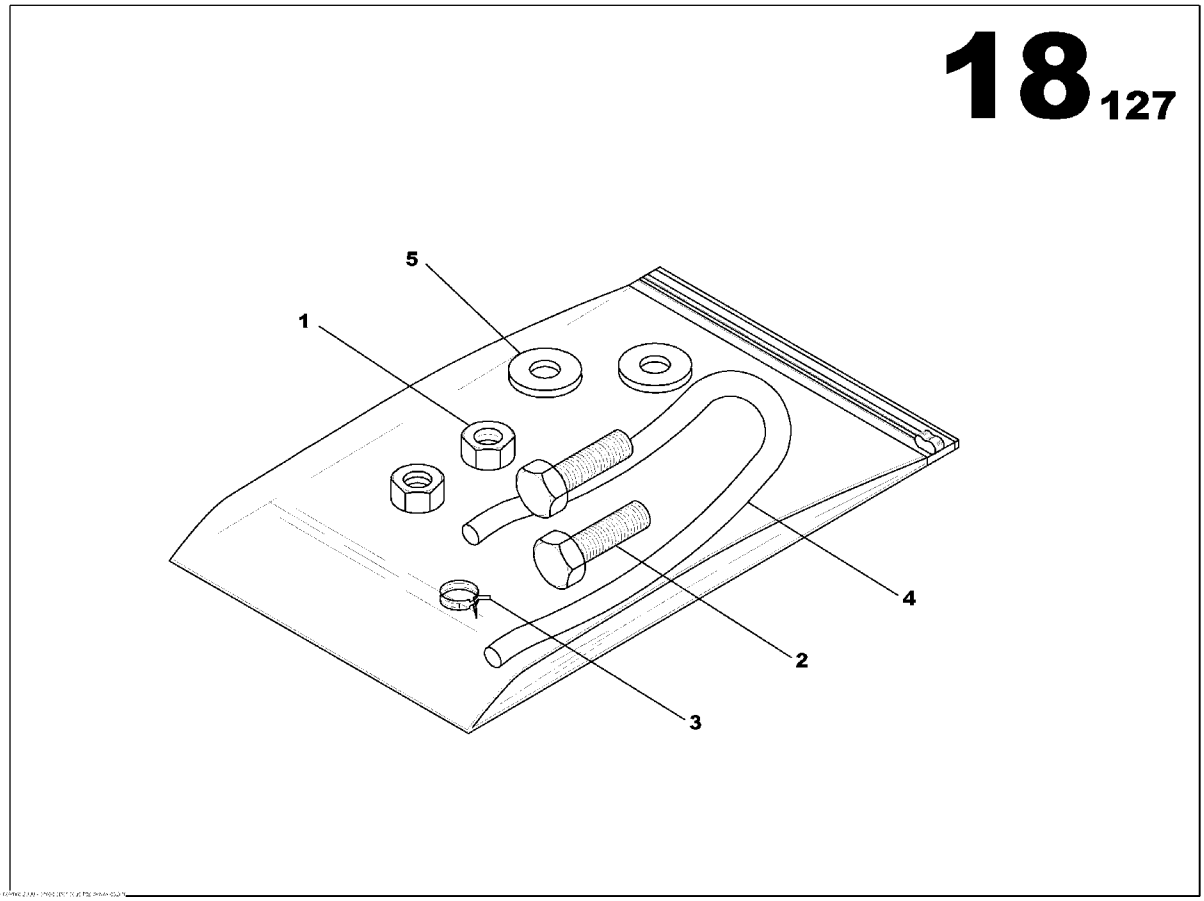

SCREWS ASSEMBLY
85636421

Part numbers listed are only parts used in this model

Item	Part No.	Description	Qty	Un	From SN	To SN	Order PN	Page
1	85507911	NUT M6	2	UN			85507911	
2	85636389	SCREW H M6x16	2	UN			85636389	
3	85621266	SPRING CLAMP D8.9/9.3	2	UN			85621266	
4	85416428	FLEXIBLE HOSE D5.5	2	ML			85416428	
5	85429793	WASHER 6x14	2	UN			85429793	

FUEL TANK M107 ASSEMBLY

Non illustré
Not illustrated

FUEL TANK M107 ASSEMBLY

Part numbers listed are only parts used in this model

Item	Part No.	Description	Qty	Un	From SN	To SN	Order PN	Page
	17130188	FUEL TANK M107 ASSEMBLY	1	UN			17130188	51

FUEL TANK M107 ASSEMBLY

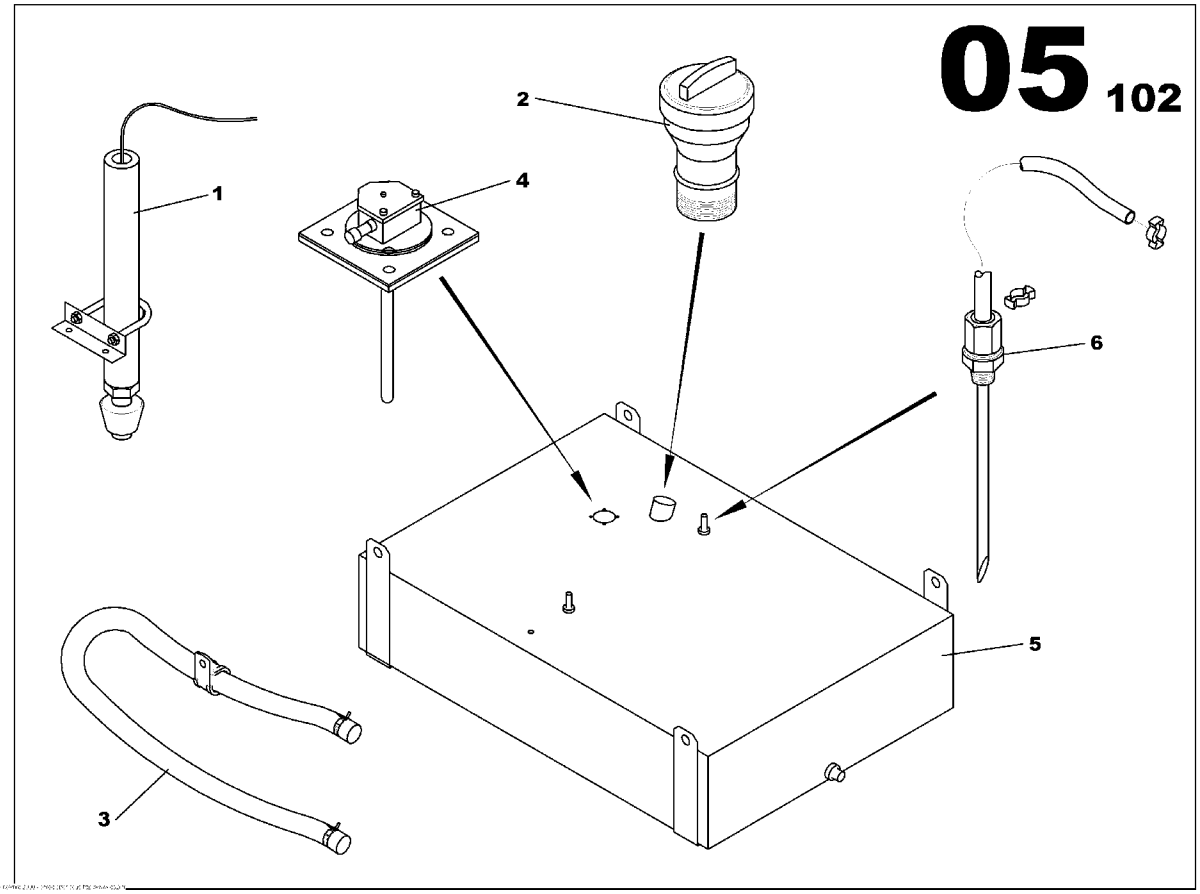

FUEL TANK M107 ASSEMBLY
17130188

Part numbers listed are only parts used in this model

Item	Part No.	Description	Qty	Un	From SN	To SN	Order PN	Page
1	17130279	LEAKAGE DETECTION RETENTION BUND ASSEMBLY	1	UN			17130279	57
2	85629541	FUEL FILLING FUNNEL BASE TANK	1	UN			85629541	53
3	17130196	COMBUSTIBLE VENT TANK ASSEMBLY	1	UN			17130196	55
4	17130287	TANK GAUGE ASSEMBLY	1	UN			17130287	59
5	17130154	TANK 230L	1	UN			17130154	
6	17130121	FUEL SUCCION PIPE L320 D8	2	UN			17130121	

FUEL FILLING FUNNEL BASE TANK

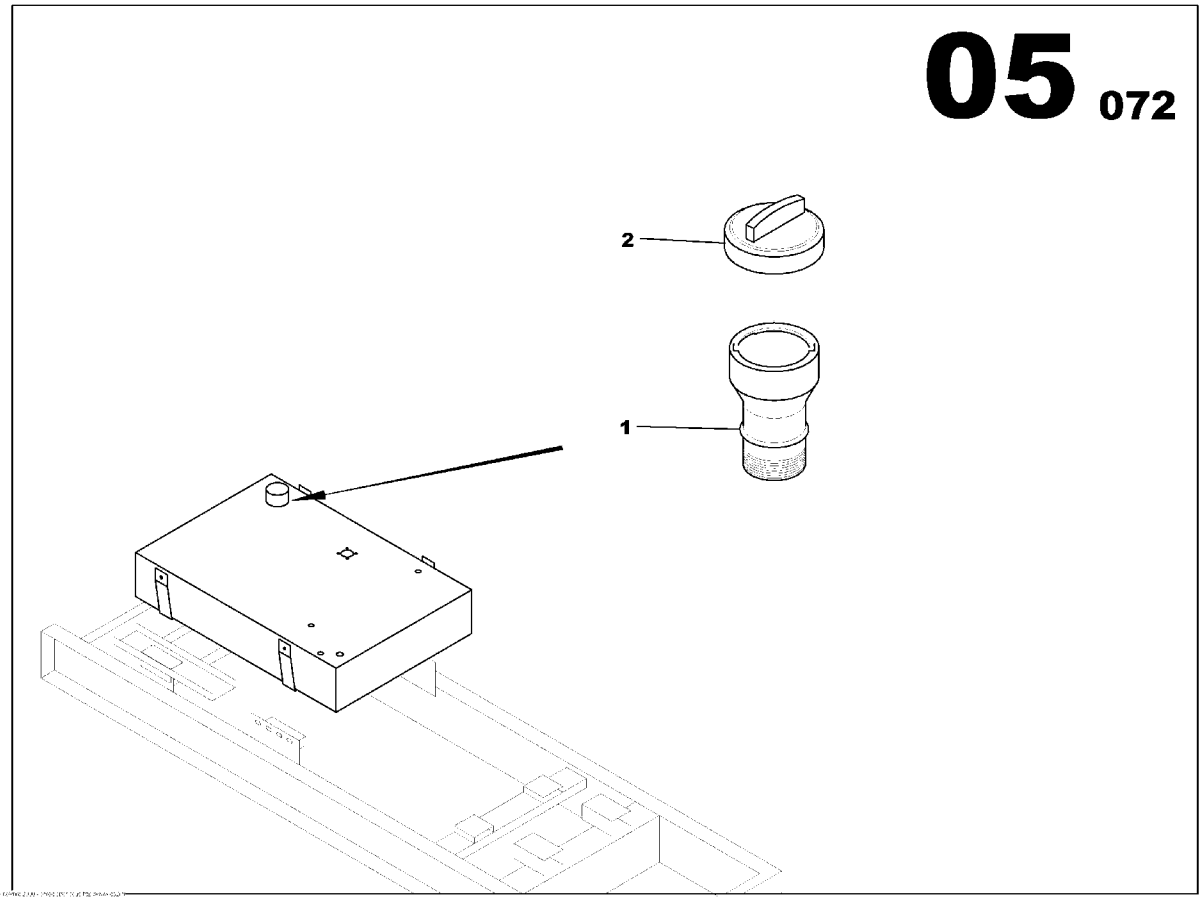

FUEL FILLING FUNNEL BASE TANK
85629541

Part numbers listed are only parts used in this model

Item	Part No.	Description	Qty	Un	From SN	To SN	Order PN	Page
1	85403517	FUEL FILLING FUNNEL BASE TANK	1	UN			85403517	
2	85509222	TANK CAP	1	UN			85509222	

COMBUSTIBLE VENT TANK ASSEMBLY

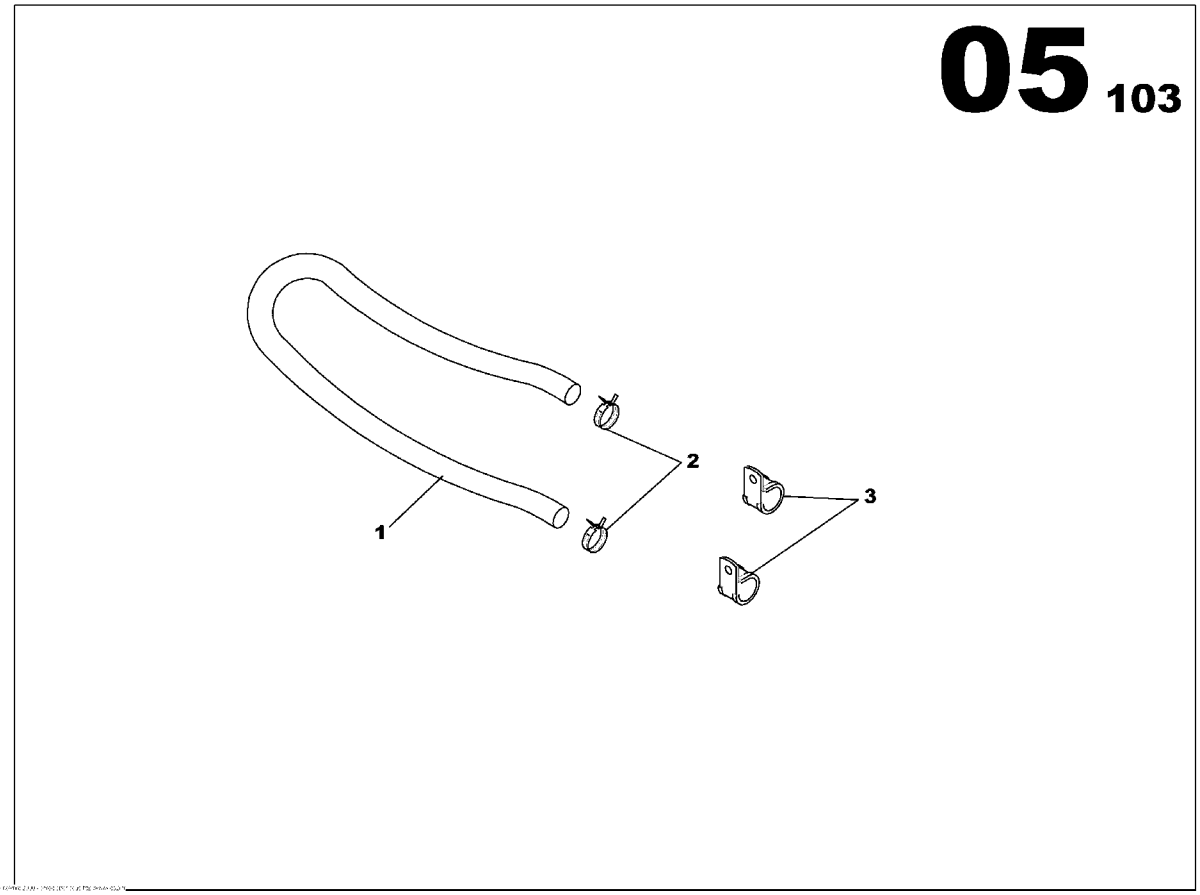

COMBUSTIBLE VENT TANK ASSEMBLY
17130196

Part numbers listed are only parts used in this model

Item	Part No.	Description	Qty	Un	From SN	To SN	Order PN	Page
1	85416436	FLEXIBLE HOSE D8x14	1	ML			85416436	
2	17130824	SPRING CLAMP D10/13	1	UN			17130824	
3	17130816	CLAMP D20	2	UN			17130816	

LEAKAGE DETECTION RETENTION BUND ASSEMBLY

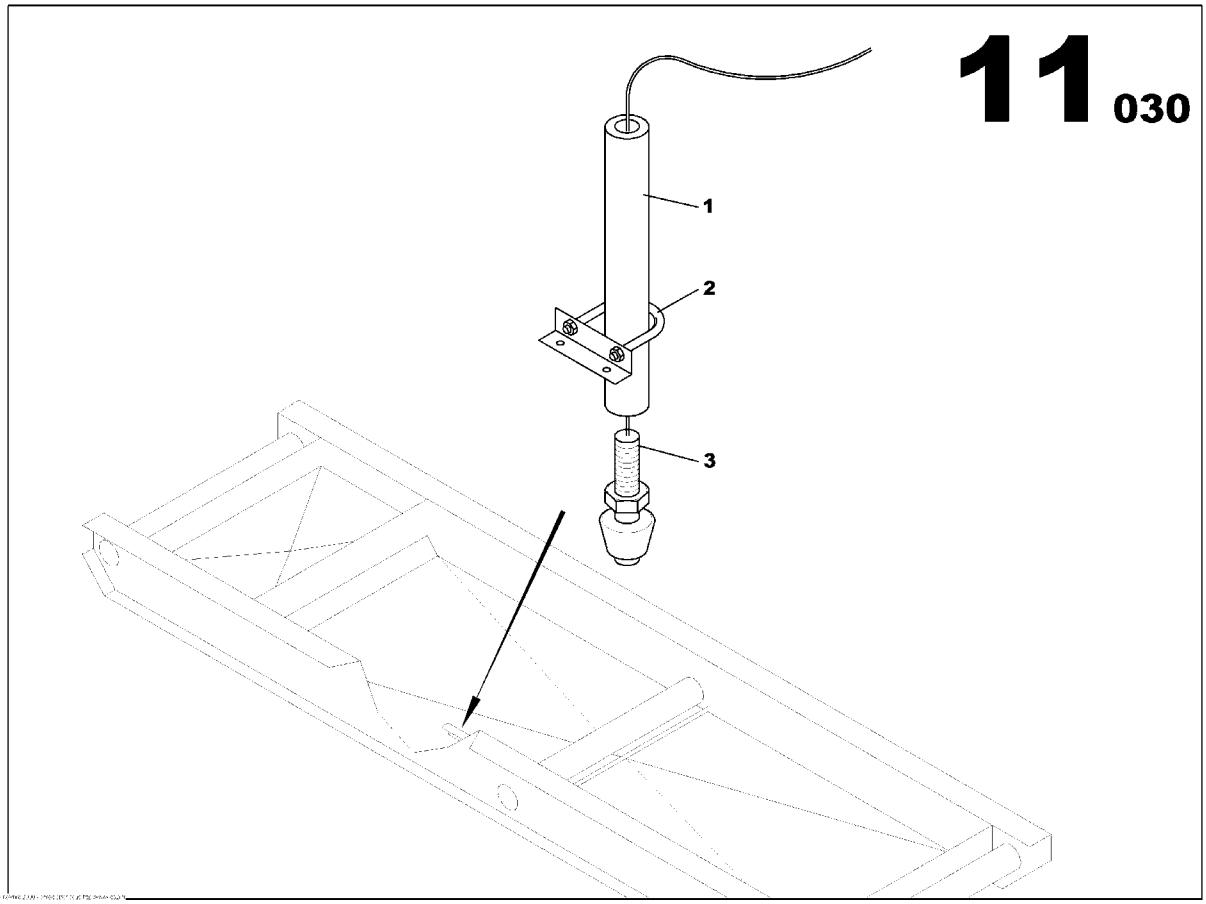

LEAKAGE DETECTION RETENTION BUND ASSEMBLY
17130279

Part numbers listed are only parts used in this model

Item	Part No.	Description	Qty	Un	From SN	To SN	Order PN	Page
1	17130428	DETECTION ESCAPE SWITCH BRACKET	1	UN			17130428	
2	85417772	HOSE CLAMP D17	1	UN			85417772	
3	85417459	LEVEL SWITCH	1	UN			85417459	

TANK GAUGE ASSEMBLY

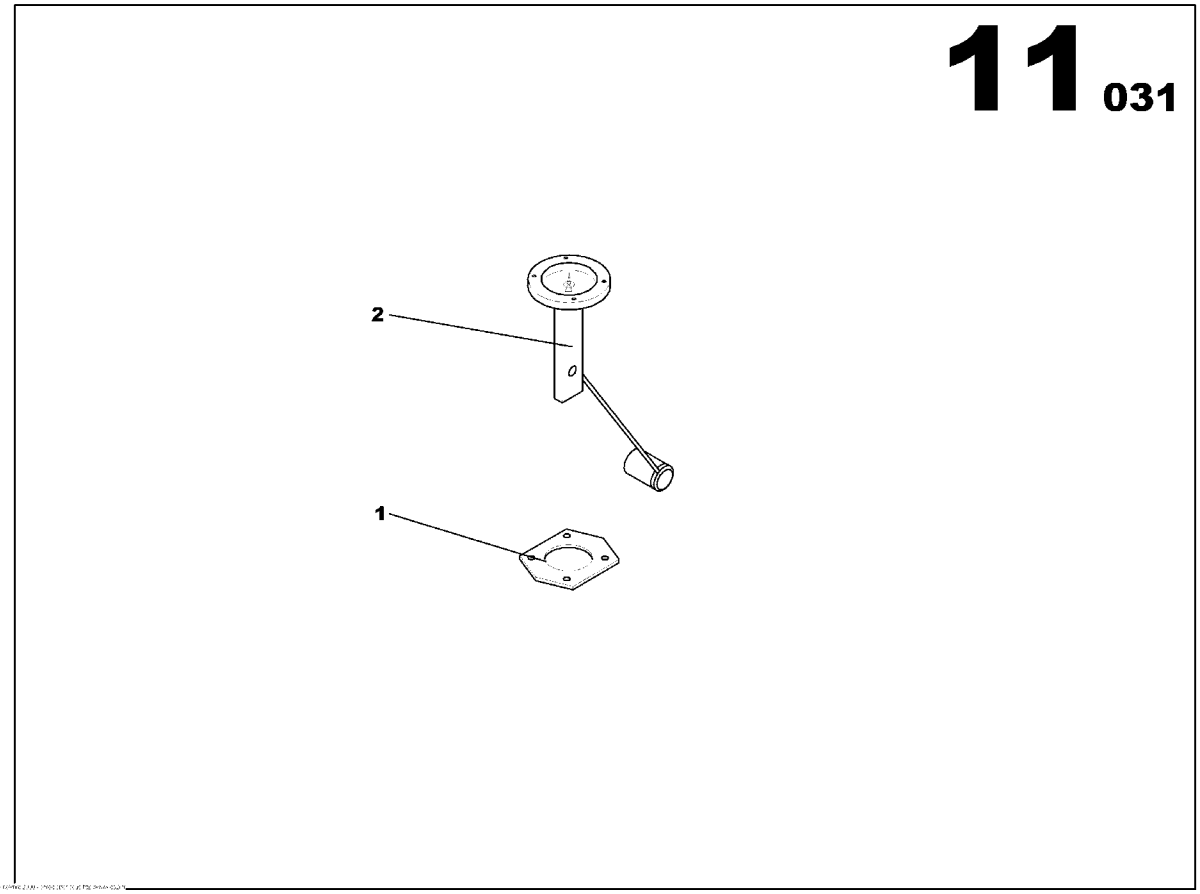

TANK GAUGE ASSEMBLY
17130287

Part numbers listed are only parts used in this model

Item	Part No.	Description	Qty	Un	From SN	To SN	Order PN	Page
1	85490811	SPECIAL FLANGE GASKET	1	UN			85490811	
2	17130295	BASE TANK FUEL GAUGE	1	UN			17130295	

STARTING FUNCTION

Non illustré
Not illustrated

STARTING FUNCTION

Part numbers listed are only parts used in this model

Item	Part No.	Description	Qty	Un	From SN	To SN	Order PN	Page
1		ELECTRIC STARTER ASSEMBLY	1	UN				63

ELECTRIC STARTER ASSEMBLY

Non illustré
Not illustrated

ELECTRIC STARTER ASSEMBLY

Part numbers listed are only parts used in this model

Item	Part No.	Description	Qty	Un	From SN	To SN	Order PN	Page
	17130261	ELECTRIC STARTER ASSEMBLY	1	UN			17130261	65

ELECTRIC STARTER ASSEMBLY

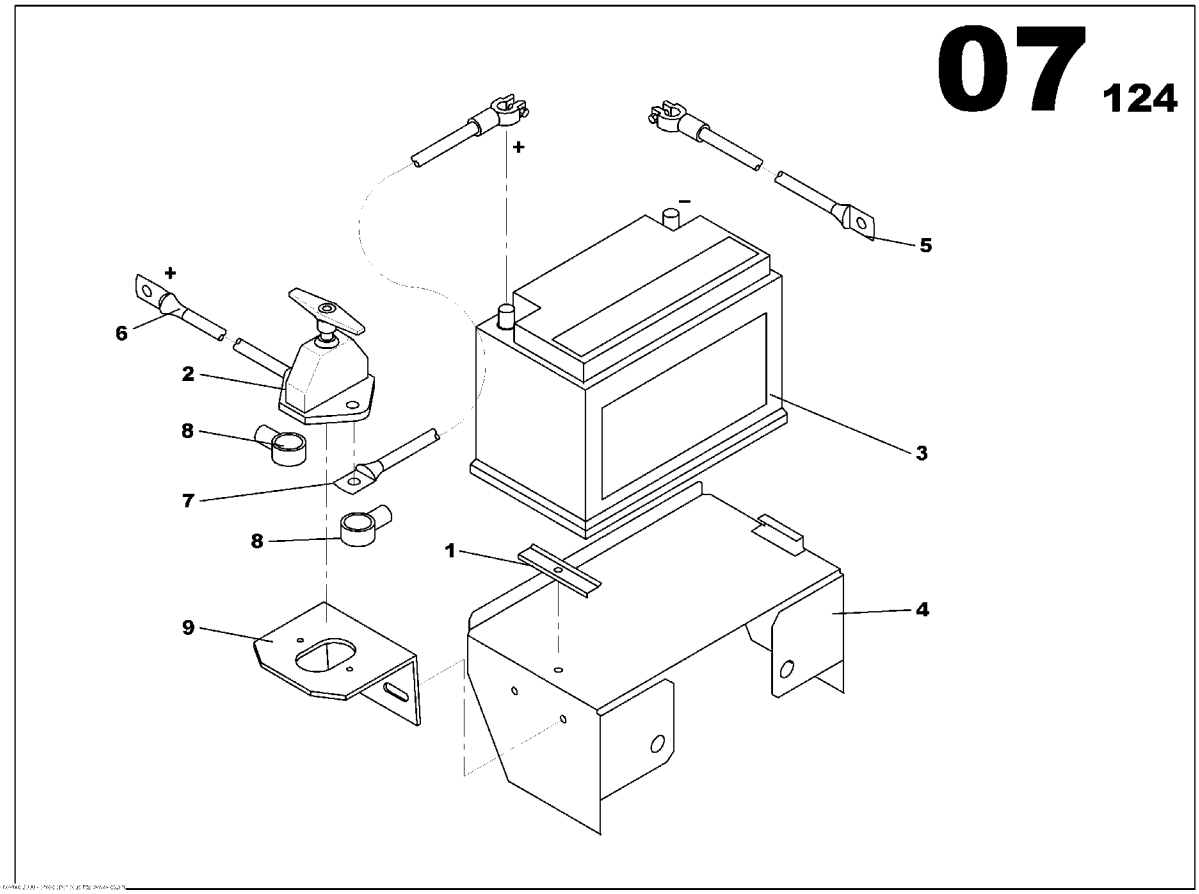

ELECTRIC STARTER ASSEMBLY
17130261

Part numbers listed are only parts used in this model

Item	Part No.	Description	Qty	Un	From SN	To SN	Order PN	Page
1	85403699	BATTERY FIXING BRACKET	1	UN			85403699	
2	85403723	BATTERY ISOLATOR SWITCH	1	UN			85403723	
3	85403715	STARTING BATTERY 12V 70Ah 400A	1	UN			85403715	
4	85633410	BATTERY SUPPORT BRACKET	1	UN			85633410	
5	85412633	BATTERY CABLE(-) 35mm2 L1200 BLACK	1	UN			85412633	
6	85634376	BATTERY CABLE(+) 35mm2 L730 RED	1	UN			85634376	
7	17130410	BATTERY CABLE 35mm2 L0900 RED	1	UN			17130410	
8	85502235	COWL	2	UN			85502235	
9	85403707	BATTERY ISOLATOR BRACKET	1	UN			85403707	

EXHAUST FUNCTION

Non illustré
Not illustrated

EXHAUST FUNCTION

Part numbers listed are only parts used in this model

Item	Part No.	Description	Qty	Un	From SN	To SN	Order PN	Page
1	85633717	EXHAUST FITTING KIT M106 ASSEMBLY	1	UN			85633717	69
2	85633758	HOT SPOT GUARDS ASSEMBLY	1	UN			85633758	73

EXHAUST FITTING KIT M106 ASSEMBLY

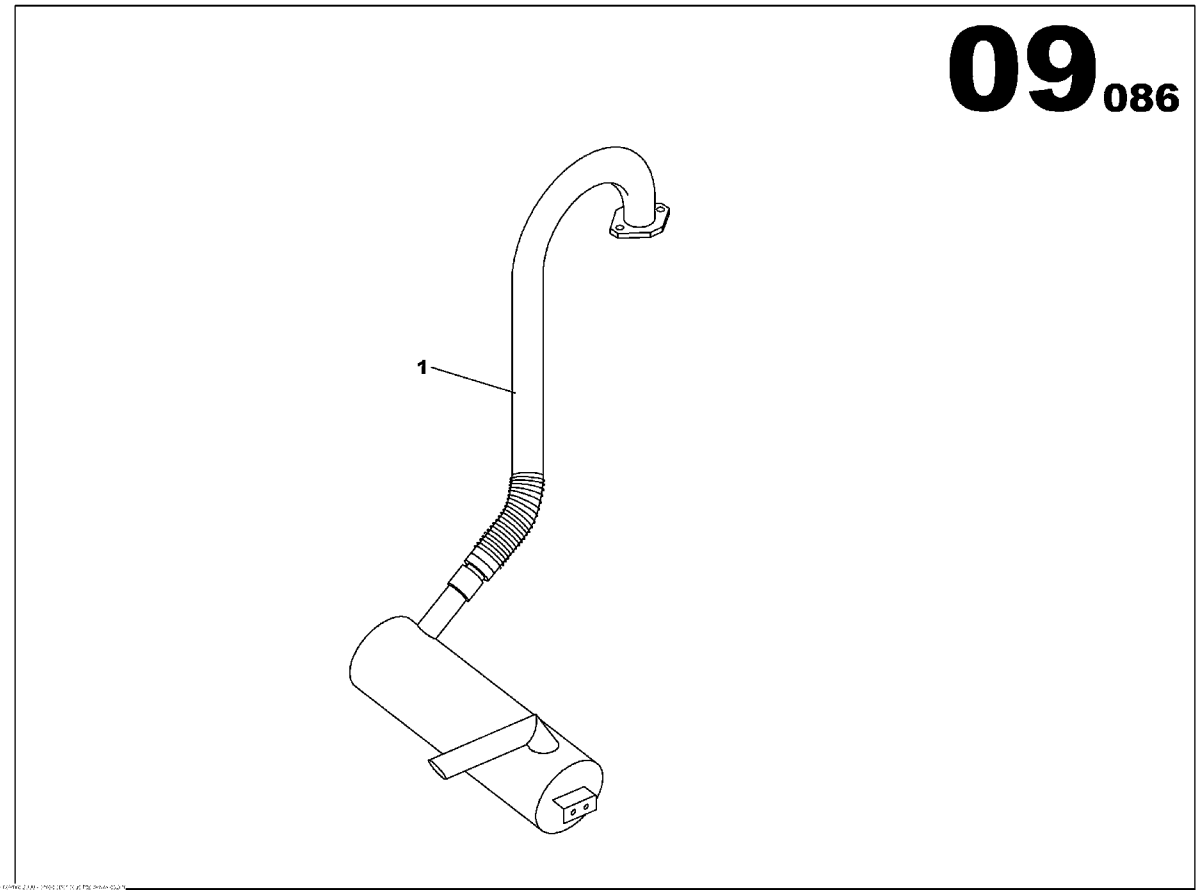

EXHAUST FITTING KIT M106 ASSEMBLY
85633717

Part numbers listed are only parts used in this model

Item	Part No.	Description	Qty	Un	From SN	To SN	Order PN	Page
1	85633709	EXHAUST MUFFLER M107 ASSEMBLY	1	UN			85633709	71

EXHAUST MUFFLER M107 ASSEMBLY

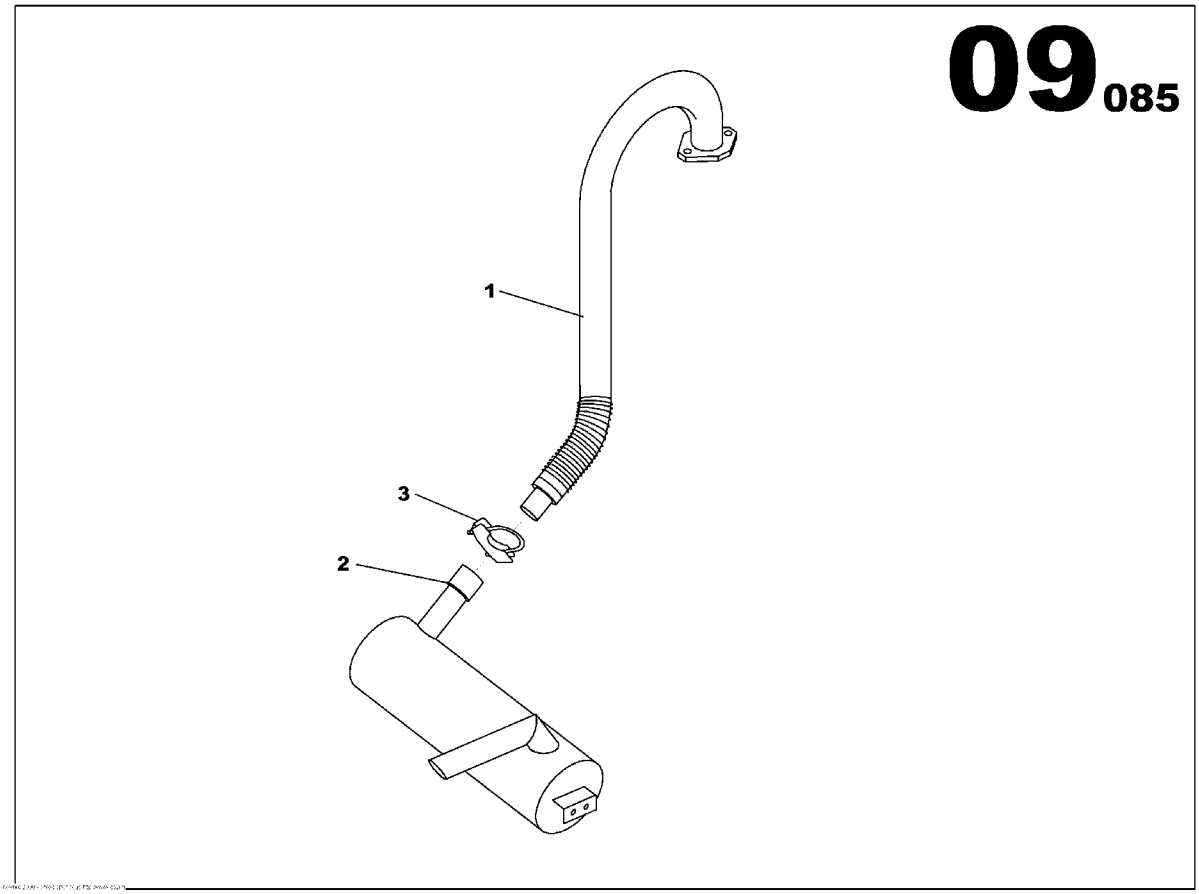

EXHAUST MUFFLER M107 ASSEMBLY
85633709

Part numbers listed are only parts used in this model

Item	Part No.	Description	Qty	Un	From SN	To SN	Order PN	Page
1	85633691	EXHAUST PIPE D50 JD	1	UN			85633691	
2	85633832	23dB MUFFLER	1	UN	03005015		85633832	
3	85429421	HOSE CLAMP D54	1	UN	03002053		85429421	

HOT SPOT GUARDS ASSEMBLY

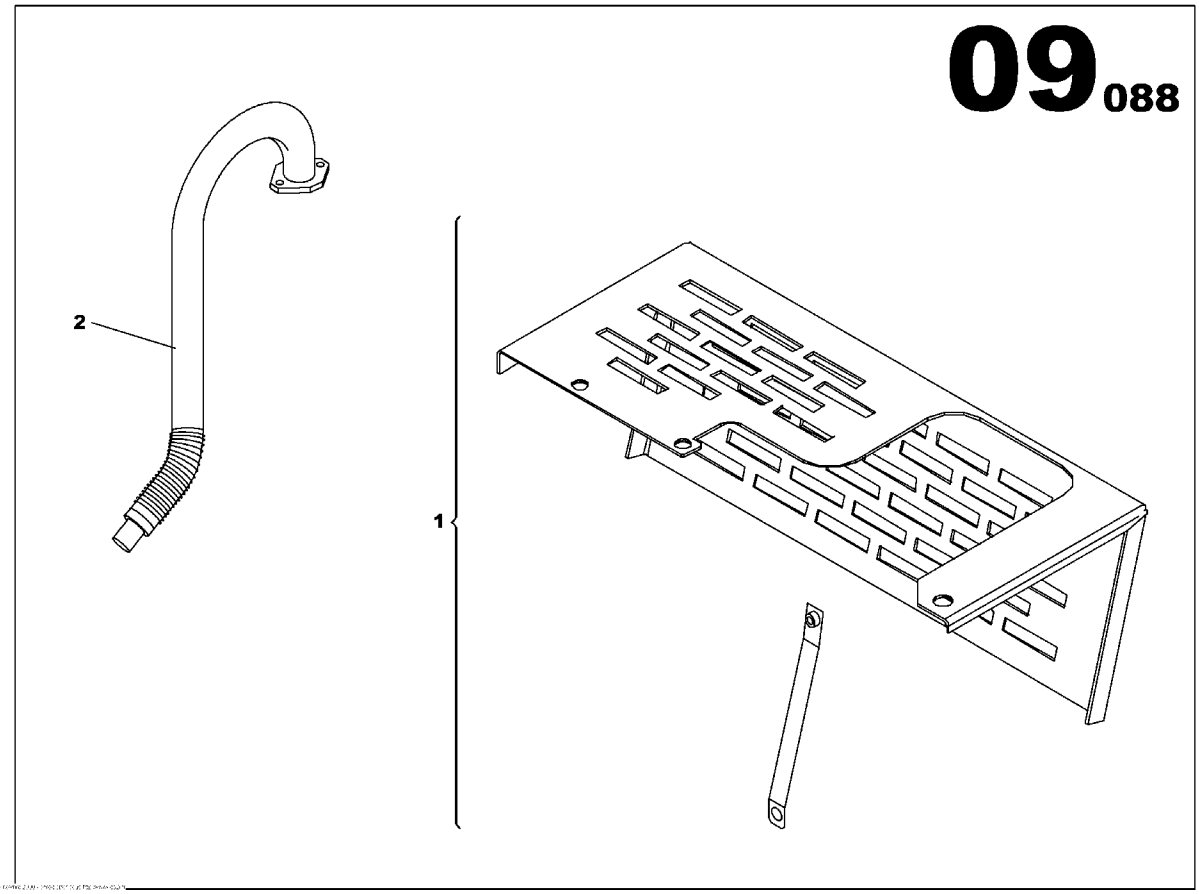

HOT SPOT GUARDS ASSEMBLY
85633758

Part numbers listed are only parts used in this model

Item	Part No.	Description	Qty	Un	From SN	To SN	Order PN	Page
1	85633816	HOT SPOT GUARDS ASSEMBLY	1	UN			85633816	75
2	85633741	EXHAUST PIPE D50 JD	1	UN			85633741	

HOT SPOT GUARDS ASSEMBLY

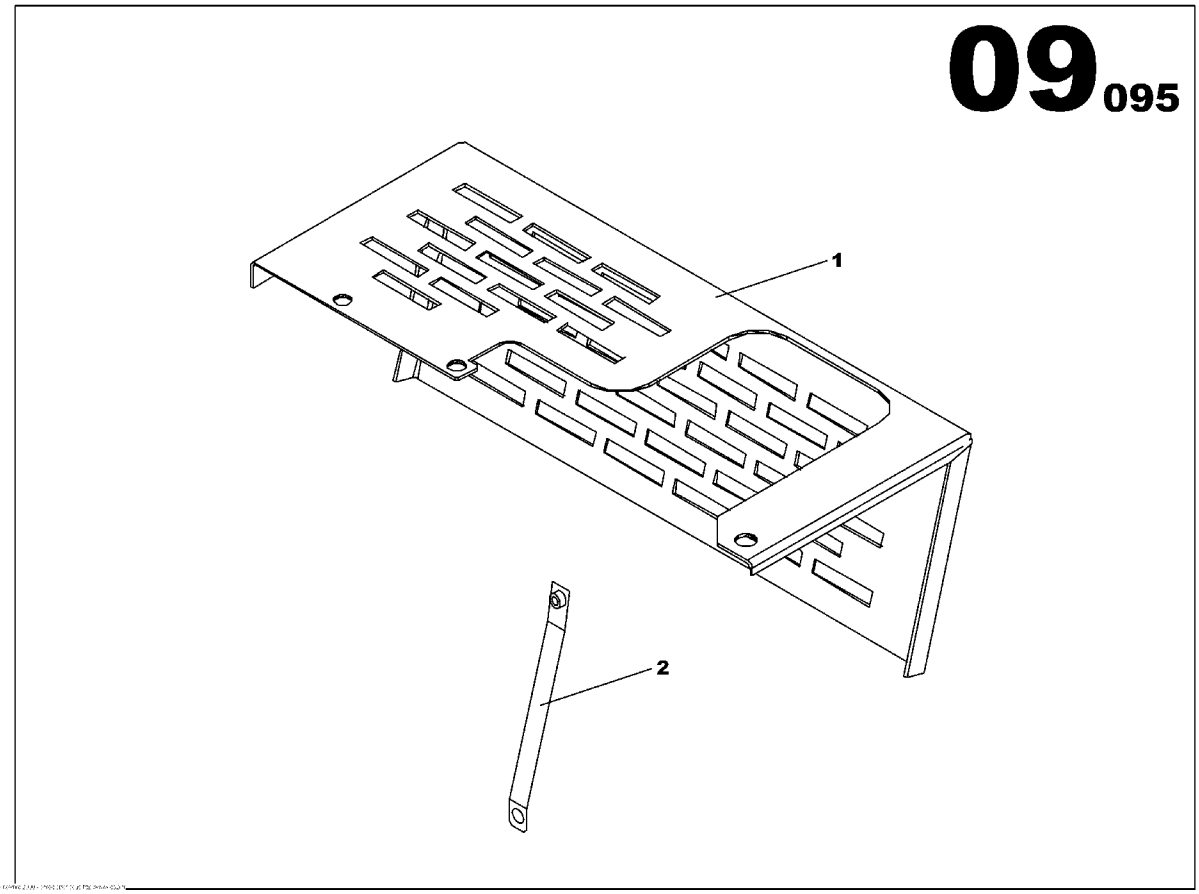

HOT SPOT GUARDS ASSEMBLY
85633816

Part numbers listed are only parts used in this model

Item	Part No.	Description	Qty	Un	From SN	To SN	Order PN	Page
1	85634087	HOT SPOT GUARD	1	UN			85634087	
2	85634111	HOT SPOT GUARD BRACKET JD 3029D LOWER	1	UN			85634111	

FRAME FUNCTION

Non illustré
Not illustrated

FRAME FUNCTION

Part numbers listed are only parts used in this model

Item	Part No.	Description	Qty	Un	From SN	To SN	Order PN	Page
1		FRAME M107 ASSEMBLY	1	UN				79
2	85501492	G33 ACCESSORY ASSEMBLY	1	UN			85501492	83

FRAME M107 ASSEMBLY

Non illustré
Not illustrated

FRAME M107 ASSEMBLY

Part numbers listed are only parts used in this model

Item	Part No.	Description	Qty	Un	From SN	To SN	Order PN	Page
	17130311	FRAME M107 ASSEMBLY	1	UN			17130311	81

FRAME M107 ASSEMBLY

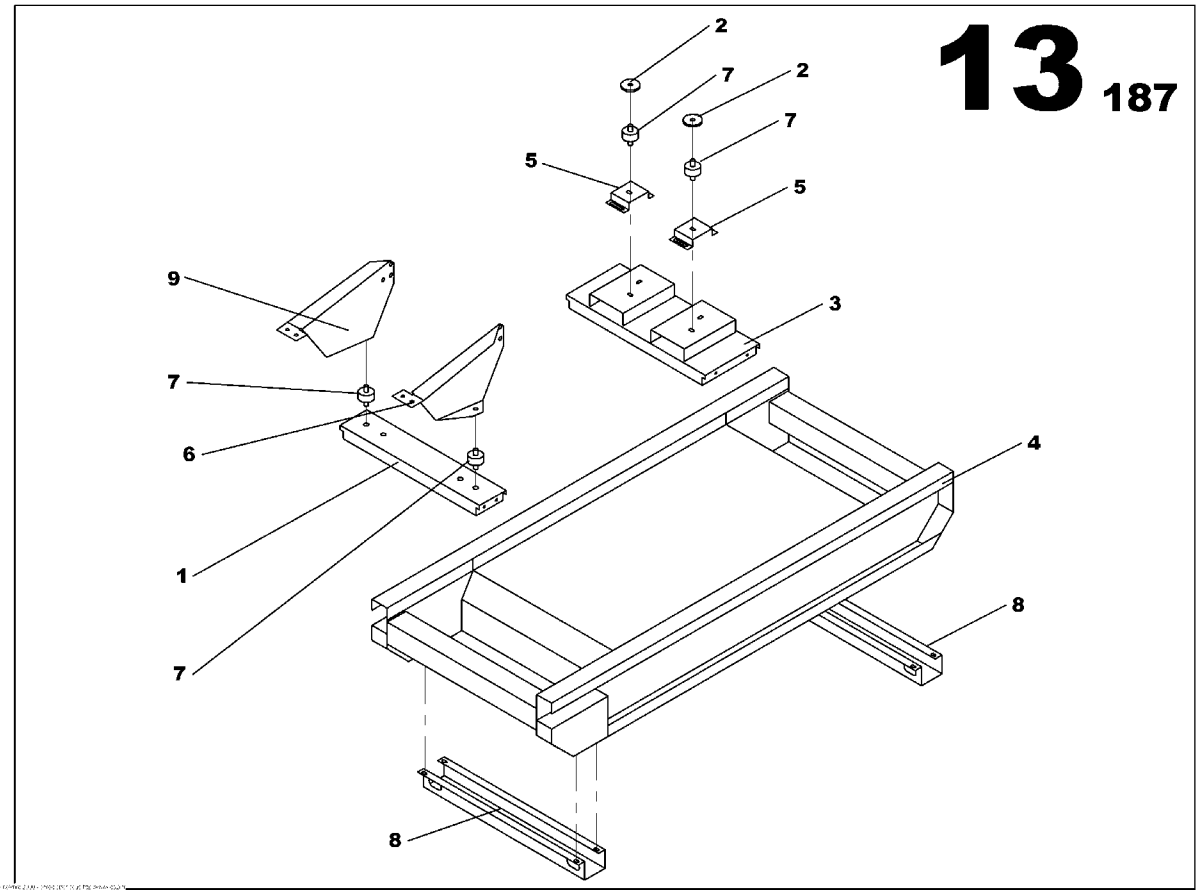

FRAME M107 ASSEMBLY
17130311

Part numbers listed are only parts used in this model

Item	Part No.	Description	Qty	Un	From SN	To SN	Order PN	Page
1	17130378	ENGINE TRAVERSE	1	UN			17130378	
2	85621340	WASHER 15x80	2	UN			85621340	
3	17130386	ALTERNATOR TRAVERSE M107	1	UN			17130386	
4	17130303	FRAME M107	1	UN			17130303	
5	85429215	ALTERNATOR BRACKET h40	2	UN			85429215	
6	85621092	ENGINE SUPPORT JD 3029 LEFT SIDE	1	UN			85621092	
7	85401032	ANTI-VIBRATION MOUNT 600daN 8mm	4	UN			85401032	
8	17130394	FORK LIFT CHANNEL	2	UN			17130394	
9	85621100	ENGINE SUPPORT JD 3029 RIGHT SIDE	1	UN			85621100	

G33 ACCESSORY ASSEMBLY

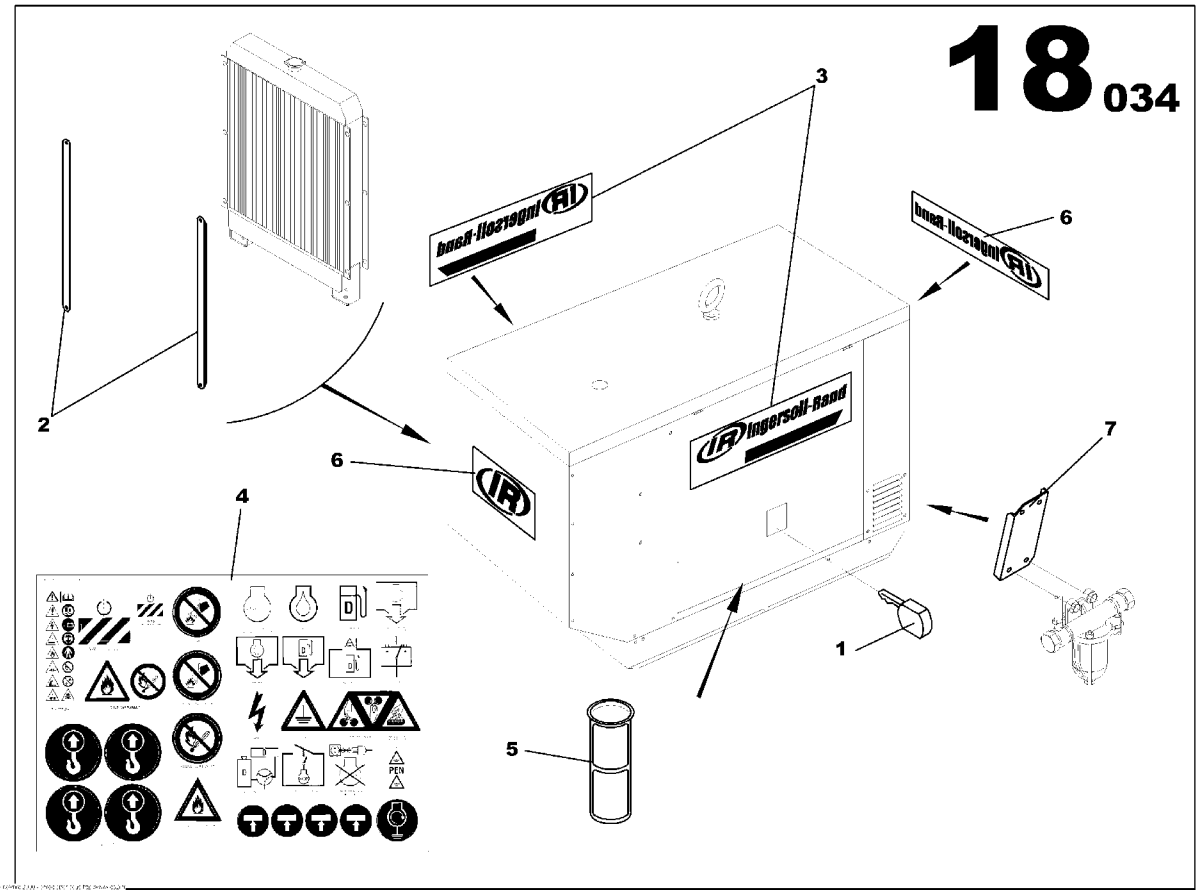

G33 ACCESSORY ASSEMBLY
85501492

Part numbers listed are only parts used in this model

Item	Part No.	Description	Qty	Un	From SN	To SN	Order PN	Page
1	85509263	WBH LATCHE KEY	1	UN			85509263	
2	85633675	AIR DEFLECTOR RADIATOR	2	UN	03001646		85633675	
3	85503761	STICKER G33	2	UN			85503761	
4	85506467	STICKER	1	UN			85506467	
5	85633386	FUEL FILTER	1	UN	03010525		85633386	
6	85636553	DECALS ASSEMBLY	1	UN			85636553	85
7	85627164	FUEL FILTER BRACKET	1	UN			85627164	

DECALS ASSEMBLY

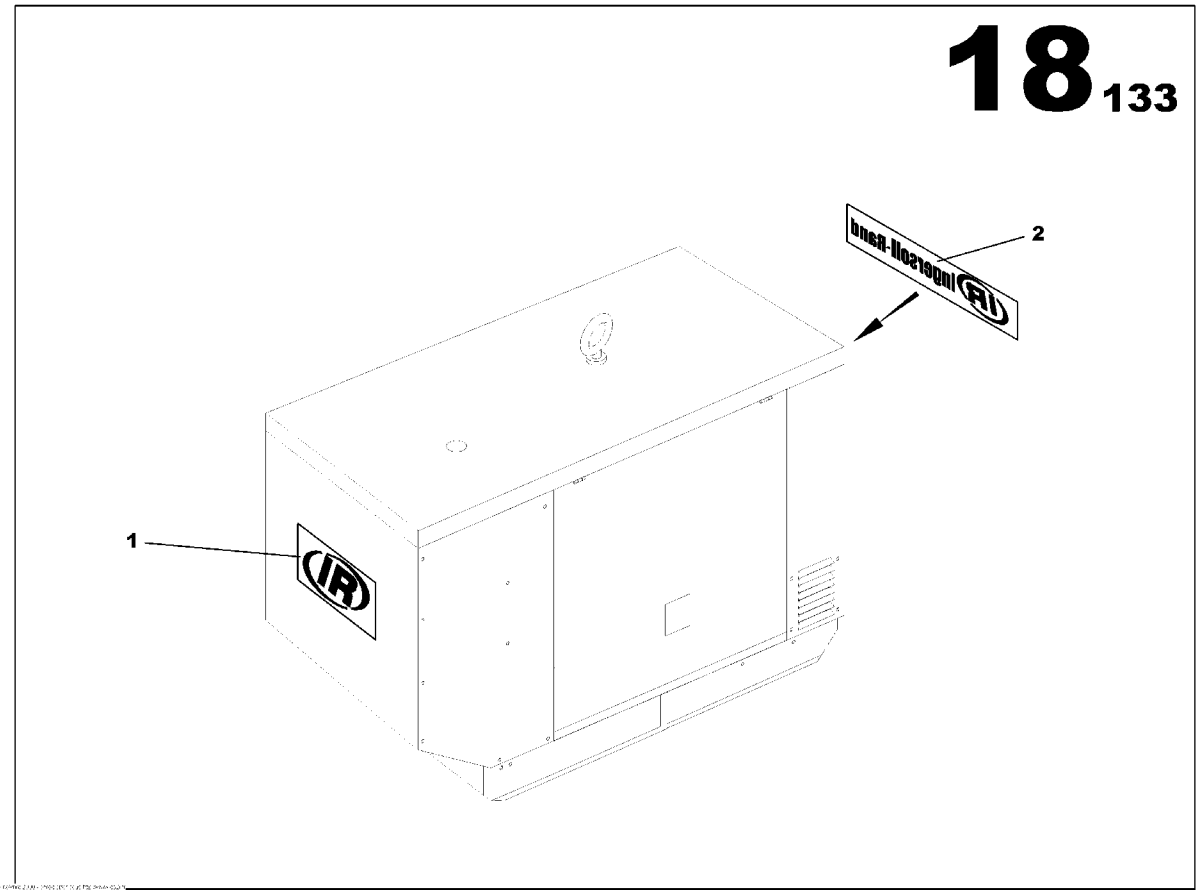

DECALS ASSEMBLY
85636553

Part numbers listed are only parts used in this model

Item	Part No.	Description	Qty	Un	From SN	To SN	Order PN	Page
1	85500197	STICKER IR	1	UN			85500197	
2	85500221	STICKER IR SYMBOL	1	UN			85500221	

CANOPY FONCTION

Non illustré
Not illustrated

CANOPY FONCTION

Part numbers listed are only parts used in this model

Item	Part No.	Description	Qty	Un	From SN	To SN	Order PN	Page
1	85634202	CANOPY M107 ASSEMBLY	1	UN			85634202	89
2	85491991	EMERGENCY STOP PANEL ASSEMBLY	1	UN			85491991	99
3	85634640	EMERGENCY STOP PANEL ASSEMBLY	1	UN			85634640	101
4	85638914	EARTH ROD WITH CABLE CANOPY ASSEMBLY	1	UN			85638914	107

CANOPY M107 ASSEMBLY

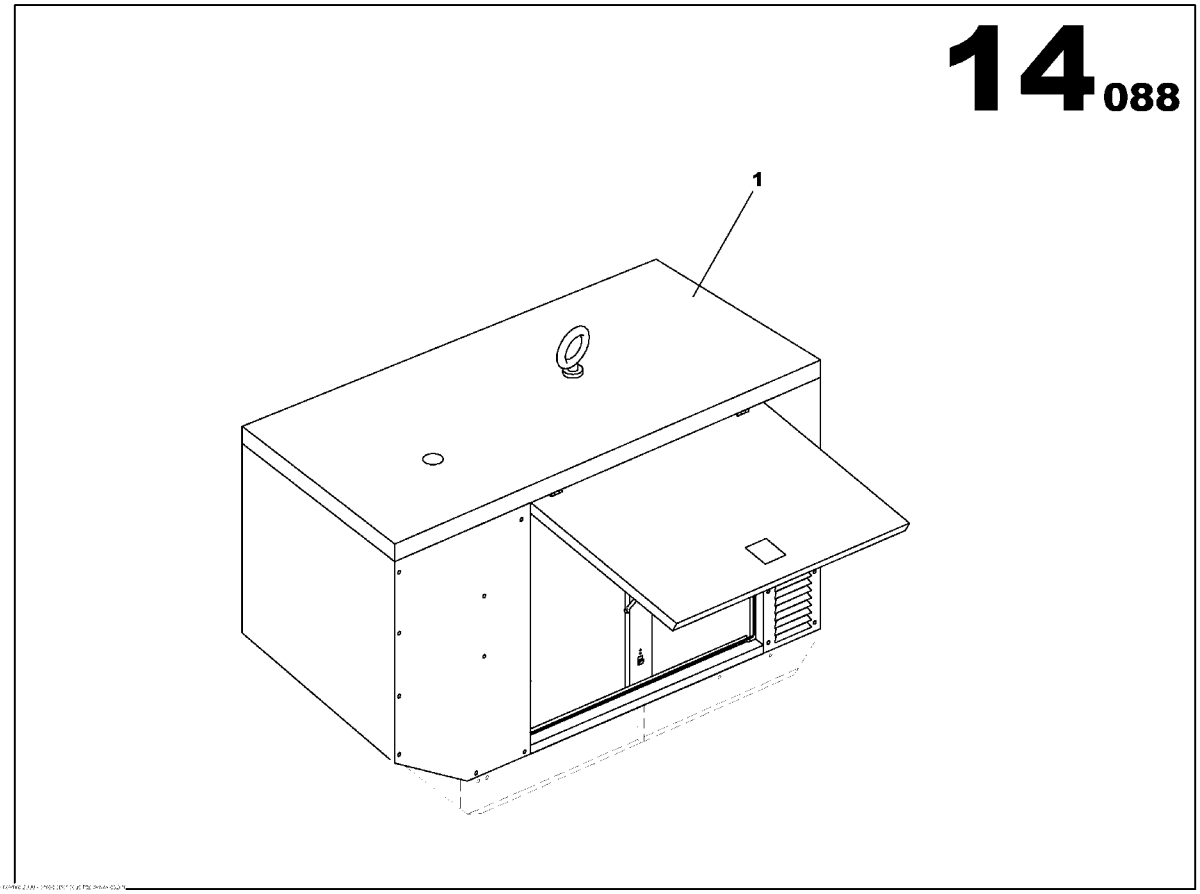

CANOPY M107 ASSEMBLY
85634202

Part numbers listed are only parts used in this model

Item	Part No.	Description	Qty	Un	From SN	To SN	Order PN	Page
1	85634194	CANOPY M107 ASSEMBLY	1	UN			85634194	91

CANOPY M107 ASSEMBLY

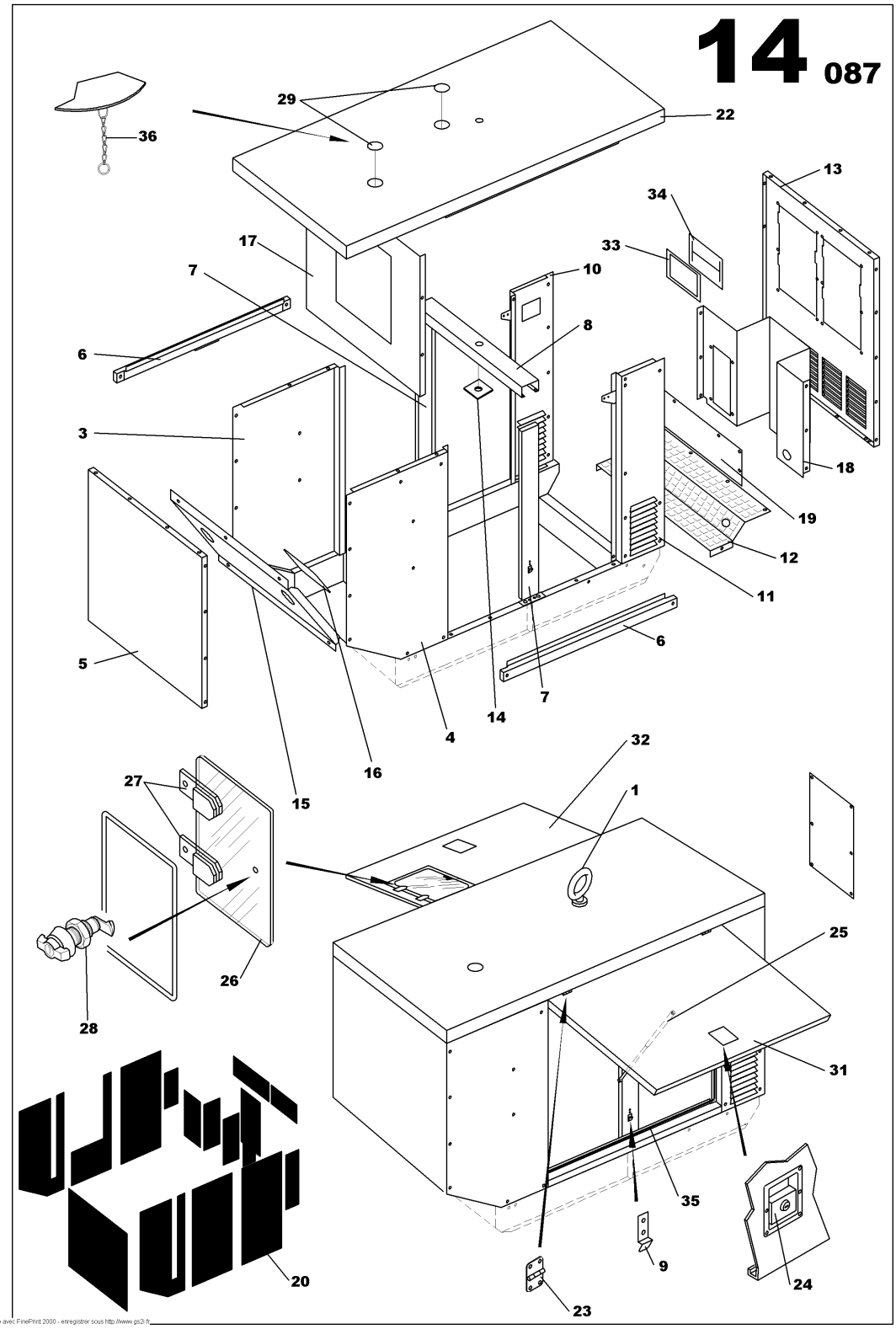

CANOPY M107 ASSEMBLY
85634194

Part numbers listed are only parts used in this model

Item	Part No.	Description	Qty	Un	From SN	To SN	Order PN	Page
1	85492700	LIFTING EYE D58	1	UN			85492700	
3	85415354	M107 CANOPY RIGHT HEAD PANEL	1	UN			85415354	
4	85415362	M107 CANOPY LEFT HEAD PANEL	1	UN			85415362	
5	85415347	M107 CANOPY HEAD PANEL	1	UN			85415347	
6	85415370	CANOPY SIDE PANEL M107	2	UN			85415370	
7	85412484	SIDE SUPPORT ARCH UPRIGHTS M107	2	UN			85412484	
8	85412492	TRANSVERSE ARCH SUPPORT M107	1	UN			85412492	
9	85413516	STRIKER PLATE M107 CANOPY DOOR	2	UN			85413516	
10	85497410	M107 CANOPY RIGHT REAR PANEL	1	UN			85497410	
11	85497428	M107 CANOPY LEFT REAR PANEL	1	UN			85497428	
12	85497436	REAR AIR INTAKE LOUVER M107 CANOPY	1	UN			85497436	
13	85415313	M107 CANOPY REAR PANEL	1	UN			85415313	
14	85509594	SUPPORT ARCH BRACKET PANEL	1	UN			85509594	
15	85509560	RADIATOR BLACK PANEL M107	1	UN			85509560	
16	85509578	RADIATOR BLACK PANEL M107	1	UN			85509578	
17	85509586	RADIATOR PANEL M107 JD 3039D	1	UN			85509586	
18	85633048	AIR DEFLECTOR	1	UN			85633048	
19	85633055	AIR DEFLECTOR	1	UN			85633055	
20	85633063	SOUNDPROOF PANELS BATCH M107	1	UN			85633063	
22	85634319	CANOPY TOP M107	1	UN			85634319	
23	85406130	DOOR HINGE	4	UN			85406130	
24	85509305	CANOPY DOOR LOCK KEY LOCK	2	UN			85509305	
25	85416477	GAS FILLED DAMPER 70kg ROD D10	2	UN			85416477	
26	85416501	SECURITY WINDOW M107	1	UN			85416501	
27	85412831	DOOR HINGE	2	UN			85412831	
28	85402907	SLAM SHUT ASSEMBLY	1	UN			85402907	95
29	85621142	FLAP D160	2	UN			85621142	
31	85509859	CANOPY DOOR M107 LEFT	1	UN			85509859	

CANOPY M107 ASSEMBLY

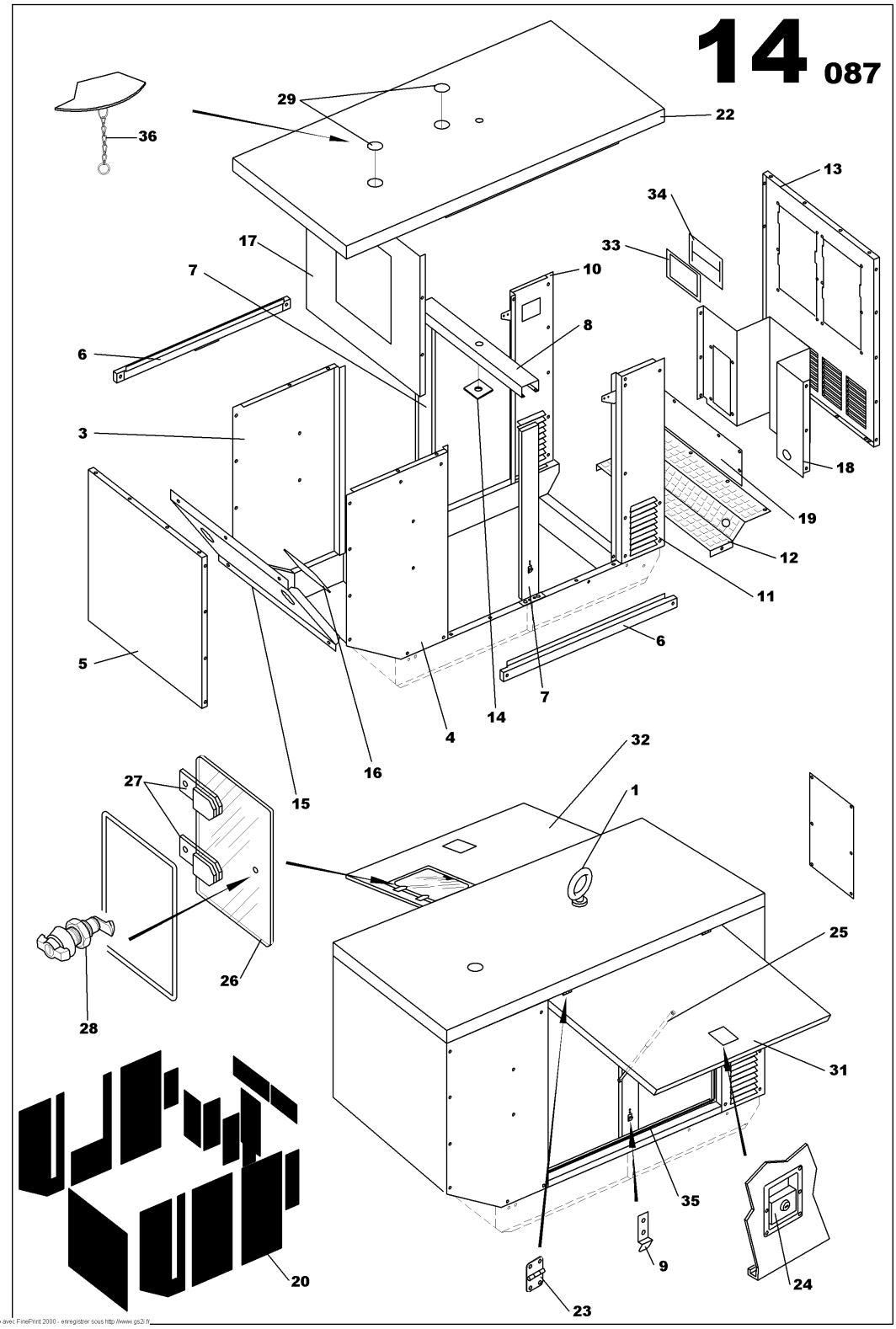

CANOPY M107 ASSEMBLY
85634194

Part numbers listed are only parts used in this model

Item	Part No.	Description	Qty	Un	From SN	To SN	Order PN	Page
32	85509842	CANOPY DOOR M107 RIGHT	1	UN			85509842	
33	85634939	WIRE BIB OUTPUT BRACKET M107	1	UN			85634939	
34	85621191	CABLE OUTPUT RUBBER SCREEN	1	UN			85621191	
35	85413722	LINEAR SEAL	8.3	ML			85413722	
36	85632016	CHAIN	2	UN			85632016	

SLAM SHUT ASSEMBLY

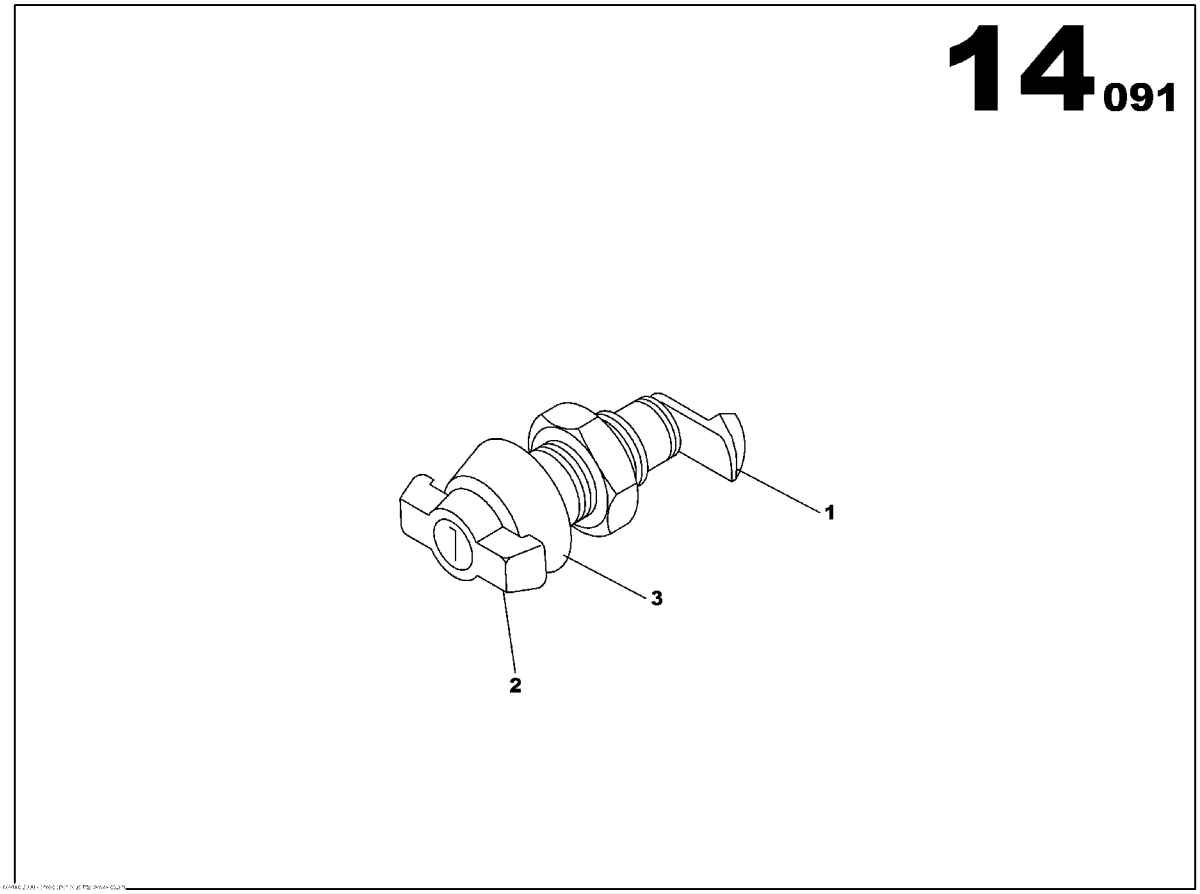

SLAM SHUT ASSEMBLY
85402907

Part numbers listed are only parts used in this model

Item	Part No.	Description	Qty	Un	From SN	To SN	Order PN	Page
1	85406221	SLAM SHUT DOOR LATCH	1	UN			85406221	
2	85406239	SLAM SHUT LATCH HANDLE	1	UN			85406239	97
3	85406247	SLAM SHUT FASTENER	1	UN			85406247	

SLAM SHUT LATCH HANDLE

Non illustré
Not illustrated

SLAM SHUT LATCH HANDLE
85406239

Part numbers listed are only parts used in this model

Item	Part No.	Description	Qty	Un	From SN	To SN	Order PN	Page
1	85632883	WBH LATCHE KEY	1	UN			85632883	

EMERGENCY STOP PANEL ASSEMBLY

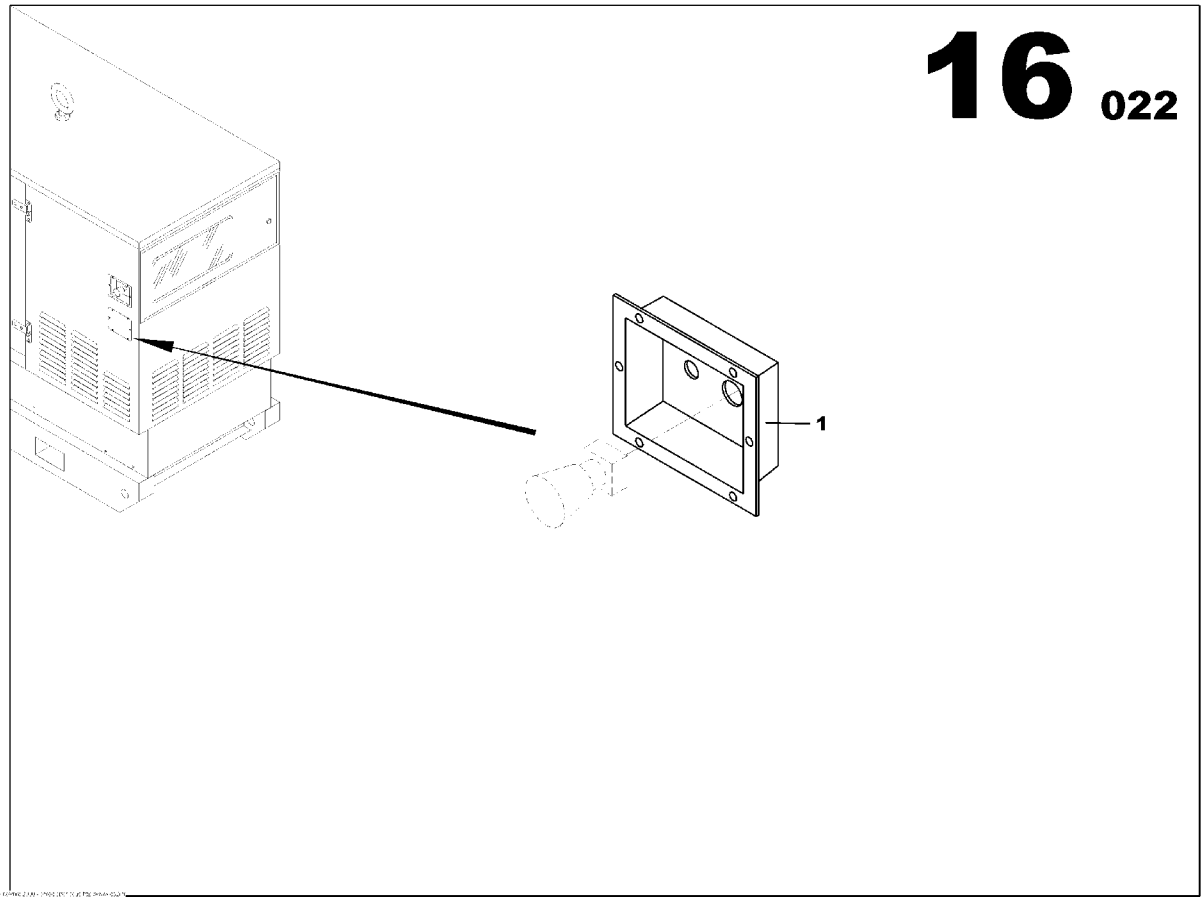

EMERGENCY STOP PANEL ASSEMBLY
85491991

Part numbers listed are only parts used in this model

Item	Part No.	Description	Qty	Un	From SN	To SN	Order PN	Page
1	85407294	EMERGENCY STOP PANEL	1	UN			85407294	

EMERGENCY STOP PANEL ASSEMBLY

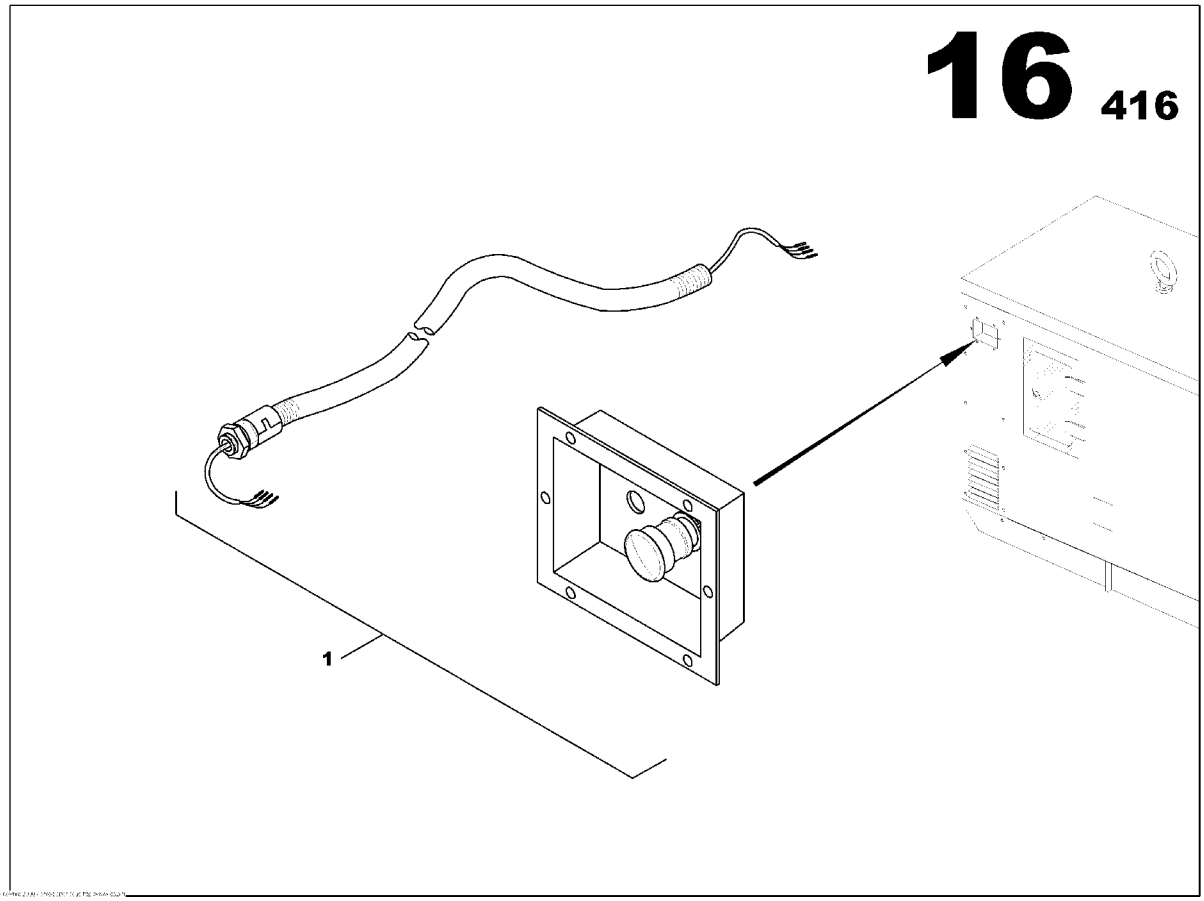

EMERGENCY STOP PANEL ASSEMBLY
85634640

Part numbers listed are only parts used in this model

Item	Part No.	Description	Qty	Un	From SN	To SN	Order PN	Page
1	85634657	EMERGENCY STOP PANEL ASSEMBLY	1	UN			85634657	103

EMERGENCY STOP PANEL ASSEMBLY

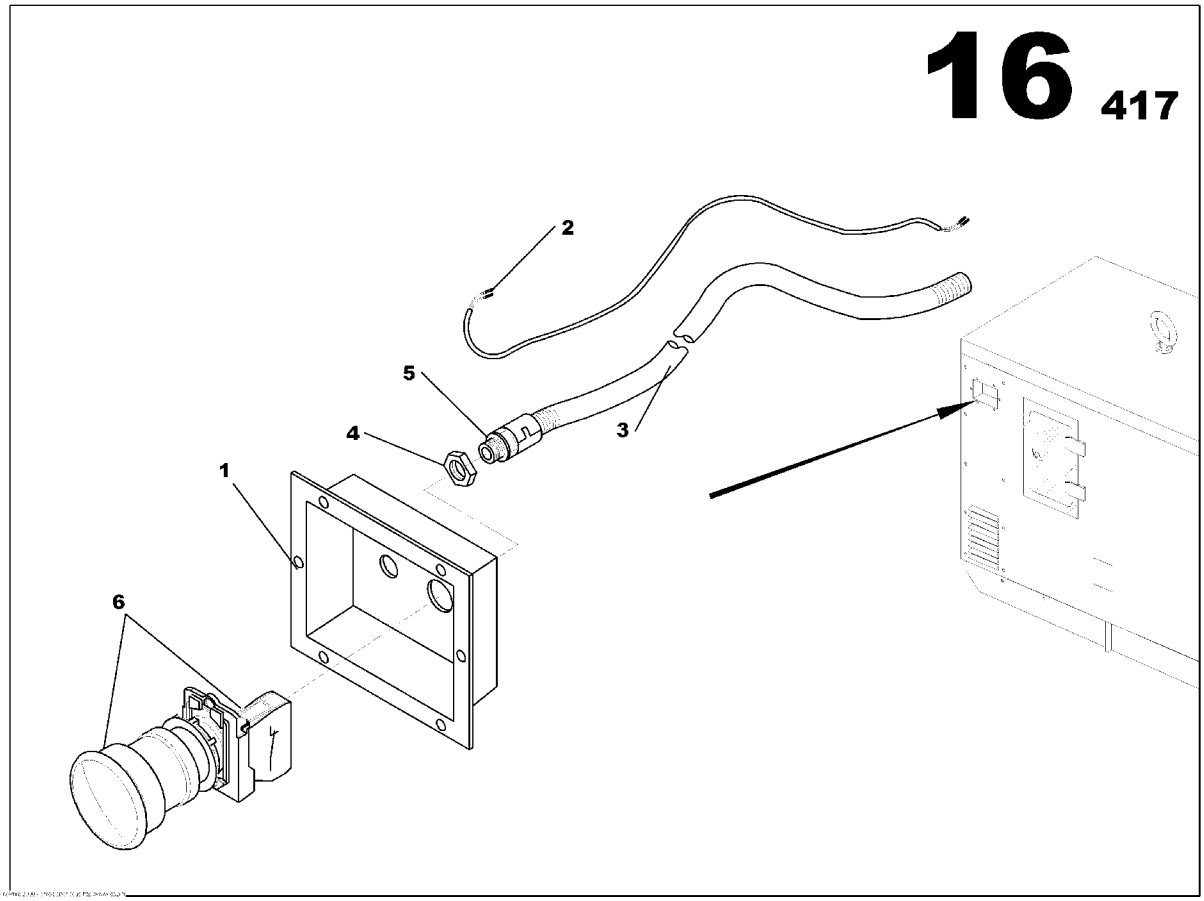

EMERGENCY STOP PANEL ASSEMBLY
85634657

Part numbers listed are only parts used in this model

Item	Part No.	Description	Qty	Un	From SN	To SN	Order PN	Page
1	85407294	EMERGENCY STOP PANEL	1	UN			85407294	
2	85635175	EMERGENCY STOP WIRING LOOM	1	UN			85635175	
3	85635241	ELECTRICAL SHAFT D09	1.2	ML			85635241	
4	85506061	GLAND NUT SCREW PG9	1	UN			85506061	
5	85499663	PIPE UNION PG9	1	UN			85499663	
6	85632370	EMRGENCY STOP BUTTON ASSEMBLY	1	UN			85632370	105

EMRGENCY STOP BUTTON ASSEMBLY

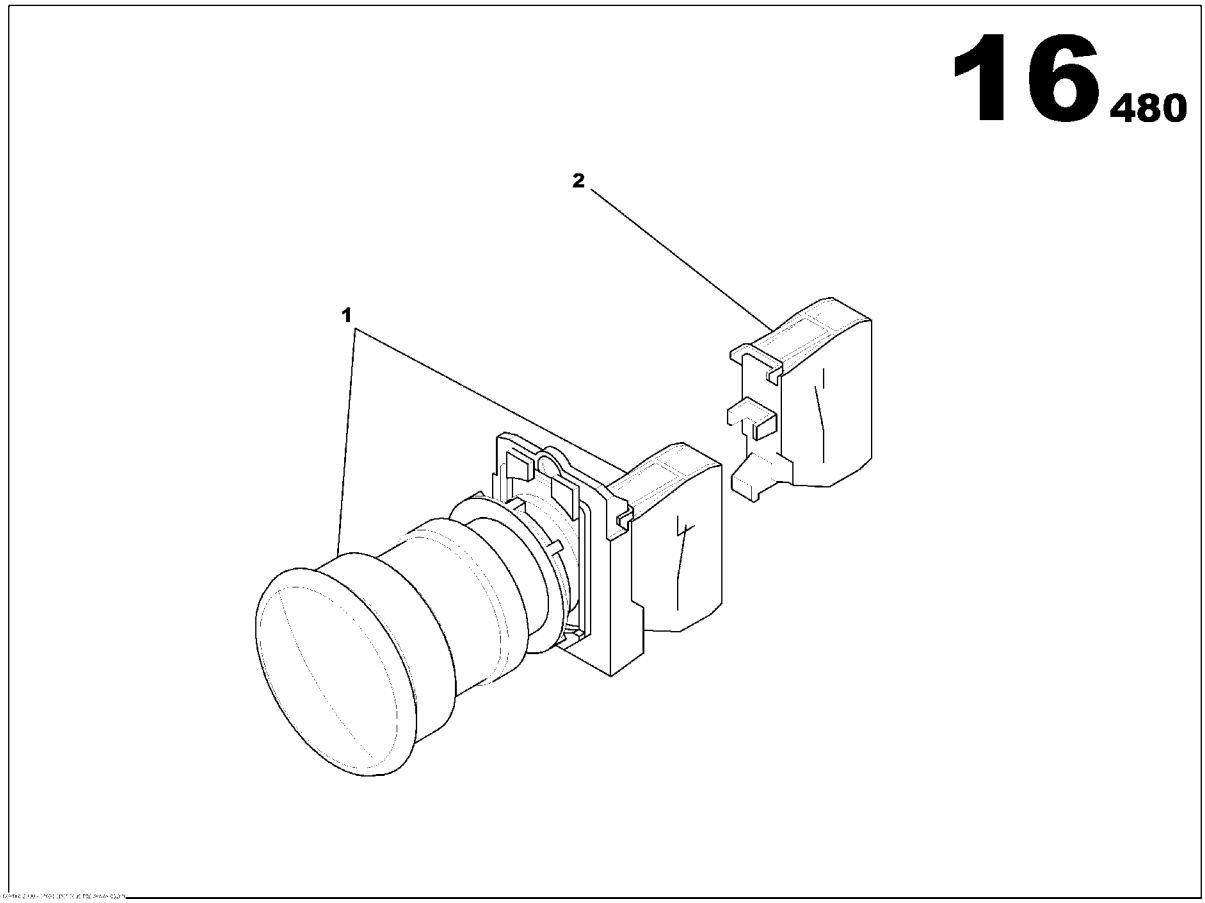

EMRGENCY STOP BUTTON ASSEMBLY
85632370

Part numbers listed are only parts used in this model

Item	Part No.	Description	Qty	Un	From SN	To SN	Order PN	Page
1	85631422	EMERGENCY STOP BUTTON	1	UN			85631422	
2	85632362	AUXILARY CONTACT NO	1	UN			85632362	

EARTH ROD WITH CABLE CANOPY ASSEMBLY

EARTH ROD WITH CABLE CANOPY ASSEMBLY
85638914

Part numbers listed are only parts used in this model

Item	Part No.	Description	Qty	Un	From SN	To SN	Order PN	Page
1	85639391	SCREWS ASSEMBLY	1	UN			85639391	109
2	85639086	EARTH ROD BRACKET	1	UN			85639086	
3	85408334	EARTH ROD L1000	1	UN			85408334	
4	85408227	NEUTRAL/EARTH SYSTEM CABLE 25mm2 L10000 Gr/Ye	1	UN			85408227	

SCREWS ASSEMBLY

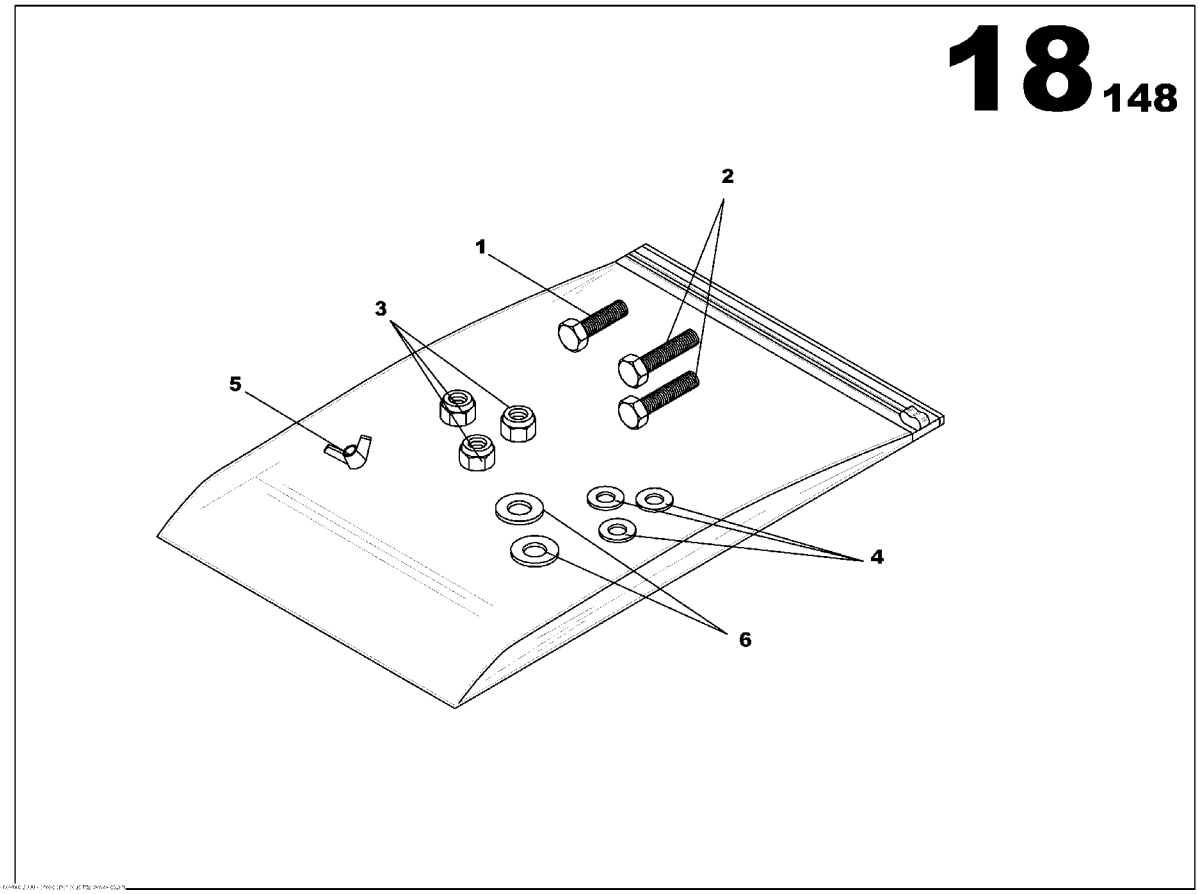

SCREWS ASSEMBLY
85639391

Part numbers listed are only parts used in this model

Item	Part No.	Description	Qty	Un	From SN	To SN	Order PN	Page
1	85626356	SCREW H M6x35	1	UN			85626356	
2	85639326	SCREW H M6x40	2	UN			85639326	
3	85507911	NUT M6	3	UN			85507911	
4	85507929	WASHER M6	3	UN			85507929	
5	85410157	WING NUT M6	1	UN			85410157	
6	85429793	WASHER 6x14	2	UN			85429793	

ELECTRICAL FUNCTION

Non illustré
Not illustrated

ELECTRICAL FUNCTION

Part numbers listed are only parts used in this model

Item	Part No.	Description	Qty	Un	From SN	To SN	Order PN	Page
1	85634780	CIRCUIT BREAKER PROTECTION PANEL OPTION	1	UN			85634780	113
2		CONTROL PANEL FONCTION	1	UN				115
3		ELECTRIC SUPPLY FUNCTION	1	UN				131

CIRCUIT BREAKER PROTECTION PANEL OPTION

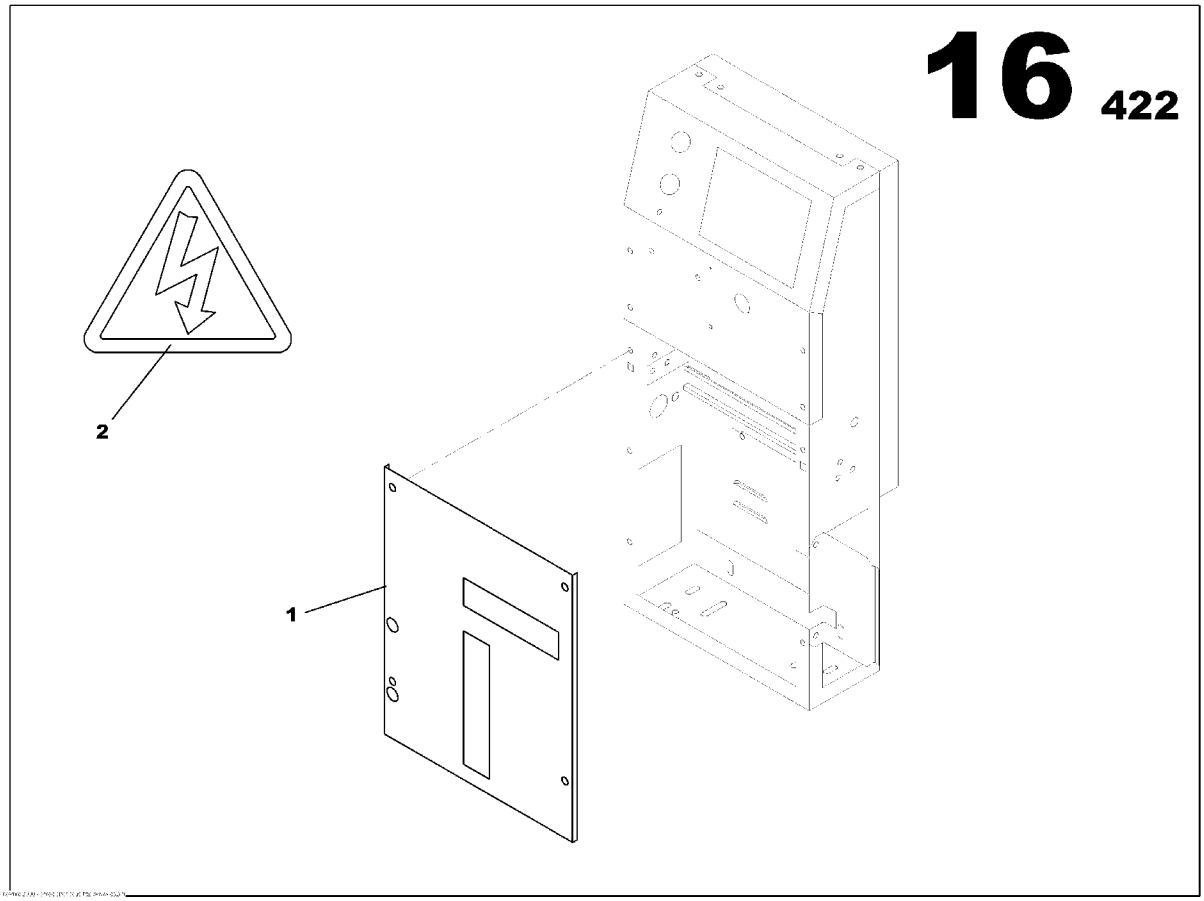

CIRCUIT BREAKER PROTECTION PANEL OPTION
85634780

Part numbers listed are only parts used in this model

Item	Part No.	Description	Qty	Un	From SN	To SN	Order PN	Page
1	85634723	CIRCUIT BREAKER CONTROL PANEL S2500 CONTROL PANEL	1	UN			85634723	
2	85409175	STICKER ELECTRIC DANGER SYMBOL	1	UN			85409175	

CONTROL PANEL FONCTION

Non illustré
Not illustrated

CONTROL PANEL FONCTION

Part numbers listed are only parts used in this model

Item	Part No.	Description	Qty	Un	From SN	To SN	Order PN	Page
1	85636280	STANDARD DASHBOARD M150 IR ASSEMBLY	1	UN			85636280	117
2	17130758	PGS REGLAGE OPTION	1	UN			17130758	

STANDARD DASHBOARD M150 IR ASSEMBLY

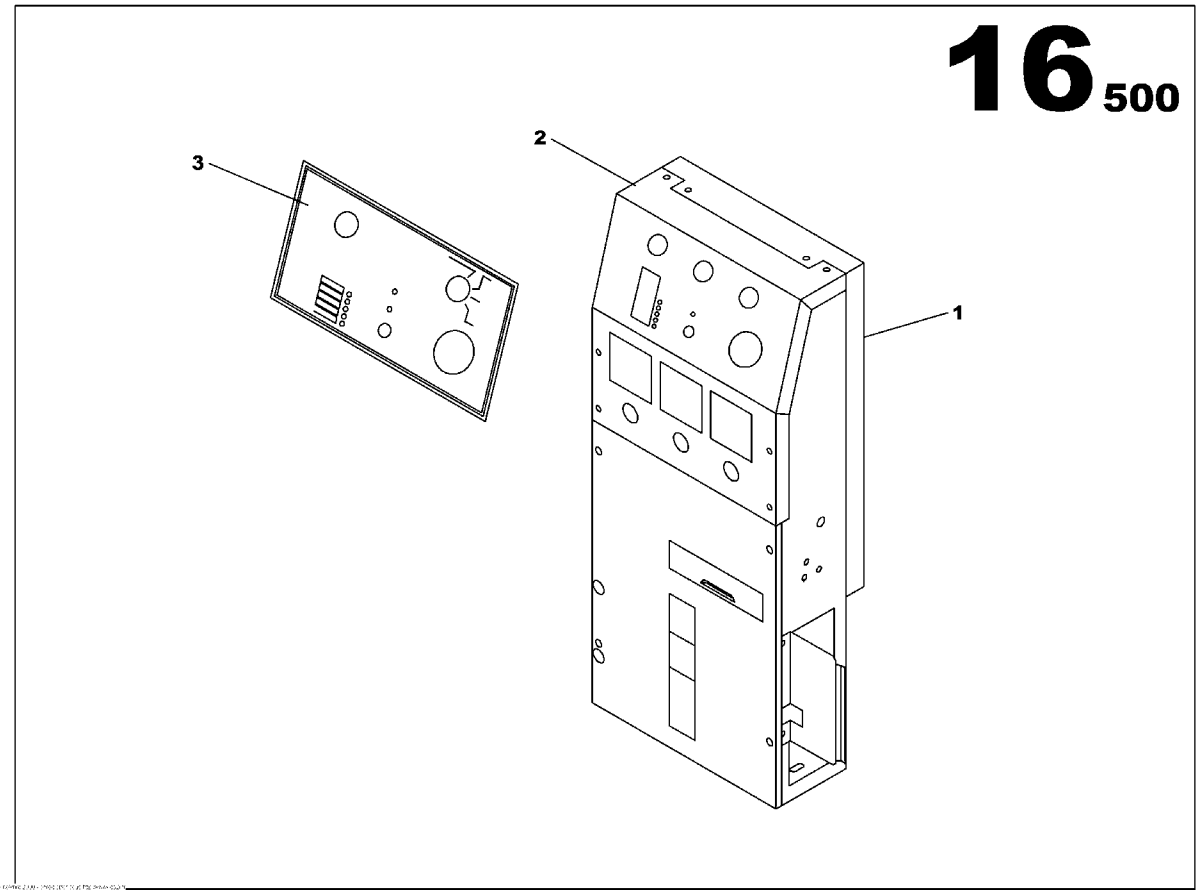

STANDARD DASHBOARD M150 IR ASSEMBLY
85636280

Part numbers listed are only parts used in this model

Item	Part No.	Description	Qty	Un	From SN	To SN	Order PN	Page
1	85634731	CONTROL PANEL SHEET METAL ASSEMBLY	1	UN			85634731	119
2	85636314	CONTROL PANEL ASSEMBLY	1	UN			85636314	121
3	85505634	PLASTIC PLATE L2450xh140	1	UN			85505634	

CONTROL PANEL SHEET METAL ASSEMBLY

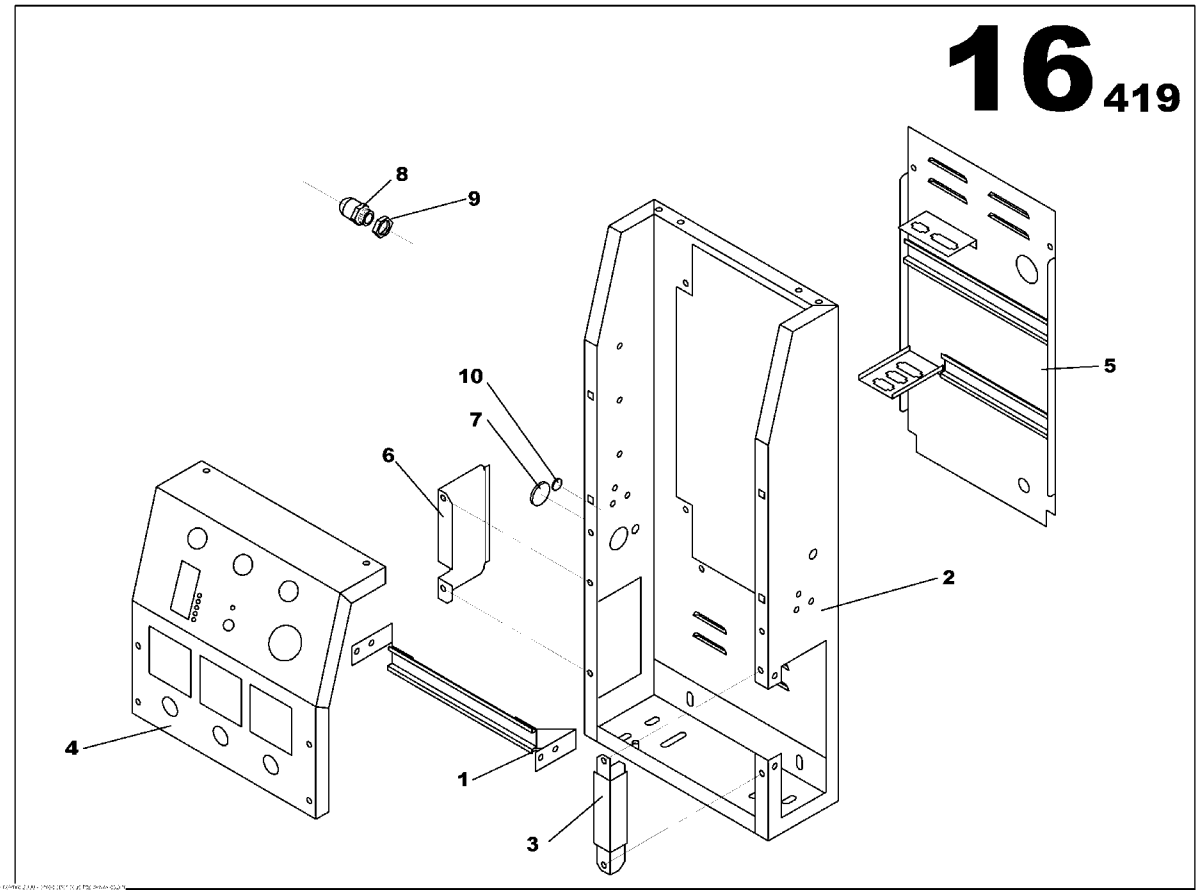

CONTROL PANEL SHEET METAL ASSEMBLY
85634731

Part numbers listed are only parts used in this model

Item	Part No.	Description	Qty	Un	From SN	To SN	Order PN	Page
1	85634632	ELECTRIC DIN RAIL	1	UN			85634632	
2	85634665	CONTROL PANEL S2500 HOUSING	1	UN			85634665	
3	85634699	SUPPORT PANEL S2500 CONTROL PANEL	1	UN			85634699	
4	85634707	CONTROL PANEL BRACKET	1	UN			85634707	
5	85634749	REAR CLOSURE PANEL M150 CONTROL PANEL	1	UN			85634749	
6	85635027	CABLE OUTLET PLATE	1	UN			85635027	
7	85408391	RUBBER GROMMET D47	2	UN			85408391	
8	85635894	GLAND NUT PG13	1	UN			85635894	
9	85635902	PG13 NUT	1	UN			85635902	
10	85636694	RUBBER GROMMET D15	1	UN			85636694	

CONTROL PANEL ASSEMBLY

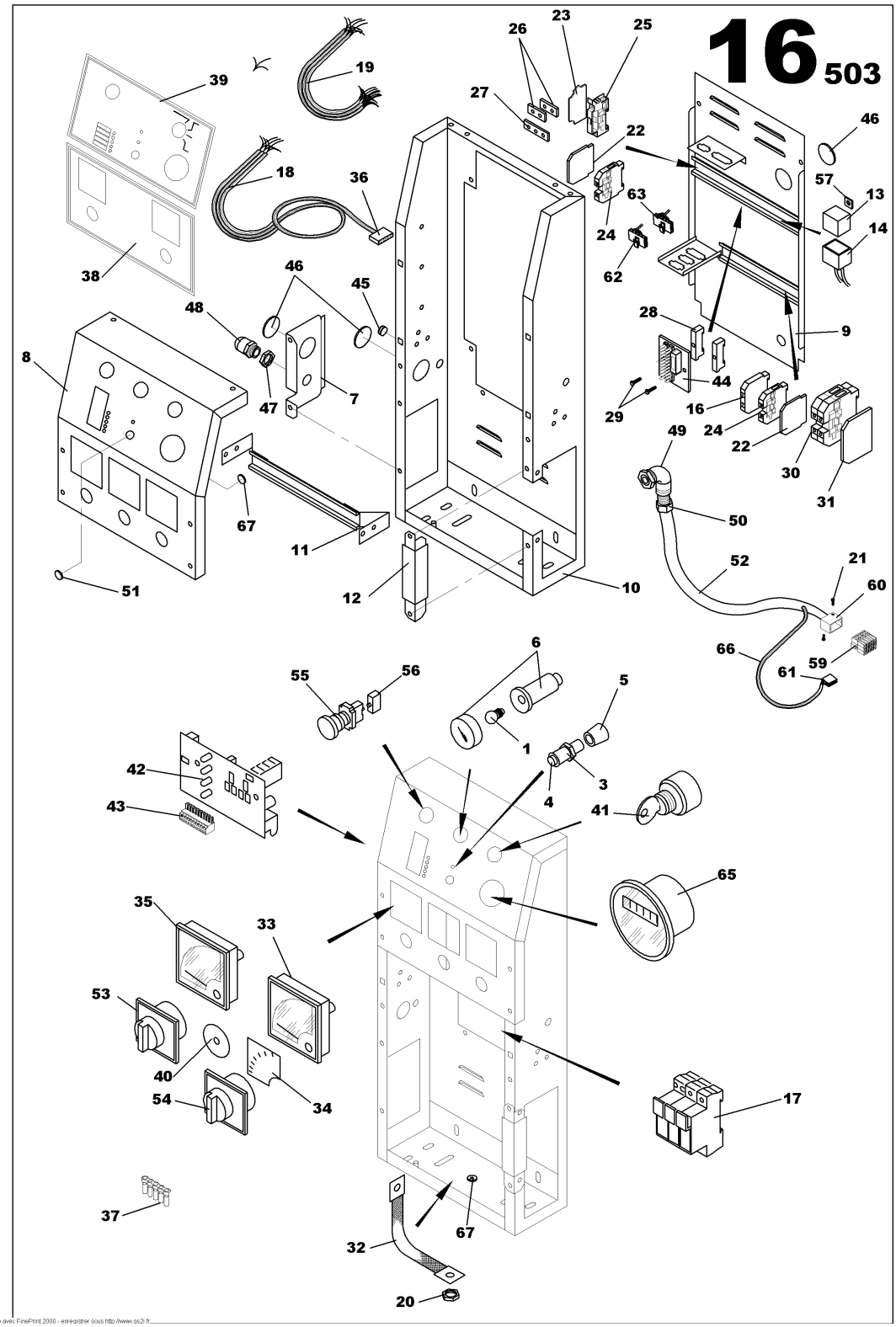

imprimé avec FinePrint 2000 - enregistrer sous http://www.qs2i.fr

CONTROL PANEL ASSEMBLY
85636314

Part numbers listed are only parts used in this model

Item	Part No.	Description	Qty	Un	From SN	To SN	Order PN	Page
1	17130923	LAMP	1	UN			17130923	
3	17130915	CONTACT PUSH BUTTON	1	UN			17130915	
4	17130907	BLACK PUSH BUTTON	1	UN			17130907	
5	17130931	HUB CAP CHROMIUM PLATES	1	UN			17130931	
6	85416527	PANEL LIGHT CYLINDRIC D22	1	UN			85416527	
7	85635027	CABLE OUTLET PLATE	1	UN			85635027	
8	85634707	CONTROL PANEL BRACKET	1	UN			85634707	
9	85634749	REAR CLOSURE PANEL M150 CONTROL PANEL	1	UN			85634749	
10	85634665	CONTROL PANEL S2500 HOUSING	1	UN			85634665	
11	85634632	ELECTRIC DIN RAIL	1	UN			85634632	
12	85634699	SUPPORT PANEL S2500 CONTROL PANEL	1	UN			85634699	
13	85408896	RELAY 12V 20/30A	1	UN			85408896	
14	85408912	AUTOMOBILE RELAY BASE	1	UN			85408912	
15	17130949	SPACER	2	UN			17130949	
16	17130956	STOP	1	UN			17130956	
17	85415503	FUSE HOUSING 10.5x38	1	UN			85415503	
18	17130964	STRAND	1	UN			17130964	
19	17130972	STRAND	1	UN			17130972	
20	17130766	NUT M6	2	UN			17130766	
21	17130980	SCREW	2	UN			17130980	
22	17130998	PLASTIC COVER	3	UN			17130998	
23	17130881	PLASTIC COVER	1	UN			17130881	
24	85505691	TERMINAL CONNECTION	9	UN			85505691	
25	17131004	TERMINAL CONNECTION	8	UN			17131004	
26	17131012	TERMINAL JUNCTION	2	UN			17131012	
27	17131020	TERMINAL JUNCTION	1	UN			17131020	
28	85408854	STOP	2	UN			85408854	
29	17131038	SCREW	2	UN			17131038	

CONTROL PANEL ASSEMBLY

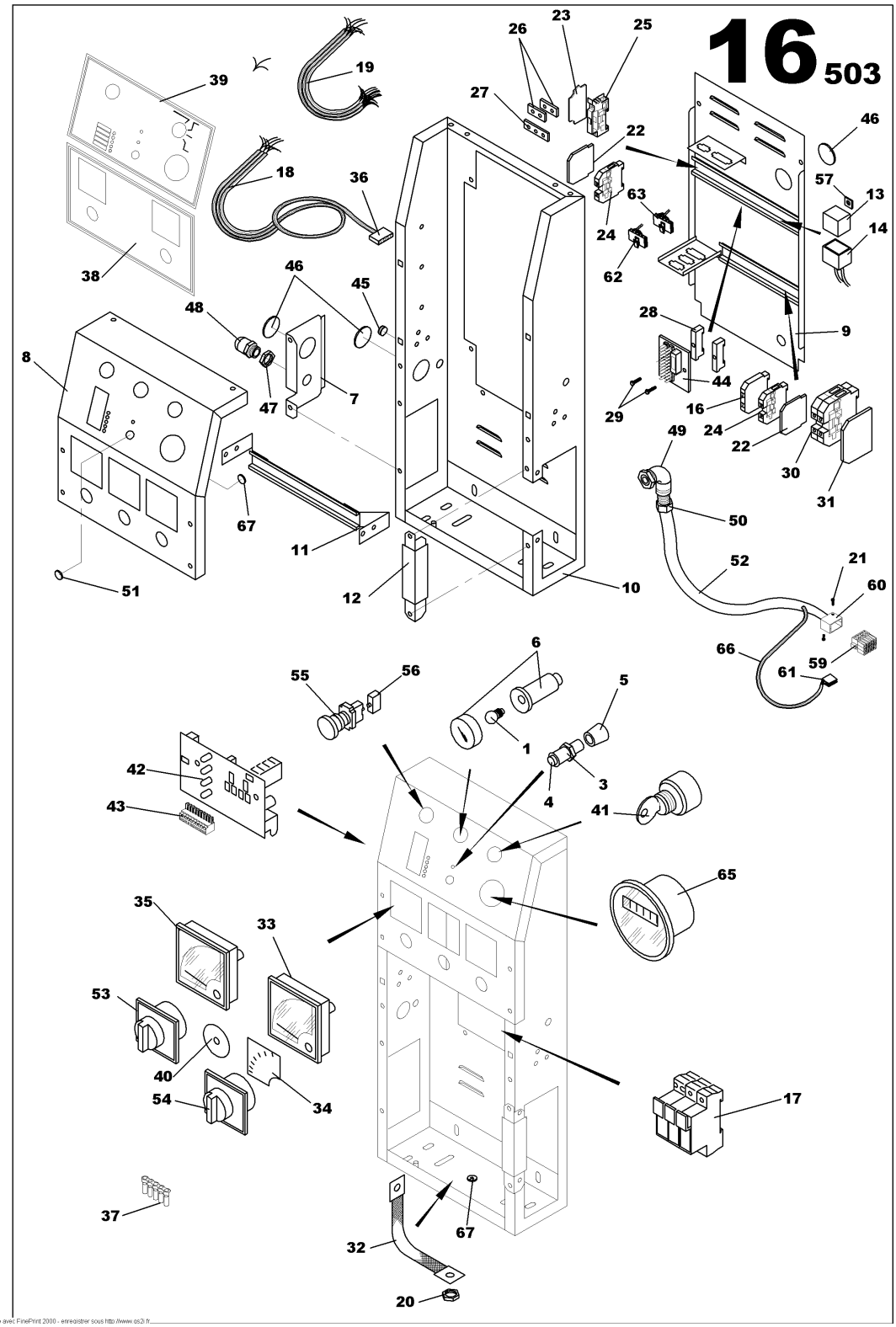

CONTROL PANEL ASSEMBLY
85636314

Part numbers listed are only parts used in this model

Item	Part No.	Description	Qty	Un	From SN	To SN	Order PN	Page
30	17131046	TERMINAL CONNECTION BLOCK	2	UN			17131046	
31	85413466	PLASTIC COVER TERMINAL BLOCK	1	UN			85413466	
32	85505543	GROUND WIRES 16mm2	1	UN			85505543	
33	85402477	AMMETER WITH NEEDLE 72x72	1	UN			85402477	
34	85413250	AMPERMETRIC SCALE	1	UN			85413250	
35	85416519	VOLTMETER 0/500V	1	UN			85416519	
36	17131053	5 POINTS APPLIANCE CONNECTOR	1	UN			17131053	
37	17131061	CONTACT	5	UN			17131061	
38	85413797	PLASTIC PLATE L235xh245	1	UN			85413797	
39	85505634	PLASTIC PLATE L2450xh140	1	UN			85505634	
40	85505717	STICKER VOLTAGE ADJUST	1	UN			85505717	
41	85402543	KEY COBO ASSEMBLY	1	UN			85402543	127
42	85402527	CARD PGS	1	UN			85402527	
43	17130899	APPLIANCE CONNECTOR	1	UN			17130899	
44	85627222	CARD CDF	1	UN			85627222	129
45	17131079	CAP	1	UN			17131079	
46	85408391	RUBBER GROMMET D47	3	UN			85408391	
47	85635902	PG13 NUT	1	UN			85635902	
48	85635894	GLAND NUT PG13	1	UN			85635894	
49	17131087	PIPE UNION	1	UN			17131087	
50	85408664	GLAND NUT SCREW PG16	1	UN			85408664	
51	17131095	OBTURATOR	1	UN			17131095	
52	17131137	ELECTRICAL SHAFT D16	1	ML			17131137	
53	85412955	VOLTMETER SELECTOR SWITCH	1	UN			85412955	
54	85412930	AMMETER SELECTOR SWITCH	1	UN			85412930	
55	85631422	EMERGENCY STOP BUTTON	1	UN			85631422	
56	85632362	AUXILARY CONTACT NO	1	UN			85632362	
57	17131111	CLIP	1	UN			17131111	

CONTROL PANEL ASSEMBLY

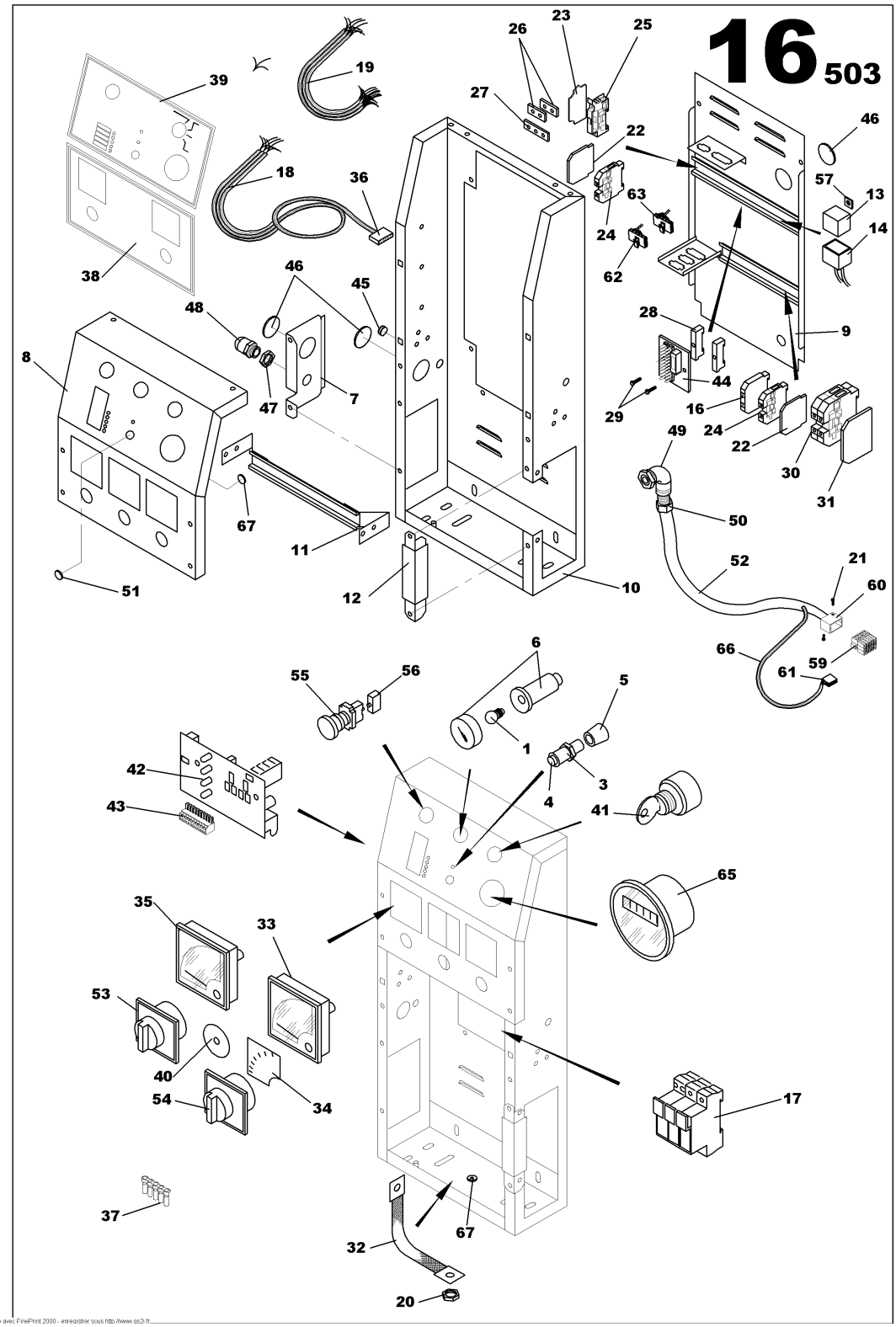

CONTROL PANEL ASSEMBLY
85636314

Part numbers listed are only parts used in this model

Item	Part No.	Description	Qty	Un	From SN	To SN	Order PN	Page
58	17131152	SCREW CHC M4	1	UN			17131152	
59	85413052	CONNECTOR 15 POLE MALE	1	UN			85413052	
60	17130592	COVER	2	UN			17130592	
61	17130550	2 POINTS APPLIANCE CONNECTOR	1	UN			17130550	
62	17130568	4 POINTS APPLIANCE CONNECTOR	1	UN			17130568	
63	17130584	FEMALE BLOCK	1	UN			17130584	
64	17131103	CLIP	18	UN			17131103	
65	85412971	HOUR METER	1	UN			85412971	
66	85635183	INTELLISYSTM WIRING LOOM 010-BAT	1	UN			85635183	
67	17131145	EARTH STICKER	2	UN			17131145	

KEY COBO ASSEMBLY

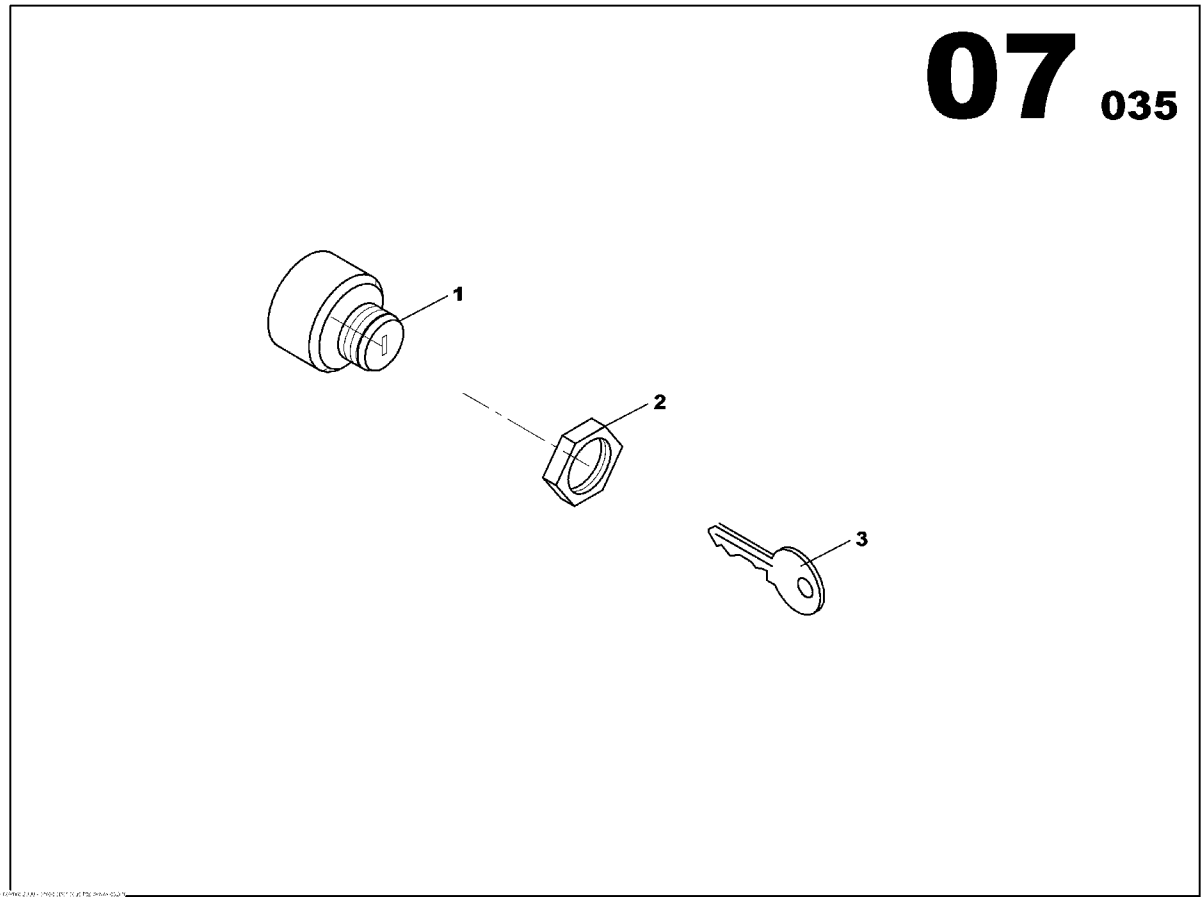

KEY COBO ASSEMBLY
85402543

Part numbers listed are only parts used in this model

Item	Part No.	Description	Qty	Un	From SN	To SN	Order PN	Page
1	85412948	KEY SELECTOR SWITCH	1	UN			85412948	
2	85413268	SWITCH NUT	1	UN			85413268	
3	85412872	KEY SWITCH	2	UN			85412872	

CARD CDF

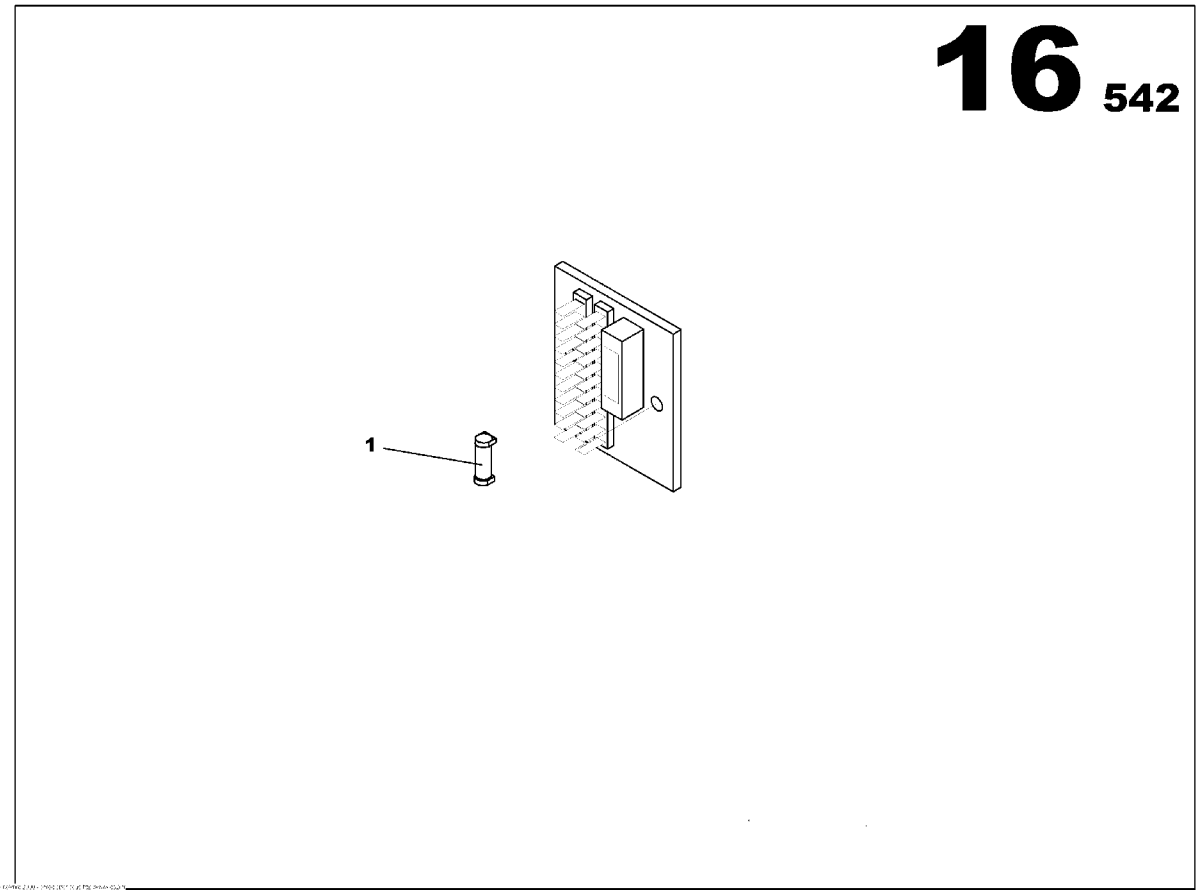

CARD CDF
85627222

Part numbers listed are only parts used in this model

Item	Part No.	Description	Qty	Un	From SN	To SN	Order PN	Page
1	85426120	FUSE CYLINDRICAL 10A	1	UN			85426120	

ELECTRIC SUPPLY FUNCTION

Non illustré
Not illustrated

ELECTRIC SUPPLY FUNCTION

Part numbers listed are only parts used in this model

Item	Part No.	Description	Qty	Un	From SN	To SN	Order PN	Page
1	85634863	POWER TERMINAL CONNECTIONS 50A ASSEMBLY	1	UN			85634863	133
2	85634962	ELECTRIC CONNECTION 50A ASSEMBLY	1	UN			85634962	137
3	85635662	STANDARD OPTION MCPS ASSEMBLY M150	1	UN			85635662	139
4	85635761	RELEASE COIL	1	UN			85635761	141

POWER TERMINAL CONNECTIONS 50A ASSEMBLY

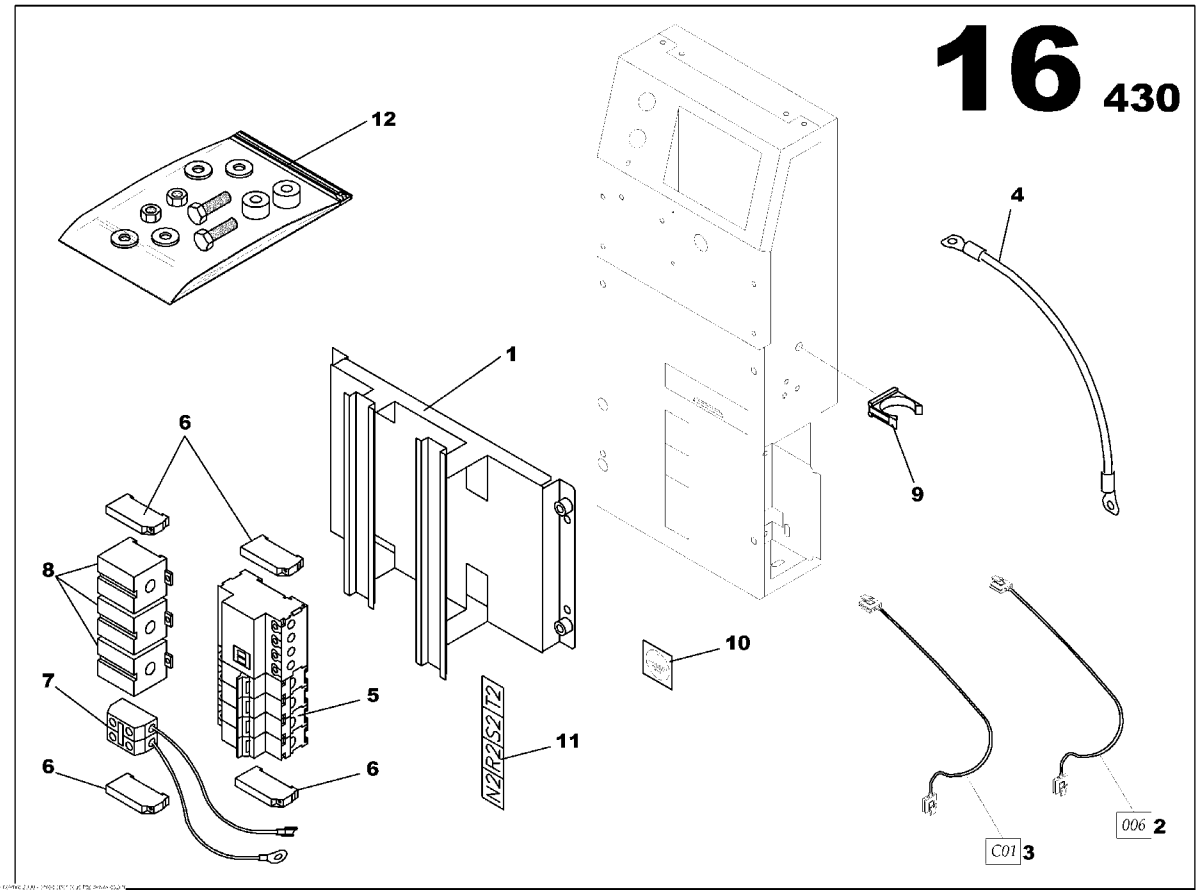

POWER TERMINAL CONNECTIONS 50A ASSEMBLY
85634863

Part numbers listed are only parts used in this model

Item	Part No.	Description	Qty	Un	From SN	To SN	Order PN	Page
1	85635019	CONTROL PANEL S2500 CIRCUIT BREAKER BRACKET	1	UN			85635019	
2	85635373	INTELLISYSTM WIRING LOOM 006	1	UN			85635373	
3	85635456	INTELLISYSTM WIRING LOOM 001	1	UN			85635456	
4	85635589	NEUTRAL/EARTH SYSTEM CABLE 16mm2 L150	1	UN			85635589	
5	85413193	MOULDED CASE CIRCUIT BREAKER 4x50A	1	UN			85413193	
6	85408706	STOP	4	UN			85408706	
7	85635944	TERMINAL JUNCTION	1	UN			85635944	
8	85632792	CURRENT TRANSFORMER 60/5	3	UN			85632792	
9	85636033	SHAFT BRACKET	1	UN			85636033	
10	85409084	STICKER EARTH SYMBOL	1	UN			85409084	
11	85409092	STICKER POWER LINK	1	UN			85409092	
12	85636439	SCREWS ASSEMBLY	1	UN			85636439	135

SCREWS ASSEMBLY

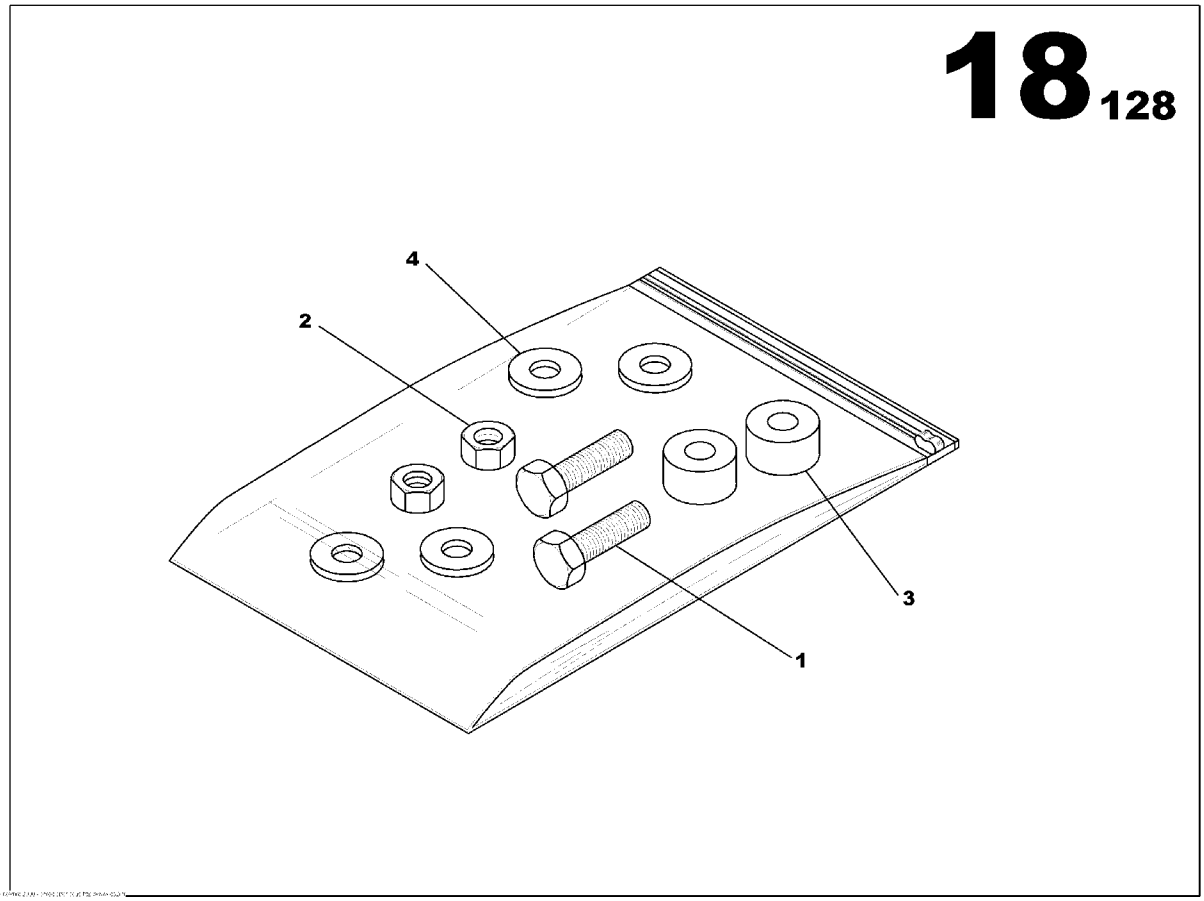

SCREWS ASSEMBLY
85636439

Part numbers listed are only parts used in this model

Item	Part No.	Description	Qty	Un	From SN	To SN	Order PN	Page
1	85636330	SCREW H M6x12	2	UN			85636330	
2	85507911	NUT M6	2	UN			85507911	
3	85636652	SPACER	2	UN			85636652	
4	85636744	WASHER 6x18	4	UN			85636744	

ELECTRIC CONNECTION 50A ASSEMBLY

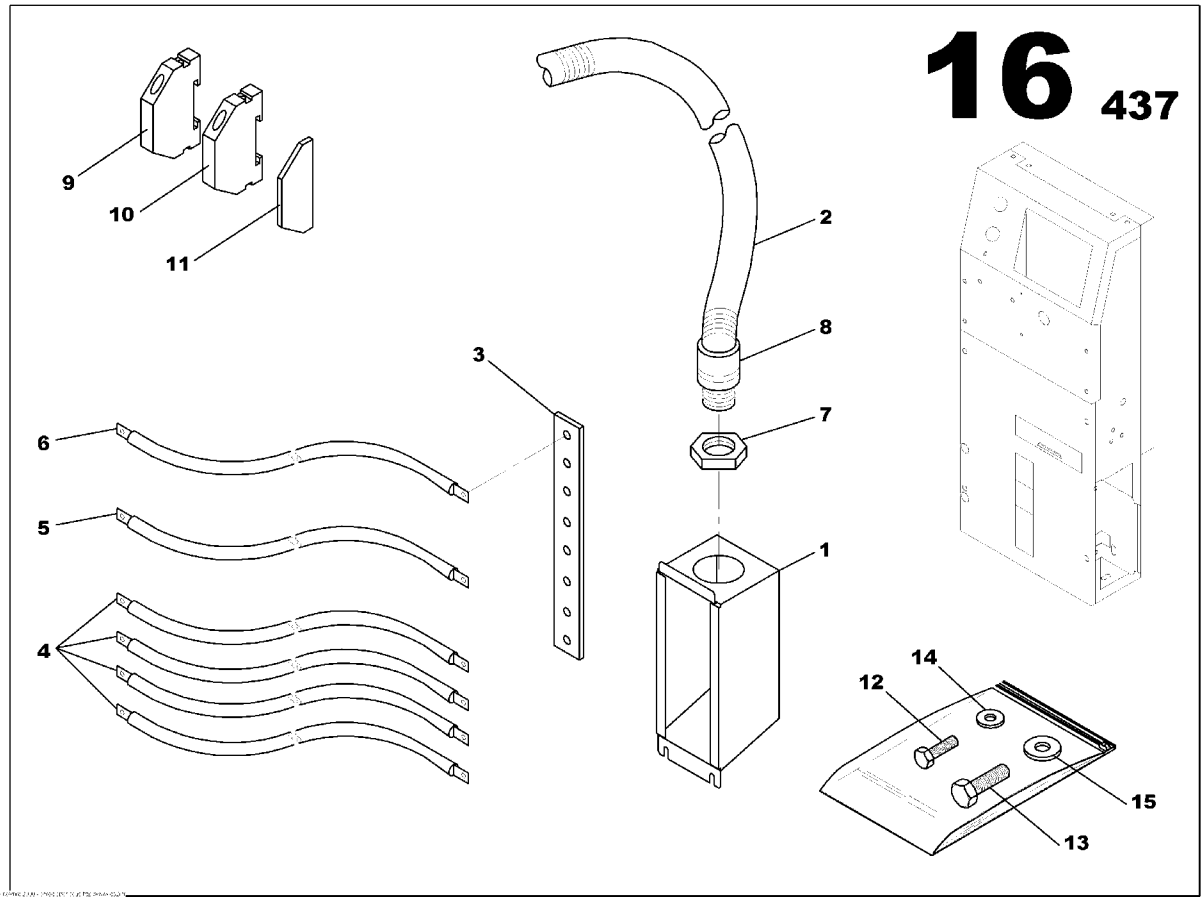

ELECTRIC CONNECTION 50A ASSEMBLY
85634962

Part numbers listed are only parts used in this model

Item	Part No.	Description	Qty	Un	From SN	To SN	Order PN	Page
1	85635035	CONNECTION HOUSING	1	UN			85635035	
2	85499440	ELECTRICAL SHAFT D36	0.75	ML			85499440	
3	85635423	COPPER BAR 5x25	1	UN			85635423	
4	85635498	POWER CABLE 50A 10mm2 L1600	4	UN			85635498	
5	85635548	EARTHING CABLE 16mm2 L1600	1	UN			85635548	
6	85635563	NEUTRAL/EARTH SYSTEM CABLE 16mm2 L400 Gr/Ye	1	UN			85635563	
7	85408680	GLAND NUT SCREW PG36	1	UN			85408680	
8	85501575	PIPE UNION PG36	1	UN			85501575	
9	85635951	TERMINAL BLOCK	1	UN			85635951	
10	85635969	TERMINAL BLOCK	1	UN			85635969	
11	85635993	PLASTIC COVER TERMINAL BLOCK	1	UN			85635993	
12	85636348	SCREW H M6x10	3	UN			85636348	
13	85636710	SCREW H M8x12	2	UN			85636710	
14	85636736	WASHER 6x12	3	UN			85636736	
15	85636751	WASHER 8x16	2	UN			85636751	

STANDARD OPTION MCPS ASSEMBLY M150

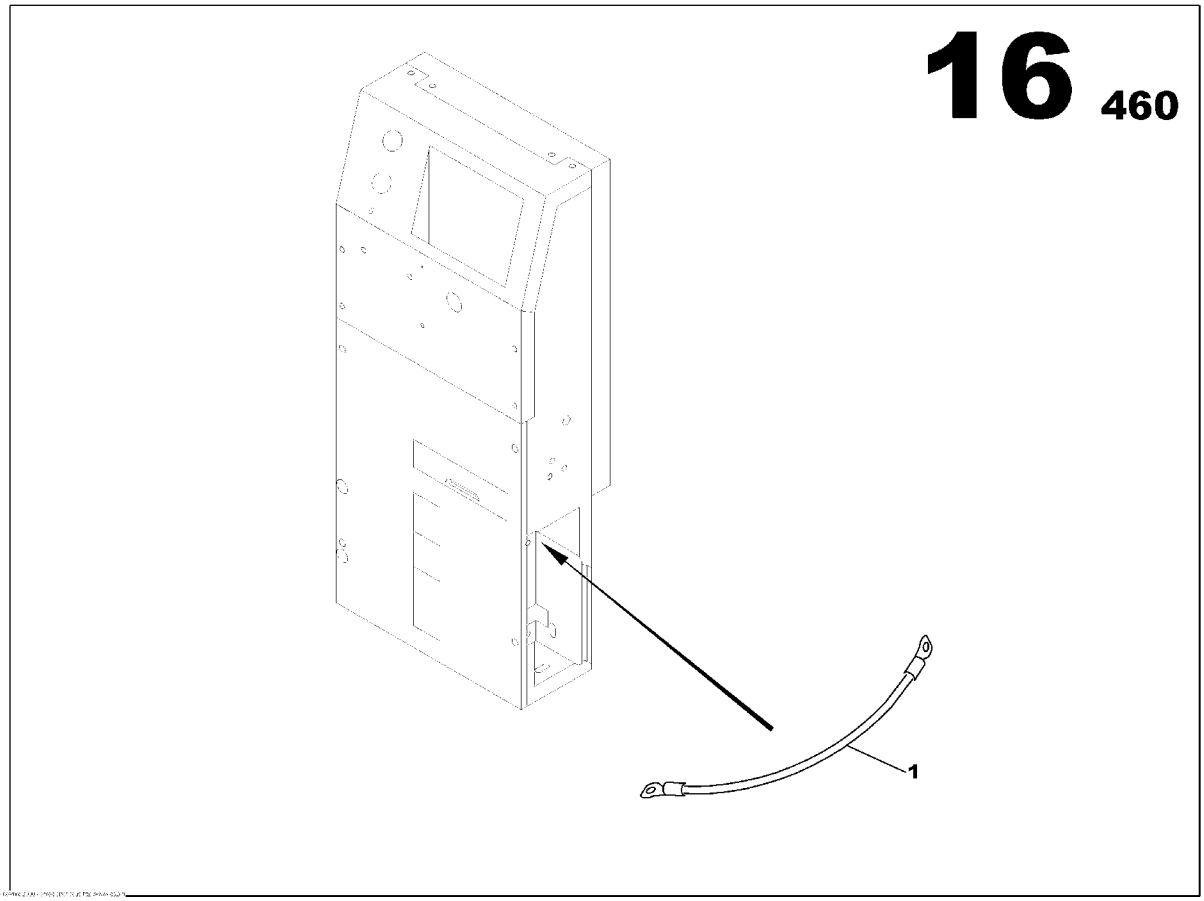

STANDARD OPTION MCPS ASSEMBLY M150
85635662

Part numbers listed are only parts used in this model

Item	Part No.	Description	Qty	Un	From SN	To SN	Order PN	Page
1	85635654	EARTH CABLE	1	UN			85635654	

RELEASE COIL

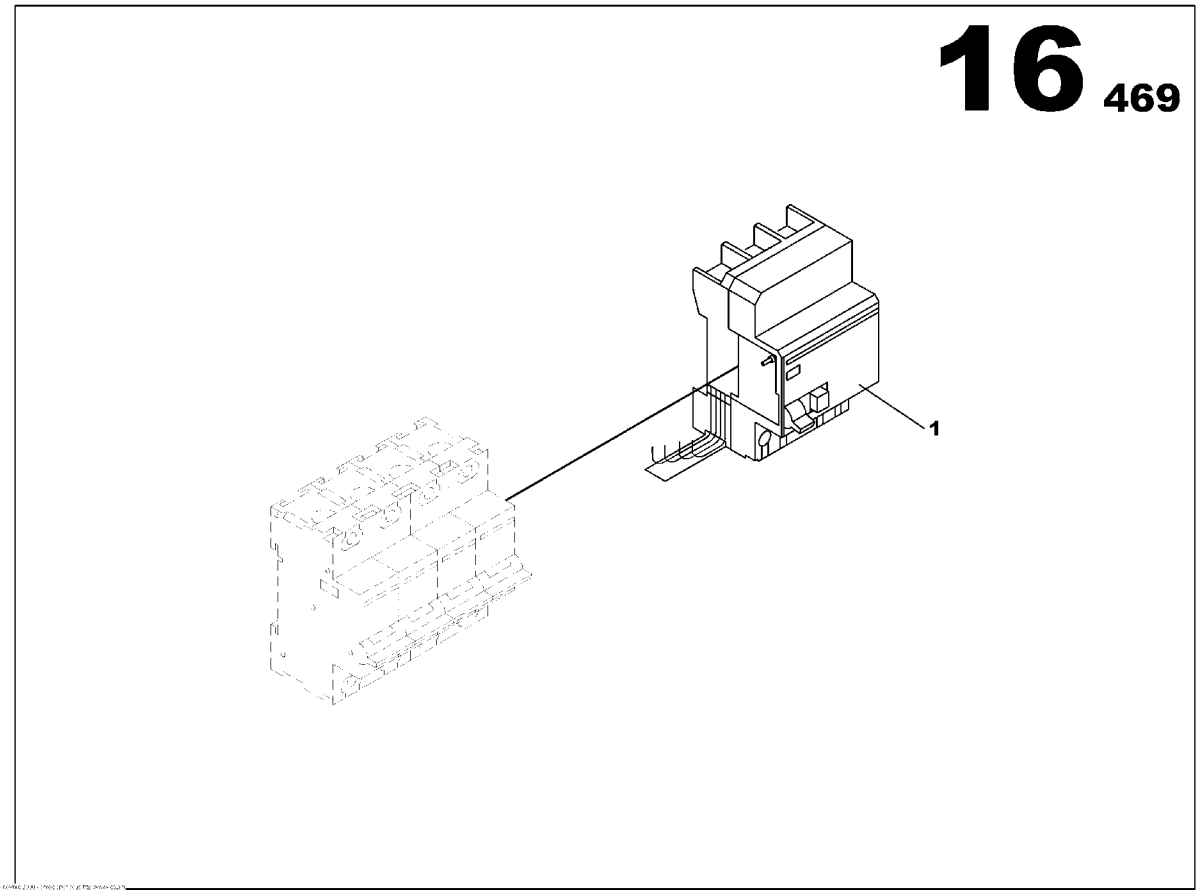

RELEASE COIL
85635761

Part numbers listed are only parts used in this model

Item	Part No.	Description	Qty	Un	From SN	To SN	Order PN	Page
1	85408557	EARTH LEAKAGE 30mA 240/415V	1	UN			85408557	

POWER CONNECTION BLOCK FUNCTION

Non illustré
Not illustrated

POWER CONNECTION BLOCK FUNCTION

Part numbers listed are only parts used in this model

Item	Part No.	Description	Qty	Un	From SN	To SN	Order PN	Page
1	85621175	TERMINAL M107 ASSEMBLY	1	UN			85621175	145

TERMINAL M107 ASSEMBLY

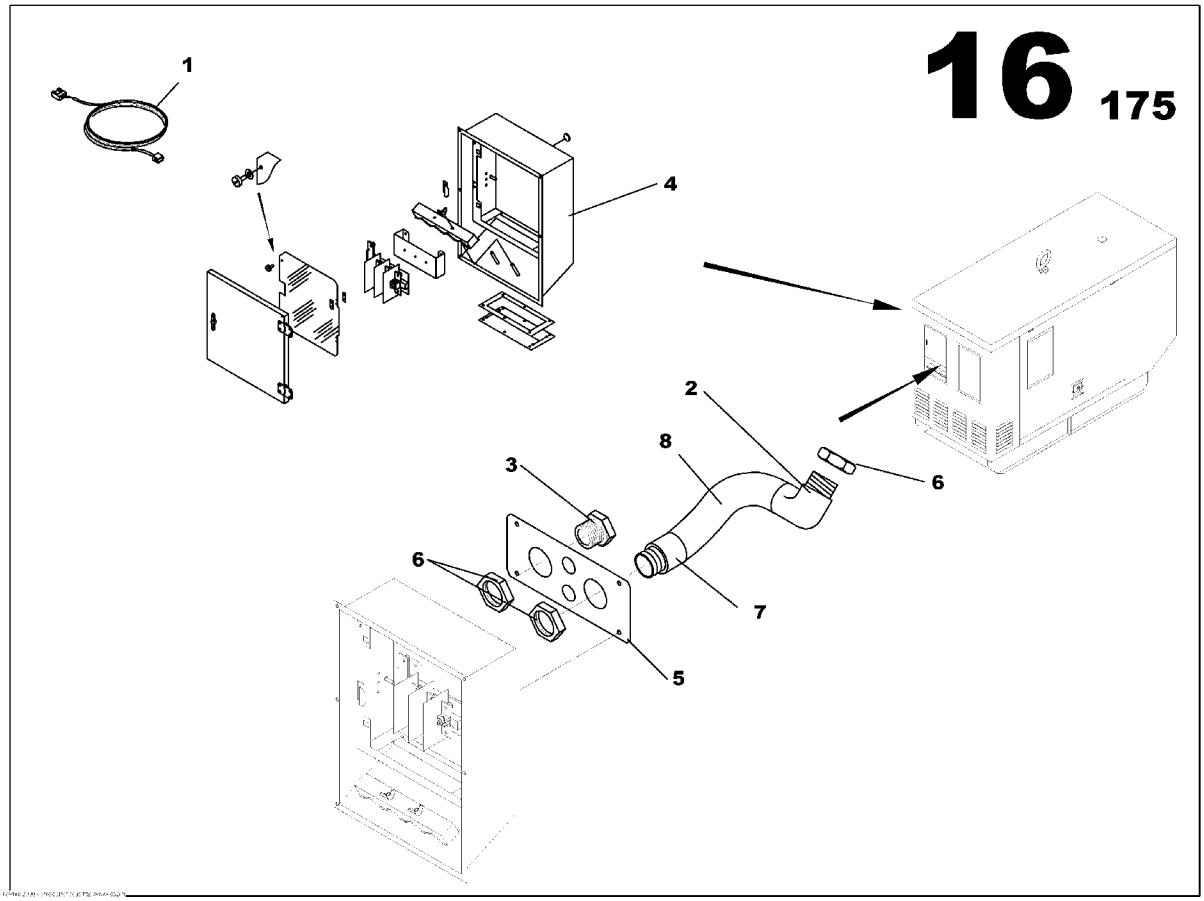

TERMINAL M107 ASSEMBLY
85621175

Part numbers listed are only parts used in this model

Item	Part No.	Description	Qty	Un	From SN	To SN	Order PN	Page
1	17130618	WIRING LOOM CONNECTIONS BLOCK	1	UN			17130618	
2	85499689	PIPE UNION ELBOW 90° PG36	1	UN			85499689	
3	85621233	PLUG ELECTRIC D36	1	UN			85621233	
4	85414829	MCPS CONNECTION ASSEMBLY	1	UN			85414829	147
5	85499150	GLAND NUT PLATE TERMINAL CONNECTION M107	1	UN			85499150	
6	85408680	GLAND NUT SCREW PG36	3	UN			85408680	
7	85501575	PIPE UNION PG36	1	UN			85501575	
8	85499440	ELECTRICAL SHAFT D36	0.9	ML			85499440	

MCPS CONNECTION ASSEMBLY

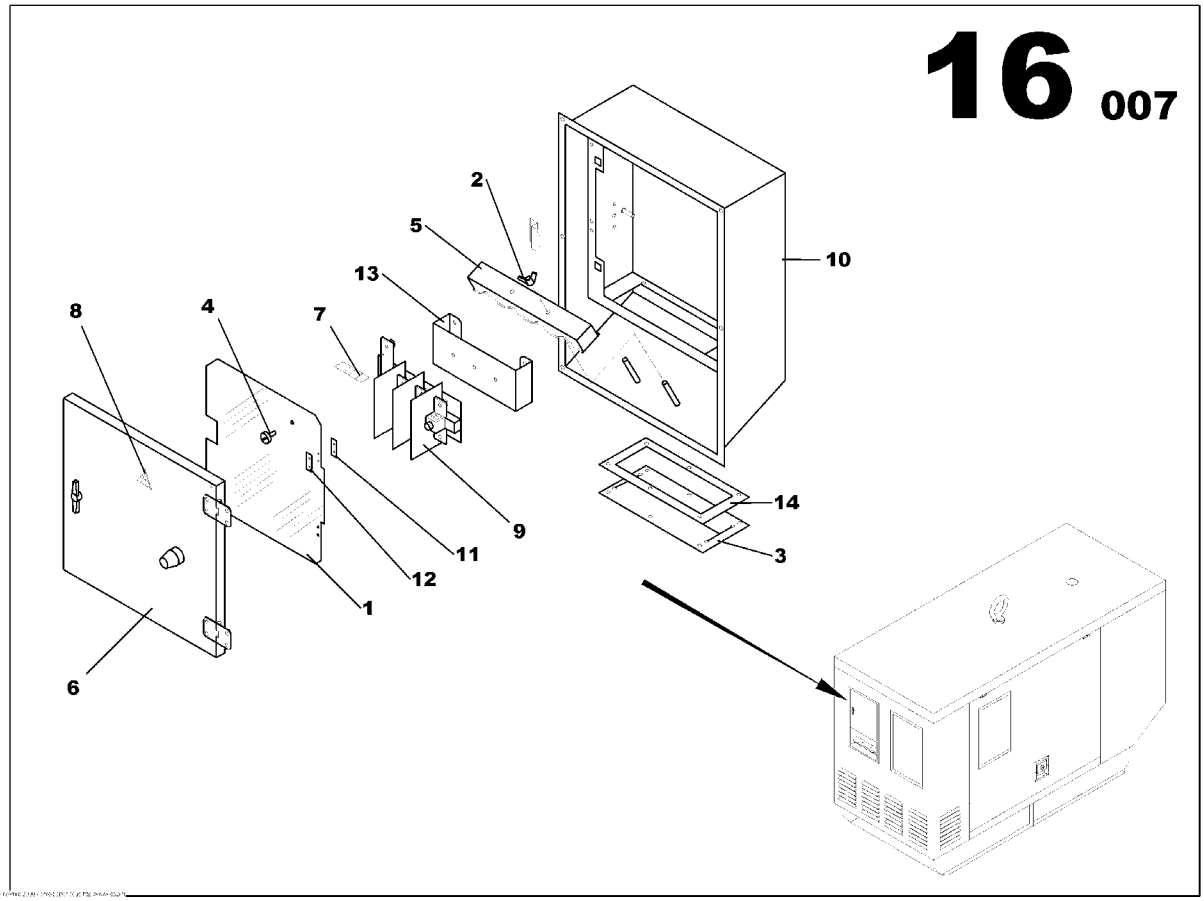

MCPS CONNECTION ASSEMBLY
85414829

Part numbers listed are only parts used in this model

Item	Part No.	Description	Qty	Un	From SN	To SN	Order PN	Page
1	85415545	TERMINAL CONNECTION DOOR M107	1	UN			85415545	
2	85410140	WING NUT M8	2	UN			85410140	
3	85412534	CABLE OUTPUT RUBBER SCREEN	1	UN			85412534	
4	85409217	SLAM SHUT ASSEMBLY	1	UN			85409217	155
5	85416030	FUEL FILTER BRACKET	1	UN			85416030	
6	85414860	PANEL DOOR M107 ASSEMBLY	1	UN			85414860	149
7	85409126	STICKER POWER LINK	1	UN			85409126	
8	85409084	STICKER EARTH SYMBOL	1	UN			85409084	
9	17130683	POWER CONNECTION BLOCK	1	UN			17130683	
10	85416048	MCPS BRACKET	1	UN			85416048	
11	85407708	HINGE FIXING PLATE M214	2	UN			85407708	
12	85407690	DOOR SHIM ASSEMBLY	2	UN			85407690	
13	85415933	TERMINAL BRACKET	1	UN			85415933	
14	85415982	WIRE BIB OUTPUT BRACKET	1	UN			85415982	

PANEL DOOR M107 ASSEMBLY

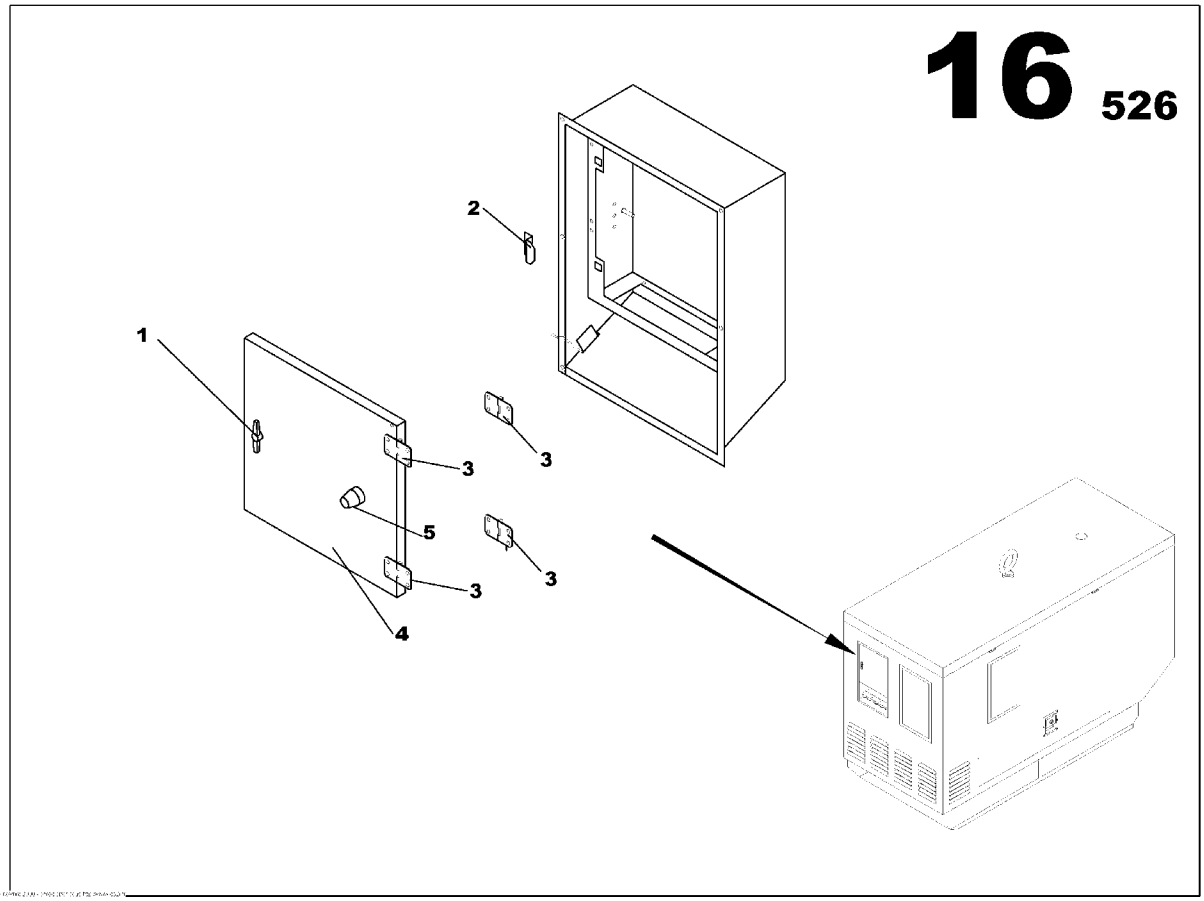

PANEL DOOR M107 ASSEMBLY
85414860

Part numbers listed are only parts used in this model

Item	Part No.	Description	Qty	Un	From SN	To SN	Order PN	Page
1	85402907	SLAM SHUT ASSEMBLY	1	UN			85402907	151
2	85407682	STRIKER PLATE CANOPY MCPS DOOR	1	UN			85407682	
3	85406130	DOOR HINGE	4	UN			85406130	
4	85415537	TERMINAL CONNECTION DOOR M107	1	UN			85415537	
5	85406189	ANTI-VIBRATION MOUNT 140daN 15mm	1	UN			85406189	

SLAM SHUT ASSEMBLY

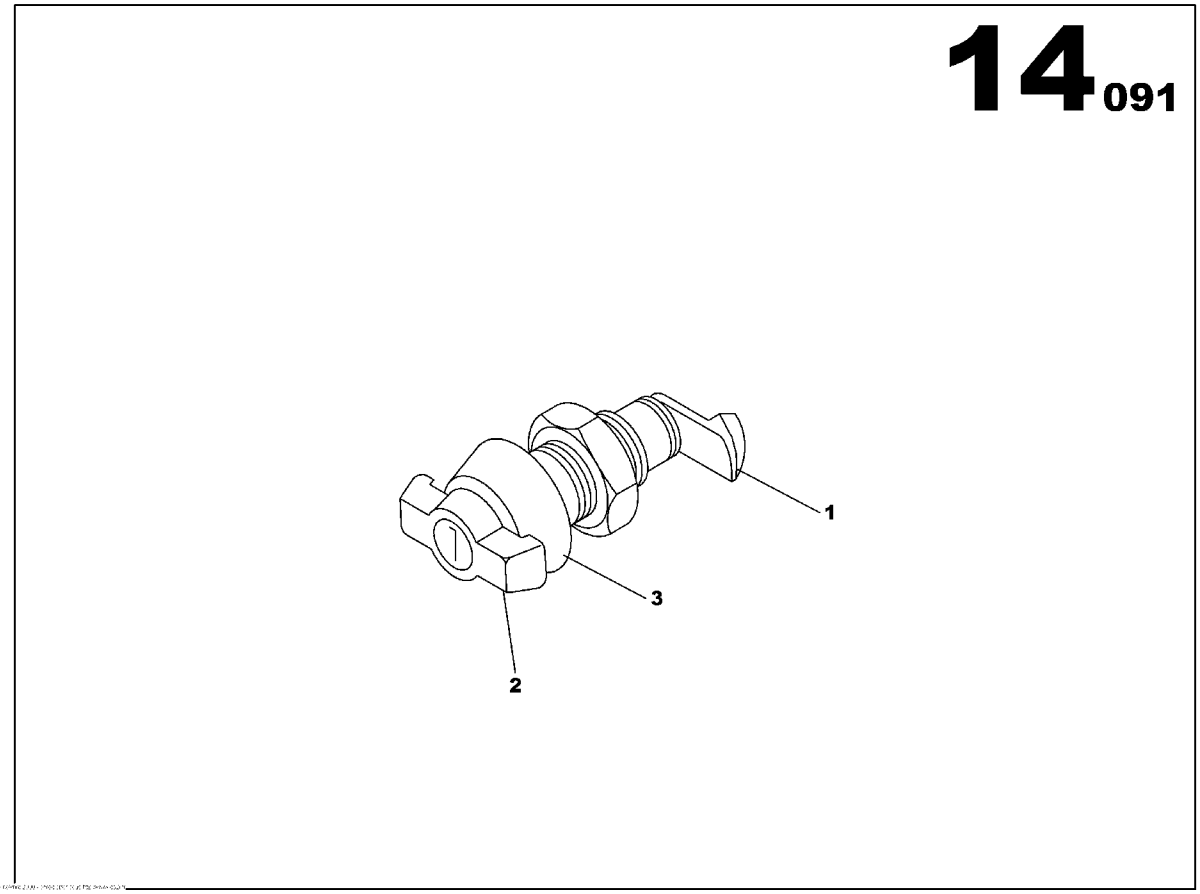

SLAM SHUT ASSEMBLY
85402907

Part numbers listed are only parts used in this model

Item	Part No.	Description	Qty	Un	From SN	To SN	Order PN	Page
1	85406221	SLAM SHUT DOOR LATCH	1	UN			85406221	
2	85406239	SLAM SHUT LATCH HANDLE	1	UN			85406239	153
3	85406247	SLAM SHUT FASTENER	1	UN			85406247	

SLAM SHUT LATCH HANDLE

Non illustré
Not illustrated

SLAM SHUT LATCH HANDLE
85406239

Part numbers listed are only parts used in this model

Item	Part No.	Description	Qty	Un	From SN	To SN	Order PN	Page
1	85632883	WBH LATCHE KEY	1	UN			85632883	

SLAM SHUT ASSEMBLY

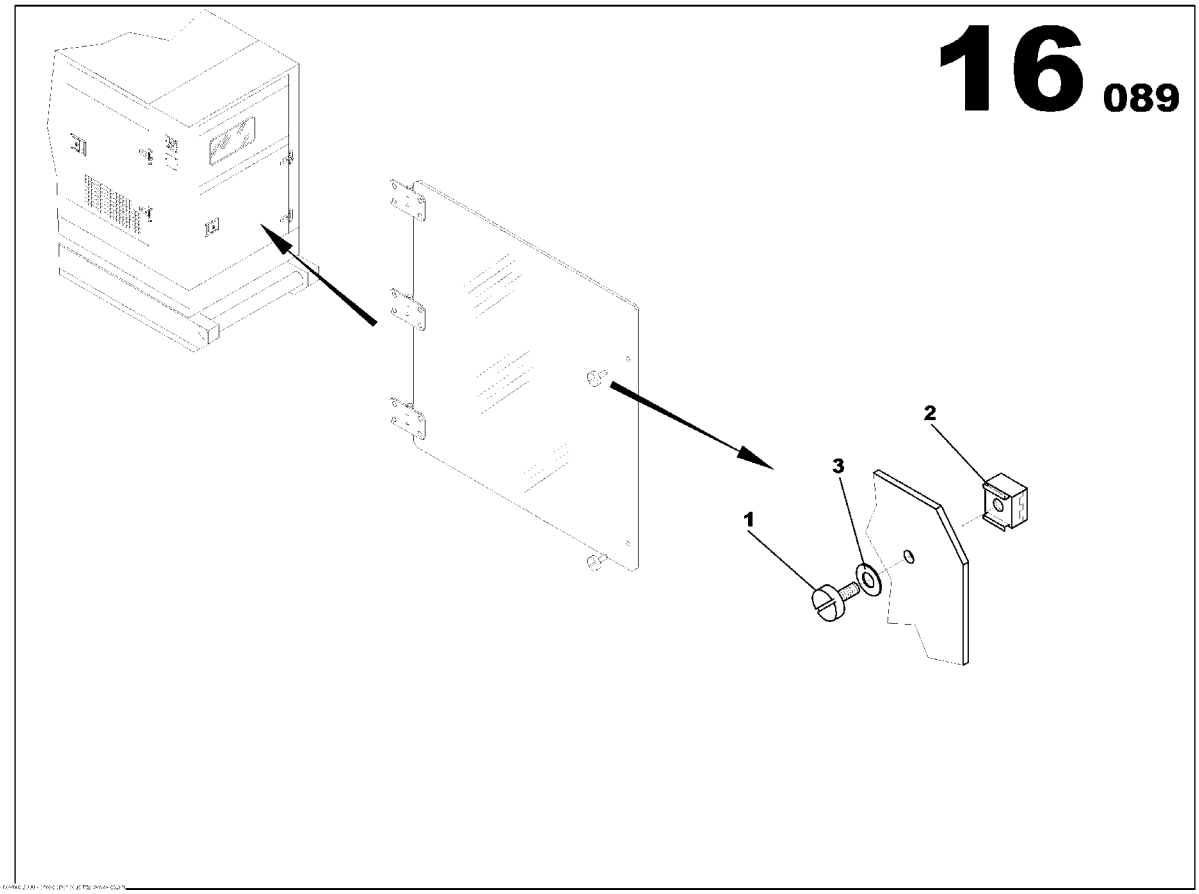

SLAM SHUT ASSEMBLY
85409217

Part numbers listed are only parts used in this model

Item	Part No.	Description	Qty	Un	From SN	To SN	Order PN	Page
1	85409225	1/4 TURN SCREW D9 *-Order 31801021601NE*	2	UN			85409225	
2	85409233	CAPTIVE NUT FOR 1/4 TURN BOLT *-Order 31801021601NE*	2	UN			85409233	
3	85409241	WASHER FOR 1/4 TURN FASTENER *-Order 31801021601NE*	2	UN			85409241	

DOCUMENTATION OPTION

Non illustré
Not illustrated

DOCUMENTATION OPTION

Part numbers listed are only parts used in this model

Item	Part No.	Description	Qty	Un	From SN	To SN	Order PN	Page

BASE INTELISYS OPTION

Non illustré
Not illustrated

BASE INTELISYS OPTION

Part numbers listed are only parts used in this model

Item	Part No.	Description	Qty	Un	From SN	To SN	Order PN	Page
1	85635225	TELYS 010 WIRING LOOM ASSEMBLY JD 6081	1	UN			85635225	161
2	85635340	ELECTRICAL SHAFT	1	UN			85635340	
3	85634616	EMERGENCY STOP PANEL ASSEMBLY	1	UN			85634616	163
4	85639599	DECALS TERMINAL BLOCK ASSEMBLY	1	UN			85639599	167
5	85411551	INTELLISYSTM OPTION CB CARD	1	UN			85411551	169
6	85636272	S2500 DASHBOARD OPTION	1	UN			85636272	175
7	17130741	INTELLISYSTM PARAMETER OPTION	1	UN			17130741	
8	85635415	TELYS 035 WIRING LOOM ASSEMBLY JD 6081	1	UN			85635415	185

TELYS 010 WIRING LOOM ASSEMBLY JD 6081

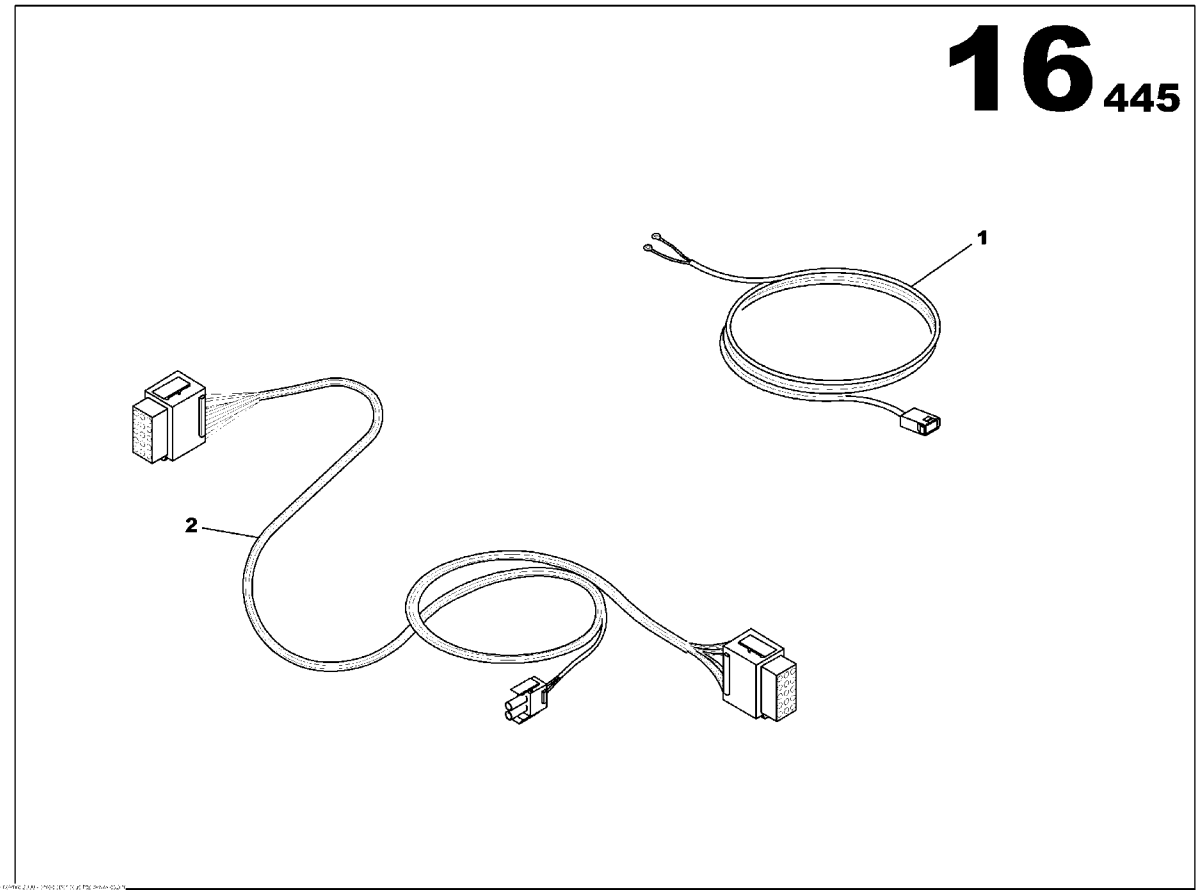

TELYS 010 WIRING LOOM ASSEMBLY JD 6081
85635225

Part numbers listed are only parts used in this model

Item	Part No.	Description	Qty	Un	From SN	To SN	Order PN	Page
1	85635183	INTELLISYSTM WIRING LOOM 010-BAT	1	UN			85635183	
2	85635209	INTELLISYSTM WIRING LOOM 010	1	UN			85635209	

EMERGENCY STOP PANEL ASSEMBLY

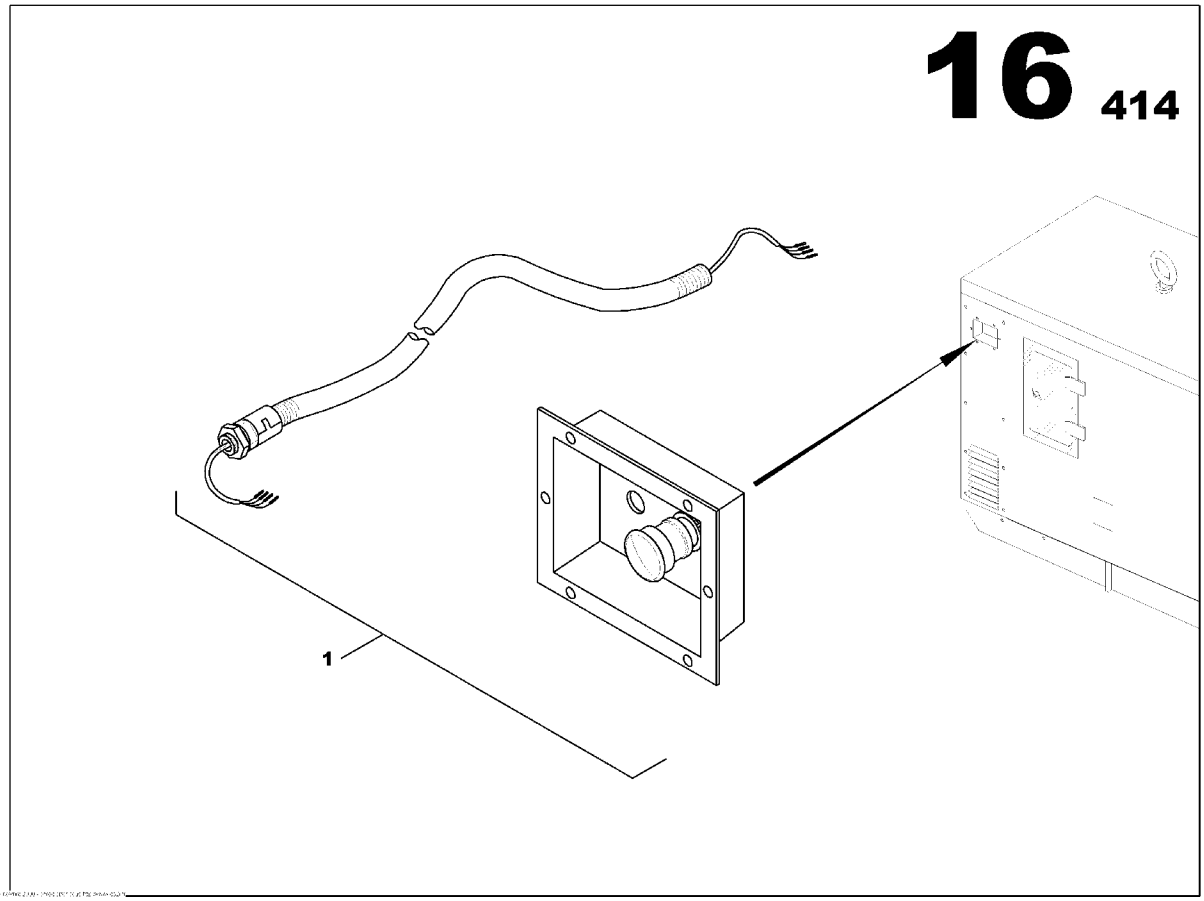

EMERGENCY STOP PANEL ASSEMBLY
85634616

Part numbers listed are only parts used in this model

Item	Part No.	Description	Qty	Un	From SN	To SN	Order PN	Page
1	85634624	EMERGENCY STOP PANEL ASSEMBLY	1	UN			85634624	165

EMERGENCY STOP PANEL ASSEMBLY

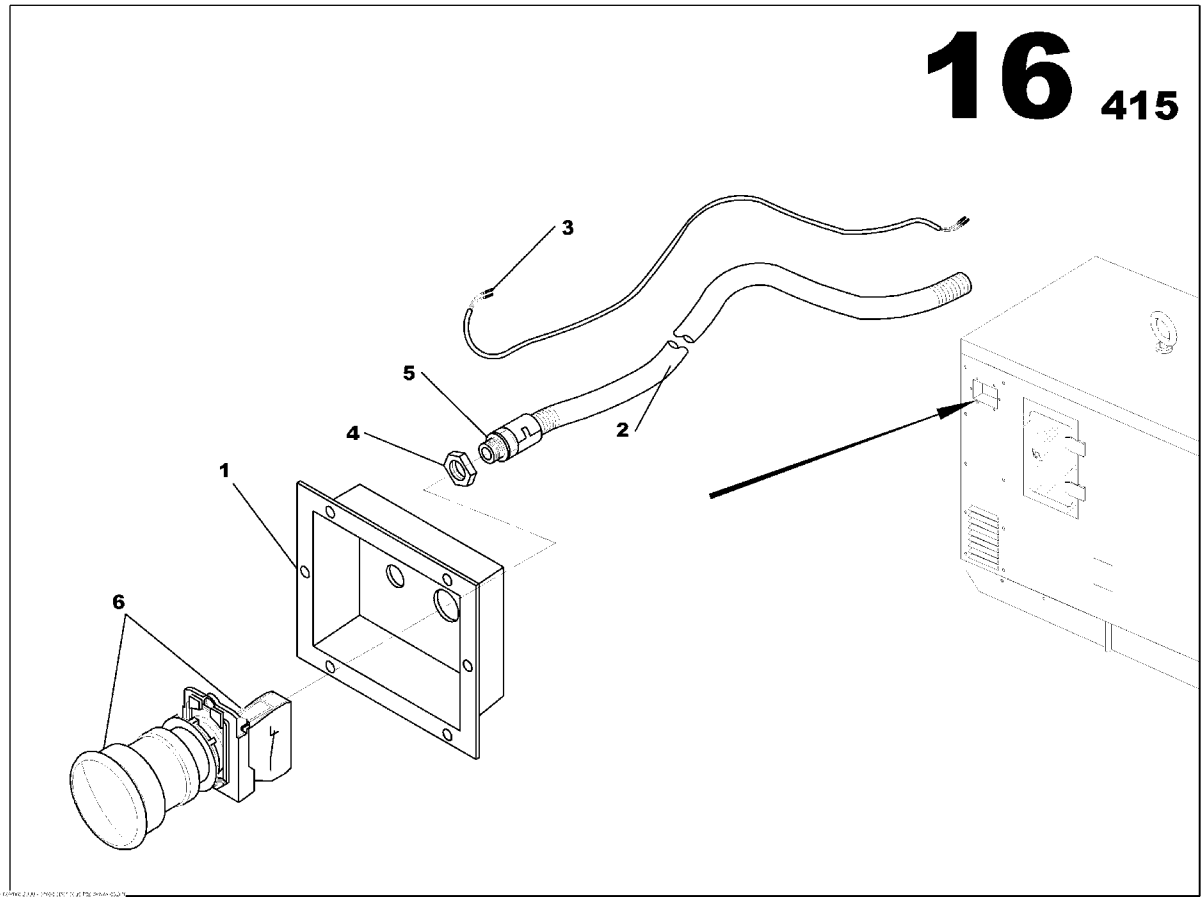

EMERGENCY STOP PANEL ASSEMBLY
85634624

Part numbers listed are only parts used in this model

Item	Part No.	Description	Qty	Un	From SN	To SN	Order PN	Page
1	85407294	EMERGENCY STOP PANEL	1	UN			85407294	
2	85635241	ELECTRICAL SHAFT D09	1.2	ML			85635241	
3	85635621	EMERGENCY STOP WIRING LOOM	1	UN			85635621	
4	85506061	GLAND NUT SCREW PG9	1	UN			85506061	
5	85499663	PIPE UNION PG9	1	UN			85499663	
6	85631422	EMERGENCY STOP BUTTON	1	UN			85631422	

DECALS TERMINAL BLOCK ASSEMBLY

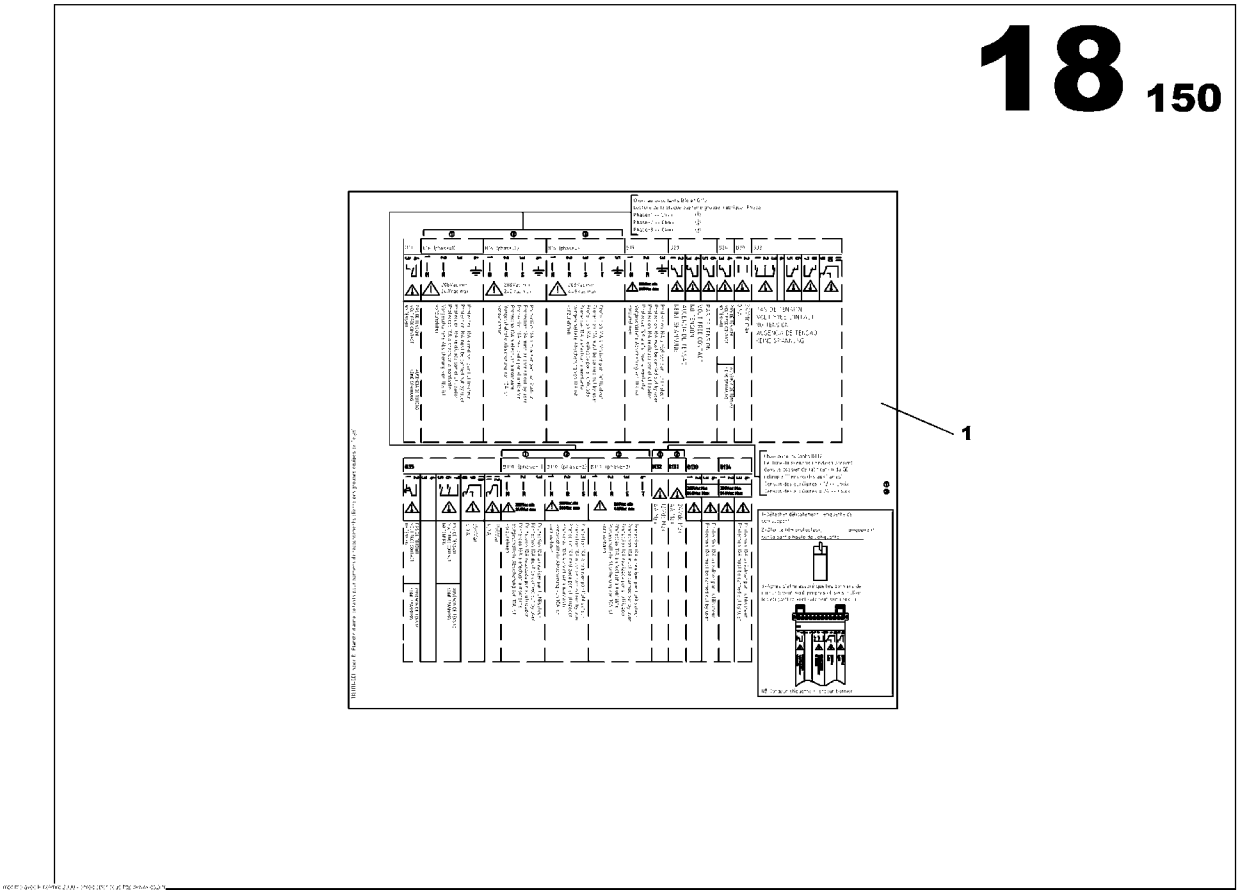

DECALS TERMINAL BLOCK ASSEMBLY
85639599

Part numbers listed are only parts used in this model

Item	Part No.	Description	Qty	Un	From SN	To SN	Order PN	Page
1	85639573	STICKER TERMINAL BLOCK	1	UN	03012825		85639573	

INTELLISYSTM OPTION CB CARD

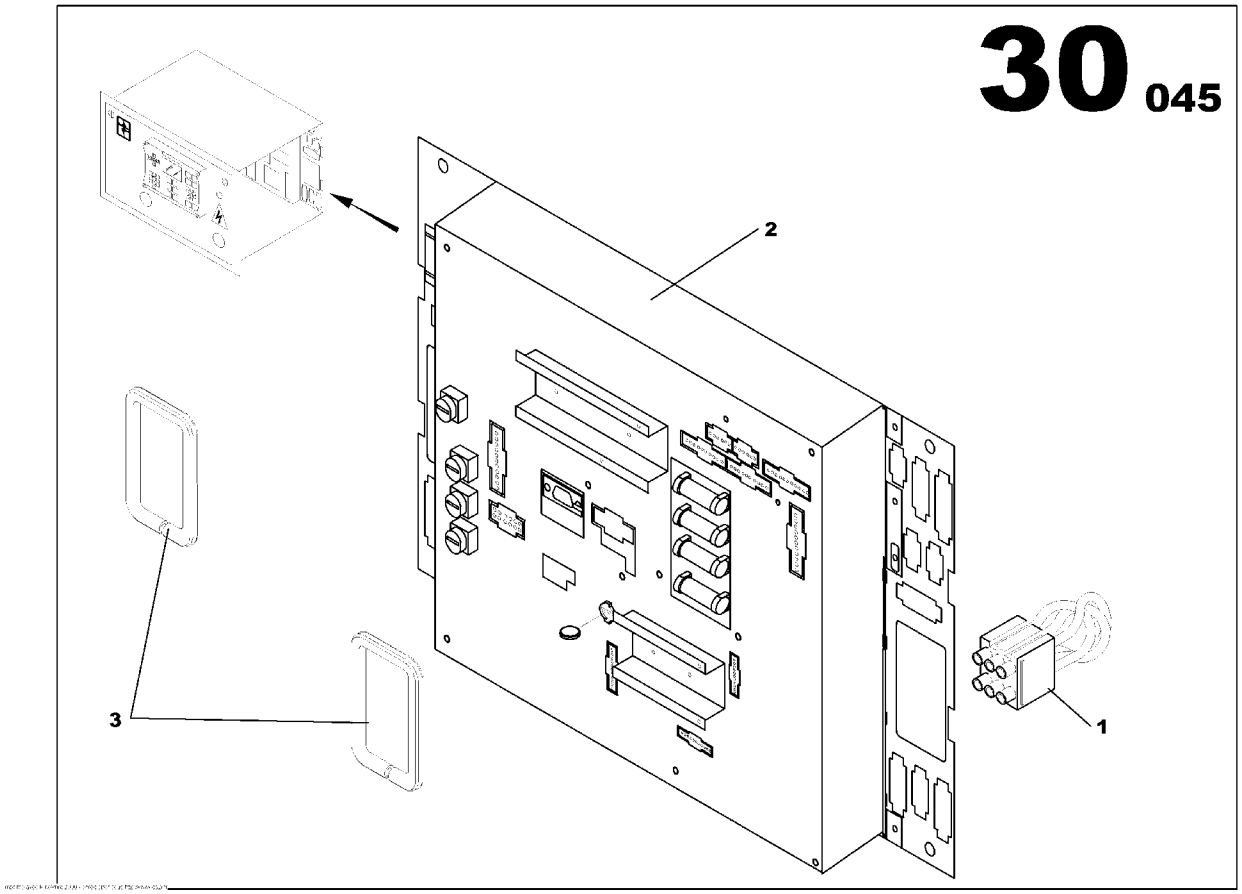

INTELLISYSTM OPTION CB CARD
85411551

Part numbers listed are only parts used in this model

Item	Part No.	Description	Qty	Un	From SN	To SN	Order PN	Page
1	85504033	WIRING LOOM C35S	1	UN			85504033	
2	85639250	INTELLISYSTM CARD CB *-1.10G*	1	UN	04000934		85639250	173
3	85630515	LINEAR SEAL	0.2	ML			85630515	

INTELLISYSTM OPTION CB CARD

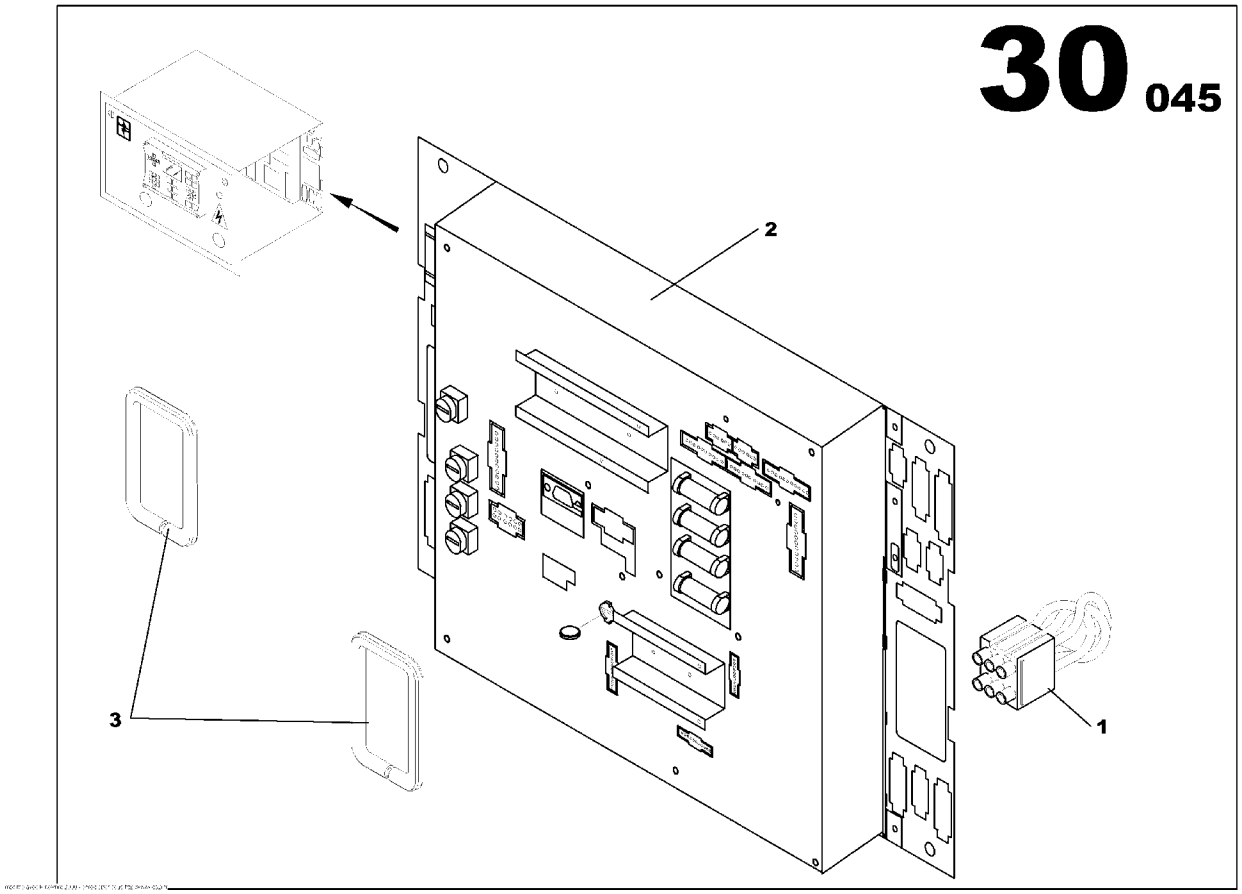

INTELLISYSTM OPTION CB CARD
85411551

Part numbers listed are only parts used in this model

Item	Part No.	Description	Qty	Un	From SN	To SN	Order PN	Page
1	85504033	WIRING LOOM C35S	1	UN			85504033	
2	85639250	INTELLISYSTM CARD CB *-1.10G*	1	UN	04000934		85639250	173
3	85630515	LINEAR SEAL	0.2	ML			85630515	

INTELLISYSTM CARD CB

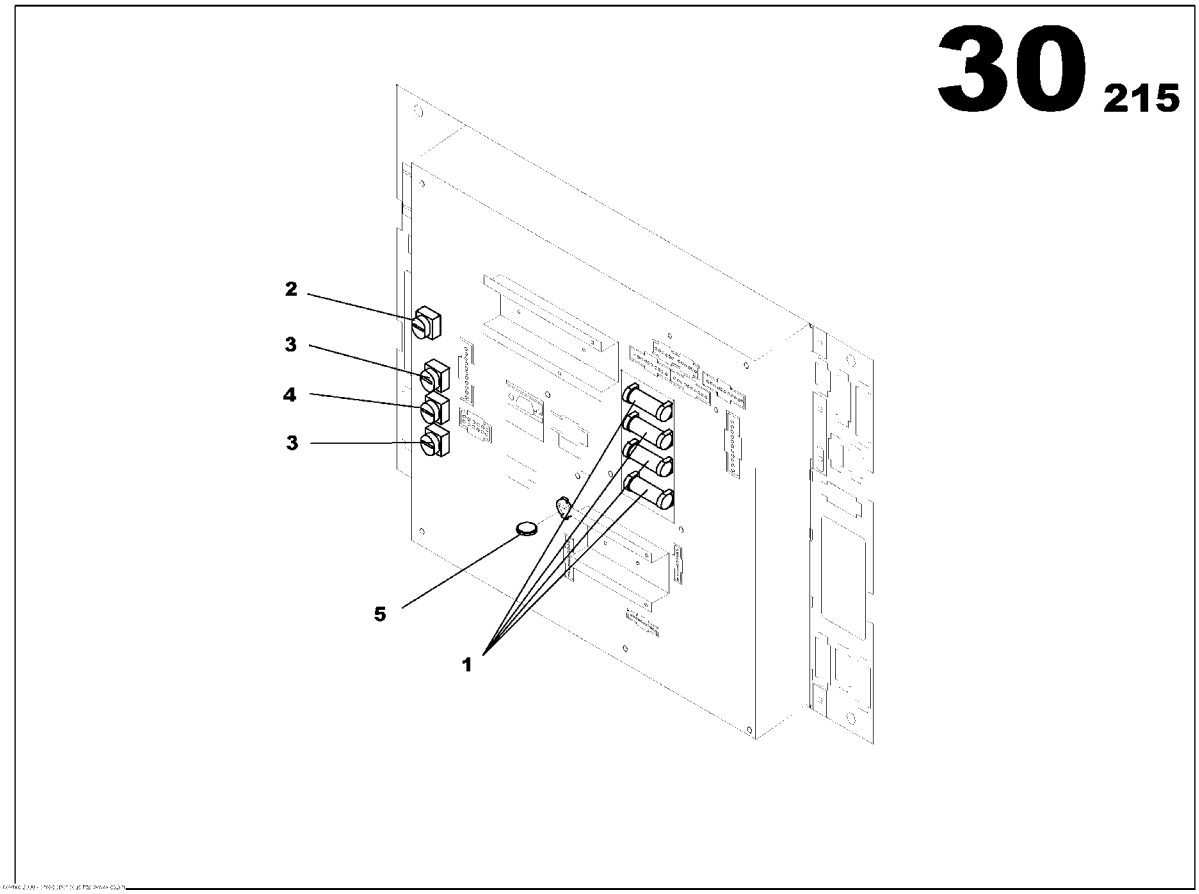

INTELLISYSTM CARD CB
85639250

Part numbers listed are only parts used in this model

Item	Part No.	Description	Qty	Un	From SN	To SN	Order PN	Page
1	85426112	FUSE CYLINDRICAL 12.5A	4	UN			85426112	
2	85426120	FUSE CYLINDRICAL 10A	1	UN			85426120	
3	85426138	FUSE CYLINDRICAL 1A	2	UN			85426138	
4	85426146	FUSE CYLINDRICAL 2,5A	1	UN			85426146	
5	85505154	CR2032 CELL	1	UN			85505154	

S2500 DASHBOARD OPTION

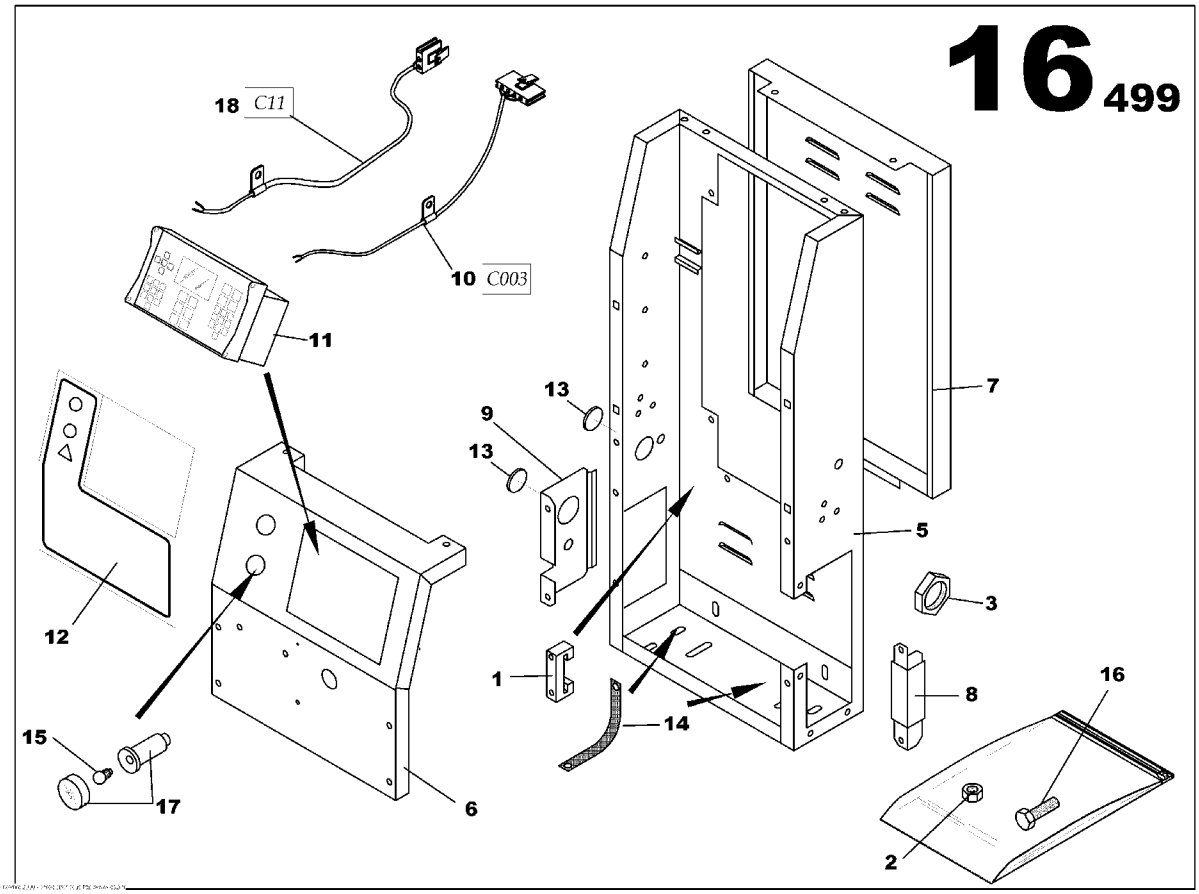

S2500 DASHBOARD OPTION
85636272

Part numbers listed are only parts used in this model

Item	Part No.	Description	Qty	Un	From SN	To SN	Order PN	Page
1	85634715	CONTROL PANEL SHEET METAL ASSEMBLY	1	UN			85634715	179
1	85408854	STOP	3	UN			85408854	
2	85408656	NUT M5	1	UN			85408656	
2	85636298	CONTROL PANEL ASSEMBLY	1	UN			85636298	181
3	85413276	GLAND NUT SCREW PG11	1	UN			85413276	
3	85636595	PLASTIC PLATE S2500 ASSEMBLY	1	UN			85636595	183
5	85636835	CONTROL PANEL S2500 HOUSING	1	UN			85636835	
6	85636843	CONTROL PANEL S2500 HOUSING	1	UN			85636843	
7	85636850	REAR CLOSURE CONTROL PANEL	1	UN			85636850	
8	85636868	SUPPORT PANEL	1	UN			85636868	
9	85635027	CABLE OUTLET PLATE	1	UN			85635027	
10	85504017	INTELLISYSTM WIRING LOOM 003	1	UN			85504017	
11	85623668	INTELLISYSTM DISPLAY *-IR PLATE SOFT 1.2*	1	UN			85627495	
12	85636587	PLASTIC PLATE L235xh245	1	UN			85636587	
13	85408391	RUBBER GROMMET D47	2	UN			85408391	
14	85505543	GROUND WIRES 16mm2	2	UN			85505543	
15	85402519	LAMP 12V BA9S TYPE	1	UN			85402519	
16	85636389	SCREW H M6x16	10	UN			85636389	
17	85503522	PANEL LIGHT CYLINDRIC D22	1	UN			85503522	
18	85504025	WIRING LOOM C11 L460	1	UN			85504025	

S2500 DASHBOARD OPTION

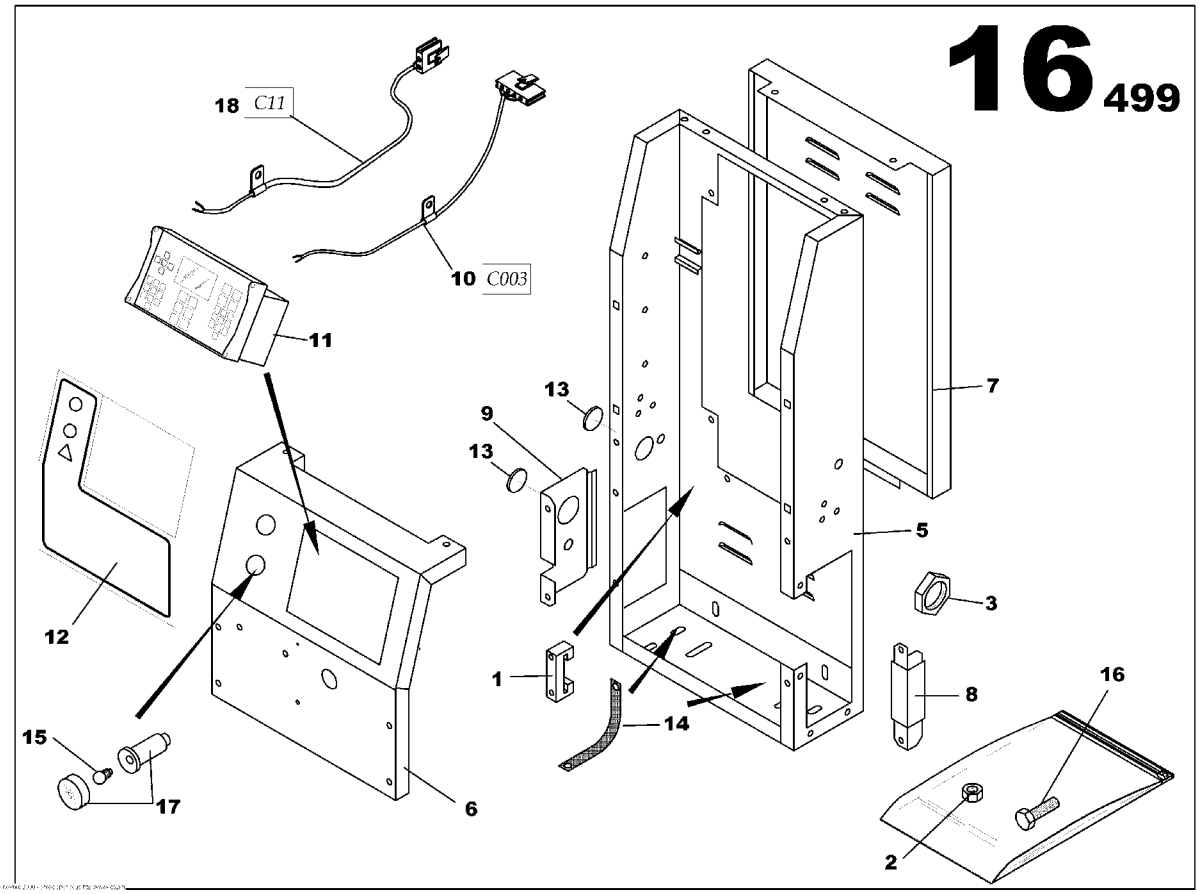

S2500 DASHBOARD OPTION
85636272

Part numbers listed are only parts used in this model

Item	Part No.	Description	Qty	Un	From SN	To SN	Order PN	Page
1	85634715	CONTROL PANEL SHEET METAL ASSEMBLY	1	UN			85634715	179
1	85408854	STOP	3	UN			85408854	
2	85408656	NUT M5	1	UN			85408656	
2	85636298	CONTROL PANEL ASSEMBLY	1	UN			85636298	181
3	85413276	GLAND NUT SCREW PG11	1	UN			85413276	
3	85636595	PLASTIC PLATE S2500 ASSEMBLY	1	UN			85636595	183
5	85636835	CONTROL PANEL S2500 HOUSING	1	UN			85636835	
6	85636843	CONTROL PANEL S2500 HOUSING	1	UN			85636843	
7	85636850	REAR CLOSURE CONTROL PANEL	1	UN			85636850	
8	85636868	SUPPORT PANEL	1	UN			85636868	
9	85635027	CABLE OUTLET PLATE	1	UN			85635027	
10	85504017	INTELLISYSTM WIRING LOOM 003	1	UN			85504017	
11	85623668	INTELLISYSTM DISPLAY *-IR PLATE SOFT 1.2*	1	UN			85627495	
12	85636587	PLASTIC PLATE L235xh245	1	UN			85636587	
13	85408391	RUBBER GROMMET D47	2	UN			85408391	
14	85505543	GROUND WIRES 16mm2	2	UN			85505543	
15	85402519	LAMP 12V BA9S TYPE	1	UN			85402519	
16	85636389	SCREW H M6x16	10	UN			85636389	
17	85503522	PANEL LIGHT CYLINDRIC D22	1	UN			85503522	
18	85504025	WIRING LOOM C11 L460	1	UN			85504025	

CONTROL PANEL SHEET METAL ASSEMBLY

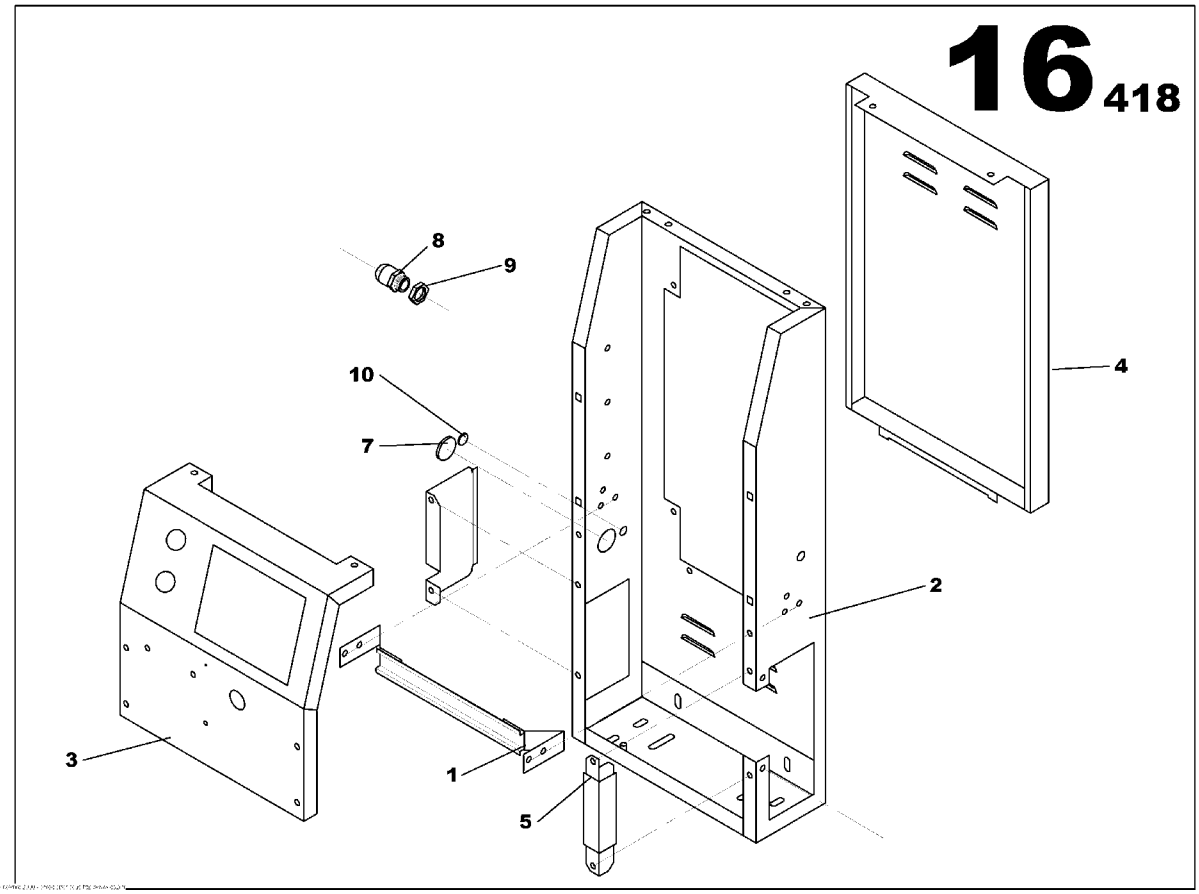

CONTROL PANEL SHEET METAL ASSEMBLY
85634715

Part numbers listed are only parts used in this model

Item	Part No.	Description	Qty	Un	From SN	To SN	Order PN	Page
1	85634632	ELECTRIC DIN RAIL	1	UN			85634632	
2	85634665	CONTROL PANEL S2500 HOUSING	1	UN			85634665	
3	85634673	CONTROL PANEL BRACKET	1	UN			85634673	
4	85634681	REAR CLOSURE PANEL S2500 CONTROL PANEL	1	UN			85634681	
5	85634699	SUPPORT PANEL S2500 CONTROL PANEL	1	UN			85634699	
6	85635027	CABLE OUTLET PLATE	1	UN			85635027	
7	85408391	RUBBER GROMMET D47	2	UN			85408391	
8	85635894	GLAND NUT PG13	1	UN			85635894	
9	85635902	PG13 NUT	1	UN			85635902	
10	85636694	RUBBER GROMMET D15	1	UN			85636694	

CONTROL PANEL ASSEMBLY

CONTROL PANEL ASSEMBLY
85636298

Part numbers listed are only parts used in this model

Item	Part No.	Description	Qty	Un	From SN	To SN	Order PN	Page

PLASTIC PLATE S2500 ASSEMBLY

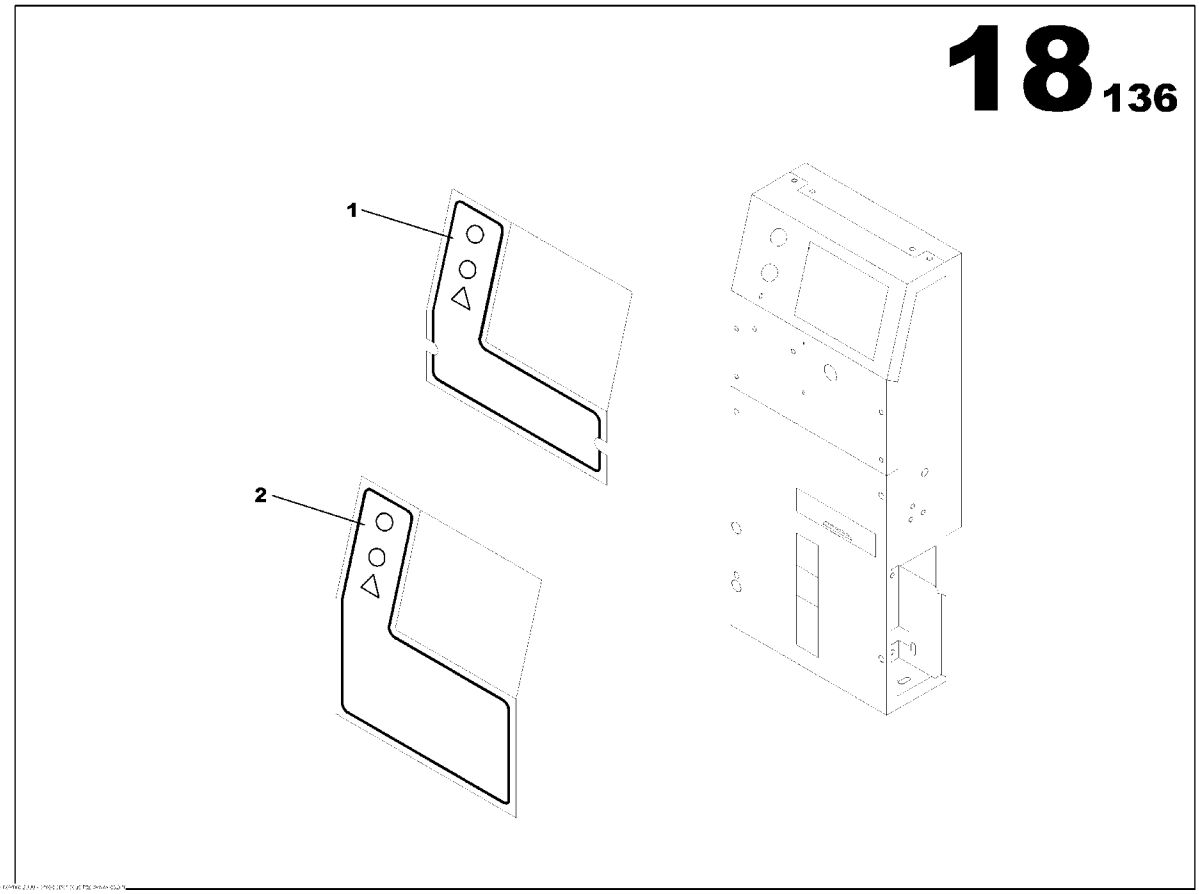

PLASTIC PLATE S2500 ASSEMBLY
85636595

Part numbers listed are only parts used in this model

Item	Part No.	Description	Qty	Un	From SN	To SN	Order PN	Page
1	85636587	PLASTIC PLATE L235xh245	1	UN			85636587	
2	85636611	PLASTIC PLATE L235xh325	1	UN			85636611	

TELYS 035 WIRING LOOM ASSEMBLY JD 6081

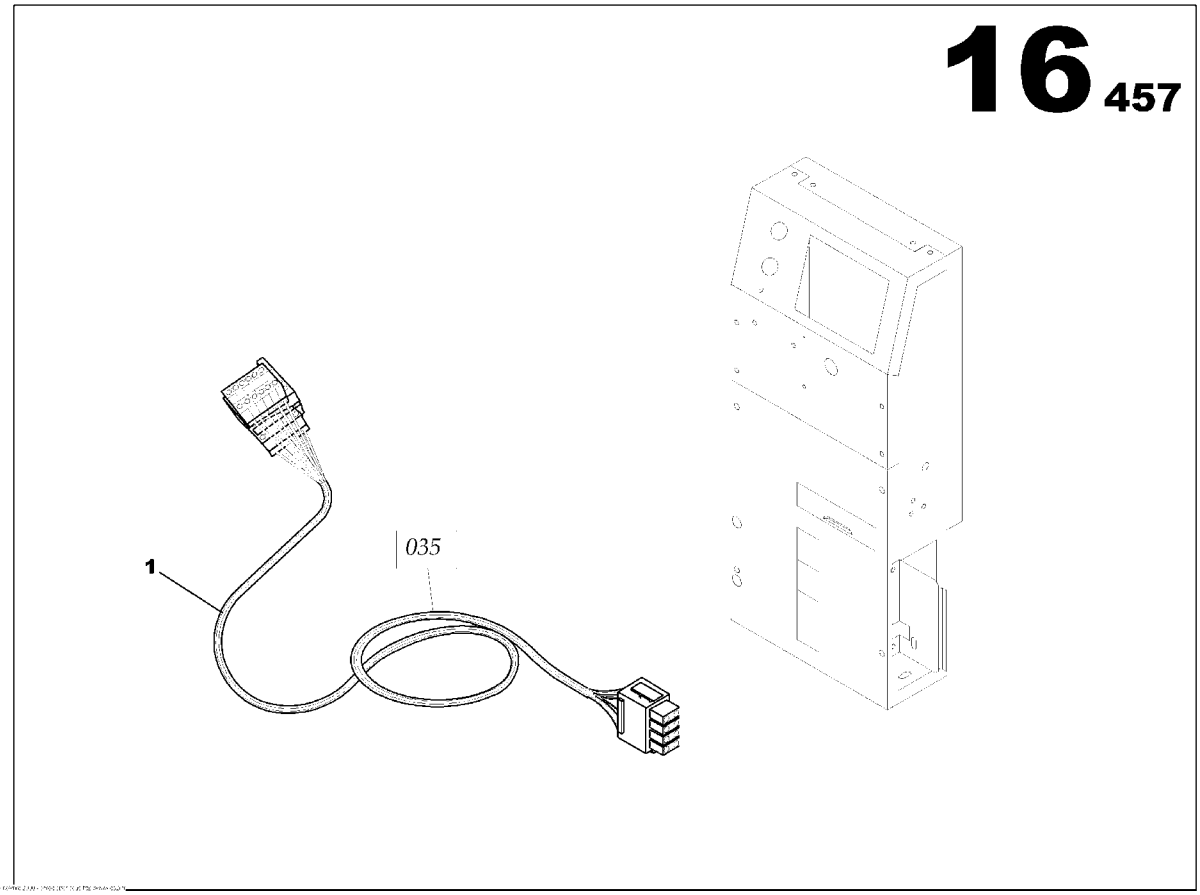

TELYS 035 WIRING LOOM ASSEMBLY JD 6081
85635415

Part numbers listed are only parts used in this model

Item	Part No.	Description	Qty	Un	From SN	To SN	Order PN	Page
1	85635308	INTELLISYSTM WIRING LOOM 035	1	UN	02010280		85635308	

AUTO START OPTION

Non illustré
Not illustrated

AUTO START OPTION

Part numbers listed are only parts used in this model

Item	Part No.	Description	Qty	Un	From SN	To SN	Order PN	Page
1	85627925	WATER PREHEATING ASSEMBLY	1	UN			85627925	189
2	85635225	TELYS 010 WIRING LOOM ASSEMBLY JD 6081	1	UN			85635225	191
3	85635340	ELECTRICAL SHAFT	1	UN			85635340	
4	85634616	EMERGENCY STOP PANEL ASSEMBLY	1	UN			85634616	193
5	85639599	DECALS TERMINAL BLOCK ASSEMBLY	1	UN			85639599	197
6	85411551	INTELLISYSTM OPTION CB CARD	1	UN			85411551	199
7	85636157	WATER PREHEATING OPTION	1	UN			85636157	205
8	85636181	EXTERNAL AMF PREDISPOSITION OPTION	1	UN			85636181	209
9	85636231	BATTERY CHARGER OPTION	1	UN			85636231	213
10	85636249	CURRENT SENSOR OPTION	1	UN			85636249	217
11	85636272	S2500 DASHBOARD OPTION	1	UN			85636272	221
12	17130741	INTELLISYSTM PARAMETER OPTION	1	UN			17130741	
13	85635399	TELYS 016 WIRING LOOM ASSEMBLY JD 6081	1	UN			85635399	231
14	85635845	AUXILIARY CONTACT ASSEMBLY	1	UN			85635845	233

WATER PREHEATING ASSEMBLY

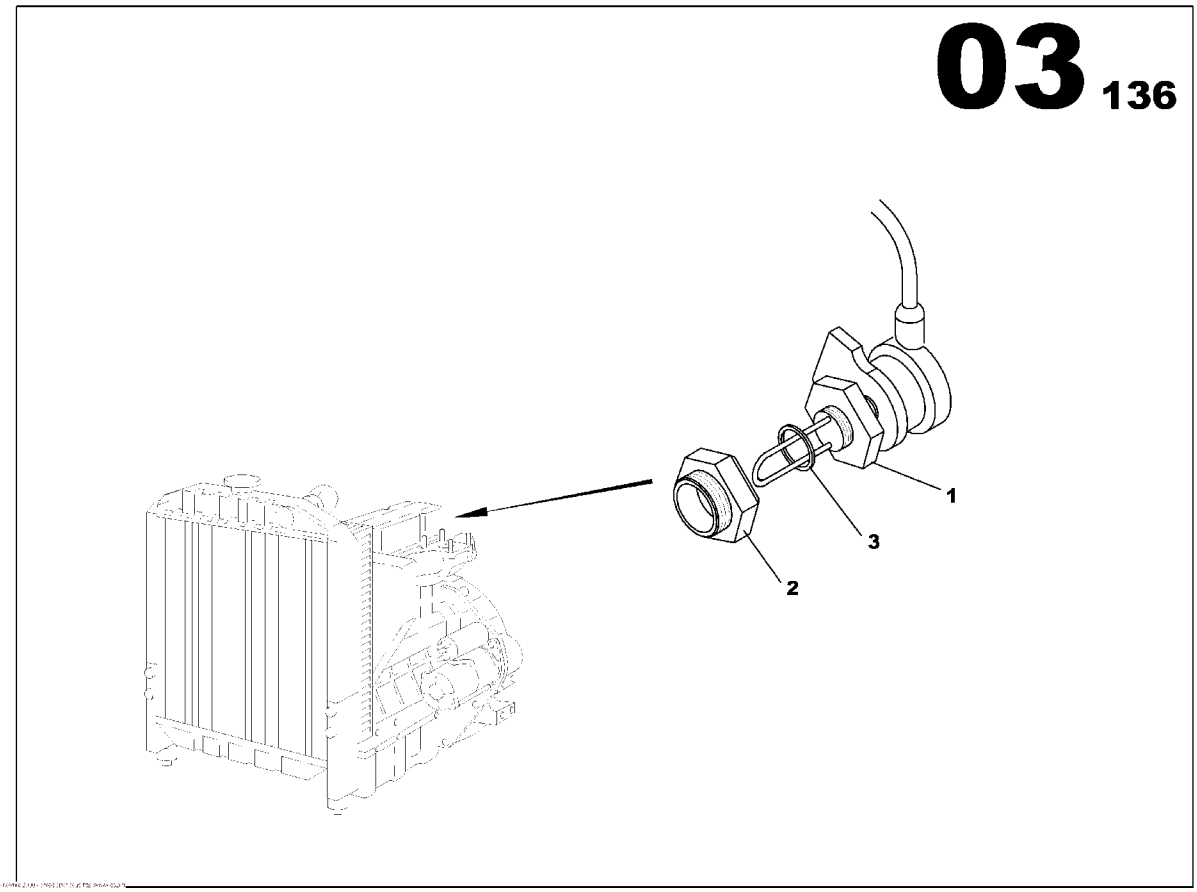

WATER PREHEATING ASSEMBLY
85627925

Part numbers listed are only parts used in this model

Item	Part No.	Description	Qty	Un	From SN	To SN	Order PN	Page
1	85429157	COOLANT HEATER RESISTANCE 300W 240V	1	UN			85429157	
2	85633188	HEATING RESISTOR ADAPTATOR	1	UN			85633188	
3	85413755	GASKET D20x26	1	UN			85413755	

TELYS 010 WIRING LOOM ASSEMBLY JD 6081

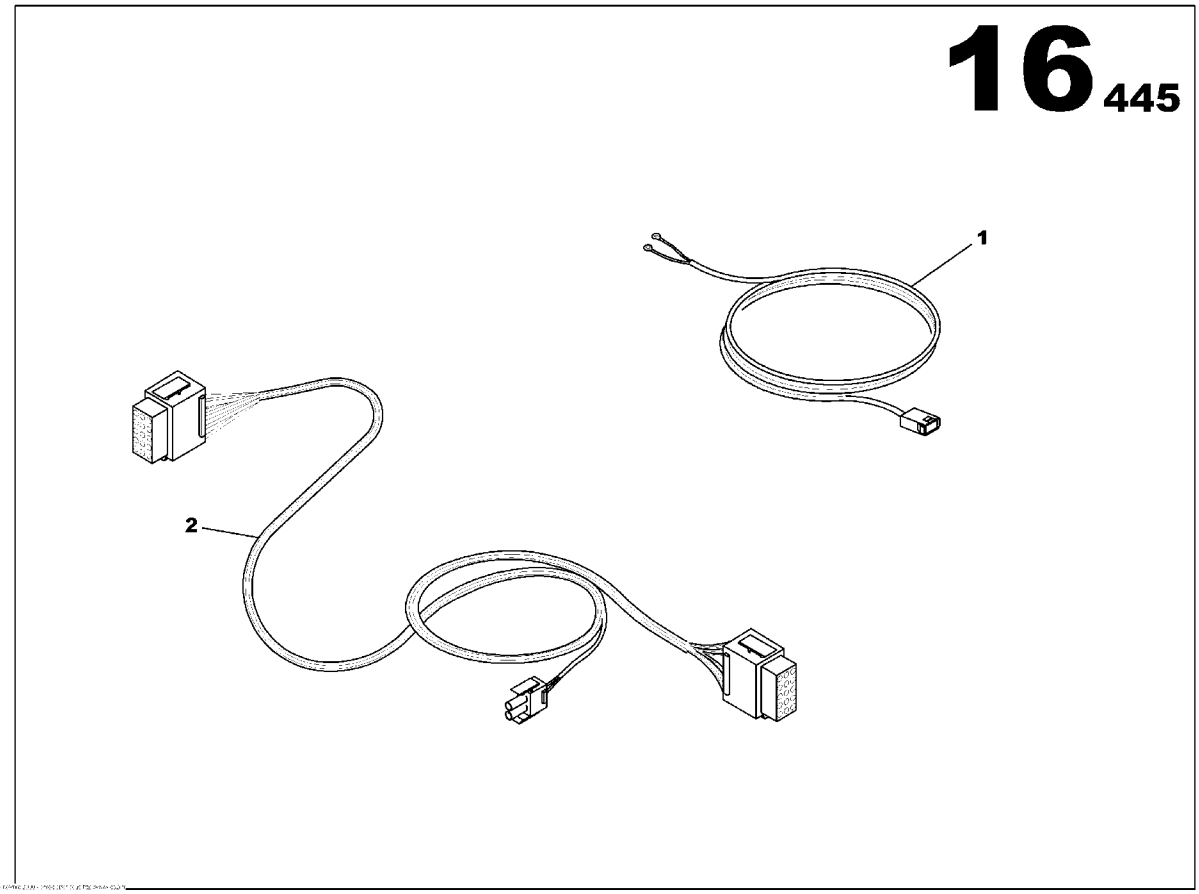

TELYS 010 WIRING LOOM ASSEMBLY JD 6081
85635225

Part numbers listed are only parts used in this model

Item	Part No.	Description	Qty	Un	From SN	To SN	Order PN	Page
1	85635183	INTELLISYSTM WIRING LOOM 010-BAT	1	UN			85635183	
2	85635209	INTELLISYSTM WIRING LOOM 010	1	UN			85635209	

EMERGENCY STOP PANEL ASSEMBLY

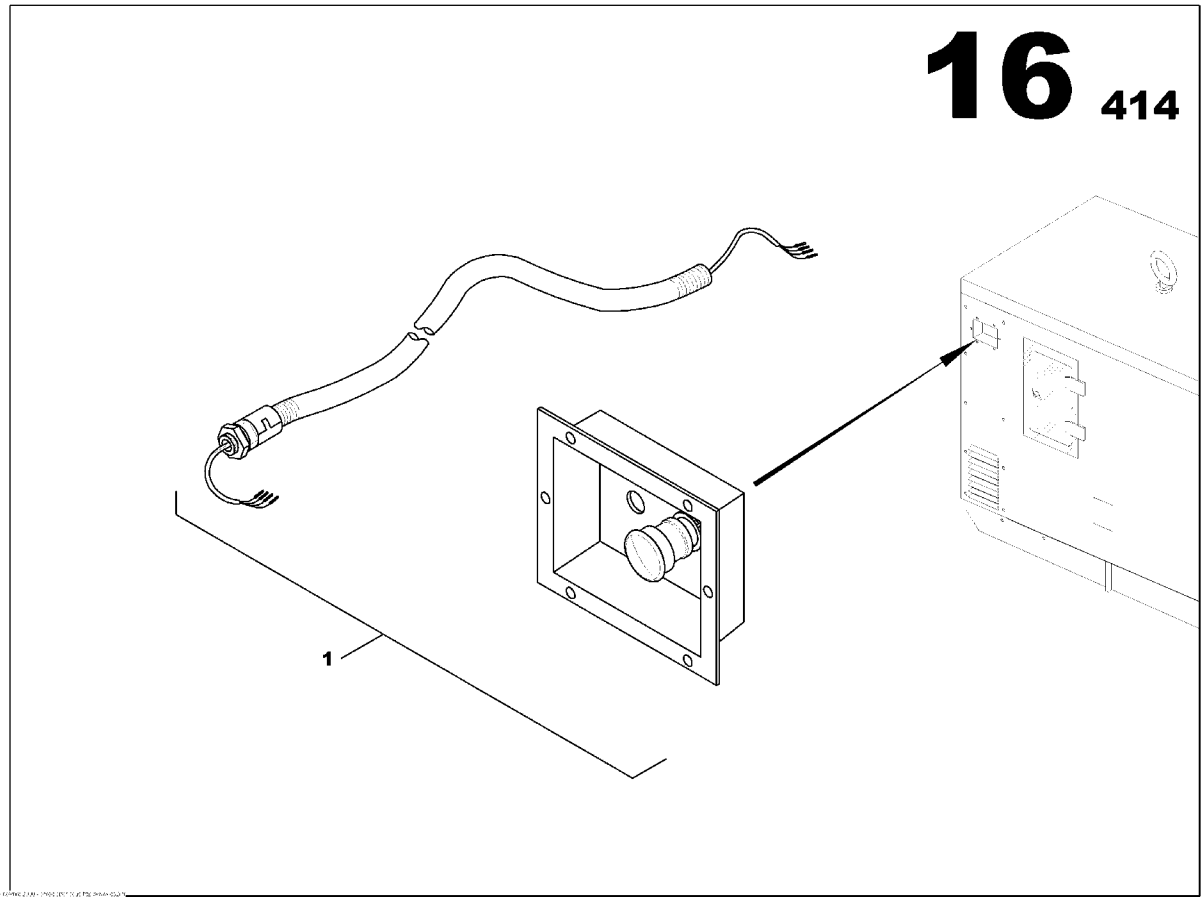

EMERGENCY STOP PANEL ASSEMBLY
85634616

Part numbers listed are only parts used in this model

Item	Part No.	Description	Qty	Un	From SN	To SN	Order PN	Page
1	85634624	EMERGENCY STOP PANEL ASSEMBLY	1	UN			85634624	195

EMERGENCY STOP PANEL ASSEMBLY

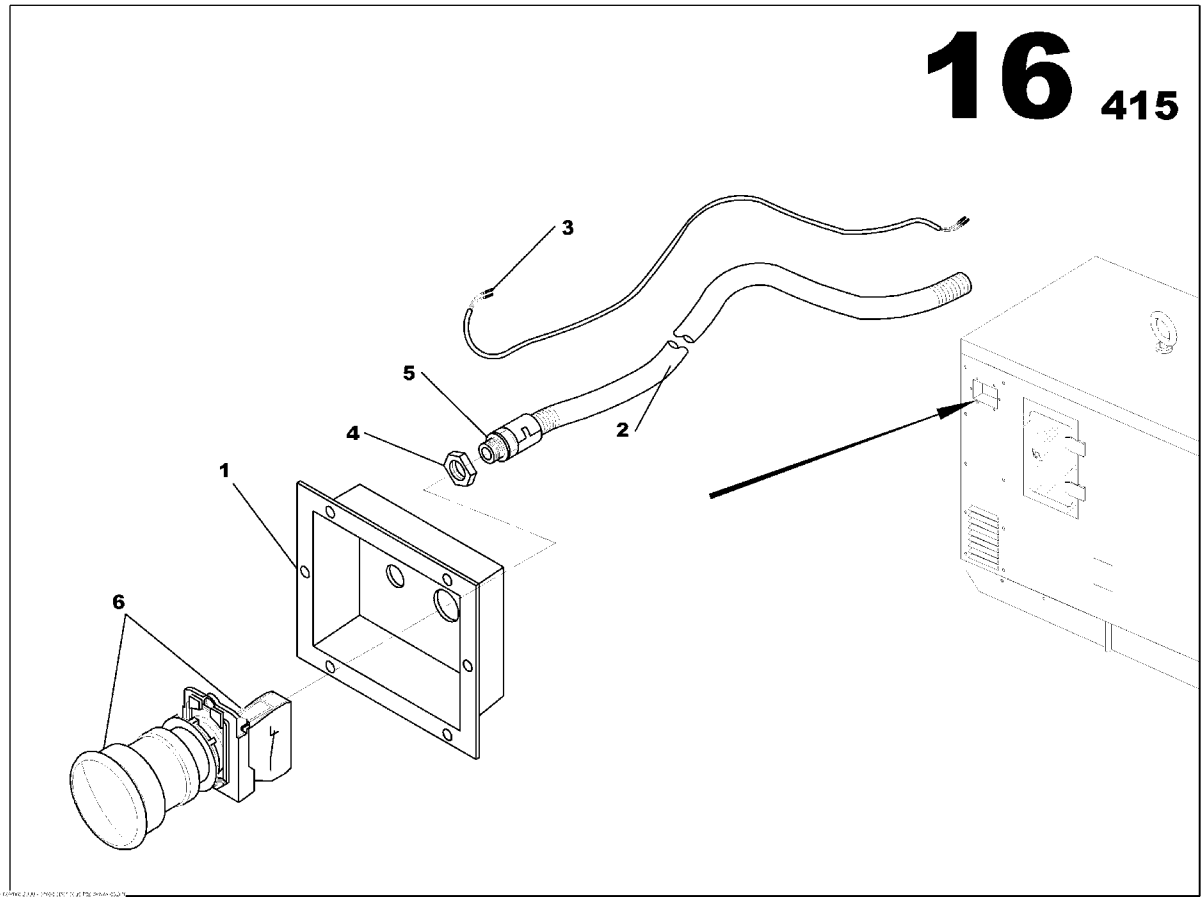

EMERGENCY STOP PANEL ASSEMBLY
85634624

Part numbers listed are only parts used in this model

Item	Part No.	Description	Qty	Un	From SN	To SN	Order PN	Page
1	85407294	EMERGENCY STOP PANEL	1	UN			85407294	
2	85635241	ELECTRICAL SHAFT D09	1.2	ML			85635241	
3	85635621	EMERGENCY STOP WIRING LOOM	1	UN			85635621	
4	85506061	GLAND NUT SCREW PG9	1	UN			85506061	
5	85499663	PIPE UNION PG9	1	UN			85499663	
6	85631422	EMERGENCY STOP BUTTON	1	UN			85631422	

DECALS TERMINAL BLOCK ASSEMBLY

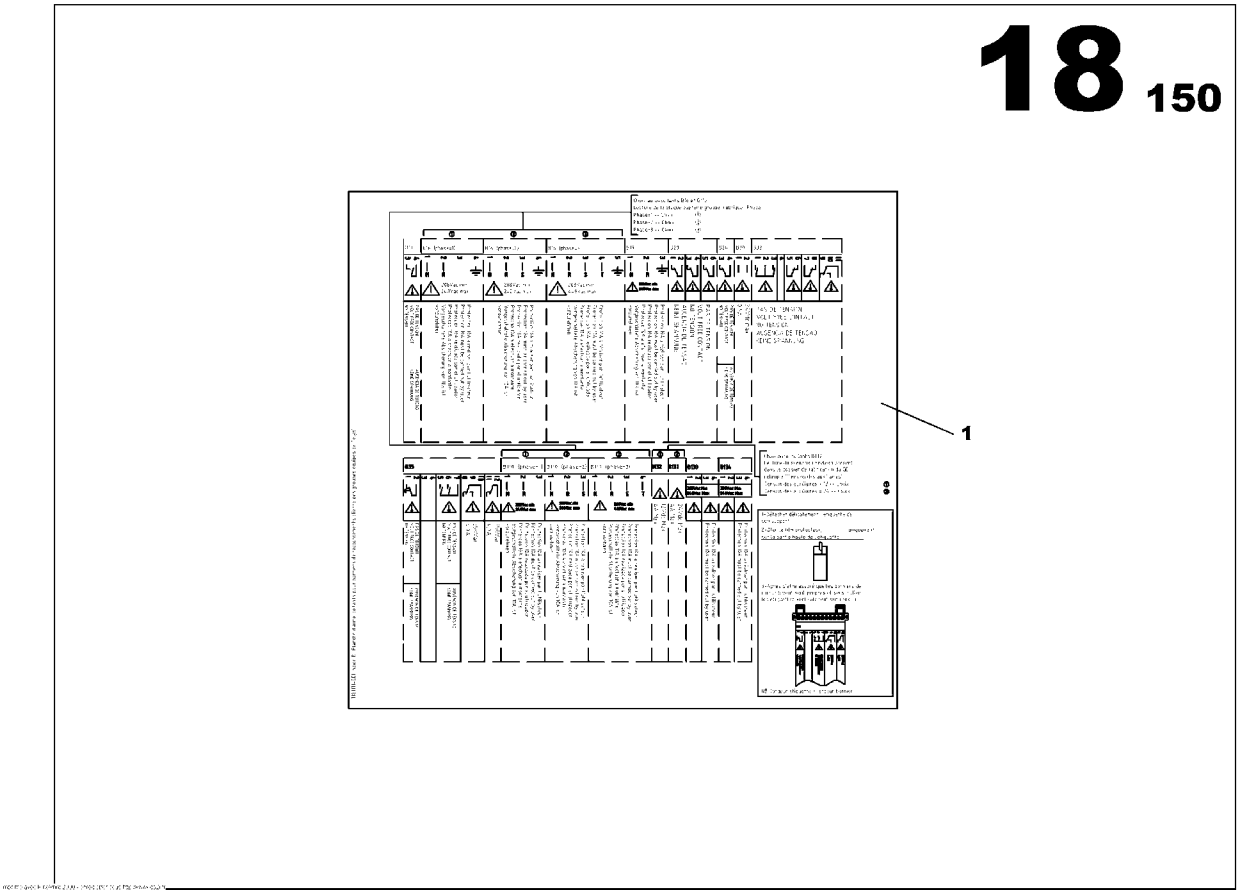

DECALS TERMINAL BLOCK ASSEMBLY
85639599

Part numbers listed are only parts used in this model

Item	Part No.	Description	Qty	Un	From SN	To SN	Order PN	Page
1	85639573	STICKER TERMINAL BLOCK	1	UN	03012825		85639573	

INTELLISYSTM OPTION CB CARD

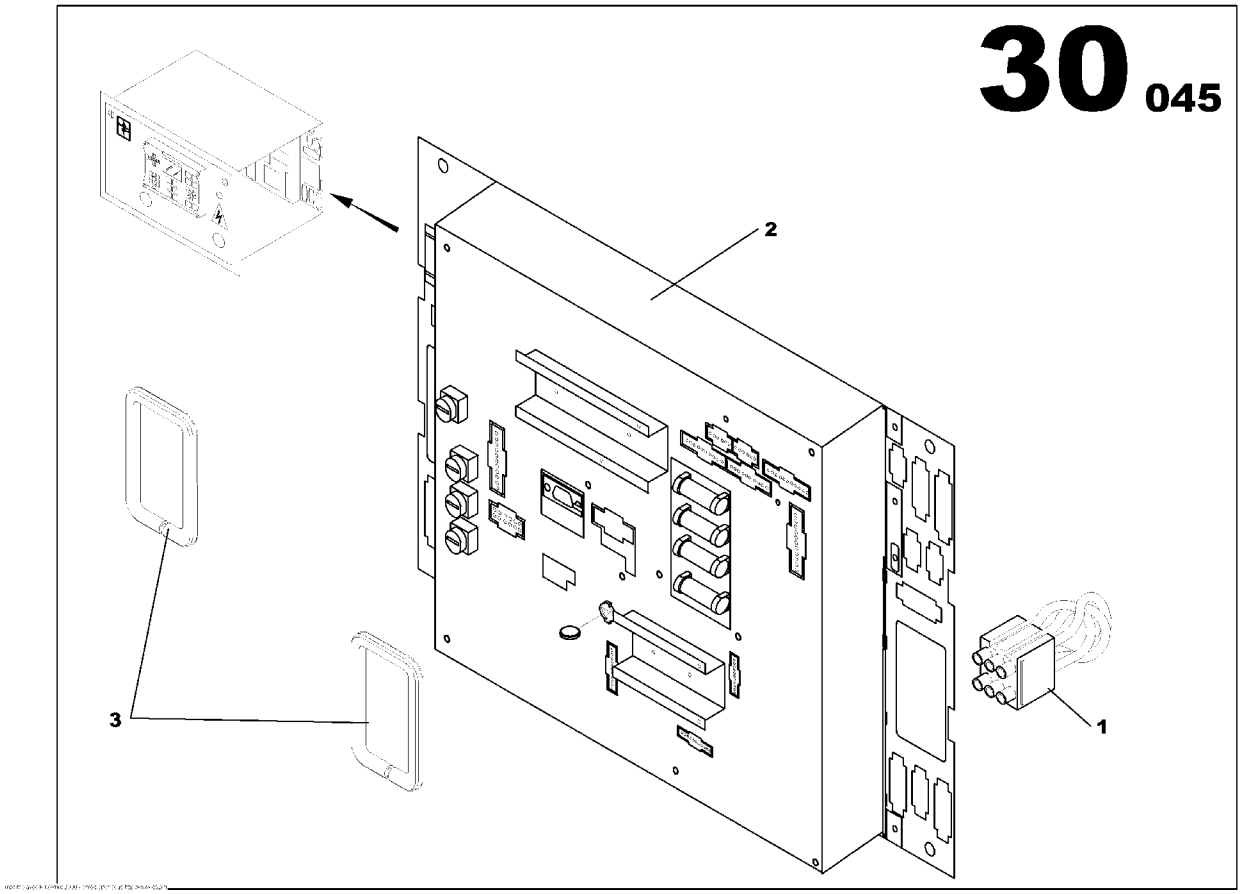

INTELLISYSTM OPTION CB CARD
85411551

Part numbers listed are only parts used in this model

Item	Part No.	Description	Qty	Un	From SN	To SN	Order PN	Page
1	85504033	WIRING LOOM C35S	1	UN			85504033	
2	85639250	INTELLISYSTM CARD CB *-1.10G*	1	UN	04000934		85639250	203
3	85630515	LINEAR SEAL	0.2	ML			85630515	

INTELLISYSTM OPTION CB CARD

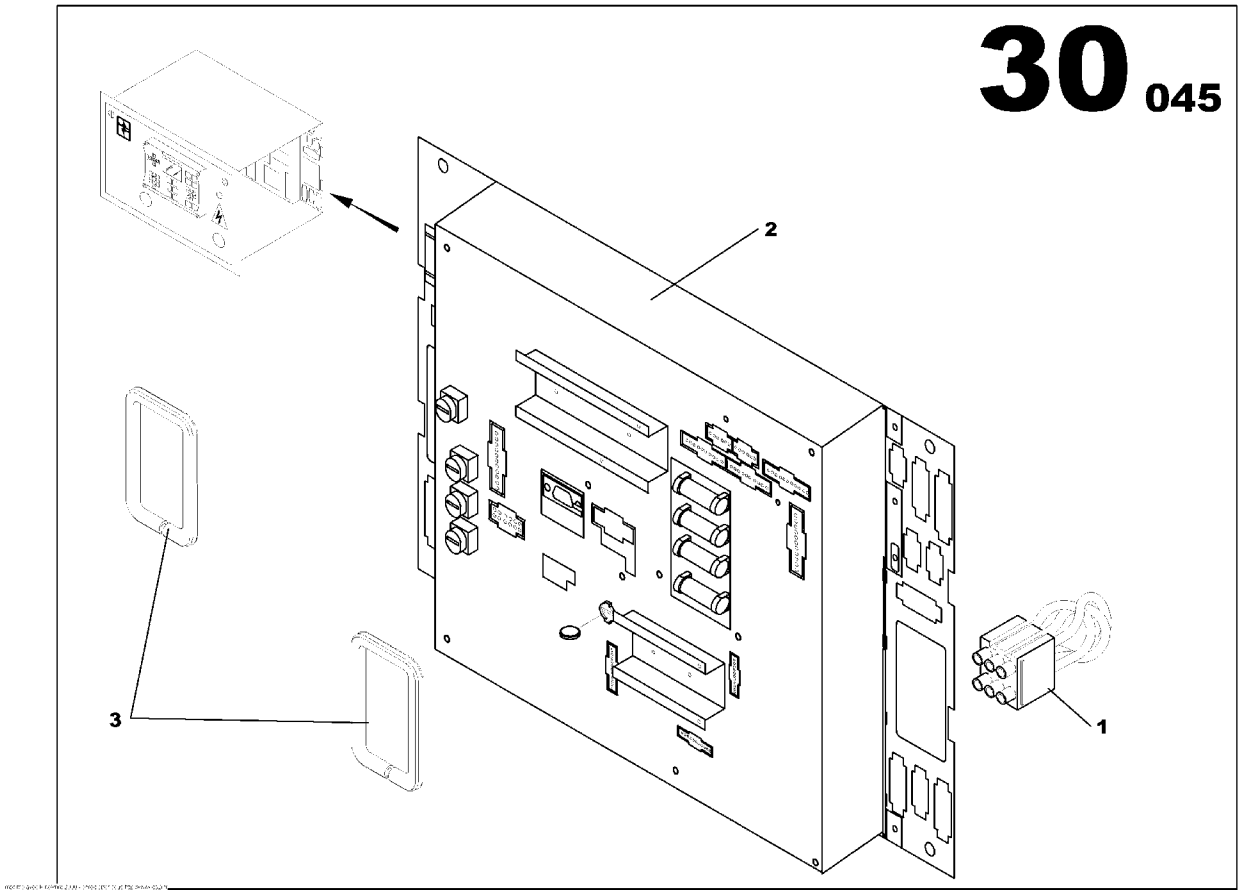

INTELLISYSTM OPTION CB CARD
85411551

Part numbers listed are only parts used in this model

Item	Part No.	Description	Qty	Un	From SN	To SN	Order PN	Page
1	85504033	WIRING LOOM C35S	1	UN			85504033	
2	85639250	INTELLISYSTM CARD CB *-1.10G*	1	UN	04000934		85639250	203
3	85630515	LINEAR SEAL	0.2	ML			85630515	

INTELLISYSTM CARD CB

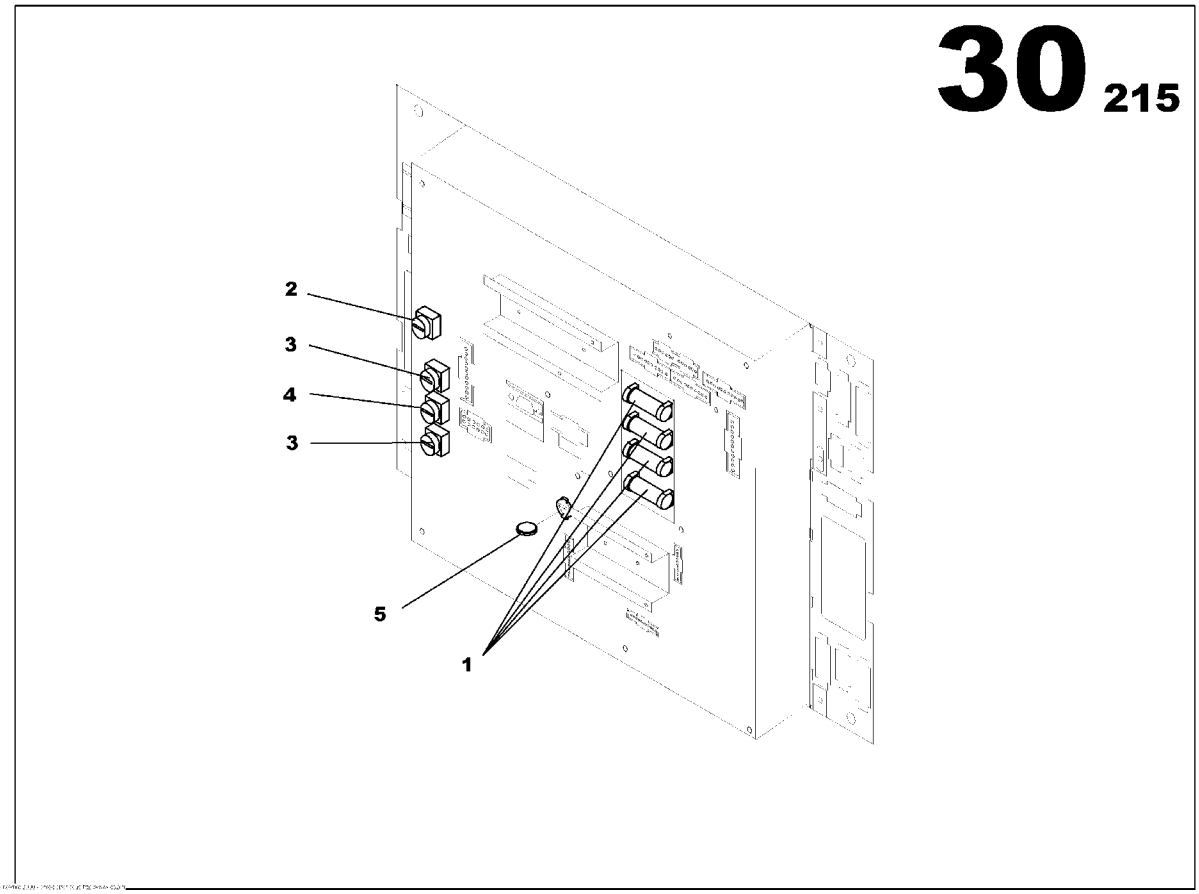

INTELLISYSTM CARD CB
85639250

Part numbers listed are only parts used in this model

Item	Part No.	Description	Qty	Un	From SN	To SN	Order PN	Page
1	85426112	FUSE CYLINDRICAL 12.5A	4	UN			85426112	
2	85426120	FUSE CYLINDRICAL 10A	1	UN			85426120	
3	85426138	FUSE CYLINDRICAL 1A	2	UN			85426138	
4	85426146	FUSE CYLINDRICAL 2,5A	1	UN			85426146	
5	85505154	CR2032 CELL	1	UN			85505154	

WATER PREHEATING OPTION

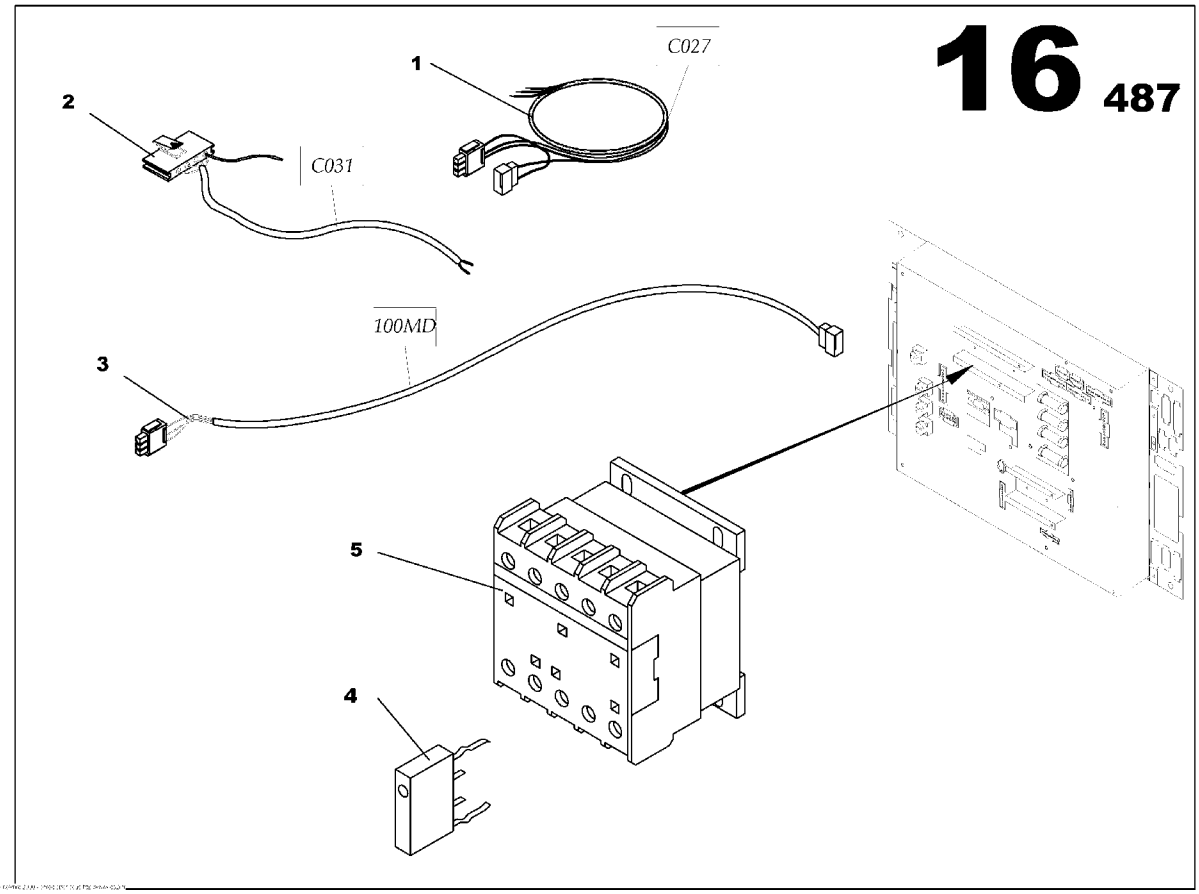

WATER PREHEATING OPTION
85636157

Part numbers listed are only parts used in this model

Item	Part No.	Description	Qty	Un	From SN	To SN	Order PN	Page
1	85636918	INTELLISYSTM WIRING LOOM 027	1	UN			85636918	
2	85506517	WIRING LOOM C031/33/34	1	UN			85506517	
3	85636926	INTELLISYSTM WIRING LOOM 028	1	UN			85636926	
4	85506640	SURGE SUPRESSOR BLOCK	1	UN			85506640	
5	85506657	CONTACTOR	1	UN			85506657	

WATER PREHEATING OPTION

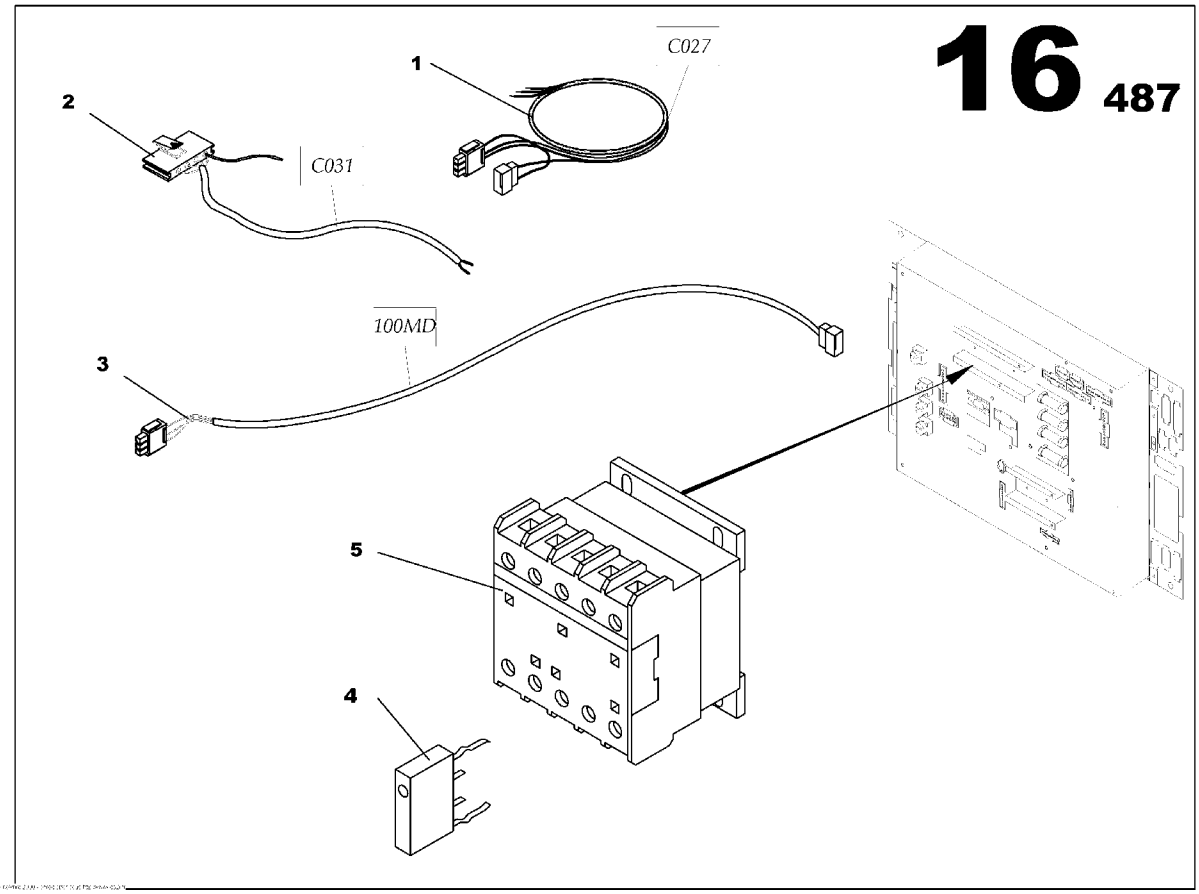

WATER PREHEATING OPTION
85636157

Part numbers listed are only parts used in this model

Item	Part No.	Description	Qty	Un	From SN	To SN	Order PN	Page
1	85636918	INTELLISYSTM WIRING LOOM 027	1	UN			85636918	
2	85506517	WIRING LOOM C031/33/34	1	UN			85506517	
3	85636926	INTELLISYSTM WIRING LOOM 028	1	UN			85636926	
4	85506640	SURGE SUPRESSOR BLOCK	1	UN			85506640	
5	85506657	CONTACTOR	1	UN			85506657	

EXTERNAL AMF PREDISPOSITION OPTION

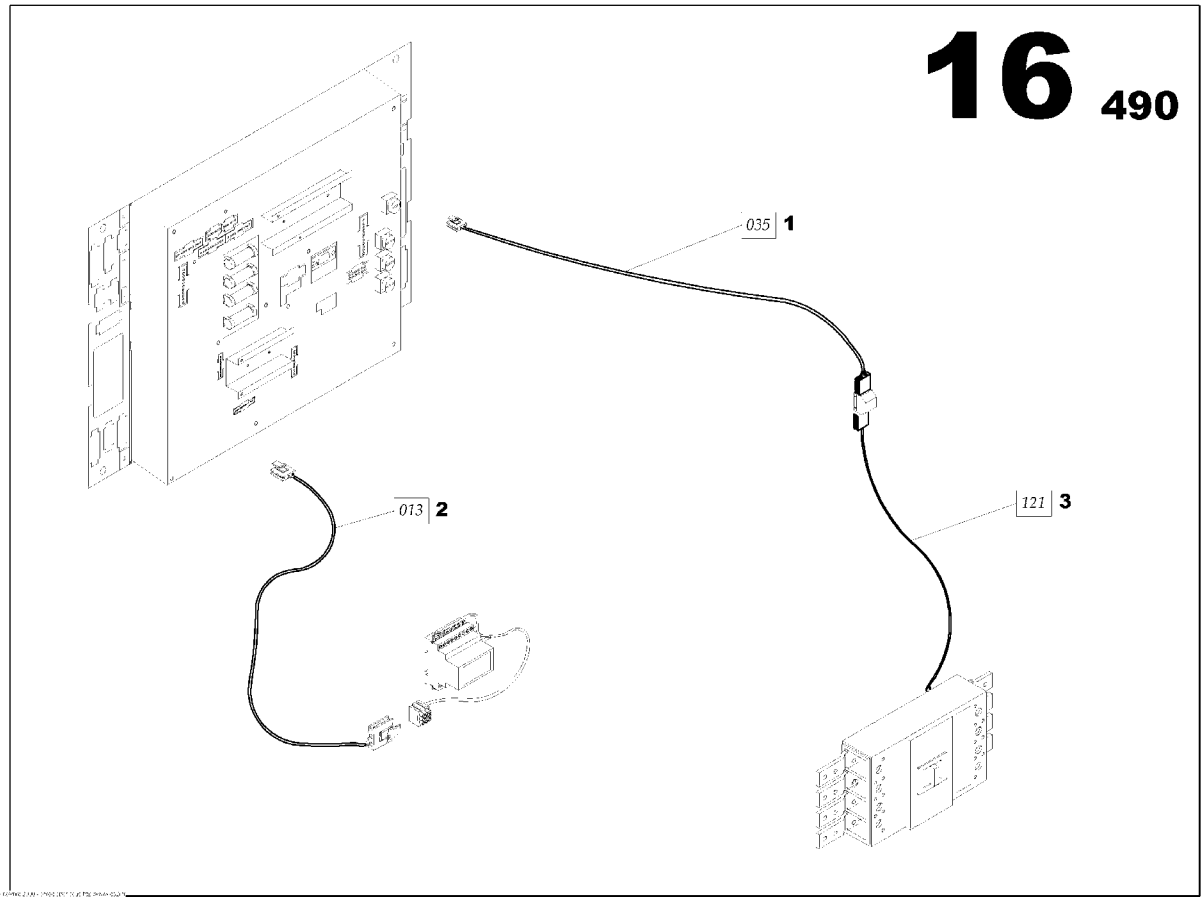

EXTERNAL AMF PREDISPOSITION OPTION
85636181

Part numbers listed are only parts used in this model

Item	Part No.	Description	Qty	Un	From SN	To SN	Order PN	Page
1	85635308	INTELLISYSTM WIRING LOOM 035	1	UN			85635308	
2	85636876	INTELLISYSTM WIRING LOOM 013	1	UN			85636876	
3	85636884	INTELLISYSTM WIRING LOOM 121	1	UN			85636884	

EXTERNAL AMF PREDISPOSITION OPTION

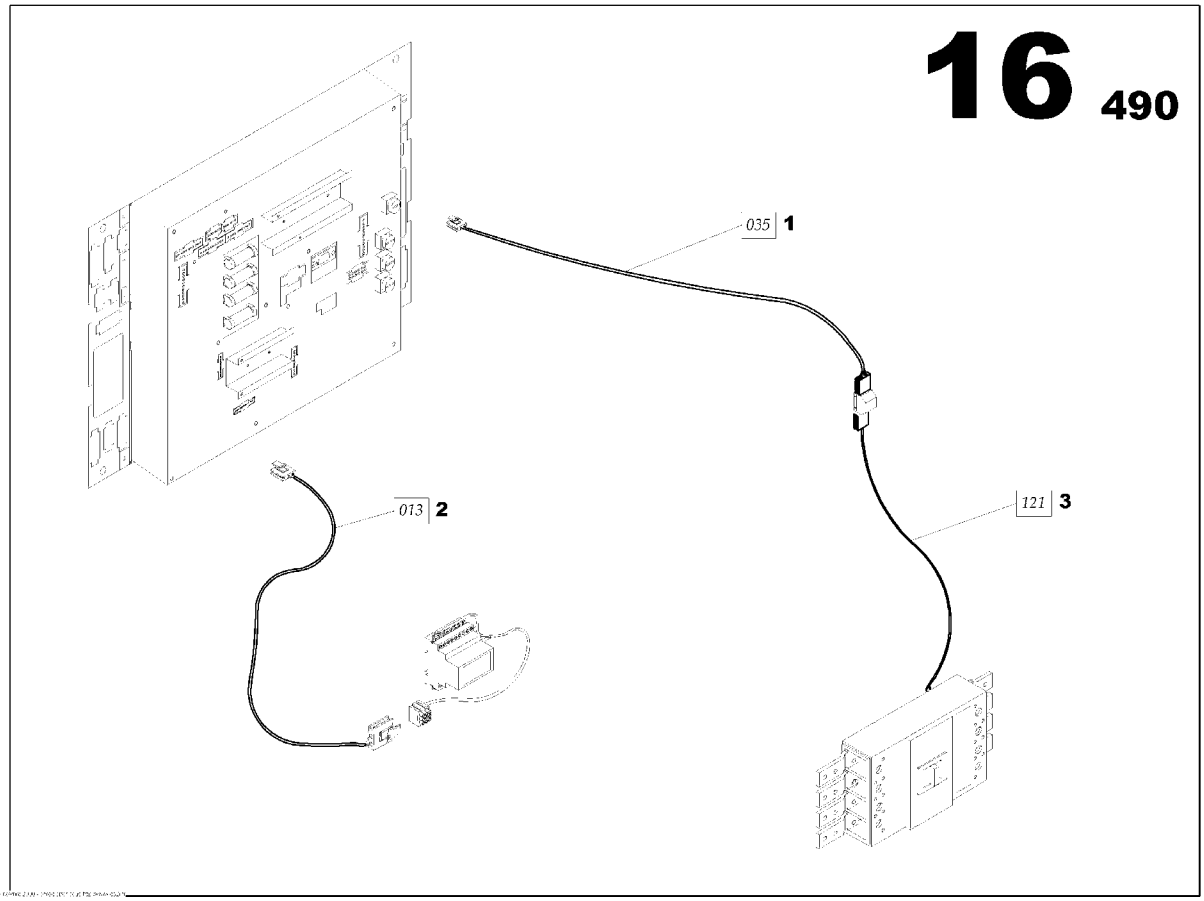

EXTERNAL AMF PREDISPOSITION OPTION
85636181

Part numbers listed are only parts used in this model

Item	Part No.	Description	Qty	Un	From SN	To SN	Order PN	Page
1	85635308	INTELLISYSTM WIRING LOOM 035	1	UN			85635308	
2	85636876	INTELLISYSTM WIRING LOOM 013	1	UN			85636876	
3	85636884	INTELLISYSTM WIRING LOOM 121	1	UN			85636884	

BATTERY CHARGER OPTION

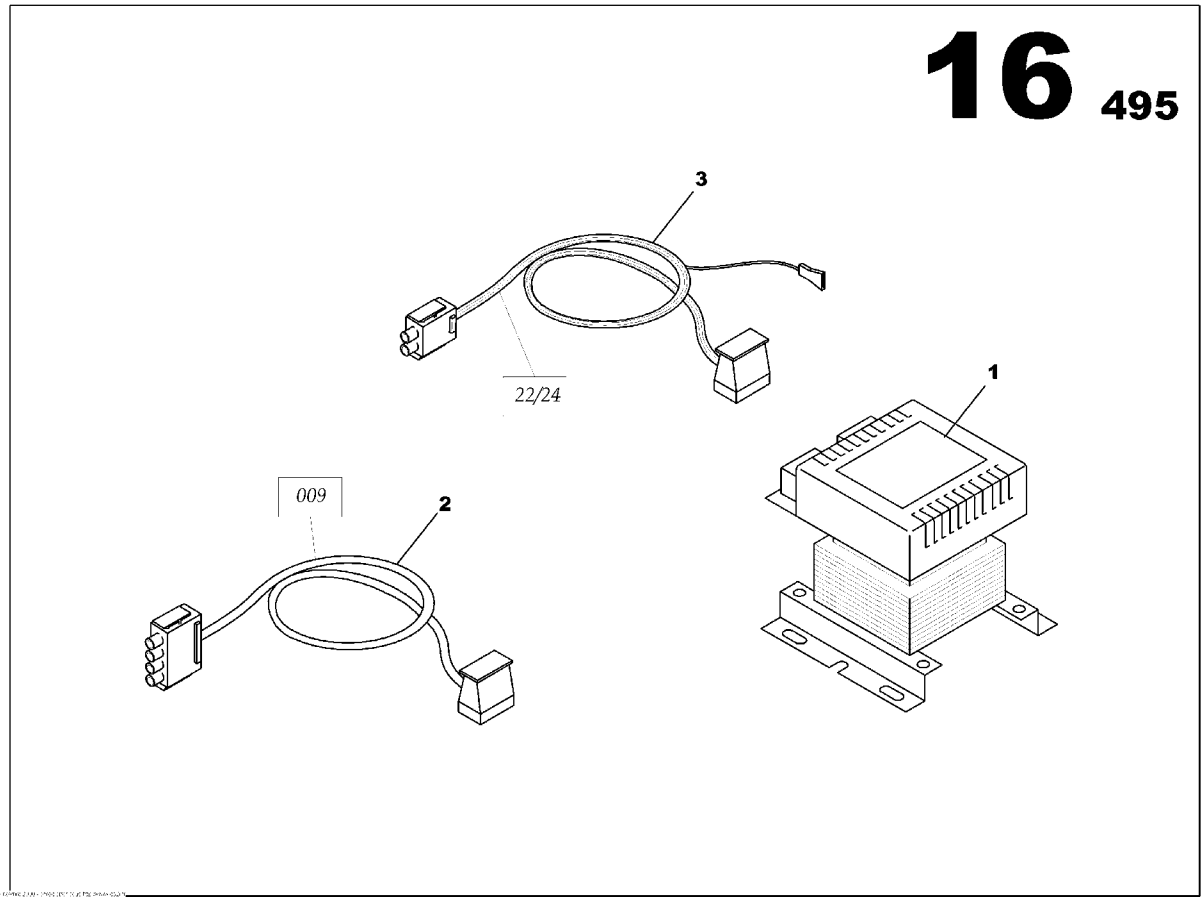

BATTERY CHARGER OPTION
85636231

Part numbers listed are only parts used in this model

Item	Part No.	Description	Qty	Un	From SN	To SN	Order PN	Page
1	85636975	BATTERY CHARGER	1	UN			85636975	
2	85636900	INTELLISYSTM WIRING LOOM 009	1	UN			85636900	
3	85506541	WIRING LOOM C022/024	1	UN			85506541	

BATTERY CHARGER OPTION

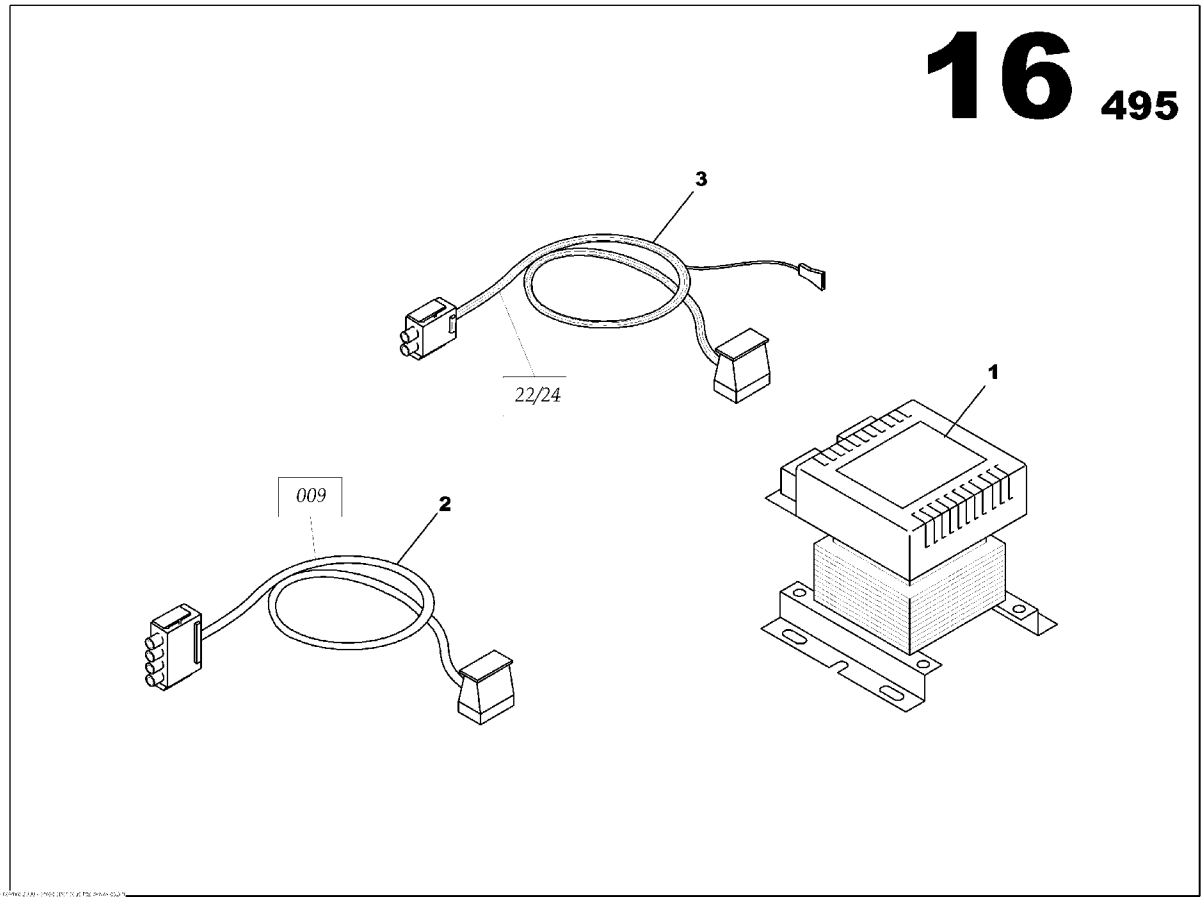

BATTERY CHARGER OPTION
85636231

Part numbers listed are only parts used in this model

Item	Part No.	Description	Qty	Un	From SN	To SN	Order PN	Page
1	85636975	BATTERY CHARGER	1	UN			85636975	
2	85636900	INTELLISYSTM WIRING LOOM 009	1	UN			85636900	
3	85506541	WIRING LOOM C022/024	1	UN			85506541	

CURRENT SENSOR OPTION

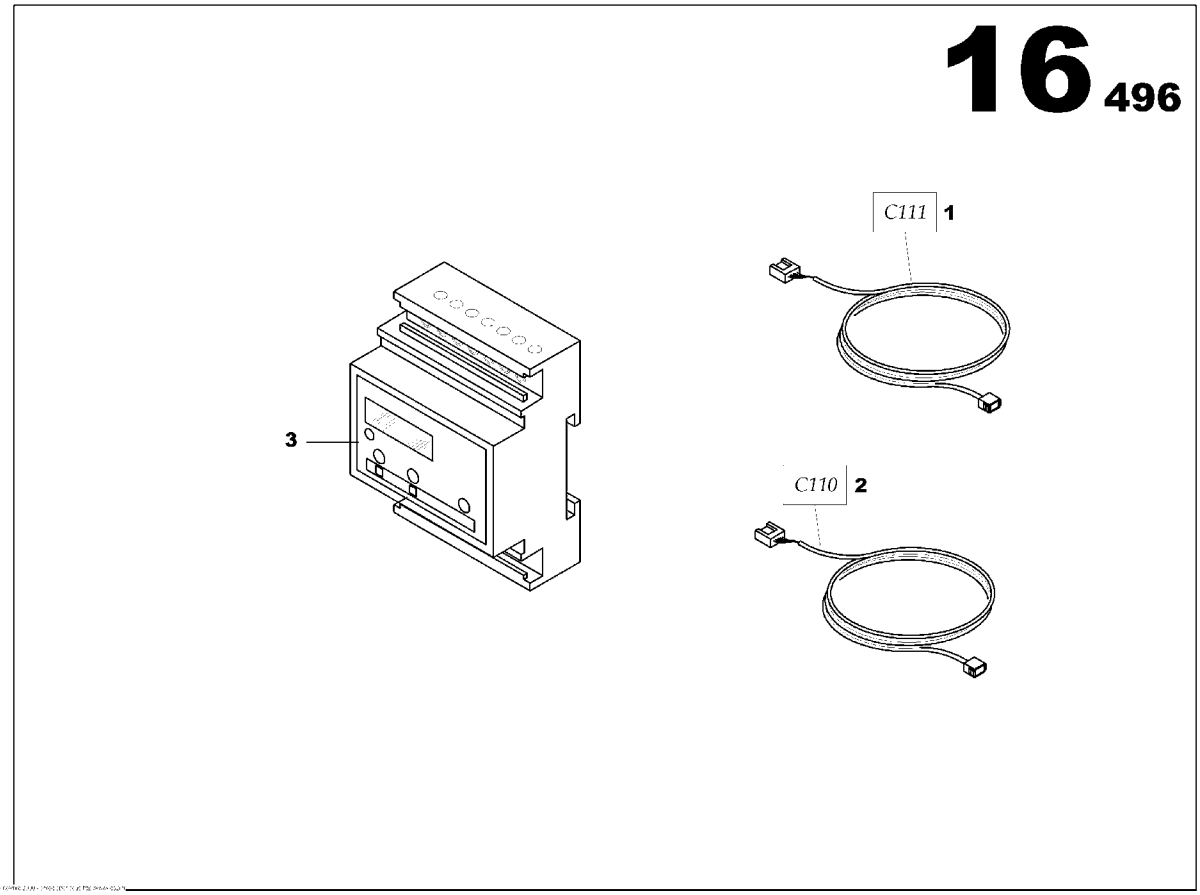

CURRENT SENSOR OPTION
85636249

Part numbers listed are only parts used in this model

Item	Part No.	Description	Qty	Un	From SN	To SN	Order PN	Page
1	85630663	WIRING LOOM C111 L800	1	UN			85630663	
2	85630721	WIRING LOOM C110 L300	1	UN			85630721	
3	85623809	CURRENT SENSOR MODULE	1	UN			85623809	

CURRENT SENSOR OPTION

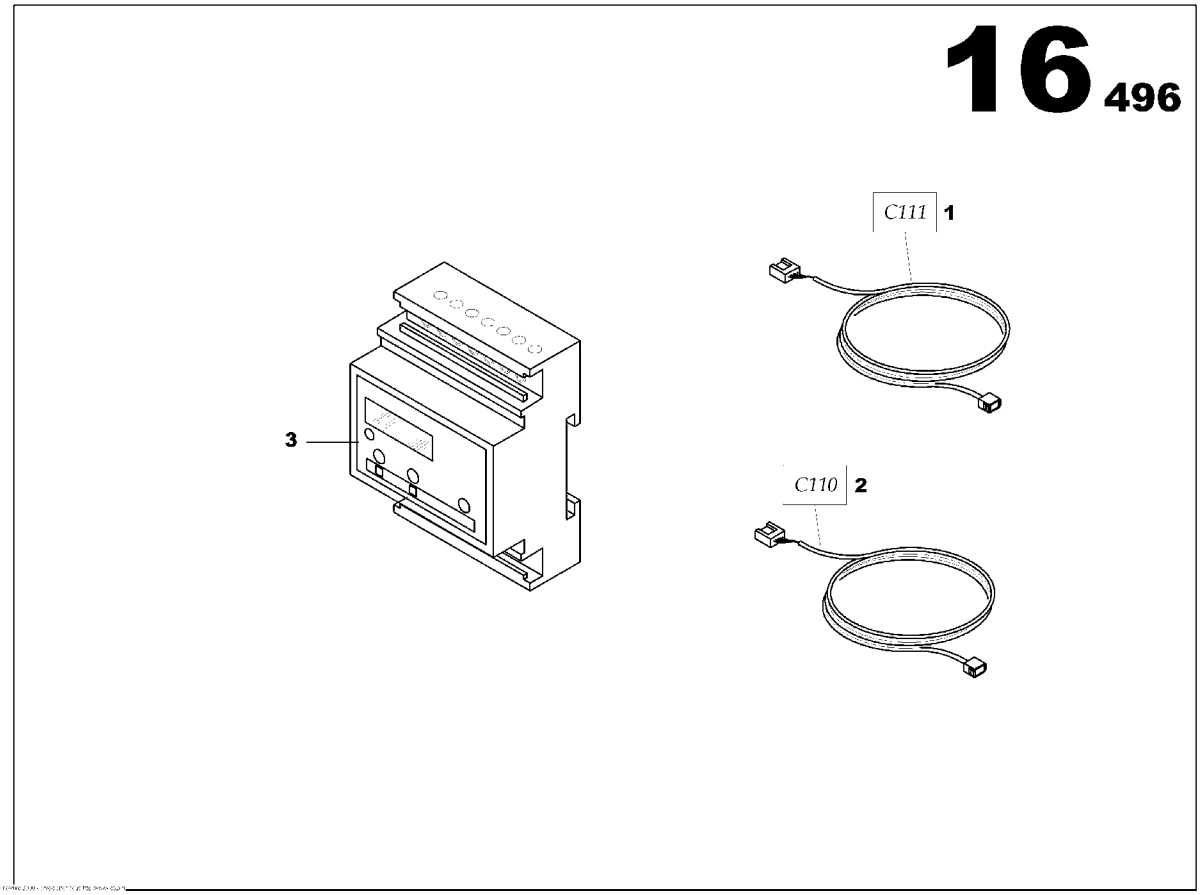

CURRENT SENSOR OPTION
85636249

Part numbers listed are only parts used in this model

Item	Part No.	Description	Qty	Un	From SN	To SN	Order PN	Page
1	85630663	WIRING LOOM C111 L800	1	UN			85630663	
2	85630721	WIRING LOOM C110 L300	1	UN			85630721	
3	85623809	CURRENT SENSOR MODULE	1	UN			85623809	

S2500 DASHBOARD OPTION

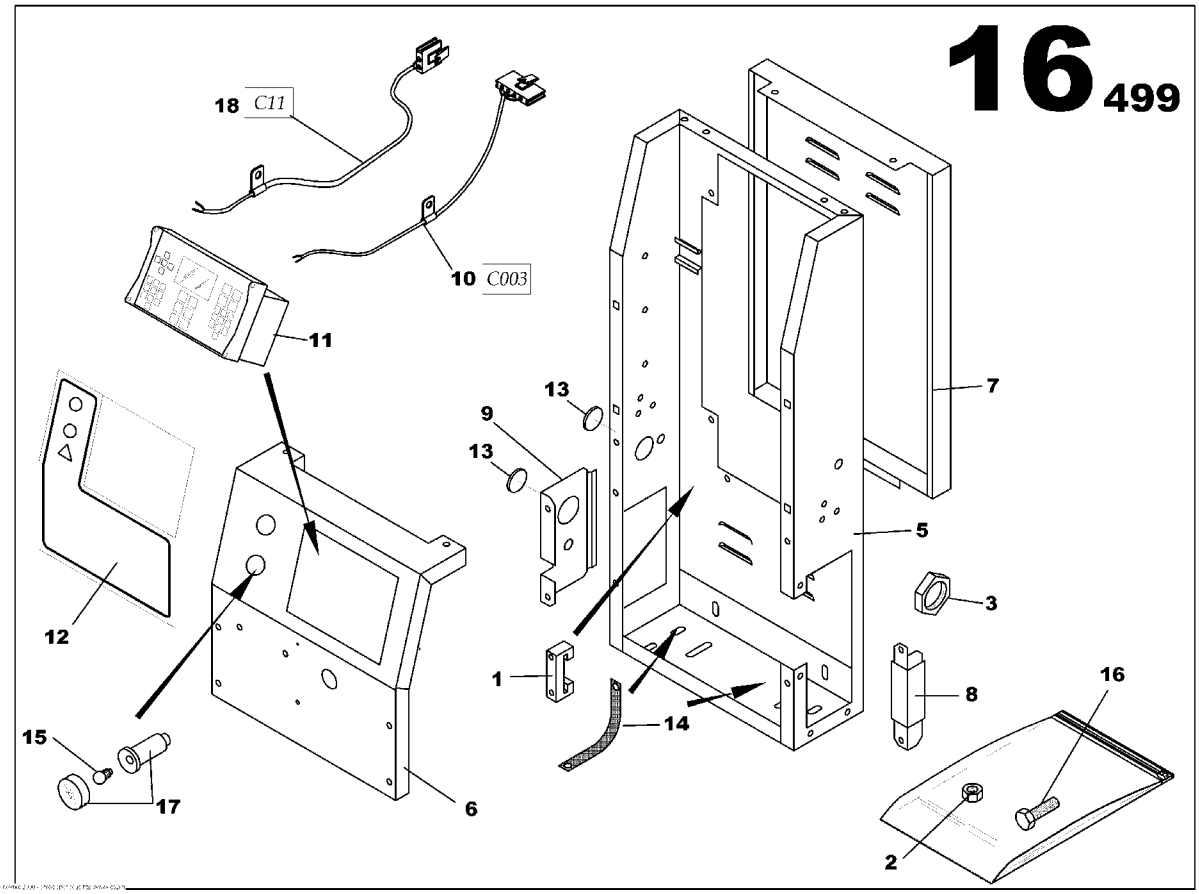

S2500 DASHBOARD OPTION
85636272

Part numbers listed are only parts used in this model

Item	Part No.	Description	Qty	Un	From SN	To SN	Order PN	Page
1	85634715	CONTROL PANEL SHEET METAL ASSEMBLY	1	UN			85634715	225
1	85408854	STOP	3	UN			85408854	
2	85408656	NUT M5	1	UN			85408656	
2	85636298	CONTROL PANEL ASSEMBLY	1	UN			85636298	227
3	85413276	GLAND NUT SCREW PG11	1	UN			85413276	
3	85636595	PLASTIC PLATE S2500 ASSEMBLY	1	UN			85636595	229
5	85636835	CONTROL PANEL S2500 HOUSING	1	UN			85636835	
6	85636843	CONTROL PANEL S2500 HOUSING	1	UN			85636843	
7	85636850	REAR CLOSURE CONTROL PANEL	1	UN			85636850	
8	85636868	SUPPORT PANEL	1	UN			85636868	
9	85635027	CABLE OUTLET PLATE	1	UN			85635027	
10	85504017	INTELLISYSTM WIRING LOOM 003	1	UN			85504017	
11	85623668	INTELLISYSTM DISPLAY *-IR PLATE SOFT 1.2*	1	UN			85627495	
12	85636587	PLASTIC PLATE L235xh245	1	UN			85636587	
13	85408391	RUBBER GROMMET D47	2	UN			85408391	
14	85505543	GROUND WIRES 16mm2	2	UN			85505543	
15	85402519	LAMP 12V BA9S TYPE	1	UN			85402519	
16	85636389	SCREW H M6x16	10	UN			85636389	
17	85503522	PANEL LIGHT CYLINDRIC D22	1	UN			85503522	
18	85504025	WIRING LOOM C11 L460	1	UN			85504025	

S2500 DASHBOARD OPTION

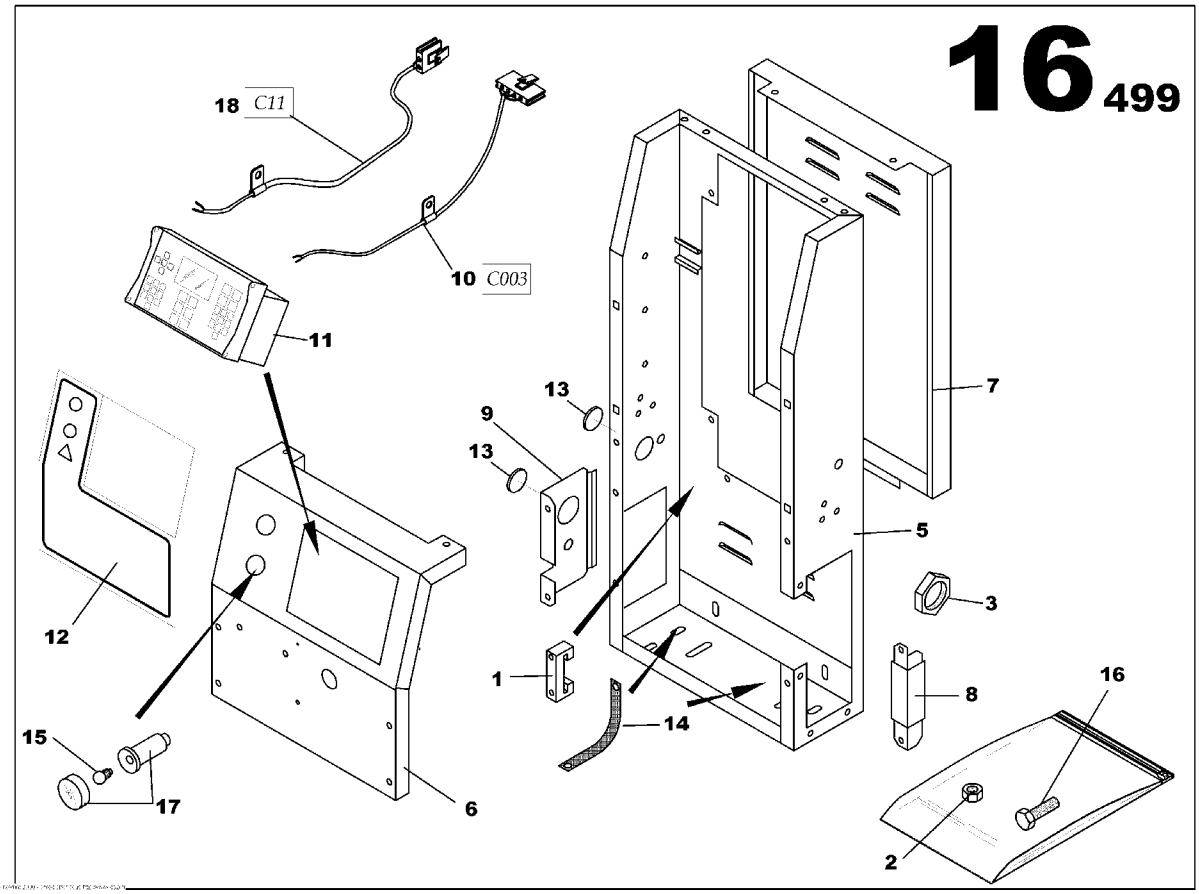

S2500 DASHBOARD OPTION
85636272

Part numbers listed are only parts used in this model

Item	Part No.	Description	Qty	Un	From SN	To SN	Order PN	Page
1	85634715	CONTROL PANEL SHEET METAL ASSEMBLY	1	UN			85634715	225
1	85408854	STOP	3	UN			85408854	
2	85408656	NUT M5	1	UN			85408656	
2	85636298	CONTROL PANEL ASSEMBLY	1	UN			85636298	227
3	85413276	GLAND NUT SCREW PG11	1	UN			85413276	
3	85636595	PLASTIC PLATE S2500 ASSEMBLY	1	UN			85636595	229
5	85636835	CONTROL PANEL S2500 HOUSING	1	UN			85636835	
6	85636843	CONTROL PANEL S2500 HOUSING	1	UN			85636843	
7	85636850	REAR CLOSURE CONTROL PANEL	1	UN			85636850	
8	85636868	SUPPORT PANEL	1	UN			85636868	
9	85635027	CABLE OUTLET PLATE	1	UN			85635027	
10	85504017	INTELLISYSTM WIRING LOOM 003	1	UN			85504017	
11	85623668	INTELLISYSTM DISPLAY *-IR PLATE SOFT 1.2*	1	UN			85627495	
12	85636587	PLASTIC PLATE L235xh245	1	UN			85636587	
13	85408391	RUBBER GROMMET D47	2	UN			85408391	
14	85505543	GROUND WIRES 16mm2	2	UN			85505543	
15	85402519	LAMP 12V BA9S TYPE	1	UN			85402519	
16	85636389	SCREW H M6x16	10	UN			85636389	
17	85503522	PANEL LIGHT CYLINDRIC D22	1	UN			85503522	
18	85504025	WIRING LOOM C11 L460	1	UN			85504025	

CONTROL PANEL SHEET METAL ASSEMBLY

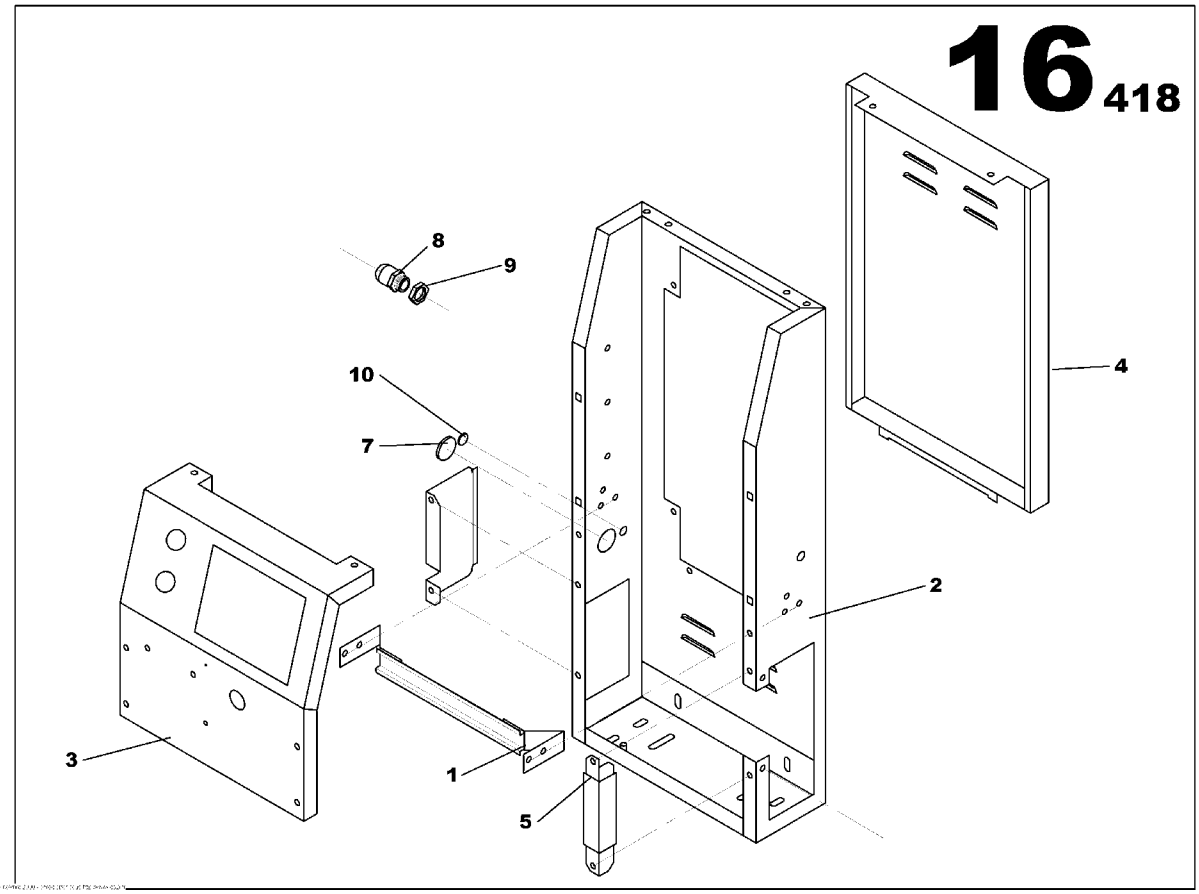

CONTROL PANEL SHEET METAL ASSEMBLY
85634715

Part numbers listed are only parts used in this model

Item	Part No.	Description	Qty	Un	From SN	To SN	Order PN	Page
1	85634632	ELECTRIC DIN RAIL	1	UN			85634632	
2	85634665	CONTROL PANEL S2500 HOUSING	1	UN			85634665	
3	85634673	CONTROL PANEL BRACKET	1	UN			85634673	
4	85634681	REAR CLOSURE PANEL S2500 CONTROL PANEL	1	UN			85634681	
5	85634699	SUPPORT PANEL S2500 CONTROL PANEL	1	UN			85634699	
6	85635027	CABLE OUTLET PLATE	1	UN			85635027	
7	85408391	RUBBER GROMMET D47	2	UN			85408391	
8	85635894	GLAND NUT PG13	1	UN			85635894	
9	85635902	PG13 NUT	1	UN			85635902	
10	85636694	RUBBER GROMMET D15	1	UN			85636694	

CONTROL PANEL ASSEMBLY

CONTROL PANEL ASSEMBLY
85636298

Part numbers listed are only parts used in this model

Item	Part No.	Description	Qty	Un	From SN	To SN	Order PN	Page

PLASTIC PLATE S2500 ASSEMBLY

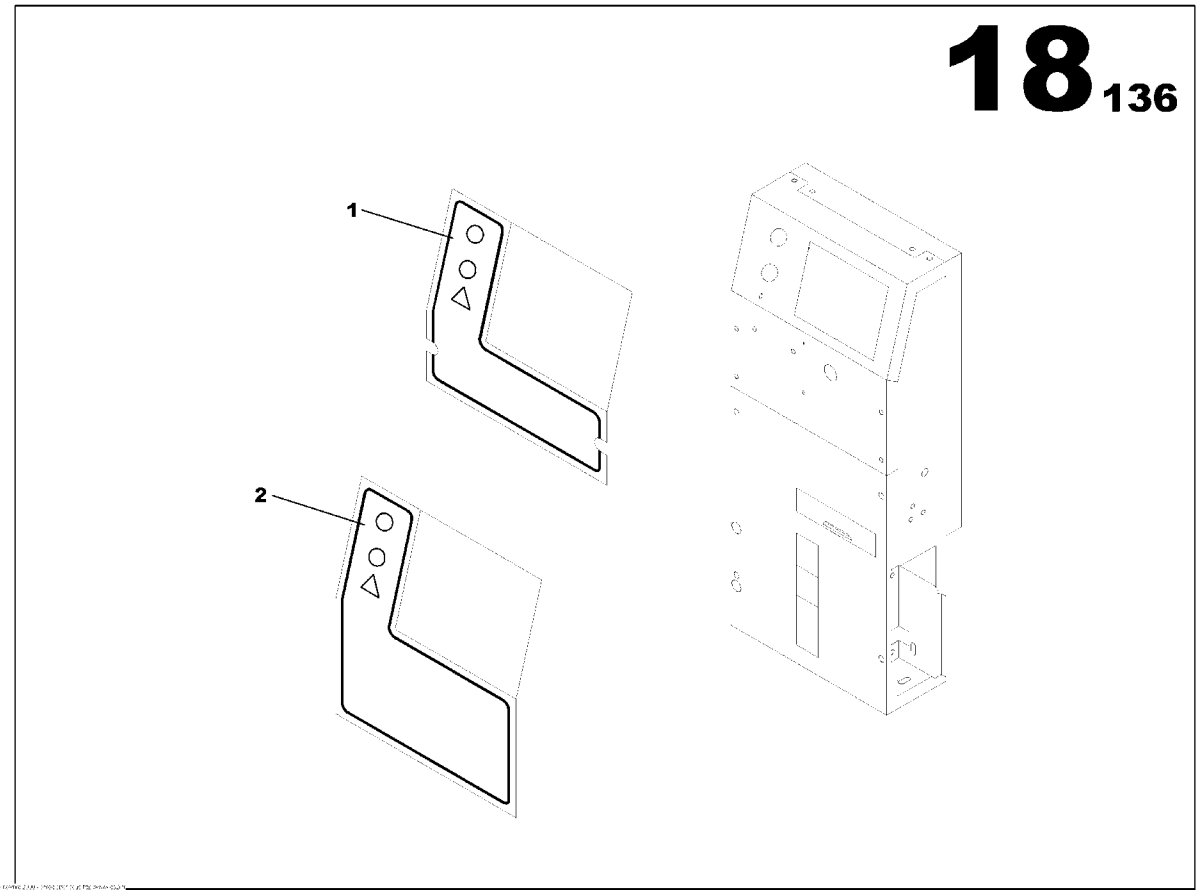

PLASTIC PLATE S2500 ASSEMBLY
85636595

Part numbers listed are only parts used in this model

Item	Part No.	Description	Qty	Un	From SN	To SN	Order PN	Page
1	85636587	PLASTIC PLATE L235xh245	1	UN			85636587	
2	85636611	PLASTIC PLATE L235xh325	1	UN			85636611	

TELYS 016 WIRING LOOM ASSEMBLY JD 6081

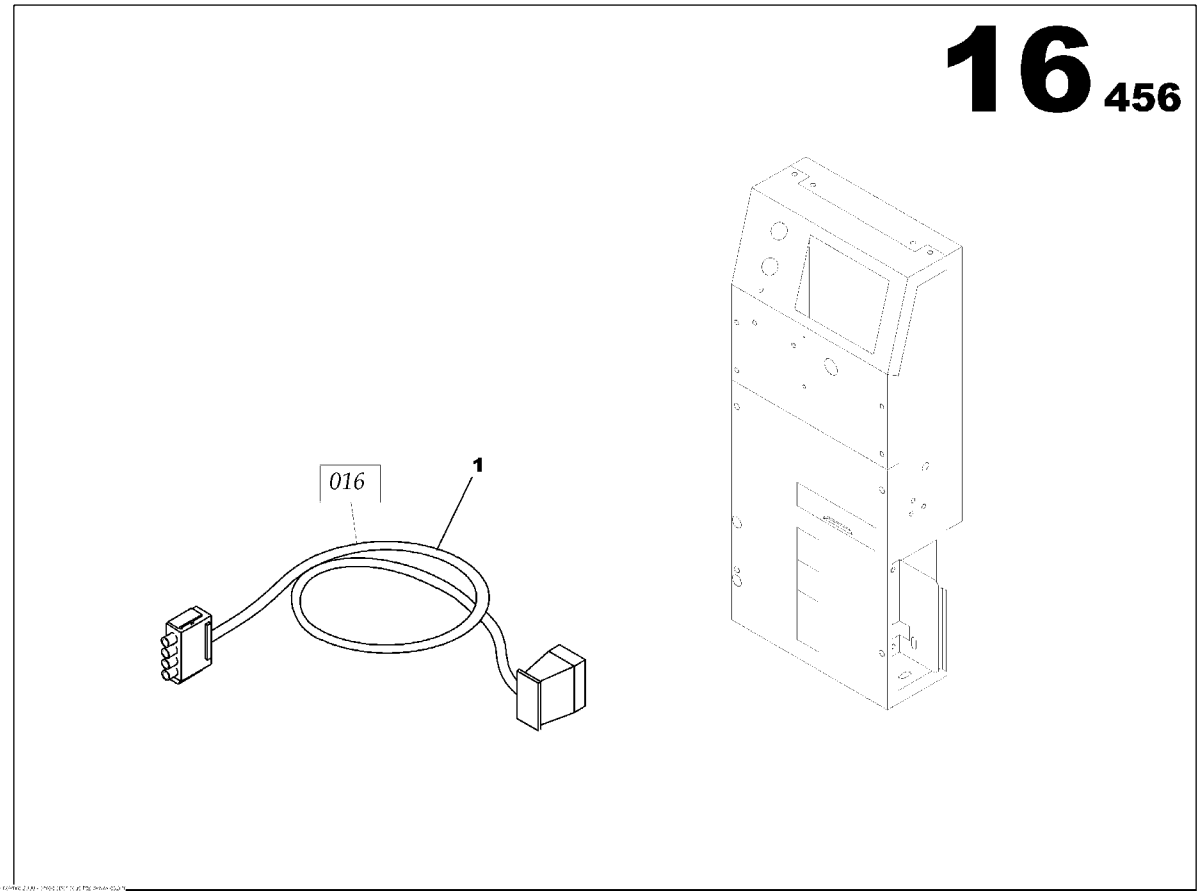

TELYS 016 WIRING LOOM ASSEMBLY JD 6081
85635399

Part numbers listed are only parts used in this model

Item	Part No.	Description	Qty	Un	From SN	To SN	Order PN	Page
1	85635316	INTELLISYSTM WIRING LOOM 016	1	UN	02009106		85635316	

AUXILIARY CONTACT ASSEMBLY

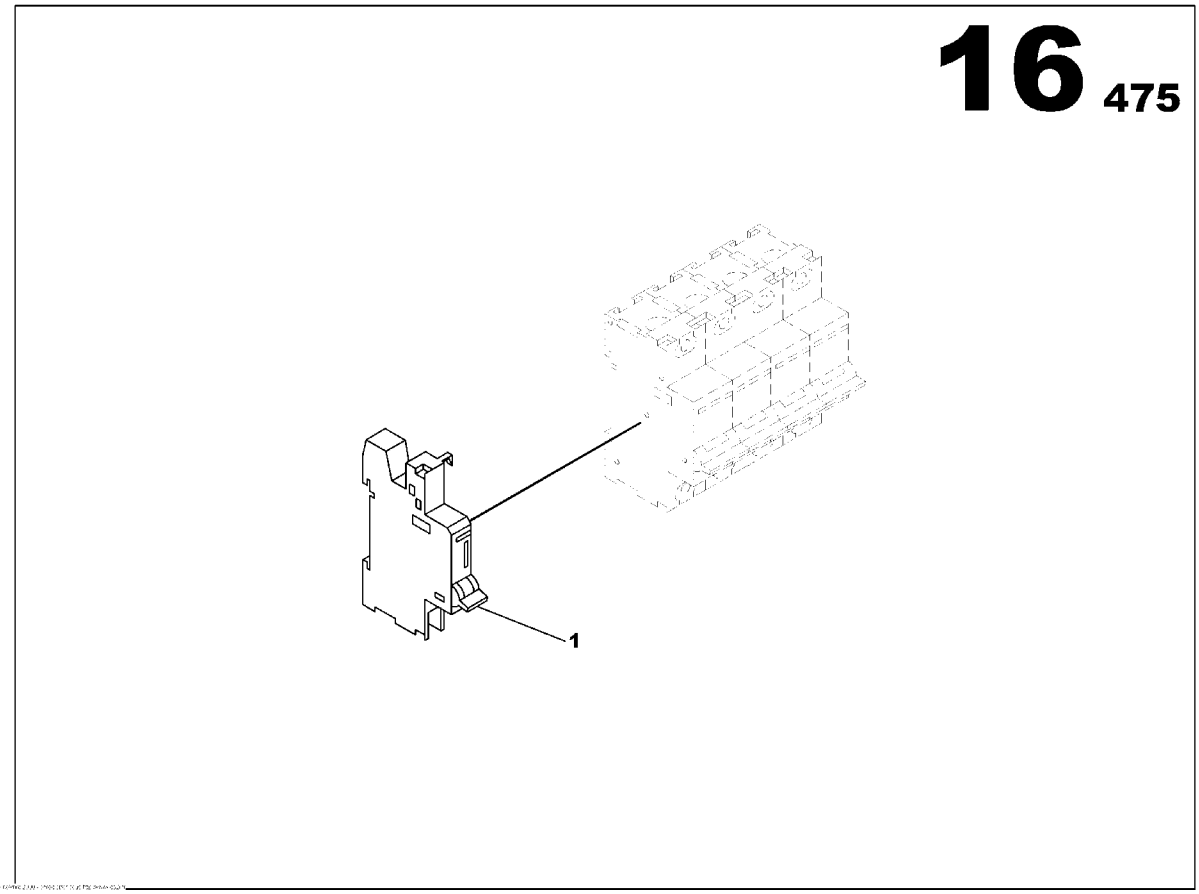

AUXILIARY CONTACT ASSEMBLY
85635845

Part numbers listed are only parts used in this model

Item	Part No.	Description	Qty	Un	From SN	To SN	Order PN	Page
1	85496222	AUXILARY CONTACT	1	UN			85496222	

ENGINE ELECTRONIC REGULATION OPTION

Non illustré
Not illustrated

ENGINE ELECTRONIC REGULATION OPTION

Part numbers listed are only parts used in this model

Item	Part No.	Description	Qty	Un	From SN	To SN	Order PN	Page
1	85401040	ELECTRONIC ACTUATOR	1	UN			85401040	237
2	17130212	ELECTRONIC REGULATION ASSEMBLY	1	UN			17130212	239

ELECTRONIC ACTUATOR

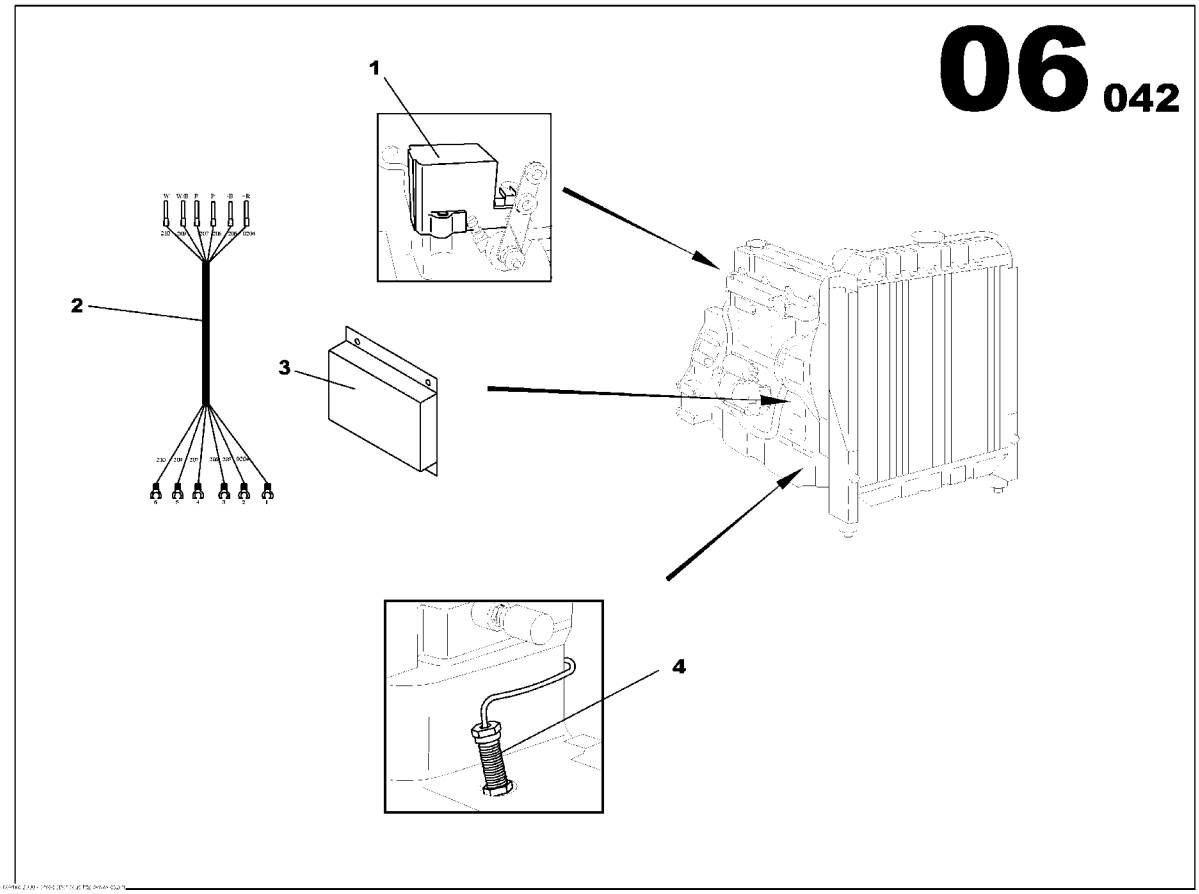

ELECTRONIC ACTUATOR
85401040

Part numbers listed are only parts used in this model

Item	Part No.	Description	Qty	Un	From SN	To SN	Order PN	Page
1	85403616	ELECTRONIC ACTUATOR	1	UN			85403616	
3	17130204	SPEED ELECTRONIC GOVERNOR 12VCC	1	UN	03012817		17130204	
4	85403632	MAGNETIC SPEED SENSOR L75 3/4UNF	1	UN			85403632	

ELECTRONIC REGULATION ASSEMBLY

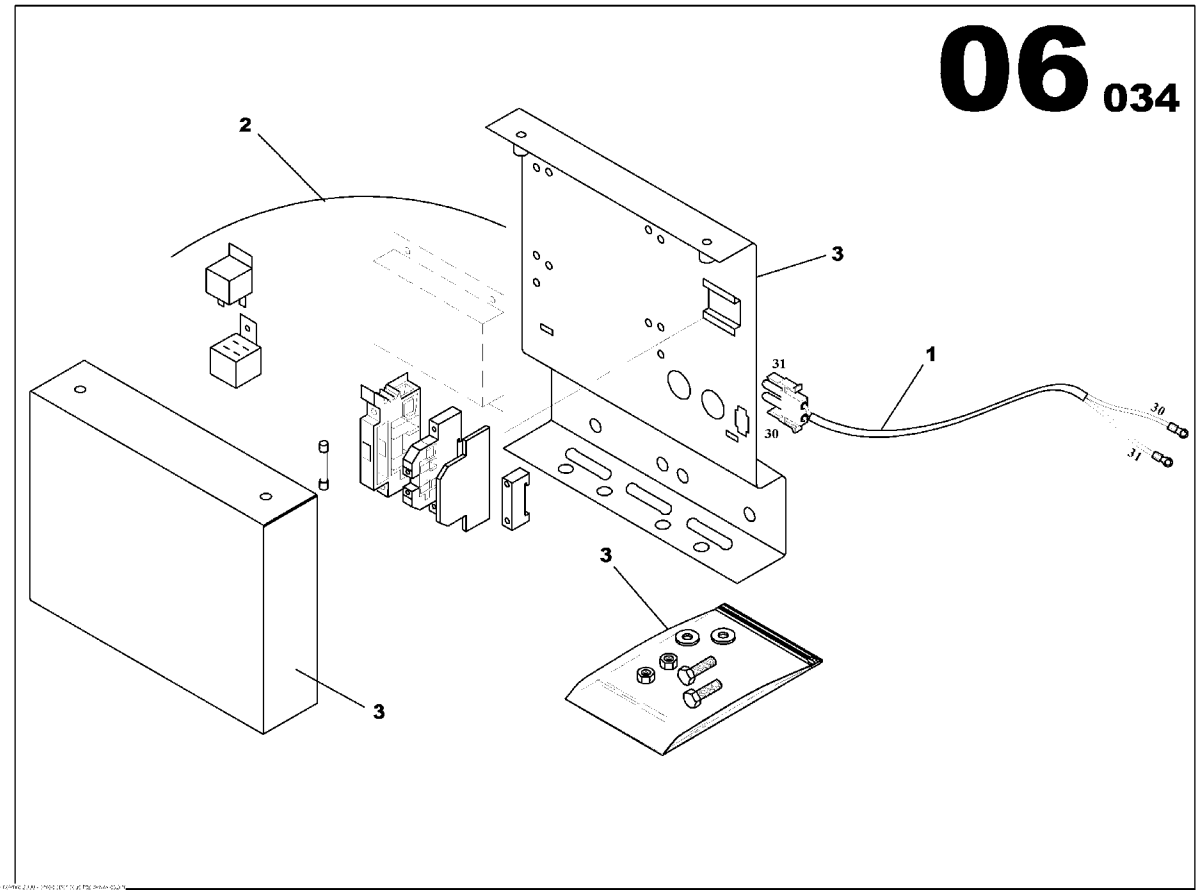

ELECTRONIC REGULATION ASSEMBLY
17130212

Part numbers listed are only parts used in this model

Item	Part No.	Description	Qty	Un	From SN	To SN	Order PN	Page
1	17130469	ELECTRONIC REGULATION ASSEMBLY	1	UN			17130469	247
2	85637445	ELECTRONIC REGULATION ASSEMBLY	1	UN			85637445	245
3	85637437	ELECTRONIC REGULATION ASSEMBLY	1	UN			85637437	241

ELECTRONIC REGULATION ASSEMBLY

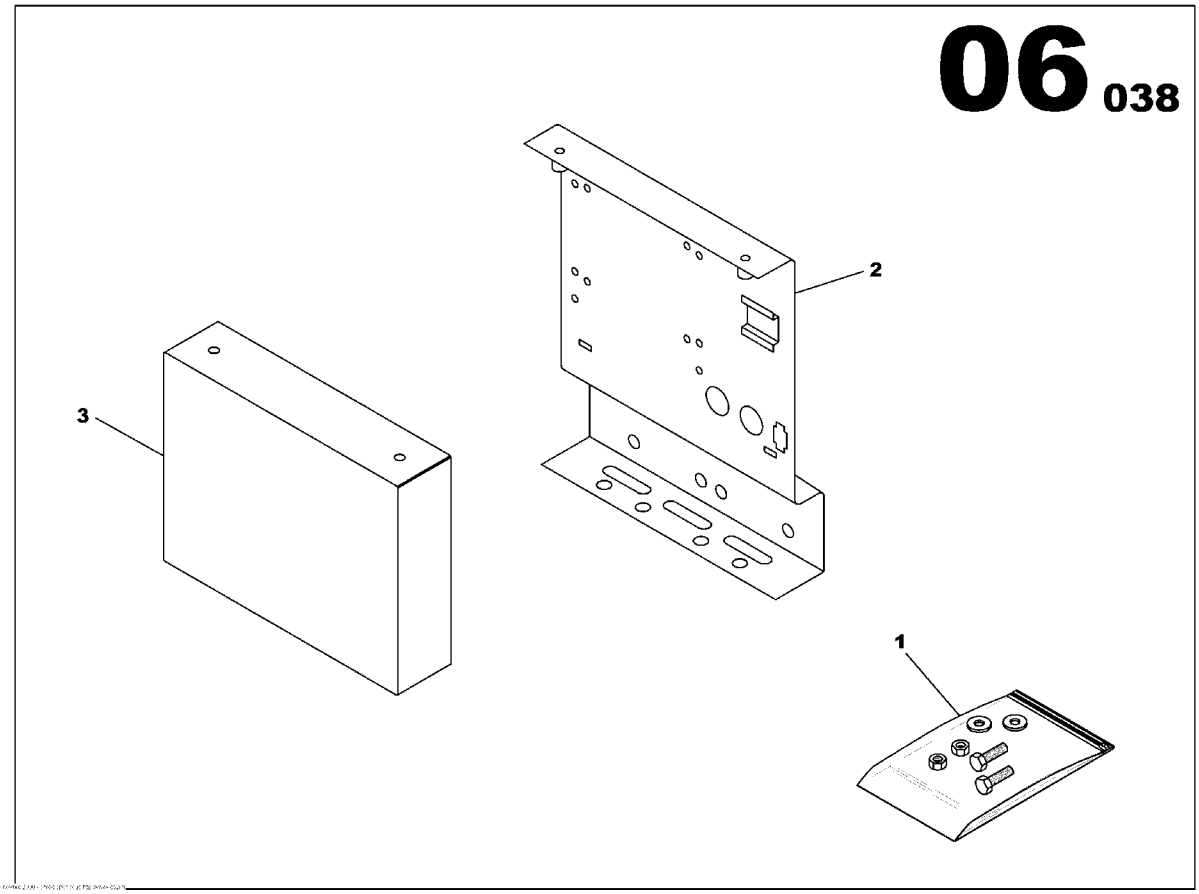

ELECTRONIC REGULATION ASSEMBLY
85637437

Part numbers listed are only parts used in this model

Item	Part No.	Description	Qty	Un	From SN	To SN	Order PN	Page
1	85639425	SCREWS ASSEMBLY	1	UN			85639425	243
2	85638377	REGULATOR BRACKET	1	UN			85638377	
3	85638385	REGULATOR HOUSING COVER	1	UN			85638385	

SCREWS ASSEMBLY

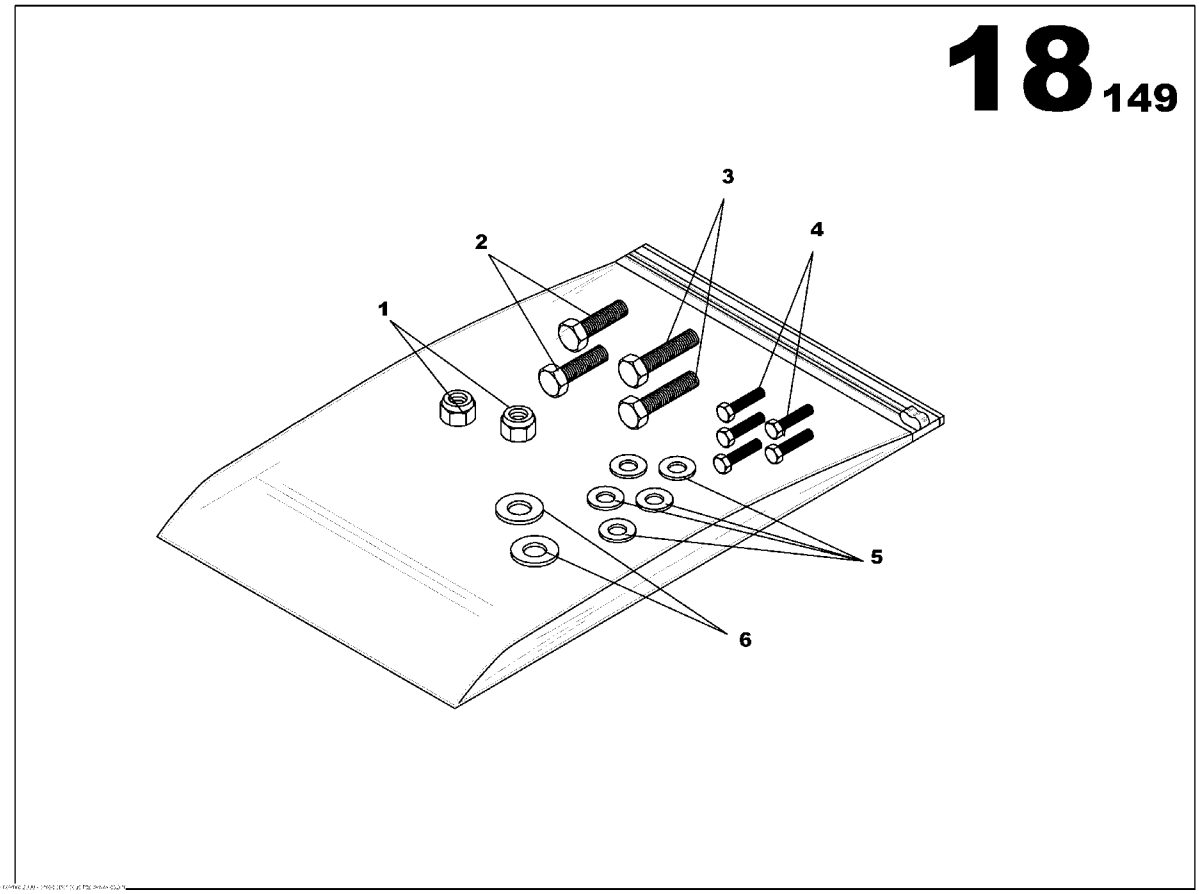

SCREWS ASSEMBLY
85639425

Part numbers listed are only parts used in this model

Item	Part No.	Description	Qty	Un	From SN	To SN	Order PN	Page
1	85430585	NUT M10	2	UN			85430585	
2	85636389	SCREW H M6x16	2	UN			85636389	
3	85631547	SCREW H M10x25	2	UN			85631547	
4	17131160	SCREW H M5x16	5	UN			17131160	
5	85429967	WASHER 5x12	5	UN			85429967	
6	85429728	WASHER D10x22	2	UN			85429728	

ELECTRONIC REGULATION ASSEMBLY

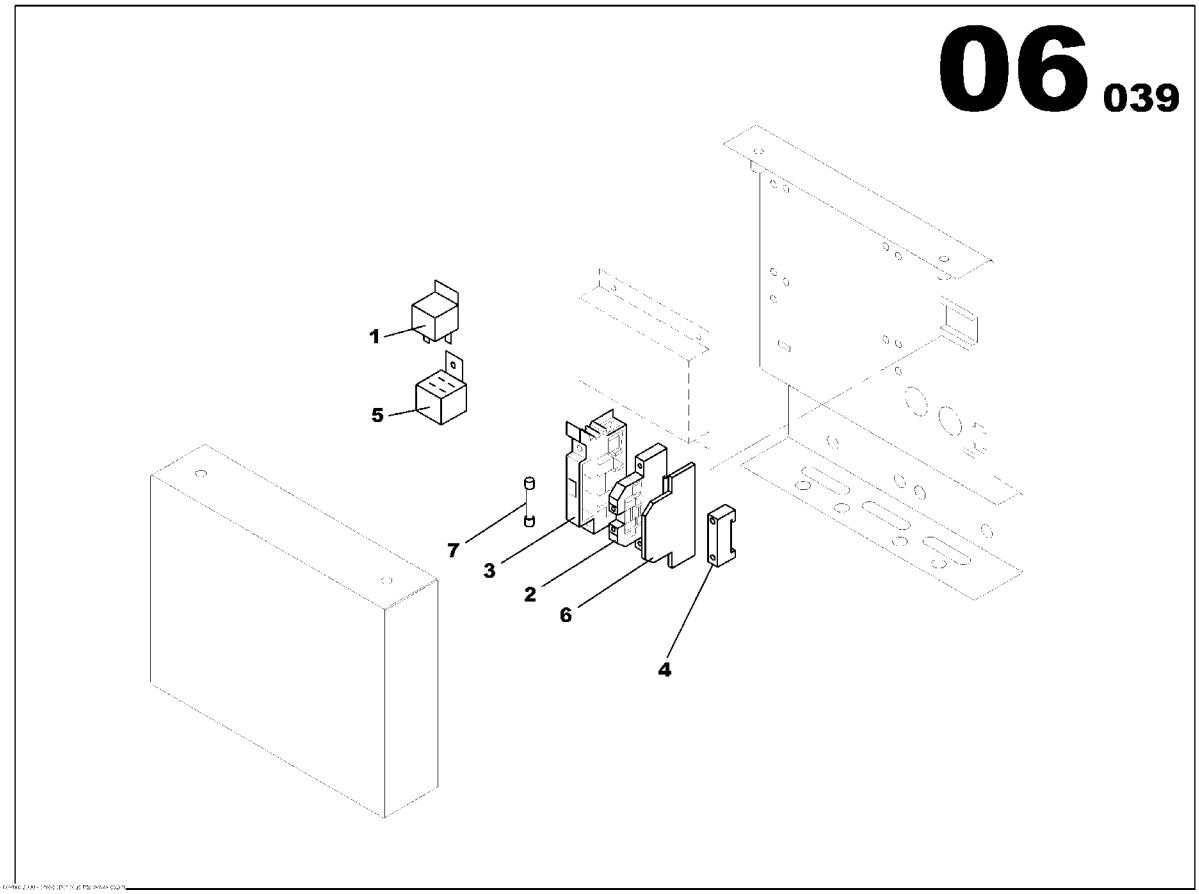

ELECTRONIC REGULATION ASSEMBLY
85637445

Part numbers listed are only parts used in this model

Item	Part No.	Description	Qty	Un	From SN	To SN	Order PN	Page
1	85408896	RELAY 12V 20/30A	1	UN			85408896	
2	85412542	TERMINAL BLOCK	1	UN			85412542	
3	17130006	FUSE HOUSING TERMINAL BLOCK	1	UN			17130006	
4	85408706	STOP	1	UN			85408706	
5	85408912	AUTOMOBILE RELAY BASE	1	UN			85408912	
6	85639060	PLASTIC COVER TERMINAL BLOCK	1	UN			85639060	
7	85639045	FUSE CYLINDRICAL 15A	1	UN			85639045	

ELECTRONIC REGULATION ASSEMBLY

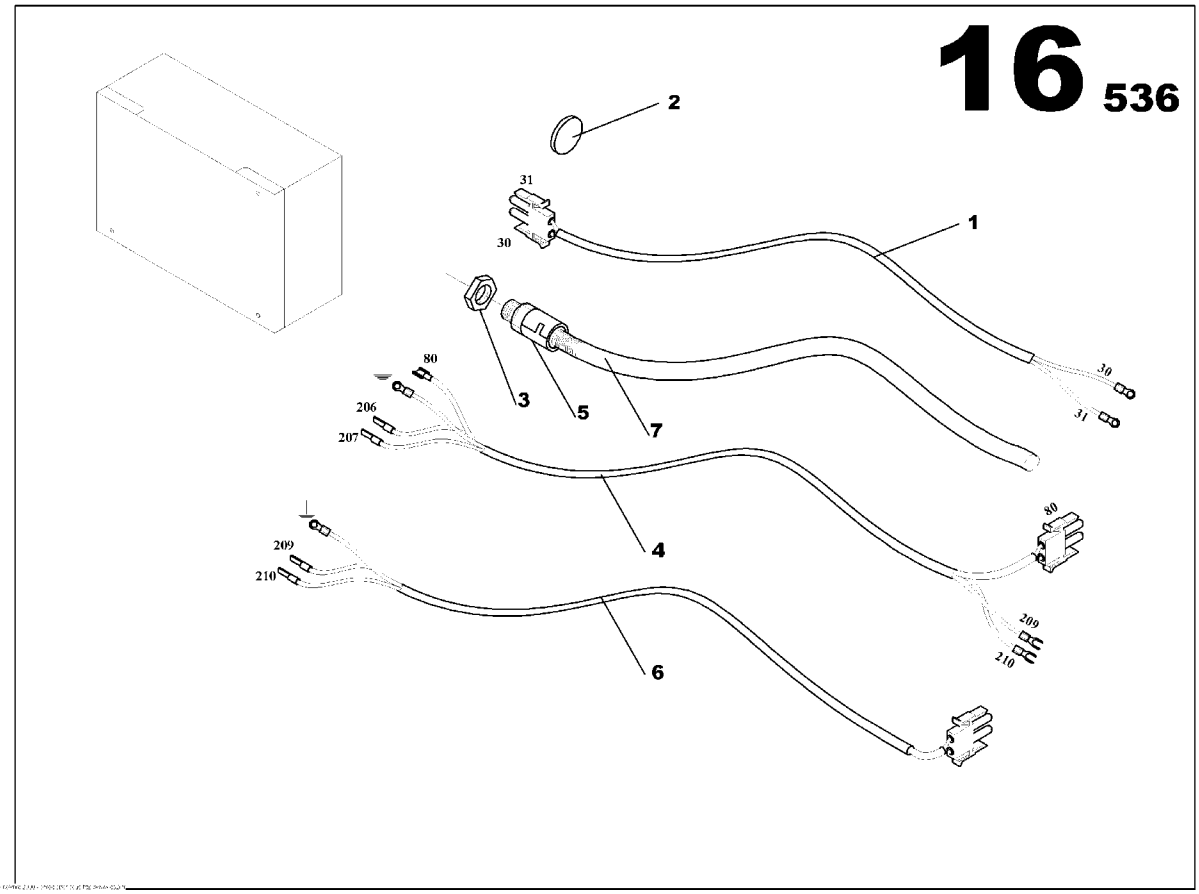

ELECTRONIC REGULATION ASSEMBLY
17130469

Part numbers listed are only parts used in this model

Item	Part No.	Description	Qty	Un	From SN	To SN	Order PN	Page
1	17130527	ELECTRONIC REGUL. SUPPLY WIRING LOOM L700-300-300	1	UN			17130527	
2	85415388	RUBBER GROMMET D22	1	UN			85415388	
3	85408664	GLAND NUT SCREW PG16	1	UN			85408664	
4	17130493	ELECTRONIC REGULATION CABLE 3x1.5mm2	1	UN			17130493	
5	85639052	PIPE UNION PG16	1	UN			85639052	
6	17130519	ELECTRONIC REGULATION CABLE 2x0.5mm2	1	UN			17130519	
7	85638708	ELECTRICAL SHAFT D19	0.5	ML			85638708	

ADJUSTABLE EARTH FAULT PROTECTION WITH INTELISYS

Non illustré
Not illustrated

ADJUSTABLE EARTH FAULT PROTECTION WITH INTELISYS

Part numbers listed are only parts used in this model

Item	Part No.	Description	Qty	Un	From SN	To SN	Order PN	Page
1	17130733	EARTH LEAKAGE RELAY OPTION	1	UN			17130733	
2	85634855	POWER TERMINAL CONNECTIONS 50A ASSEMBLY	1	UN			85634855	251
3	85635738	RELEASE COIL ASSEMBLY	1	UN			85635738	257

POWER TERMINAL CONNECTIONS 50A ASSEMBLY

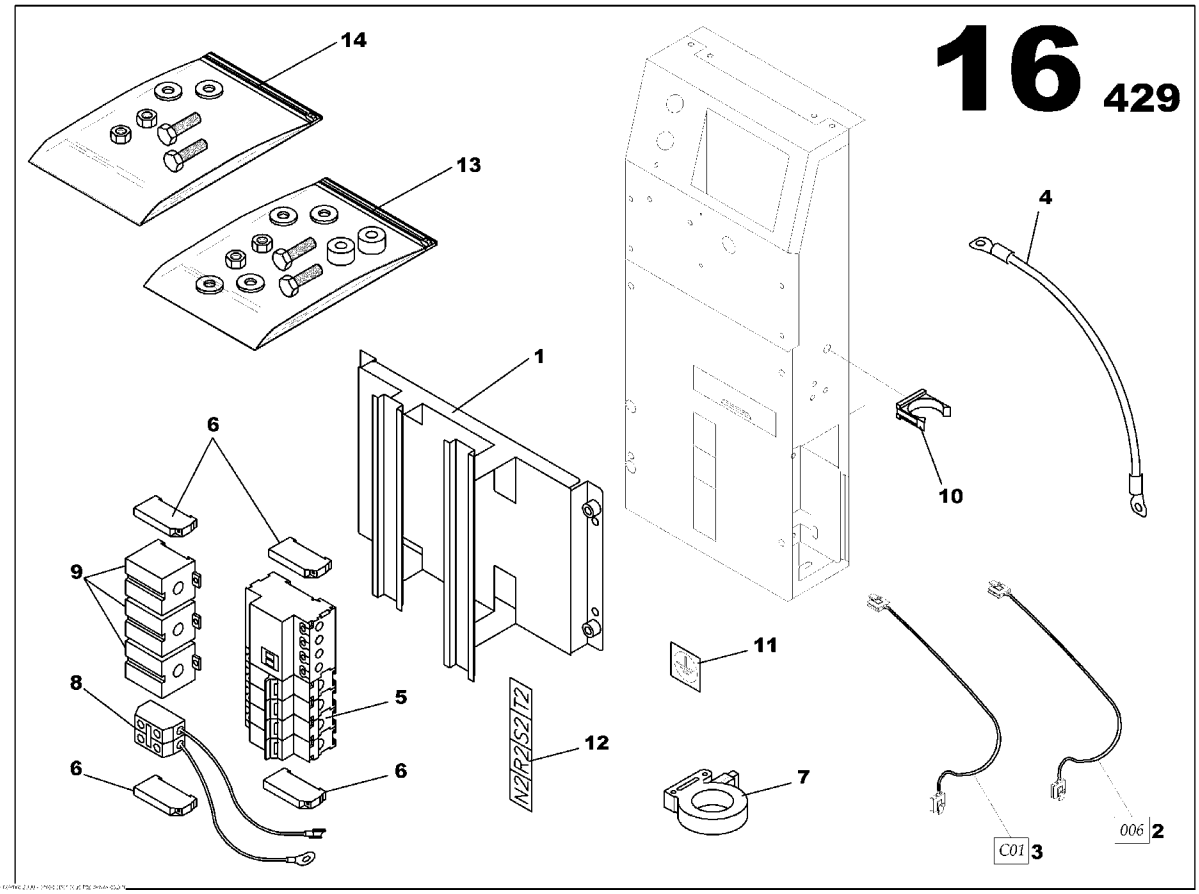

POWER TERMINAL CONNECTIONS 50A ASSEMBLY
85634855

Part numbers listed are only parts used in this model

Item	Part No.	Description	Qty	Un	From SN	To SN	Order PN	Page
1	85635019	CONTROL PANEL S2500 CIRCUIT BREAKER BRACKET	1	UN			85635019	
2	85635373	INTELLISYSTM WIRING LOOM 006	1	UN			85635373	
3	85635456	INTELLISYSTM WIRING LOOM 001	1	UN			85635456	
4	85635589	NEUTRAL/EARTH SYSTEM CABLE 16mm2 L150	1	UN			85635589	
5	85413193	MOULDED CASE CIRCUIT BREAKER 4x50A	1	UN			85413193	
6	85408706	STOP	4	UN			85408706	
7	85635886	TORE	1	UN			85635886	
8	85635944	TERMINAL JUNCTION	1	UN			85635944	
9	85632792	CURRENT TRANSFORMER 60/5	3	UN			85632792	
10	85636033	SHAFT BRACKET	1	UN			85636033	
11	85409084	STICKER EARTH SYMBOL	1	UN			85409084	
12	85409092	STICKER POWER LINK	1	UN			85409092	
13	85636439	SCREWS ASSEMBLY	1	UN			85636439	253
14	85636454	SCREWS ASSEMBLY	1	UN			85636454	255

SCREWS ASSEMBLY

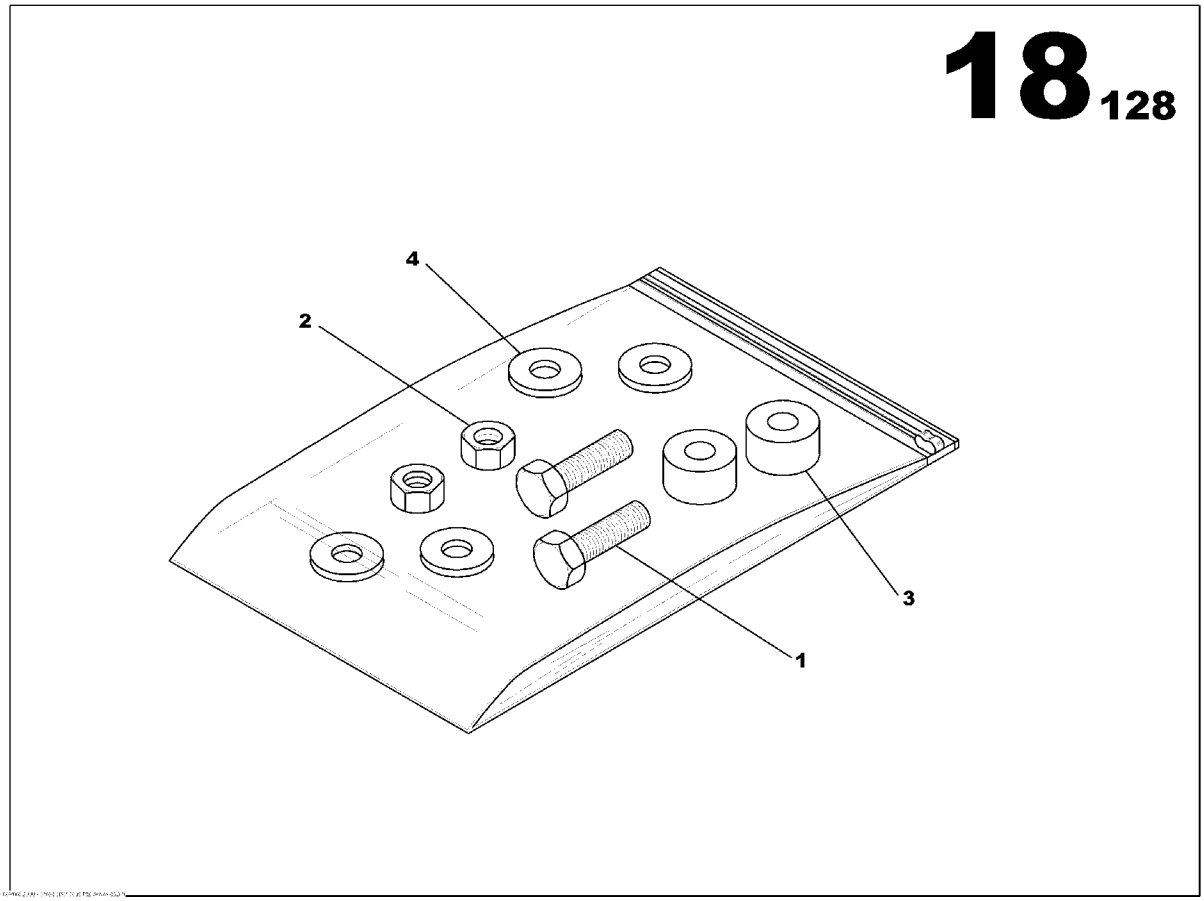

SCREWS ASSEMBLY
85636439

Part numbers listed are only parts used in this model

Item	Part No.	Description	Qty	Un	From SN	To SN	Order PN	Page
1	85636330	SCREW H M6x12	2	UN			85636330	
2	85507911	NUT M6	2	UN			85507911	
3	85636652	SPACER	2	UN			85636652	
4	85636744	WASHER 6x18	4	UN			85636744	

SCREWS ASSEMBLY

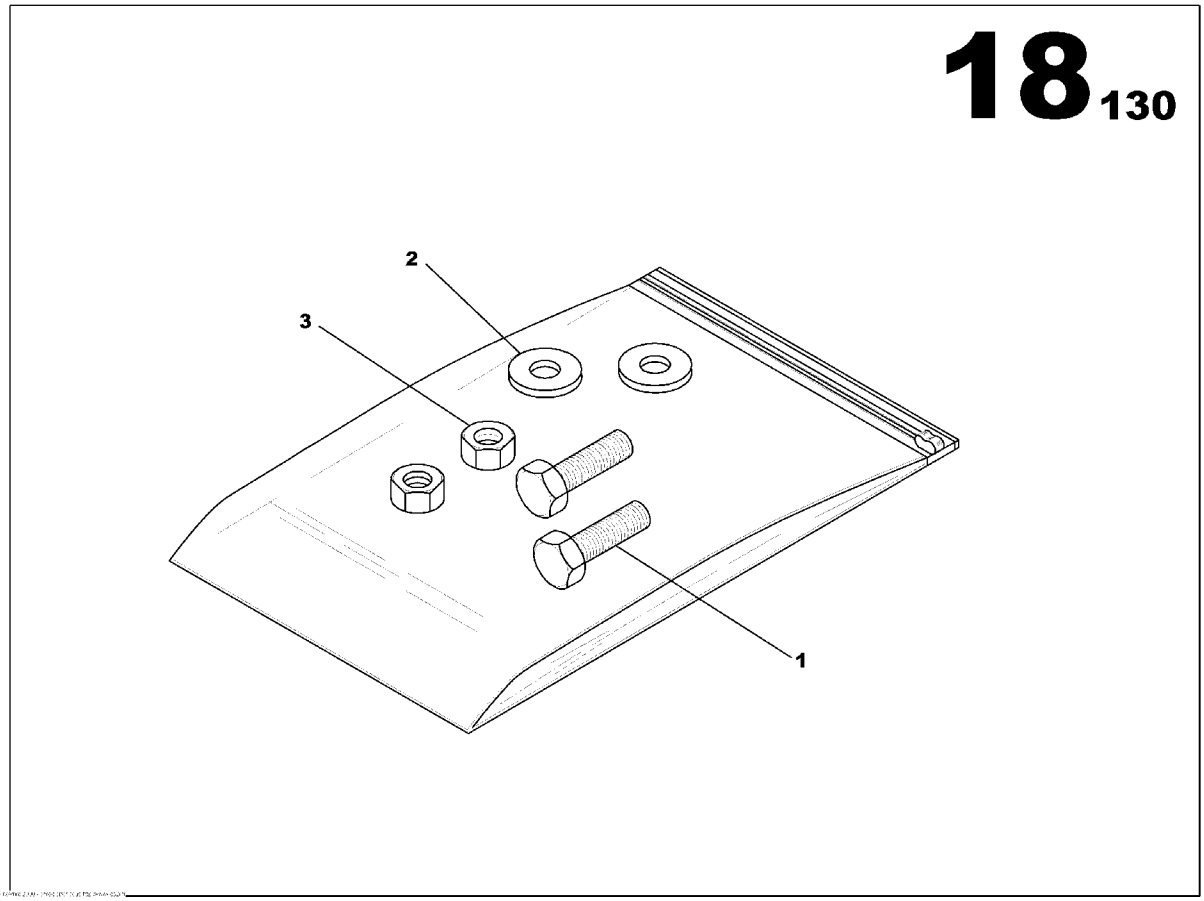

SCREWS ASSEMBLY
85636454

Part numbers listed are only parts used in this model

Item	Part No.	Description	Qty	Un	From SN	To SN	Order PN	Page
1	85636363	SCREW HS M4x16	2	UN			85636363	
2	85636728	WASHER 4x10	2	UN			85636728	
3	85429553	NUT M4	2	UN			85429553	

RELEASE COIL ASSEMBLY

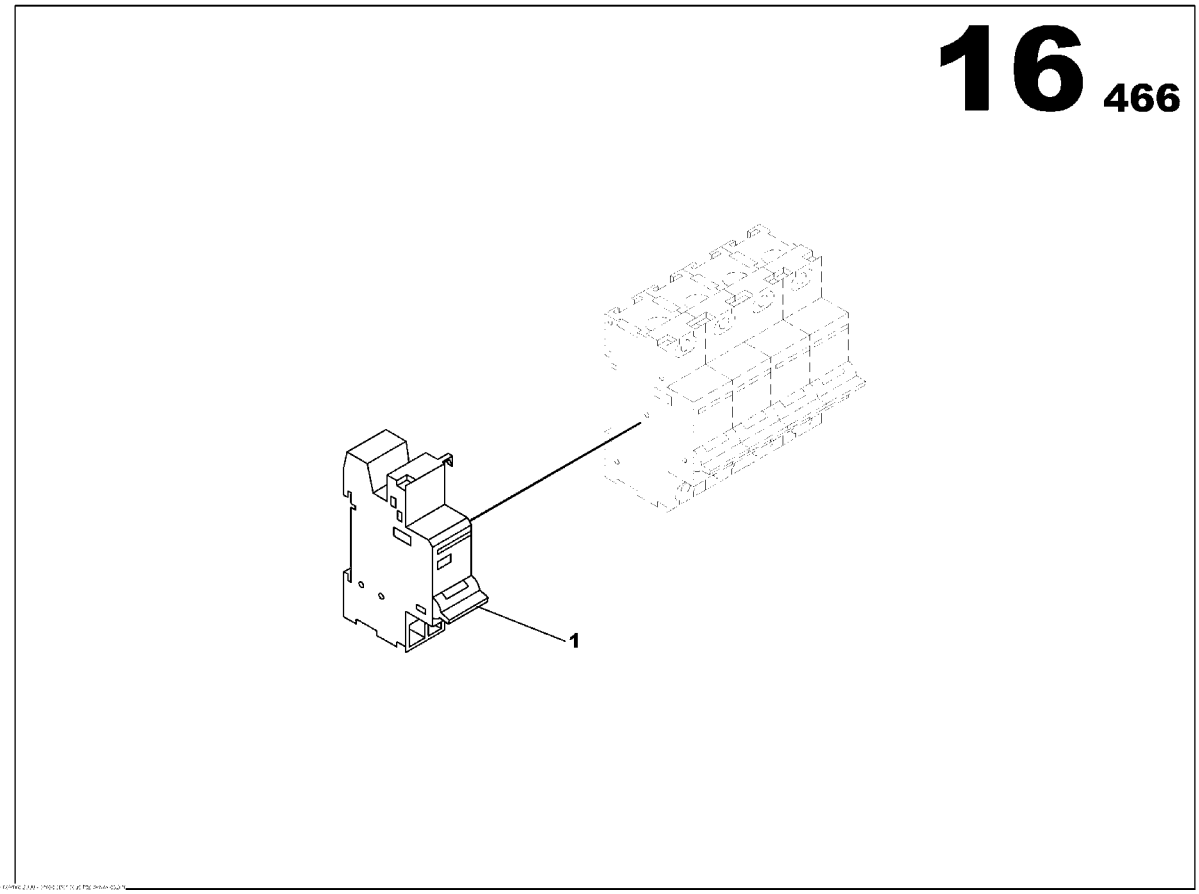

RELEASE COIL ASSEMBLY

85635738

Part numbers listed are only parts used in this model

Item	Part No.	Description	Qty	Un	From SN	To SN	Order PN	Page
1	85408516	CIRCUIT BREAKER SHUNT RELEASE COIL 220/415VAC	1	UN			85408516	

ADJUSTABLE EARTH FAULT PROTECTION WITH INTELISYS

Non illustré
Not illustrated

ADJUSTABLE EARTH FAULT PROTECTION WITH INTELISYS

Part numbers listed are only parts used in this model

Item	Part No.	Description	Qty	Un	From SN	To SN	Order PN	Page
1	85635225	TELYS 010 WIRING LOOM ASSEMBLY JD 6081	1	UN			85635225	261
2	85635340	ELECTRICAL SHAFT	1	UN			85635340	
3	85634616	EMERGENCY STOP PANEL ASSEMBLY	1	UN			85634616	263
4	85639599	DECALS TERMINAL BLOCK ASSEMBLY	1	UN			85639599	267
5	85411569	INTELLISYSTM OPTION CB CARD	1	UN			85411569	269
6	17130691	EARTH LEAKAGE RELAY OPTION	1	UN			17130691	275
7	85636272	S2500 DASHBOARD OPTION	1	UN			85636272	281
8	17130741	INTELLISYSTM PARAMETER OPTION	1	UN			17130741	
9	85635415	TELYS 035 WIRING LOOM ASSEMBLY JD 6081	1	UN			85635415	291
10	85634855	POWER TERMINAL CONNECTIONS 50A ASSEMBLY	1	UN			85634855	293
11	85635738	RELEASE COIL ASSEMBLY	1	UN			85635738	299

TELYS 010 WIRING LOOM ASSEMBLY JD 6081

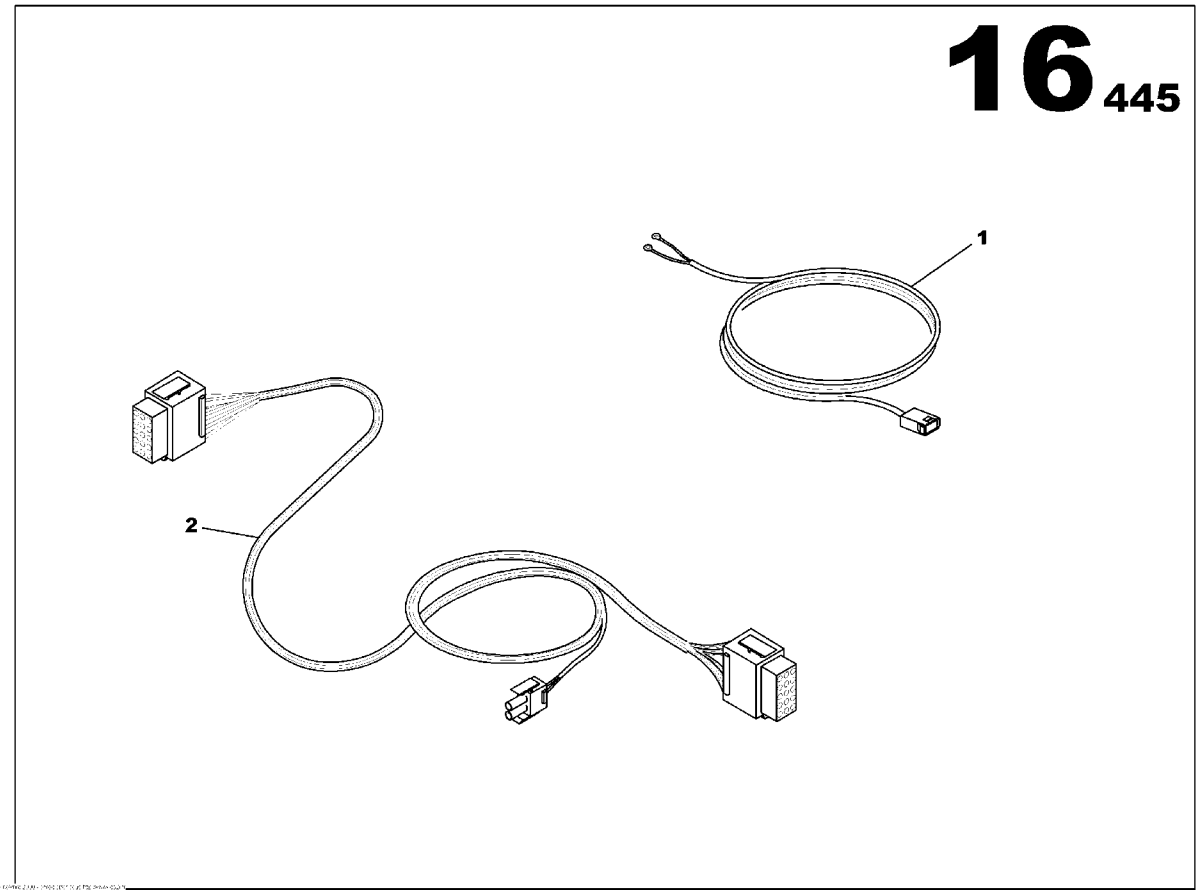

TELYS 010 WIRING LOOM ASSEMBLY JD 6081
85635225

Part numbers listed are only parts used in this model

Item	Part No.	Description	Qty	Un	From SN	To SN	Order PN	Page
1	85635183	INTELLISYSTM WIRING LOOM 010-BAT	1	UN			85635183	
2	85635209	INTELLISYSTM WIRING LOOM 010	1	UN			85635209	

EMERGENCY STOP PANEL ASSEMBLY

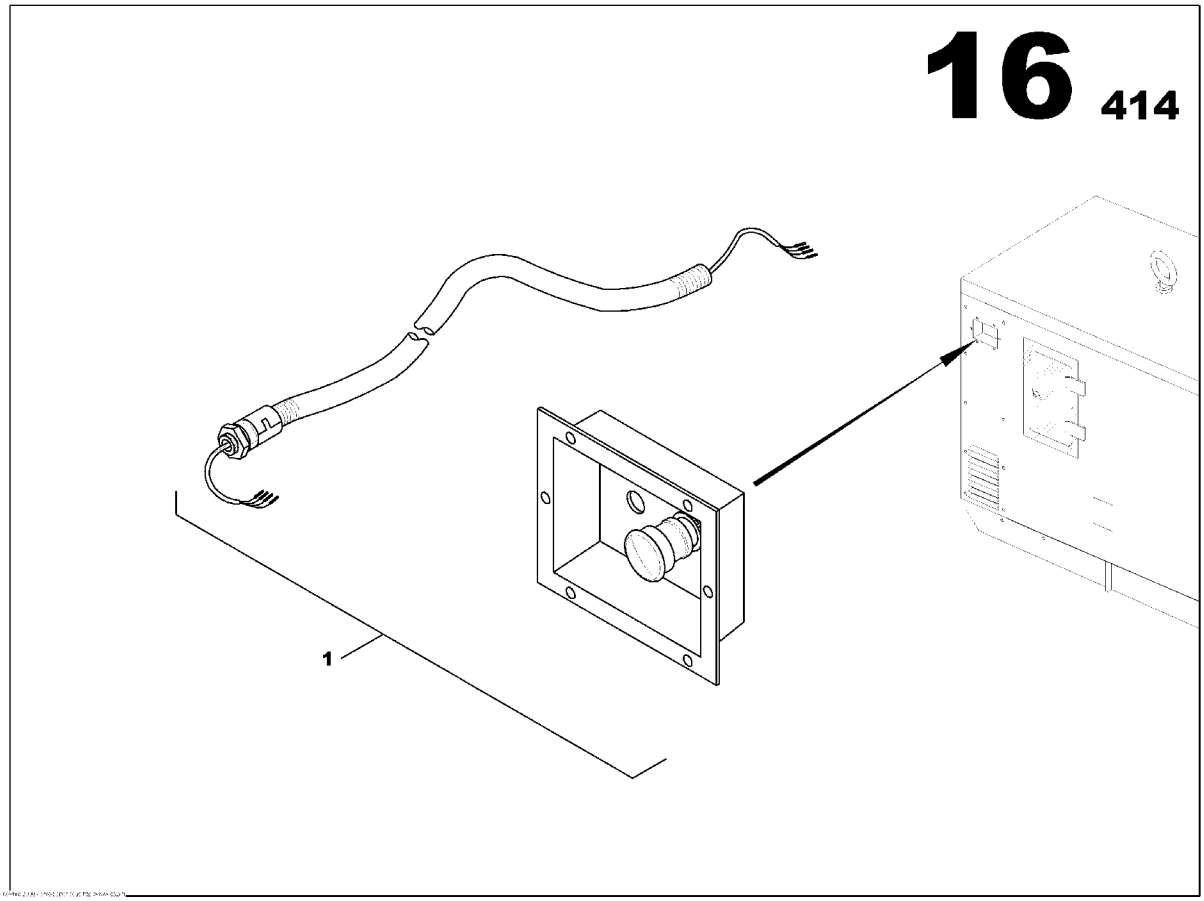

EMERGENCY STOP PANEL ASSEMBLY
85634616

Part numbers listed are only parts used in this model

Item	Part No.	Description	Qty	Un	From SN	To SN	Order PN	Page
1	85634624	EMERGENCY STOP PANEL ASSEMBLY	1	UN			85634624	265

EMERGENCY STOP PANEL ASSEMBLY

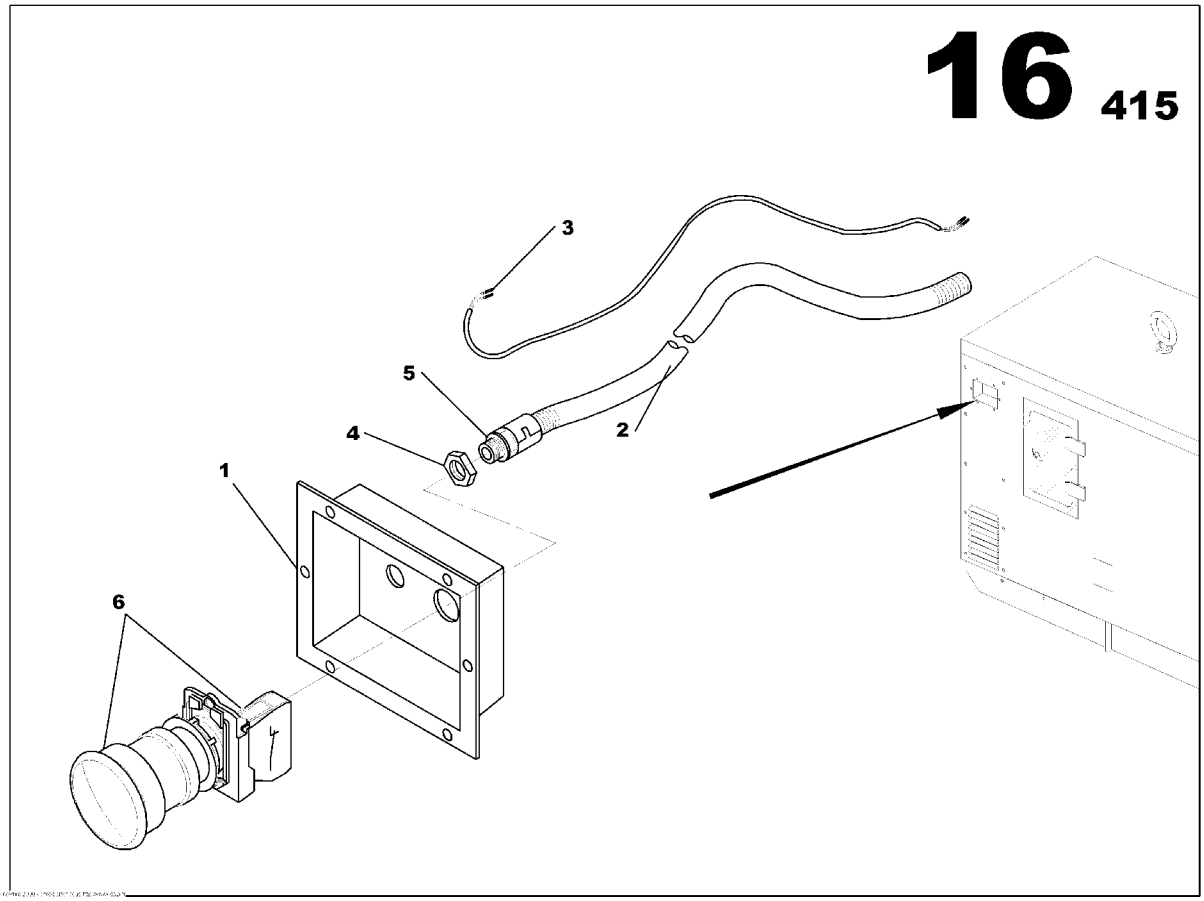

EMERGENCY STOP PANEL ASSEMBLY
85634624

Part numbers listed are only parts used in this model

Item	Part No.	Description	Qty	Un	From SN	To SN	Order PN	Page
1	85407294	EMERGENCY STOP PANEL	1	UN			85407294	
2	85635241	ELECTRICAL SHAFT D09	1.2	ML			85635241	
3	85635621	EMERGENCY STOP WIRING LOOM	1	UN			85635621	
4	85506061	GLAND NUT SCREW PG9	1	UN			85506061	
5	85499663	PIPE UNION PG9	1	UN			85499663	
6	85631422	EMERGENCY STOP BUTTON	1	UN			85631422	

DECALS TERMINAL BLOCK ASSEMBLY

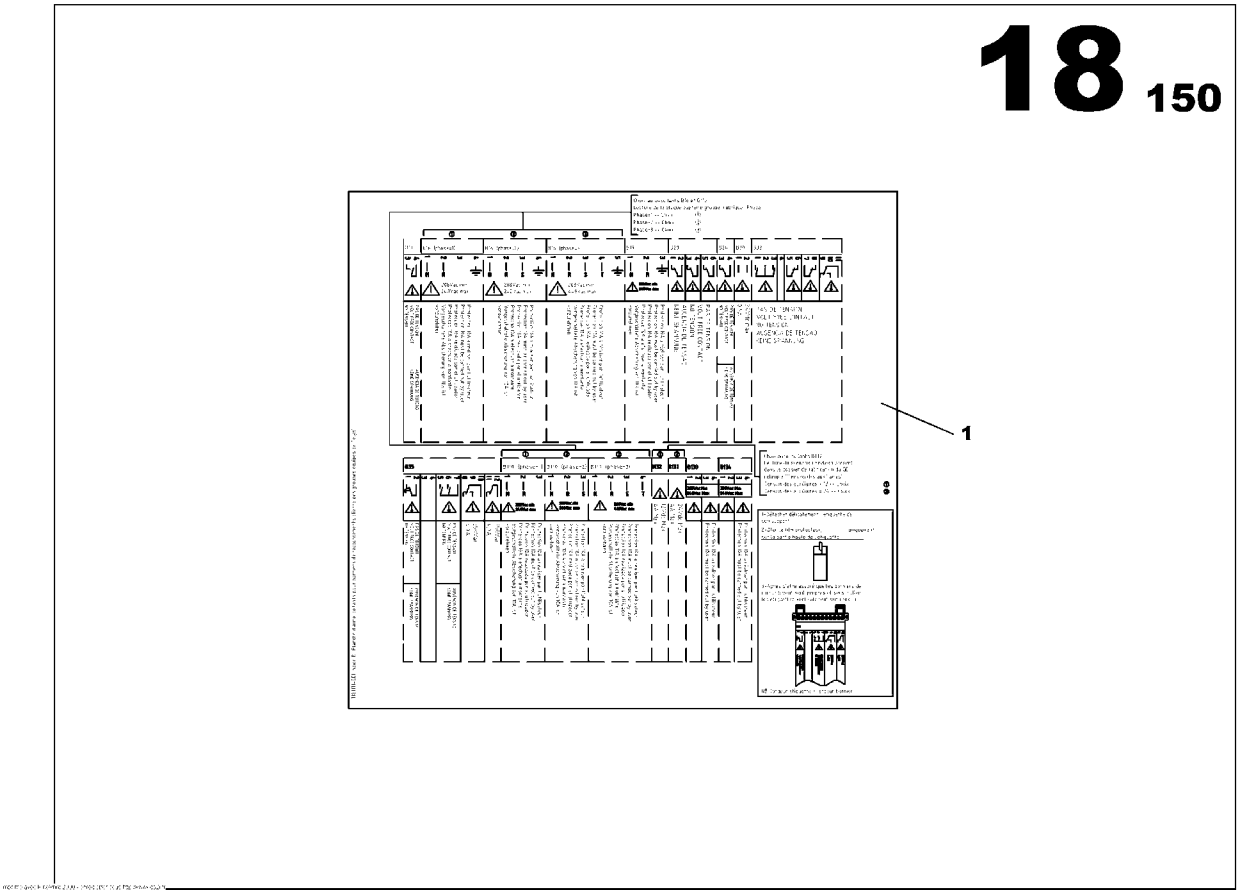

DECALS TERMINAL BLOCK ASSEMBLY
85639599

Part numbers listed are only parts used in this model

Item	Part No.	Description	Qty	Un	From SN	To SN	Order PN	Page
1	85639573	STICKER TERMINAL BLOCK	1	UN	03012825		85639573	

INTELLISYSTM OPTION CB CARD

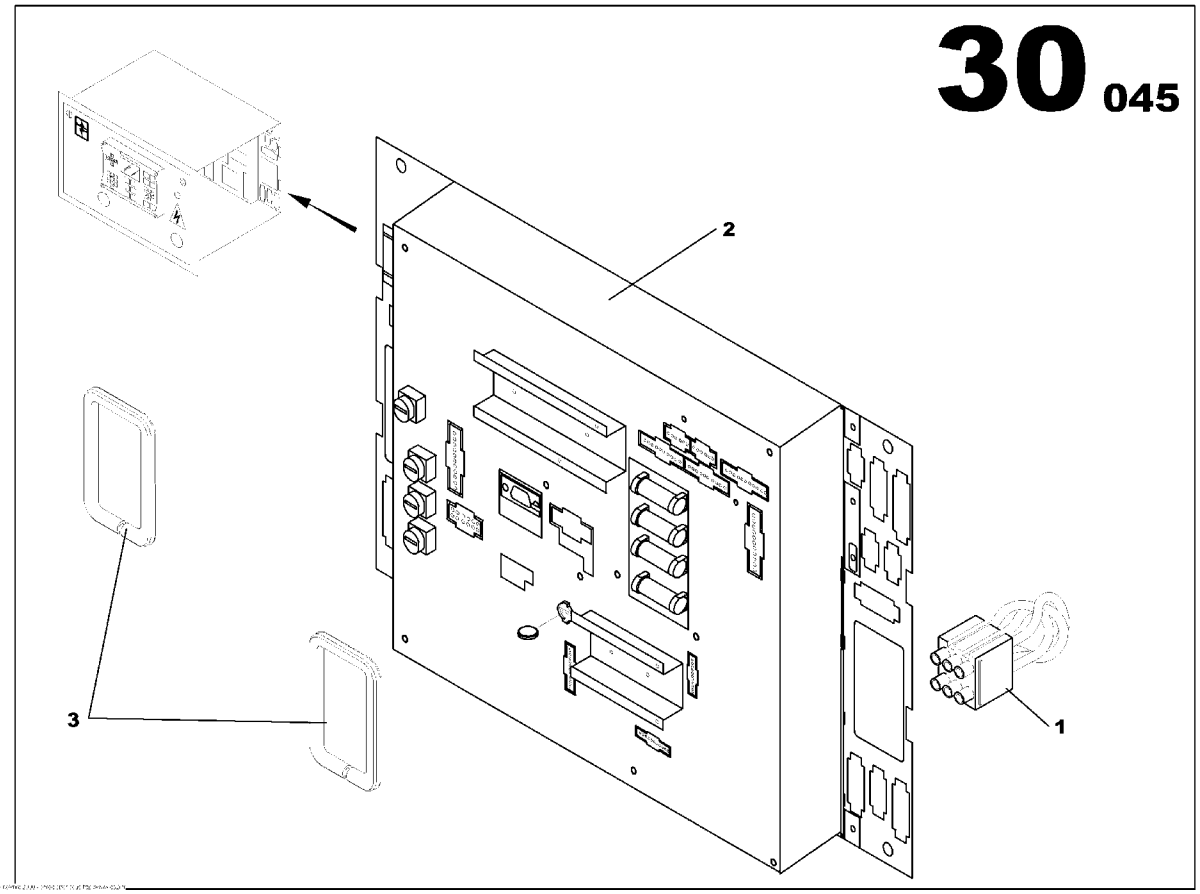

INTELLISYSTM OPTION CB CARD
85411569

Part numbers listed are only parts used in this model

Item	Part No.	Description	Qty	Un	From SN	To SN	Order PN	Page
1	85504033	WIRING LOOM C35S	1	UN			85504033	
2	85636991	INTELLISYSTM CARD CB12 *-1.10G*	1	UN	04000934		85636991	273
3	85630515	LINEAR SEAL	0.2	ML			85630515	

INTELLISYSTM OPTION CB CARD

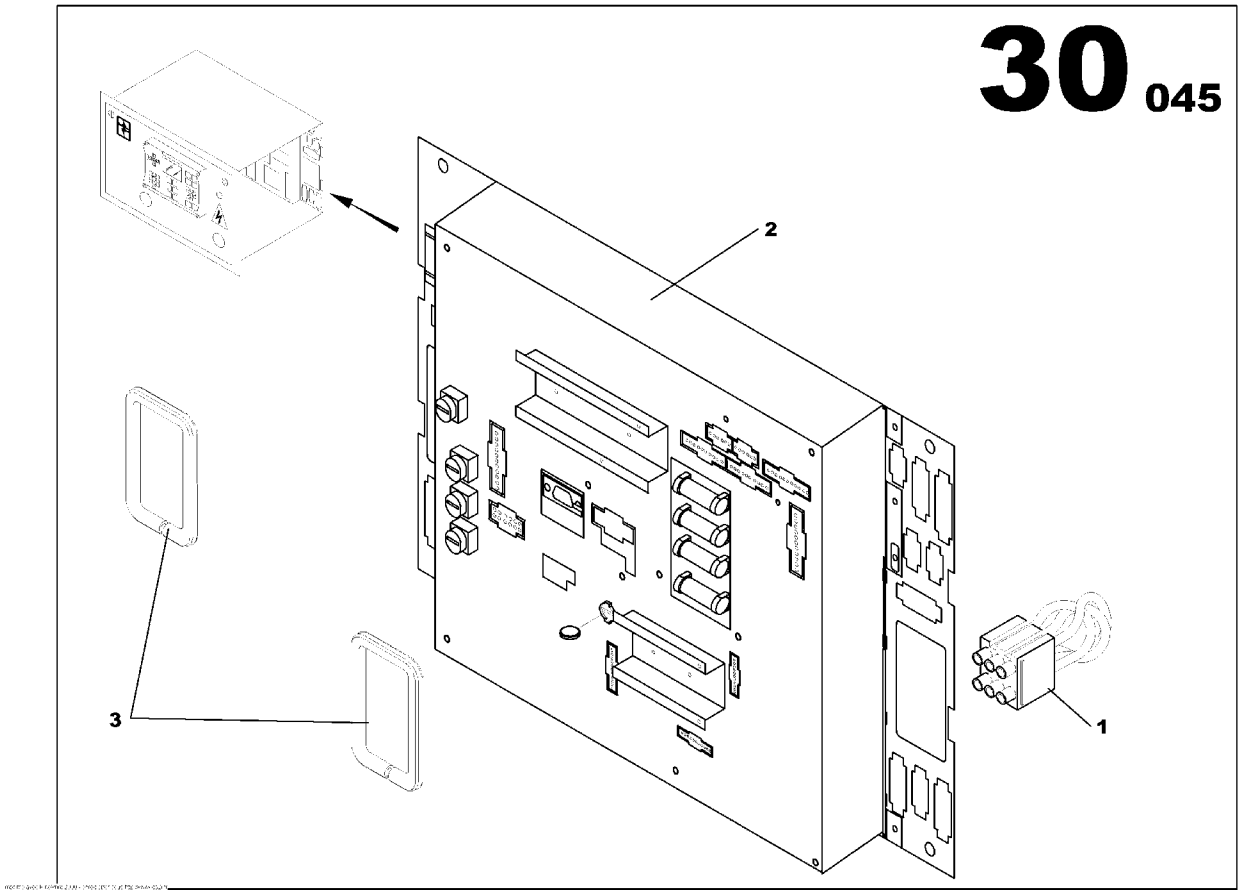

INTELLISYSTM OPTION CB CARD
85411569

Part numbers listed are only parts used in this model

Item	Part No.	Description	Qty	Un	From SN	To SN	Order PN	Page
1	85504033	WIRING LOOM C35S	1	UN			85504033	
2	85636991	INTELLISYSTM CARD CB12 *-1.10G*	1	UN	04000934		85636991	273
3	85630515	LINEAR SEAL	0.2	ML			85630515	

INTELLISYSTM CARD CB12

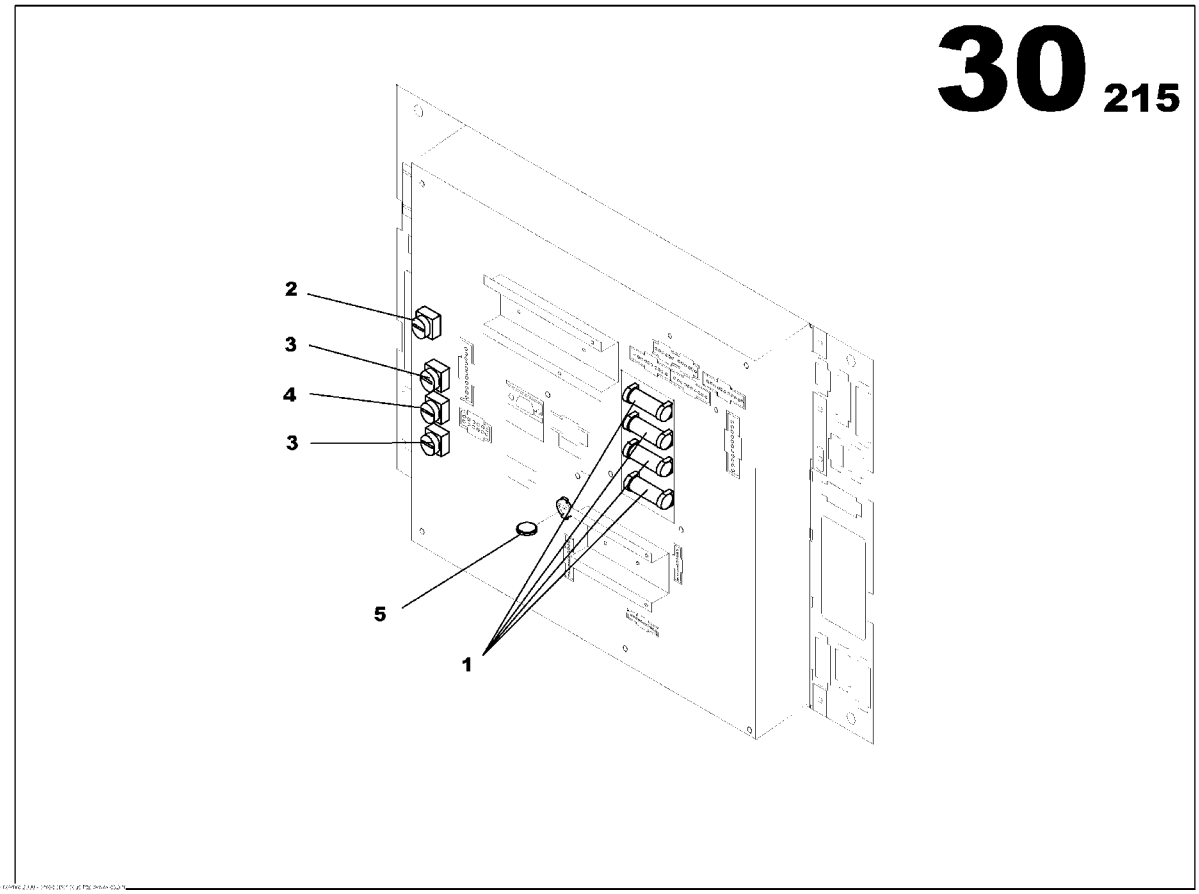

INTELLISYSTM CARD CB12
85636991

Part numbers listed are only parts used in this model

Item	Part No.	Description	Qty	Un	From SN	To SN	Order PN	Page
1	85426112	FUSE CYLINDRICAL 12.5A	4	UN			85426112	
2	85426120	FUSE CYLINDRICAL 10A	1	UN			85426120	
3	85426138	FUSE CYLINDRICAL 1A	2	UN			85426138	
4	85426146	FUSE CYLINDRICAL 2,5A	1	UN			85426146	
5	85505154	CR2032 CELL	1	UN			85505154	

EARTH LEAKAGE RELAY OPTION

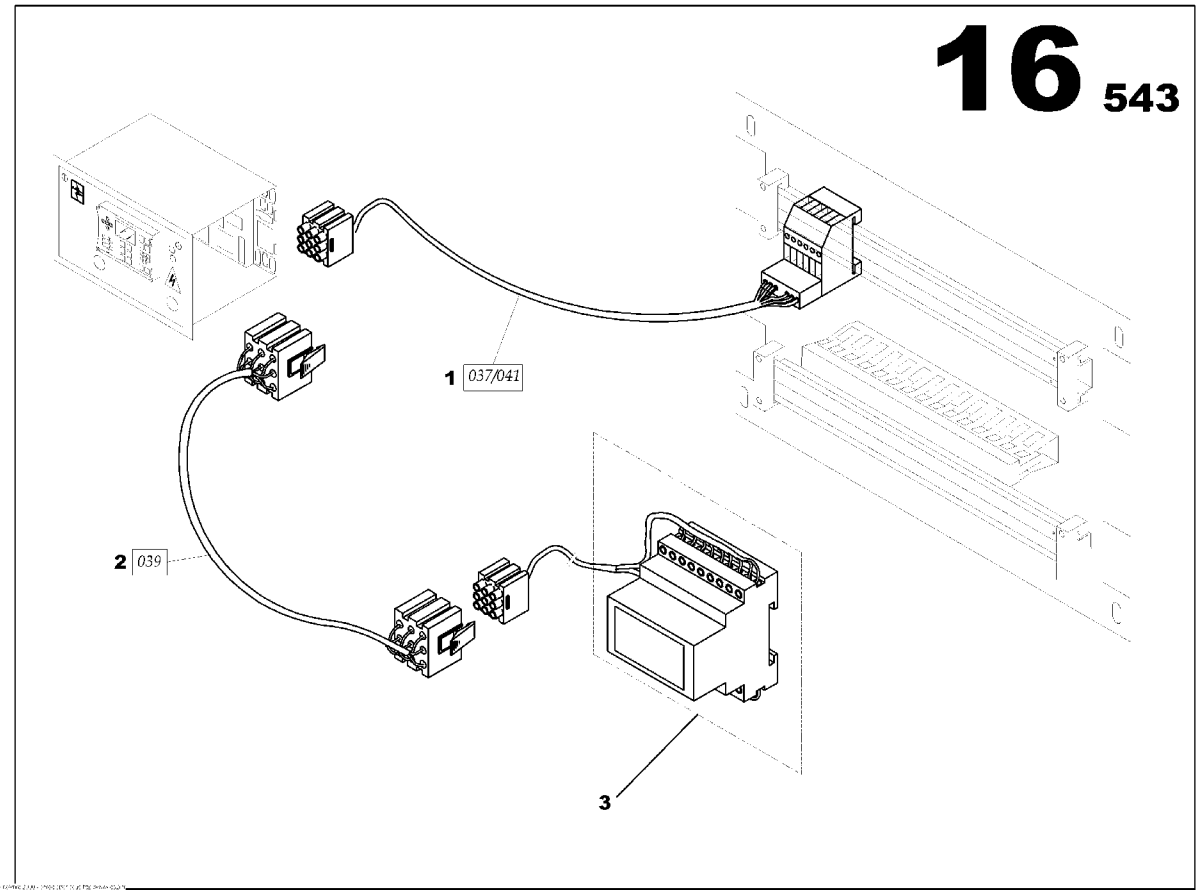

EARTH LEAKAGE RELAY OPTION
17130691

Part numbers listed are only parts used in this model

Item	Part No.	Description	Qty	Un	From SN	To SN	Order PN	Page
1	85636892	INTELLISYSTM WIRING LOOM 037/041	1	UN			85636892	
2	85636942	INTELLISYSTM WIRING LOOM 030	1	UN			85636942	
3	85504272	EARTH LEAKAGE 12V	1	UN			85504272	279

EARTH LEAKAGE RELAY OPTION

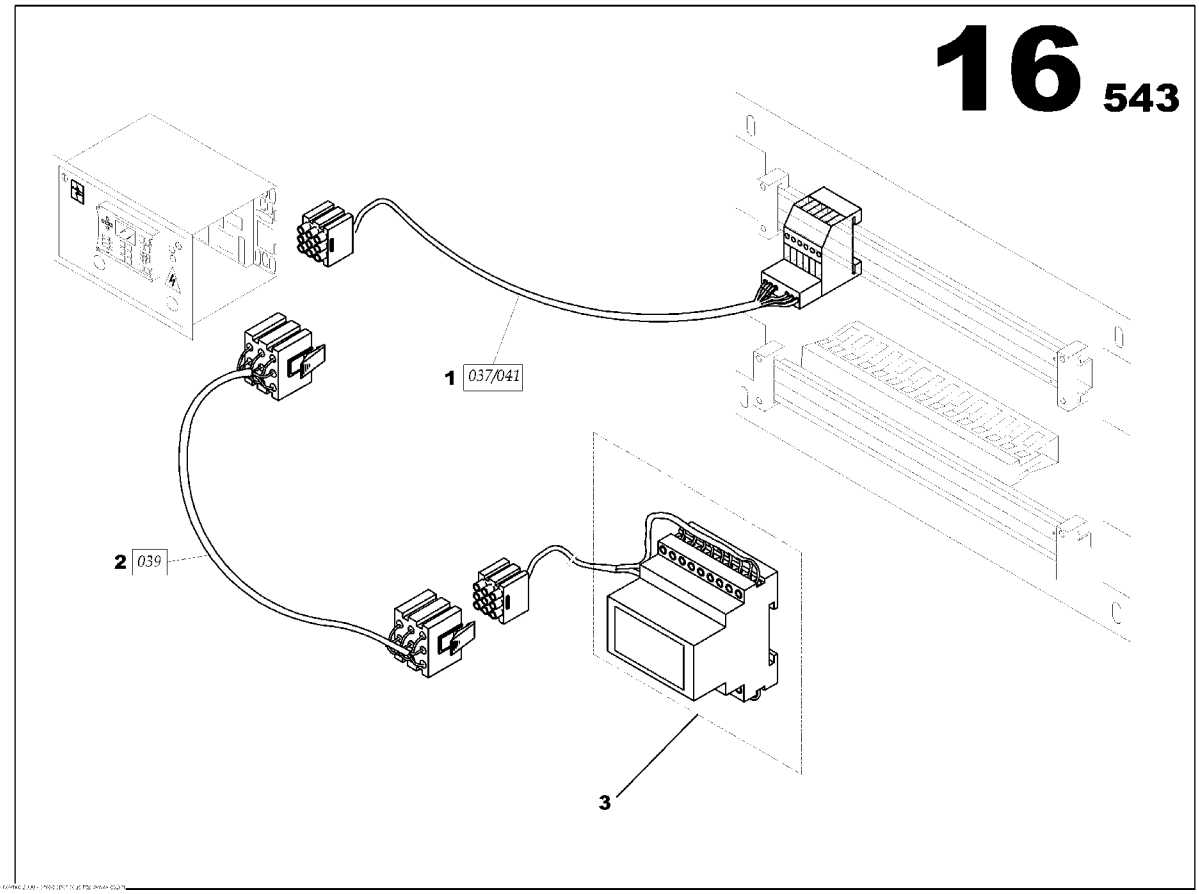

EARTH LEAKAGE RELAY OPTION
17130691

Part numbers listed are only parts used in this model

Item	Part No.	Description	Qty	Un	From SN	To SN	Order PN	Page
1	85636892	INTELLISYSTM WIRING LOOM 037/041	1	UN			85636892	
2	85636942	INTELLISYSTM WIRING LOOM 030	1	UN			85636942	
3	85504272	EARTH LEAKAGE 12V	1	UN			85504272	279

EARTH LEAKAGE 12V

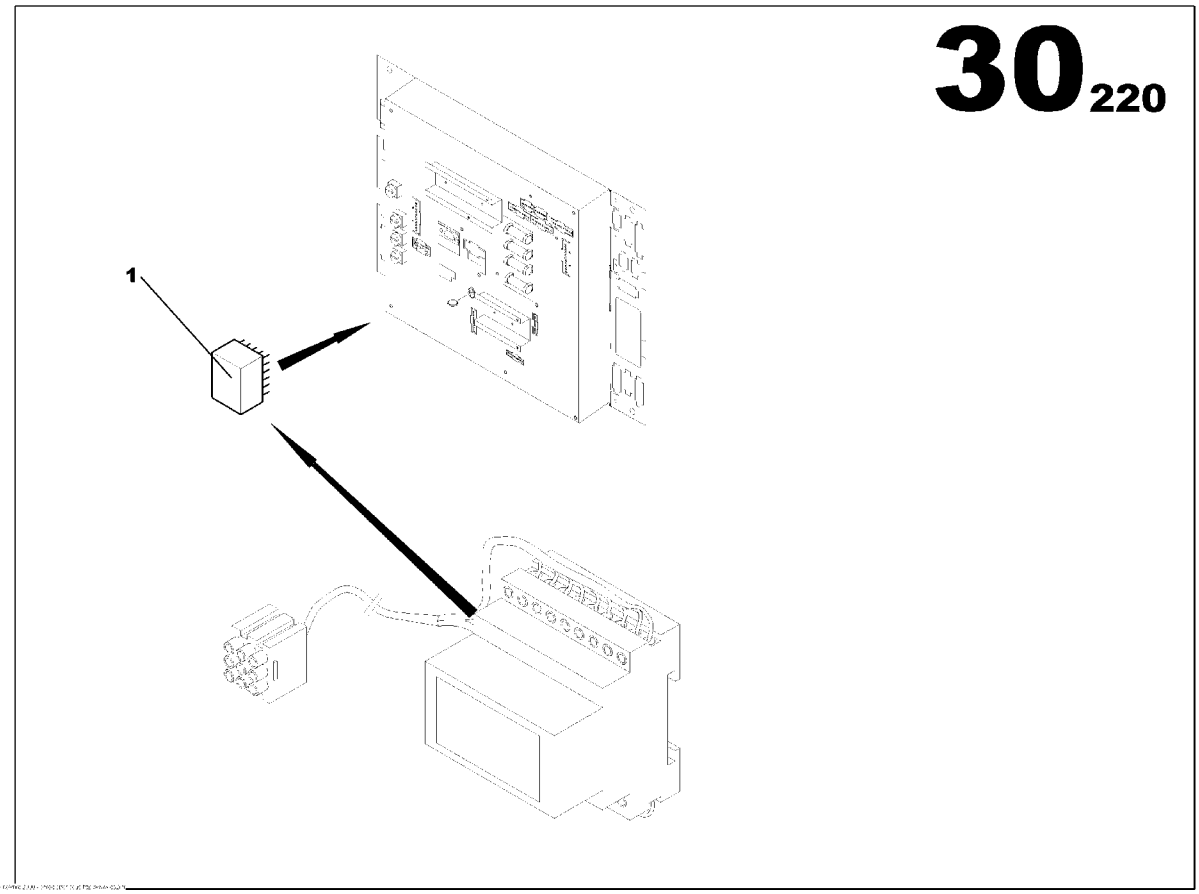

EARTH LEAKAGE 12V
85504272

Part numbers listed are only parts used in this model

Item	Part No.	Description	Qty	Un	From SN	To SN	Order PN	Page
1	85508570	RELAY CI 12V (RT2)	1	UN			85508570	

S2500 DASHBOARD OPTION

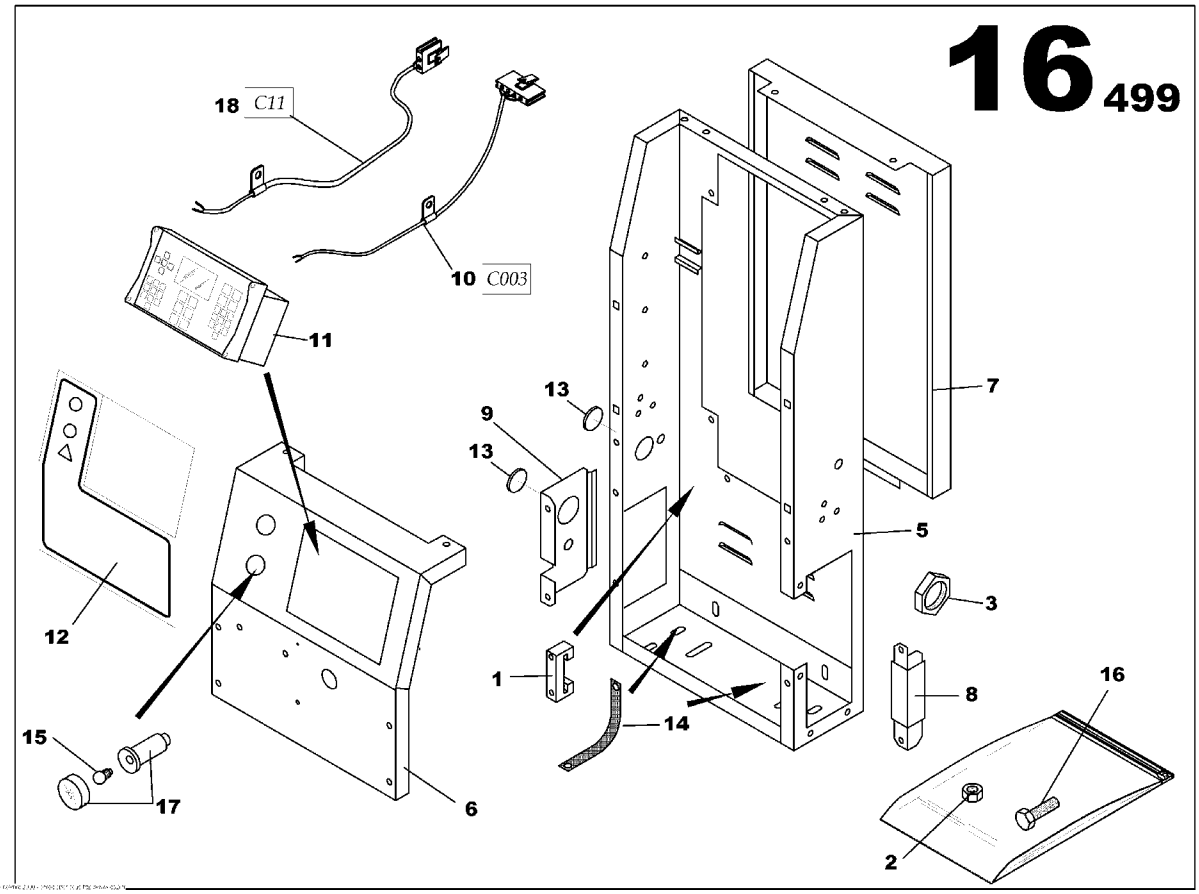

S2500 DASHBOARD OPTION
85636272

Part numbers listed are only parts used in this model

Item	Part No.	Description	Qty	Un	From SN	To SN	Order PN	Page
1	85634715	CONTROL PANEL SHEET METAL ASSEMBLY	1	UN			85634715	285
1	85408854	STOP	3	UN			85408854	
2	85408656	NUT M5	1	UN			85408656	
2	85636298	CONTROL PANEL ASSEMBLY	1	UN			85636298	287
3	85413276	GLAND NUT SCREW PG11	1	UN			85413276	
3	85636595	PLASTIC PLATE S2500 ASSEMBLY	1	UN			85636595	289
5	85636835	CONTROL PANEL S2500 HOUSING	1	UN			85636835	
6	85636843	CONTROL PANEL S2500 HOUSING	1	UN			85636843	
7	85636850	REAR CLOSURE CONTROL PANEL	1	UN			85636850	
8	85636868	SUPPORT PANEL	1	UN			85636868	
9	85635027	CABLE OUTLET PLATE	1	UN			85635027	
10	85504017	INTELLISYSTM WIRING LOOM 003	1	UN			85504017	
11	85623668	INTELLISYSTM DISPLAY *-IR PLATE SOFT 1.2*	1	UN			85627495	
12	85636587	PLASTIC PLATE L235xh245	1	UN			85636587	
13	85408391	RUBBER GROMMET D47	2	UN			85408391	
14	85505543	GROUND WIRES 16mm2	2	UN			85505543	
15	85402519	LAMP 12V BA9S TYPE	1	UN			85402519	
16	85636389	SCREW H M6x16	10	UN			85636389	
17	85503522	PANEL LIGHT CYLINDRIC D22	1	UN			85503522	
18	85504025	WIRING LOOM C11 L460	1	UN			85504025	

S2500 DASHBOARD OPTION

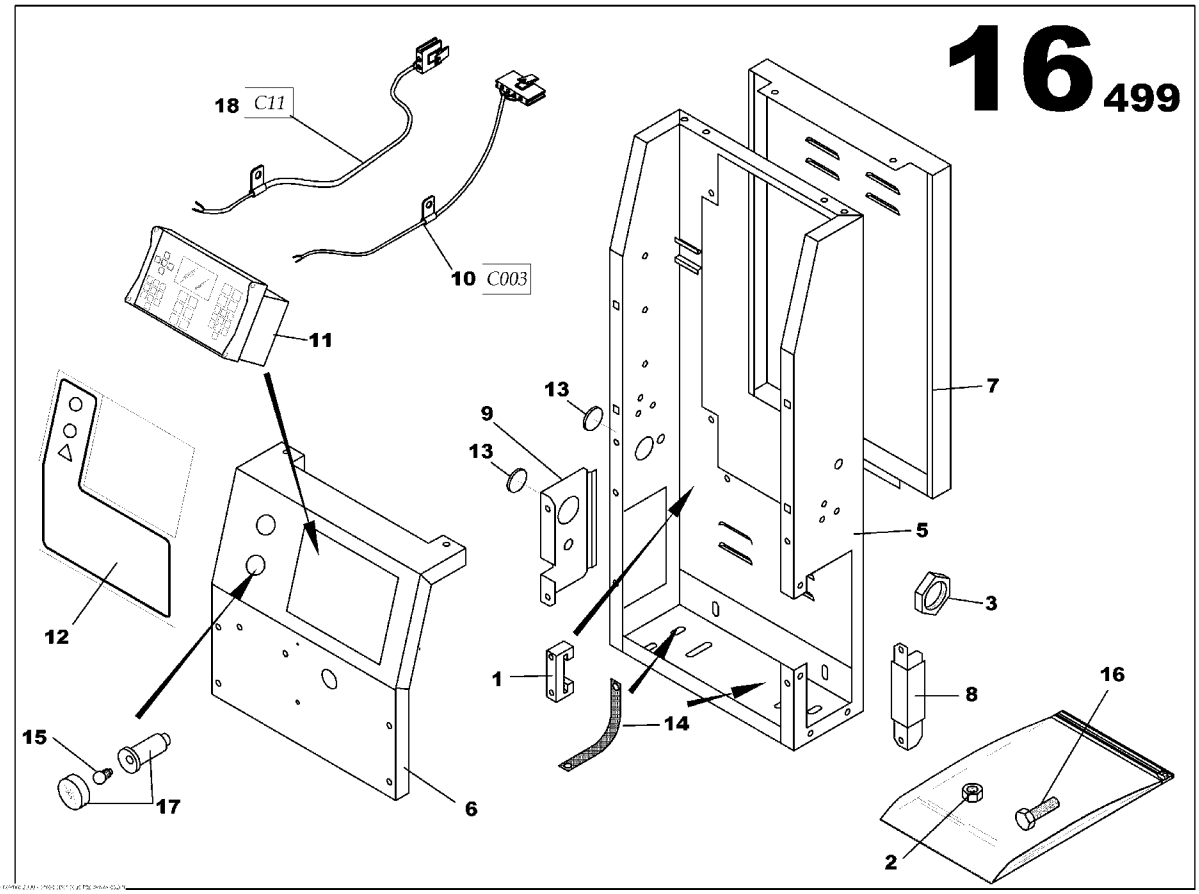

S2500 DASHBOARD OPTION
85636272

Part numbers listed are only parts used in this model

Item	Part No.	Description	Qty	Un	From SN	To SN	Order PN	Page
1	85634715	CONTROL PANEL SHEET METAL ASSEMBLY	1	UN			85634715	285
1	85408854	STOP	3	UN			85408854	
2	85408656	NUT M5	1	UN			85408656	
2	85636298	CONTROL PANEL ASSEMBLY	1	UN			85636298	287
3	85413276	GLAND NUT SCREW PG11	1	UN			85413276	
3	85636595	PLASTIC PLATE S2500 ASSEMBLY	1	UN			85636595	289
5	85636835	CONTROL PANEL S2500 HOUSING	1	UN			85636835	
6	85636843	CONTROL PANEL S2500 HOUSING	1	UN			85636843	
7	85636850	REAR CLOSURE CONTROL PANEL	1	UN			85636850	
8	85636868	SUPPORT PANEL	1	UN			85636868	
9	85635027	CABLE OUTLET PLATE	1	UN			85635027	
10	85504017	INTELLISYSTM WIRING LOOM 003	1	UN			85504017	
11	85623668	INTELLISYSTM DISPLAY *-IR PLATE SOFT 1.2*	1	UN			85627495	
12	85636587	PLASTIC PLATE L235xh245	1	UN			85636587	
13	85408391	RUBBER GROMMET D47	2	UN			85408391	
14	85505543	GROUND WIRES 16mm2	2	UN			85505543	
15	85402519	LAMP 12V BA9S TYPE	1	UN			85402519	
16	85636389	SCREW H M6x16	10	UN			85636389	
17	85503522	PANEL LIGHT CYLINDRIC D22	1	UN			85503522	
18	85504025	WIRING LOOM C11 L460	1	UN			85504025	

CONTROL PANEL SHEET METAL ASSEMBLY

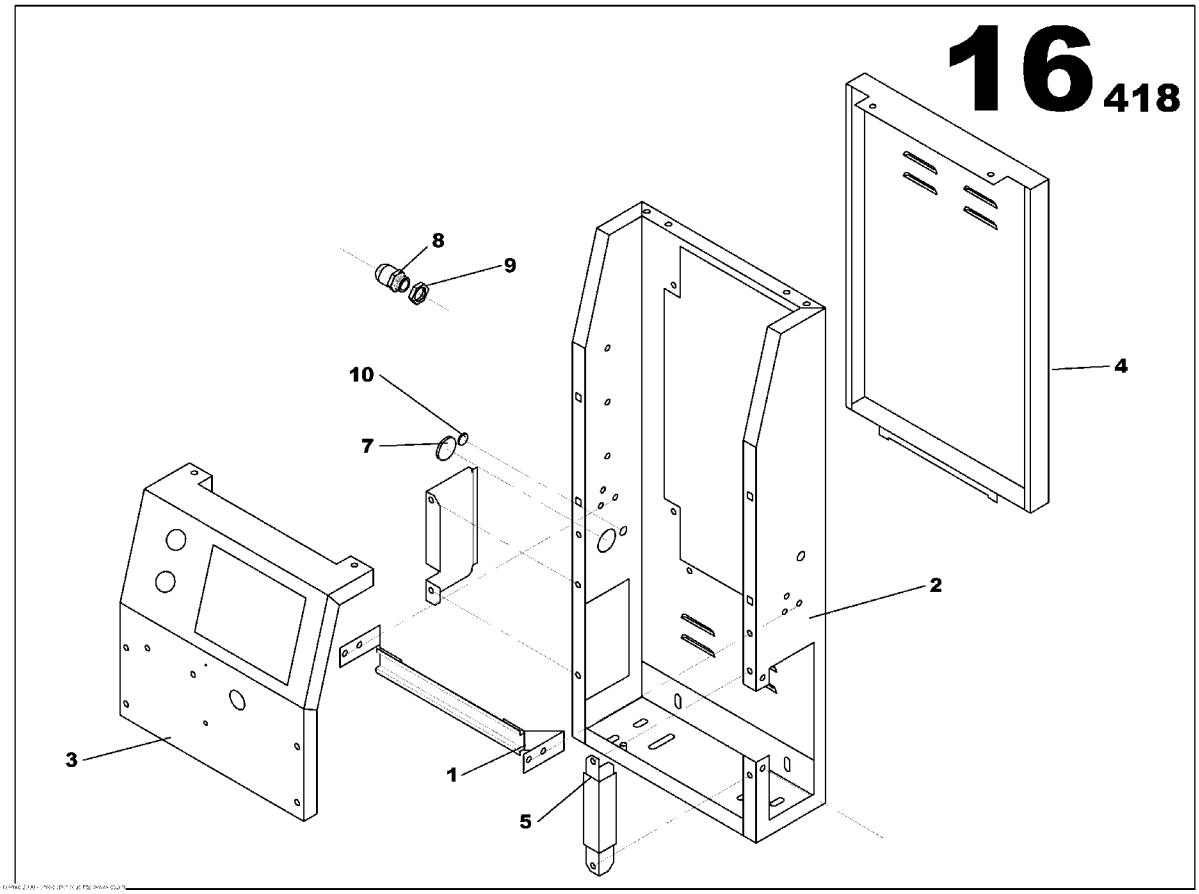

CONTROL PANEL SHEET METAL ASSEMBLY
85634715

Part numbers listed are only parts used in this model

Item	Part No.	Description	Qty	Un	From SN	To SN	Order PN	Page
1	85634632	ELECTRIC DIN RAIL	1	UN			85634632	
2	85634665	CONTROL PANEL S2500 HOUSING	1	UN			85634665	
3	85634673	CONTROL PANEL BRACKET	1	UN			85634673	
4	85634681	REAR CLOSURE PANEL S2500 CONTROL PANEL	1	UN			85634681	
5	85634699	SUPPORT PANEL S2500 CONTROL PANEL	1	UN			85634699	
6	85635027	CABLE OUTLET PLATE	1	UN			85635027	
7	85408391	RUBBER GROMMET D47	2	UN			85408391	
8	85635894	GLAND NUT PG13	1	UN			85635894	
9	85635902	PG13 NUT	1	UN			85635902	
10	85636694	RUBBER GROMMET D15	1	UN			85636694	

CONTROL PANEL ASSEMBLY

CONTROL PANEL ASSEMBLY
85636298

Part numbers listed are only parts used in this model

Item	Part No.	Description	Qty	Un	From SN	To SN	Order PN	Page

PLASTIC PLATE S2500 ASSEMBLY

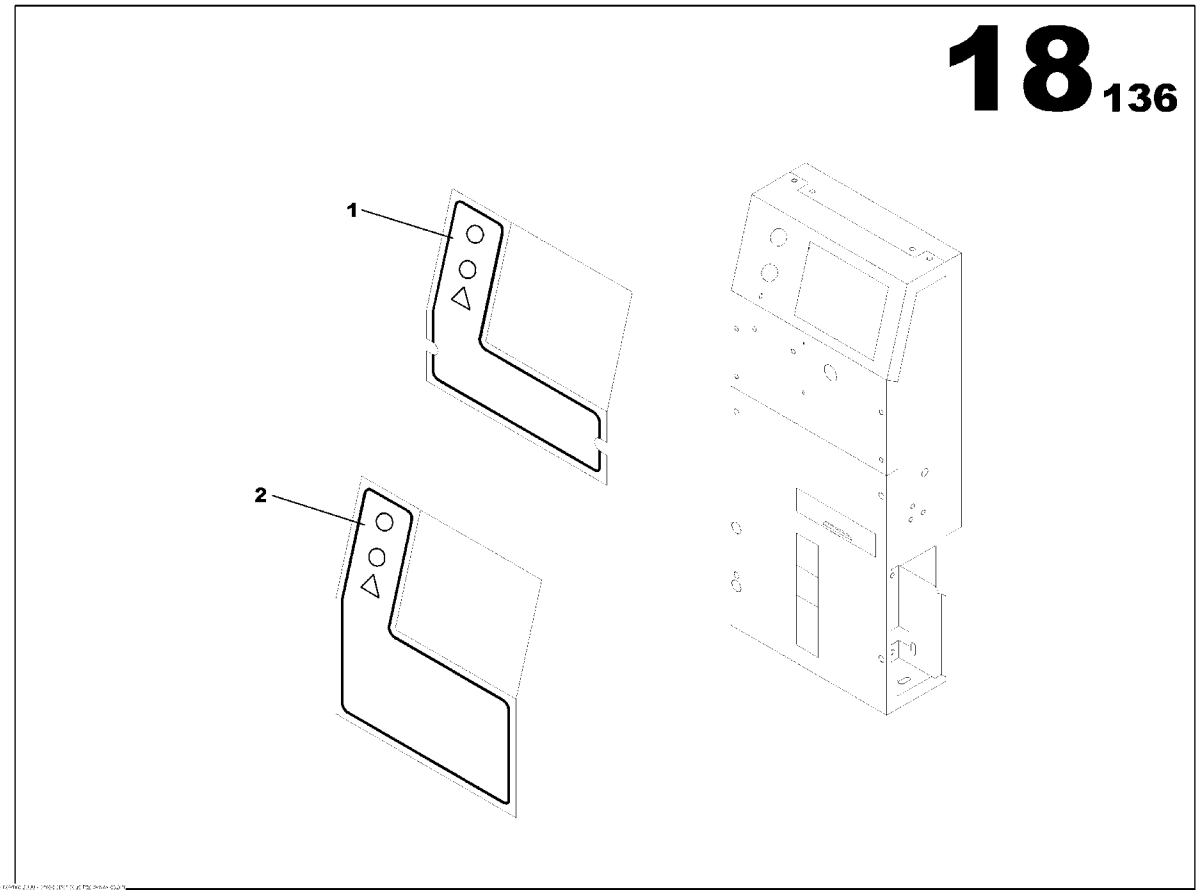

PLASTIC PLATE S2500 ASSEMBLY
85636595

Part numbers listed are only parts used in this model

Item	Part No.	Description	Qty	Un	From SN	To SN	Order PN	Page
1	85636587	PLASTIC PLATE L235xh245	1	UN			85636587	
2	85636611	PLASTIC PLATE L235xh325	1	UN			85636611	

TELYS 035 WIRING LOOM ASSEMBLY JD 6081

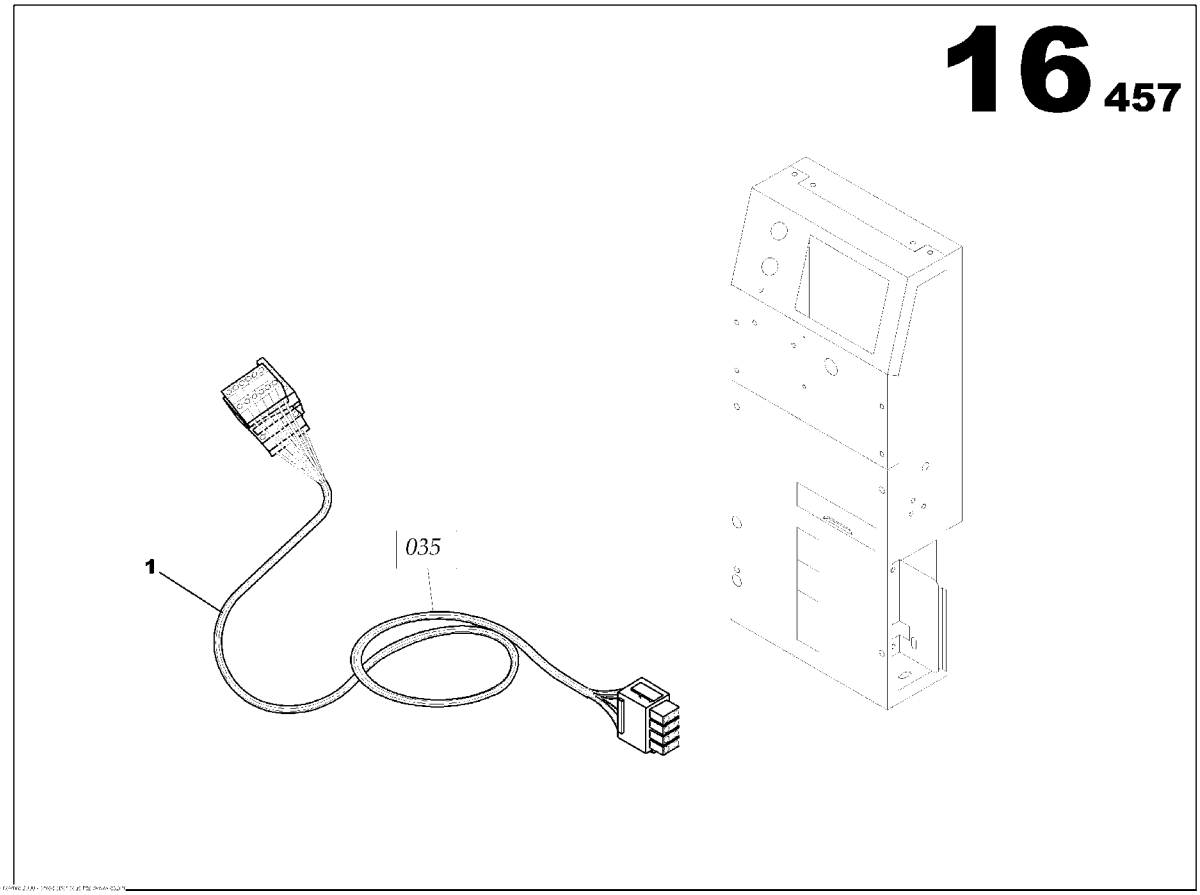

TELYS 035 WIRING LOOM ASSEMBLY JD 6081
85635415

Part numbers listed are only parts used in this model

Item	Part No.	Description	Qty	Un	From SN	To SN	Order PN	Page
1	85635308	INTELLISYSTM WIRING LOOM 035	1	UN	02010280		85635308	

POWER TERMINAL CONNECTIONS 50A ASSEMBLY

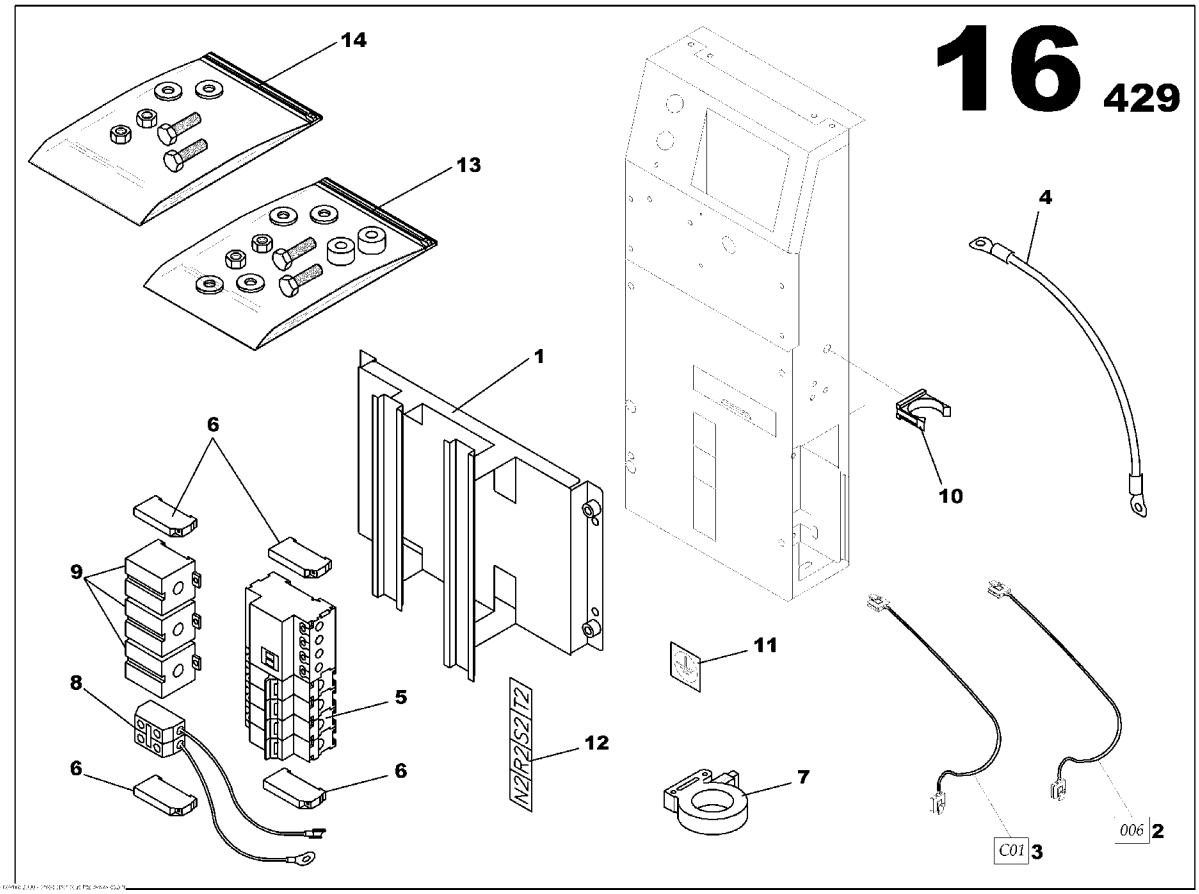

POWER TERMINAL CONNECTIONS 50A ASSEMBLY
85634855

Part numbers listed are only parts used in this model

Item	Part No.	Description	Qty	Un	From SN	To SN	Order PN	Page
1	85635019	CONTROL PANEL S2500 CIRCUIT BREAKER BRACKET	1	UN			85635019	
2	85635373	INTELLISYSTM WIRING LOOM 006	1	UN			85635373	
3	85635456	INTELLISYSTM WIRING LOOM 001	1	UN			85635456	
4	85635589	NEUTRAL/EARTH SYSTEM CABLE 16mm2 L150	1	UN			85635589	
5	85413193	MOULDED CASE CIRCUIT BREAKER 4x50A	1	UN			85413193	
6	85408706	STOP	4	UN			85408706	
7	85635886	TORE	1	UN			85635886	
8	85635944	TERMINAL JUNCTION	1	UN			85635944	
9	85632792	CURRENT TRANSFORMER 60/5	3	UN			85632792	
10	85636033	SHAFT BRACKET	1	UN			85636033	
11	85409084	STICKER EARTH SYMBOL	1	UN			85409084	
12	85409092	STICKER POWER LINK	1	UN			85409092	
13	85636439	SCREWS ASSEMBLY	1	UN			85636439	295
14	85636454	SCREWS ASSEMBLY	1	UN			85636454	297

SCREWS ASSEMBLY

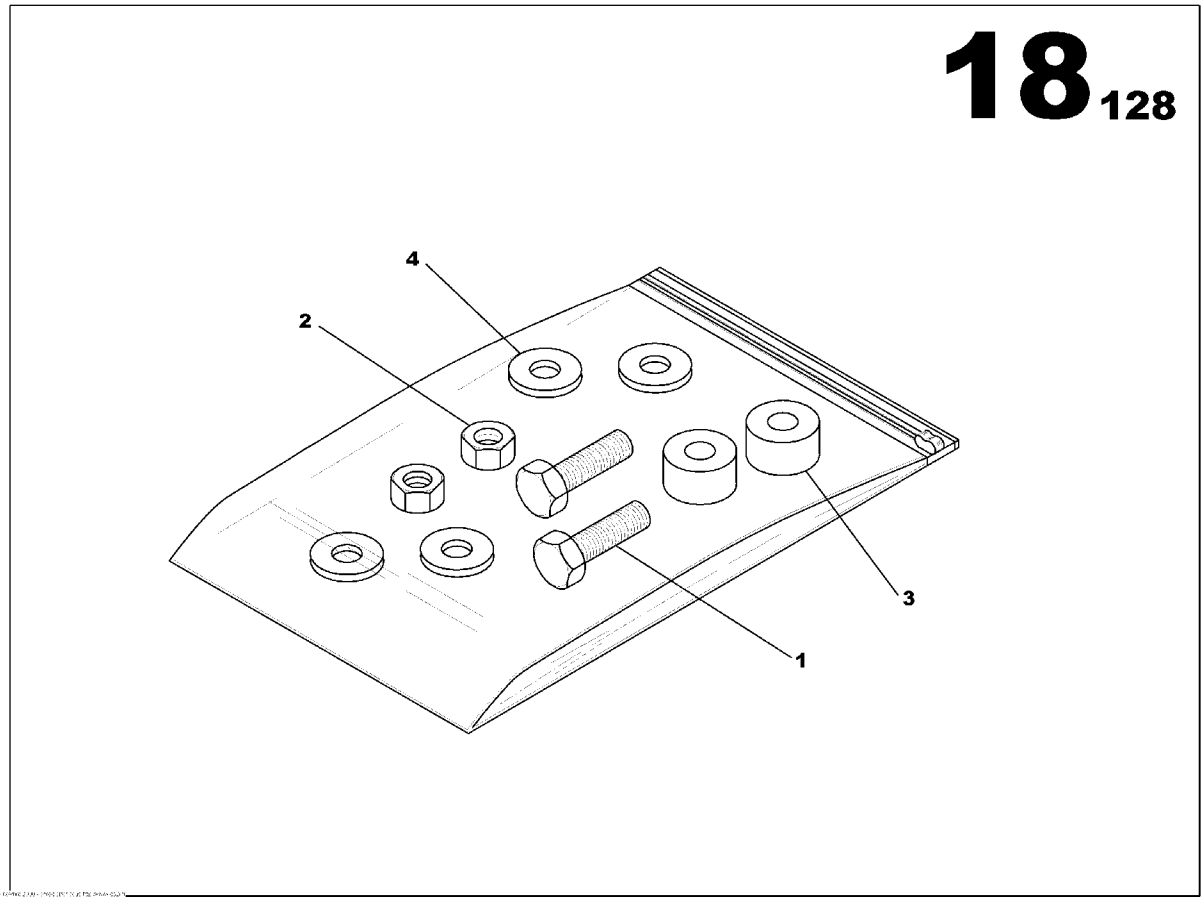

SCREWS ASSEMBLY
85636439

Part numbers listed are only parts used in this model

Item	Part No.	Description	Qty	Un	From SN	To SN	Order PN	Page
1	85636330	SCREW H M6x12	2	UN			85636330	
2	85507911	NUT M6	2	UN			85507911	
3	85636652	SPACER	2	UN			85636652	
4	85636744	WASHER 6x18	4	UN			85636744	

SCREWS ASSEMBLY

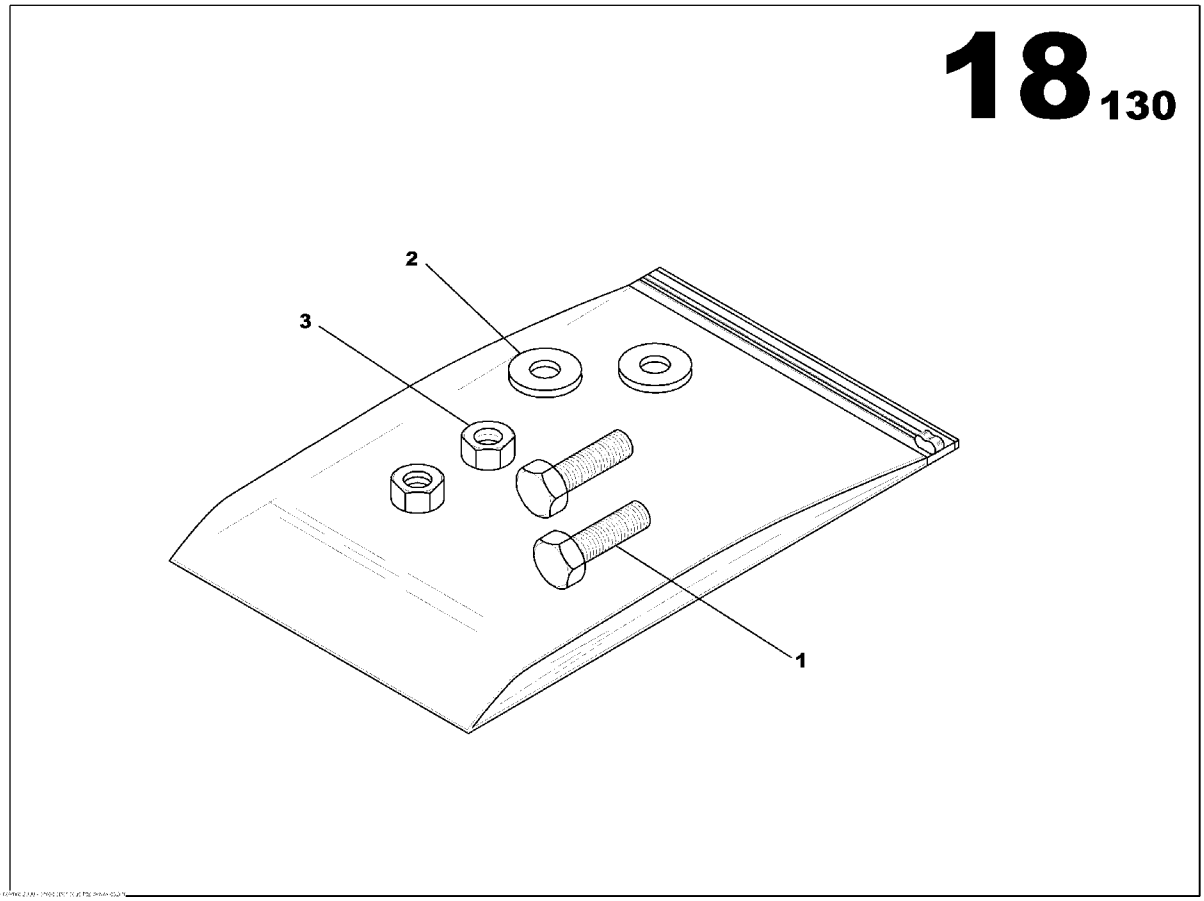

SCREWS ASSEMBLY
85636454

Part numbers listed are only parts used in this model

Item	Part No.	Description	Qty	Un	From SN	To SN	Order PN	Page
1	85636363	SCREW HS M4x16	2	UN			85636363	
2	85636728	WASHER 4x10	2	UN			85636728	
3	85429553	NUT M4	2	UN			85429553	

RELEASE COIL ASSEMBLY

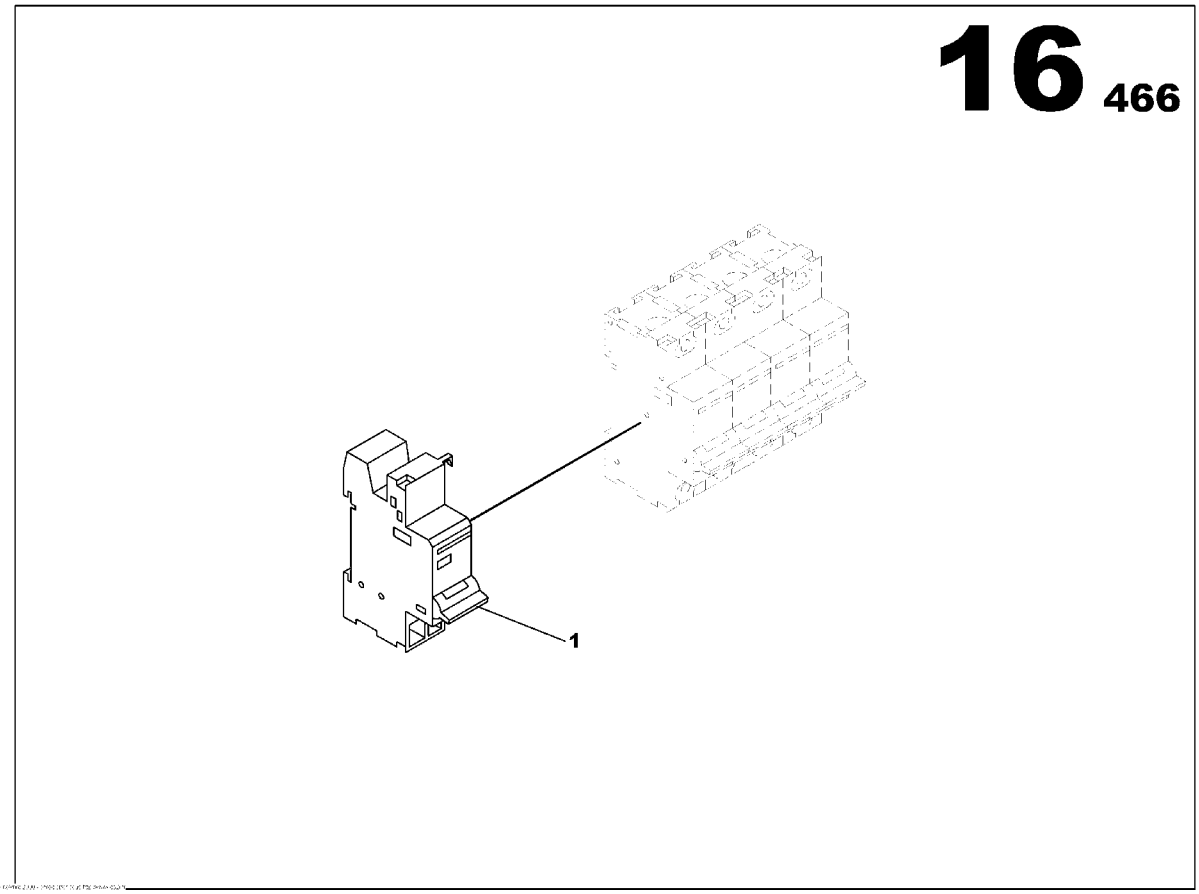

RELEASE COIL ASSEMBLY

85635738

Part numbers listed are only parts used in this model

Item	Part No.	Description	Qty	Un	From SN	To SN	Order PN	Page
1	85408516	CIRCUIT BREAKER SHUNT RELEASE COIL 220/415VAC	1	UN			85408516	

3 WAY FUEL VALVES OPTION

Non illustré
Not illustrated

3 WAY FUEL VALVES OPTION

Part numbers listed are only parts used in this model

Item	Part No.	Description	Qty	Un	From SN	To SN	Order PN	Page
1	85633303	3 WAY FUEL VALVE ASSEMBLY	1	UN			85633303	303

3 WAY FUEL VALVE ASSEMBLY

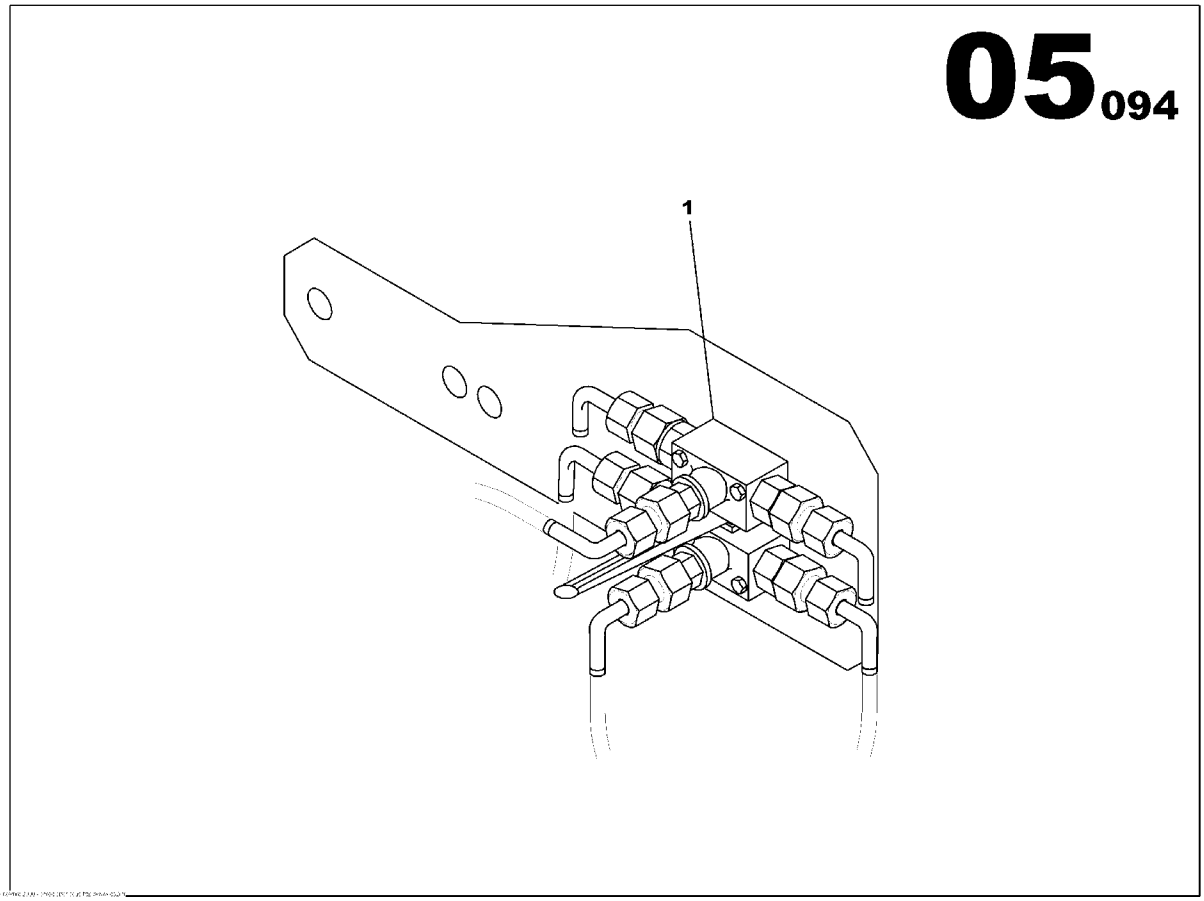

3 WAY FUEL VALVE ASSEMBLY
85633303

Part numbers listed are only parts used in this model

Item	Part No.	Description	Qty	Un	From SN	To SN	Order PN	Page
1	85632867	3 WAY FUEL VALVE ASSEMBLY	1	UN			85632867	305

3 WAY FUEL VALVE ASSEMBLY

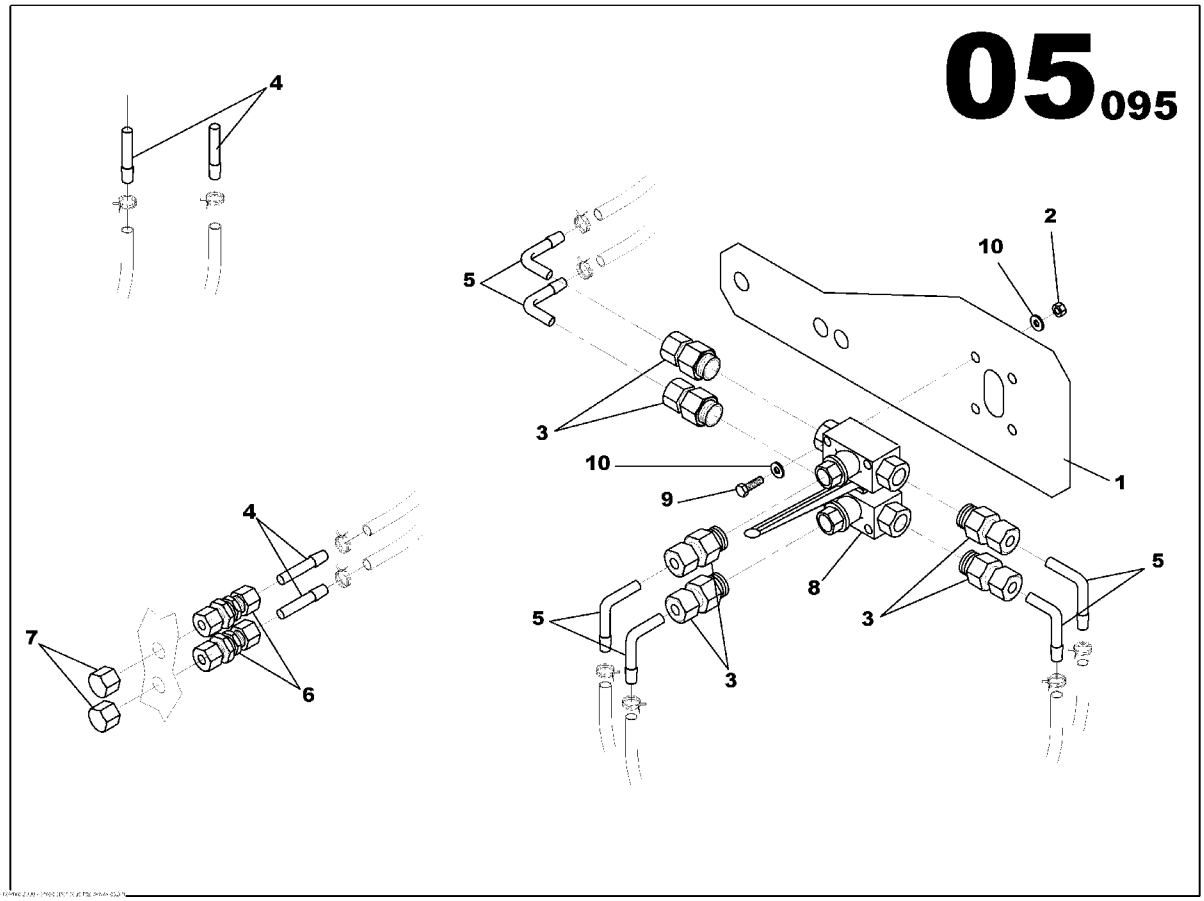

3 WAY FUEL VALVE ASSEMBLY
85632867

Part numbers listed are only parts used in this model

Item	Part No.	Description	Qty	Un	From SN	To SN	Order PN	Page
1	85633295	3 WAY FUEL VALVE BRACKET	1	UN			85633295	
2	85429959	NUT M5	4	UN			85429959	
3	85409266	PIPE UNION REDUCER MAL/FEM 3/8G D8	6	UN			85409266	
4	85426377	PIPE UNION REDUCER MAL/MAL D8 D8	4	UN			85426377	
5	85409290	PIPE UNION ELBOW MAL/MAL D8	6	UN			85409290	
6	85409332	PIPE UNION FEM/FEM D8	2	UN			85409332	
7	85625010	PLUG D08	2	UN			85625010	
8	85631802	3 WAY VALVE	1	UN			85631802	
9	85632206	SCREW H M5x45	4	UN			85632206	
10	85429967	WASHER 5x12	8	UN			85429967	

REINFORCED INSULATION OPTION

Non illustré
Not illustrated

REINFORCED INSULATION OPTION

Part numbers listed are only parts used in this model

Item	Part No.	Description	Qty	Un	From SN	To SN	Order PN	Page
1	85429124	ALTERNATOR LS 422L	1	UN			85429124	

DUAL FREQUENCY OPTION

Non illustré
Not illustrated

DUAL FREQUENCY OPTION

Part numbers listed are only parts used in this model

Item	Part No.	Description	Qty	Un	From SN	To SN	Order PN	Page
1	85401040	ELECTRONIC ACTUATOR	1	UN			85401040	311
2	17130212	ELECTRONIC REGULATION ASSEMBLY	1	UN			17130212	313
3	85411411	WIRING LOOM C105	1	UN			85411411	
4	85503506	WIRING LOOM C125	1	UN			85503506	
5	17130709	SPEED POTENTIOMETER OPTION	1	UN			17130709	
6	17130717	DUAL FREQUENCY OPTION	1	UN			17130717	

ELECTRONIC ACTUATOR

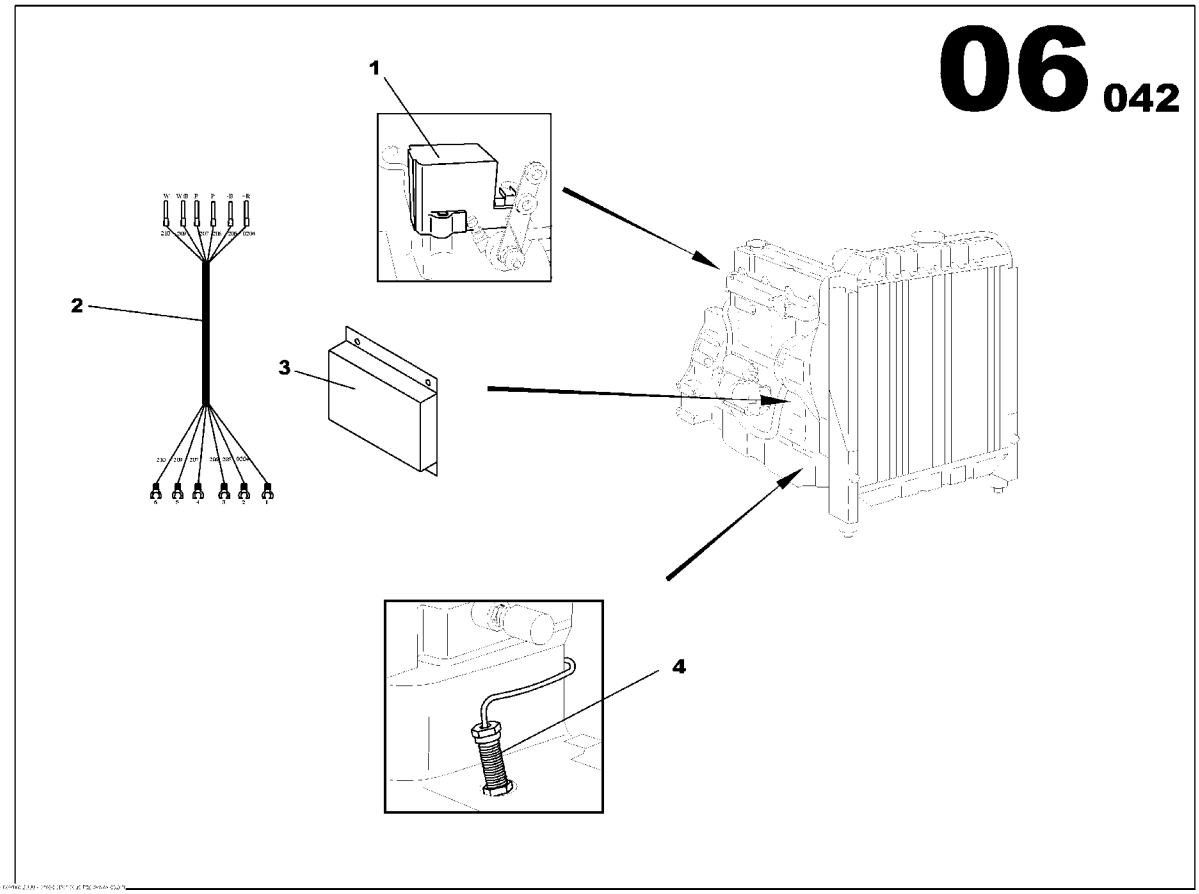

ELECTRONIC ACTUATOR
85401040

Part numbers listed are only parts used in this model

Item	Part No.	Description	Qty	Un	From SN	To SN	Order PN	Page
1	85403616	ELECTRONIC ACTUATOR	1	UN			85403616	
3	17130204	SPEED ELECTRONIC GOVERNOR 12VCC	1	UN	03012817		17130204	
4	85403632	MAGNETIC SPEED SENSOR L75 3/4UNF	1	UN			85403632	

ELECTRONIC REGULATION ASSEMBLY

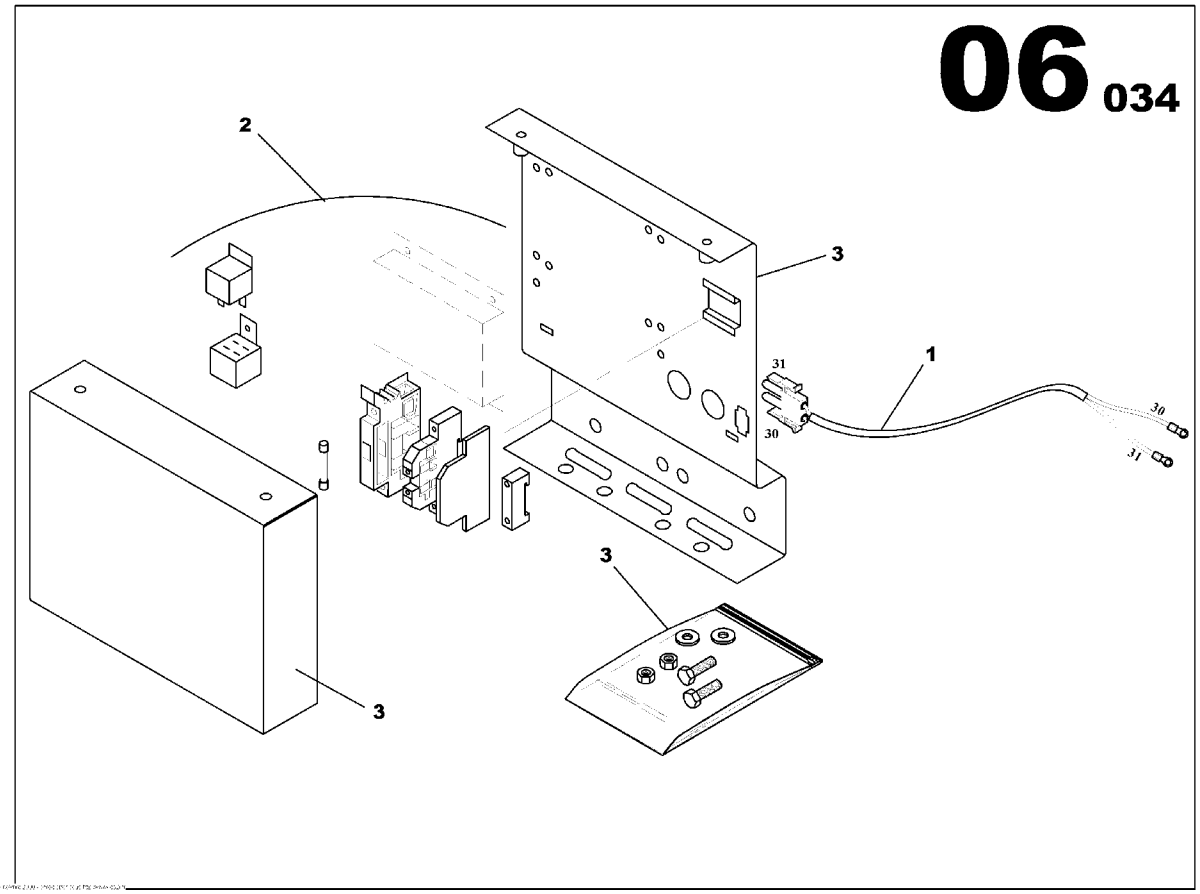

ELECTRONIC REGULATION ASSEMBLY
17130212

Part numbers listed are only parts used in this model

Item	Part No.	Description	Qty	Un	From SN	To SN	Order PN	Page
1	17130469	ELECTRONIC REGULATION ASSEMBLY	1	UN			17130469	321
2	85637445	ELECTRONIC REGULATION ASSEMBLY	1	UN			85637445	319
3	85637437	ELECTRONIC REGULATION ASSEMBLY	1	UN			85637437	315

ELECTRONIC REGULATION ASSEMBLY

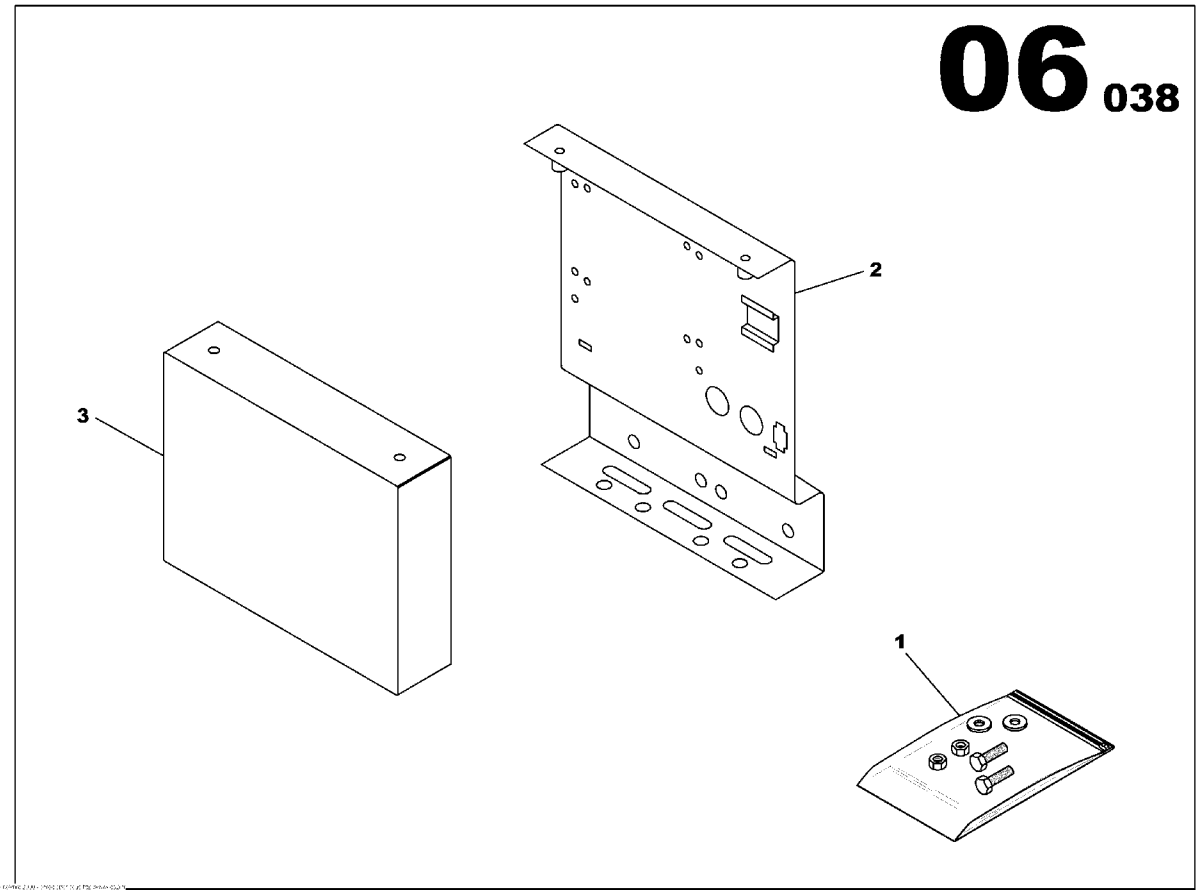

ELECTRONIC REGULATION ASSEMBLY
85637437

Part numbers listed are only parts used in this model

Item	Part No.	Description	Qty	Un	From SN	To SN	Order PN	Page
1	85639425	SCREWS ASSEMBLY	1	UN			85639425	317
2	85638377	REGULATOR BRACKET	1	UN			85638377	
3	85638385	REGULATOR HOUSING COVER	1	UN			85638385	

SCREWS ASSEMBLY

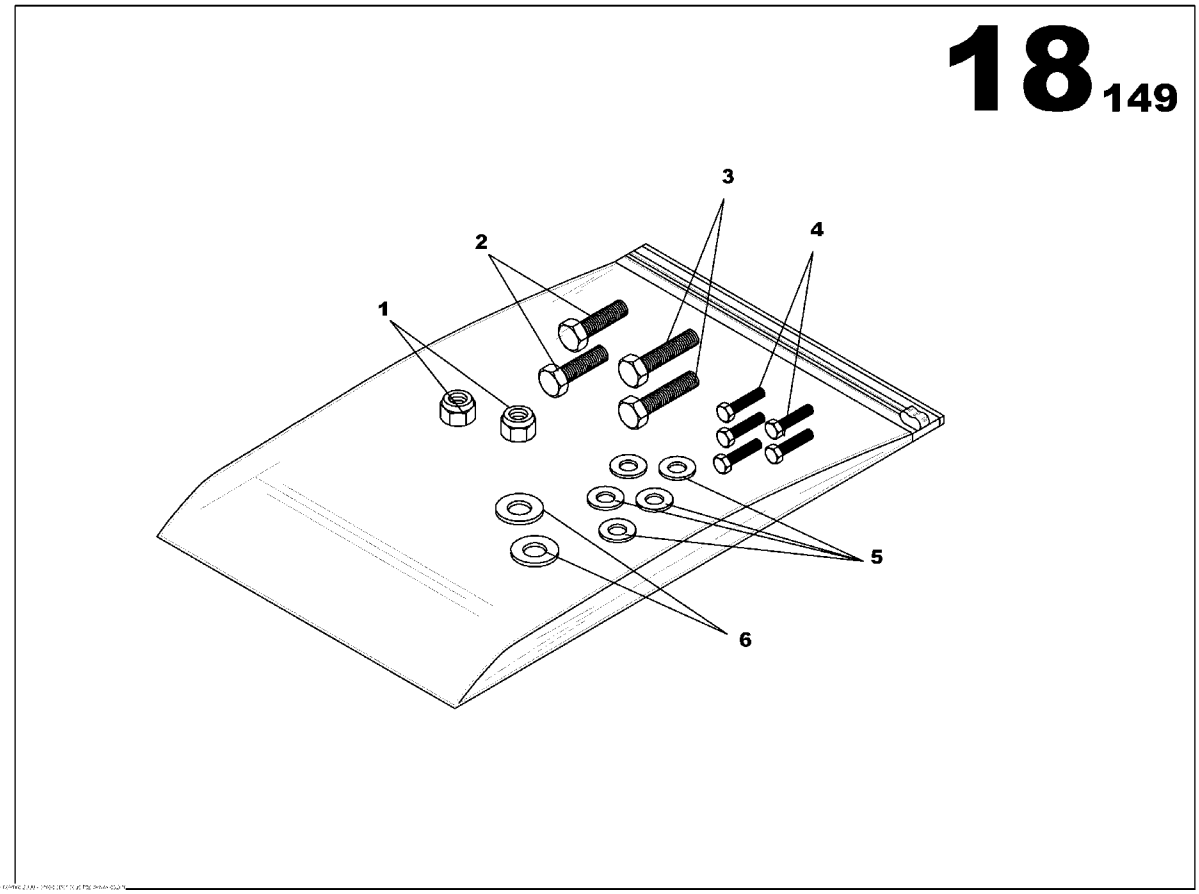

SCREWS ASSEMBLY
85639425

Part numbers listed are only parts used in this model

Item	Part No.	Description	Qty	Un	From SN	To SN	Order PN	Page
1	85430585	NUT M10	2	UN			85430585	
2	85636389	SCREW H M6x16	2	UN			85636389	
3	85631547	SCREW H M10x25	2	UN			85631547	
4	17131160	SCREW H M5x16	5	UN			17131160	
5	85429967	WASHER 5x12	5	UN			85429967	
6	85429728	WASHER D10x22	2	UN			85429728	

ELECTRONIC REGULATION ASSEMBLY

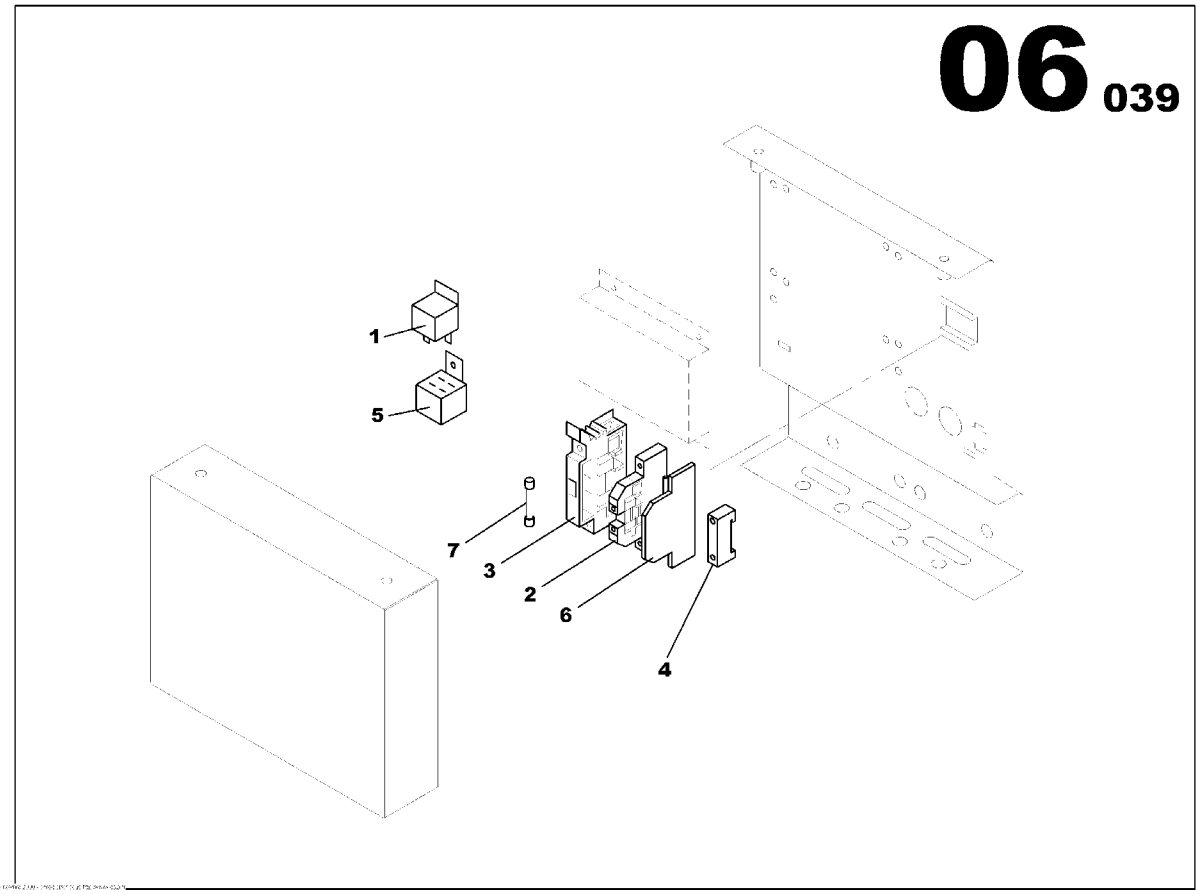

ELECTRONIC REGULATION ASSEMBLY
85637445

Part numbers listed are only parts used in this model

Item	Part No.	Description	Qty	Un	From SN	To SN	Order PN	Page
1	85408896	RELAY 12V 20/30A	1	UN			85408896	
2	85412542	TERMINAL BLOCK	1	UN			85412542	
3	17130006	FUSE HOUSING TERMINAL BLOCK	1	UN			17130006	
4	85408706	STOP	1	UN			85408706	
5	85408912	AUTOMOBILE RELAY BASE	1	UN			85408912	
6	85639060	PLASTIC COVER TERMINAL BLOCK	1	UN			85639060	
7	85639045	FUSE CYLINDRICAL 15A	1	UN			85639045	

ELECTRONIC REGULATION ASSEMBLY

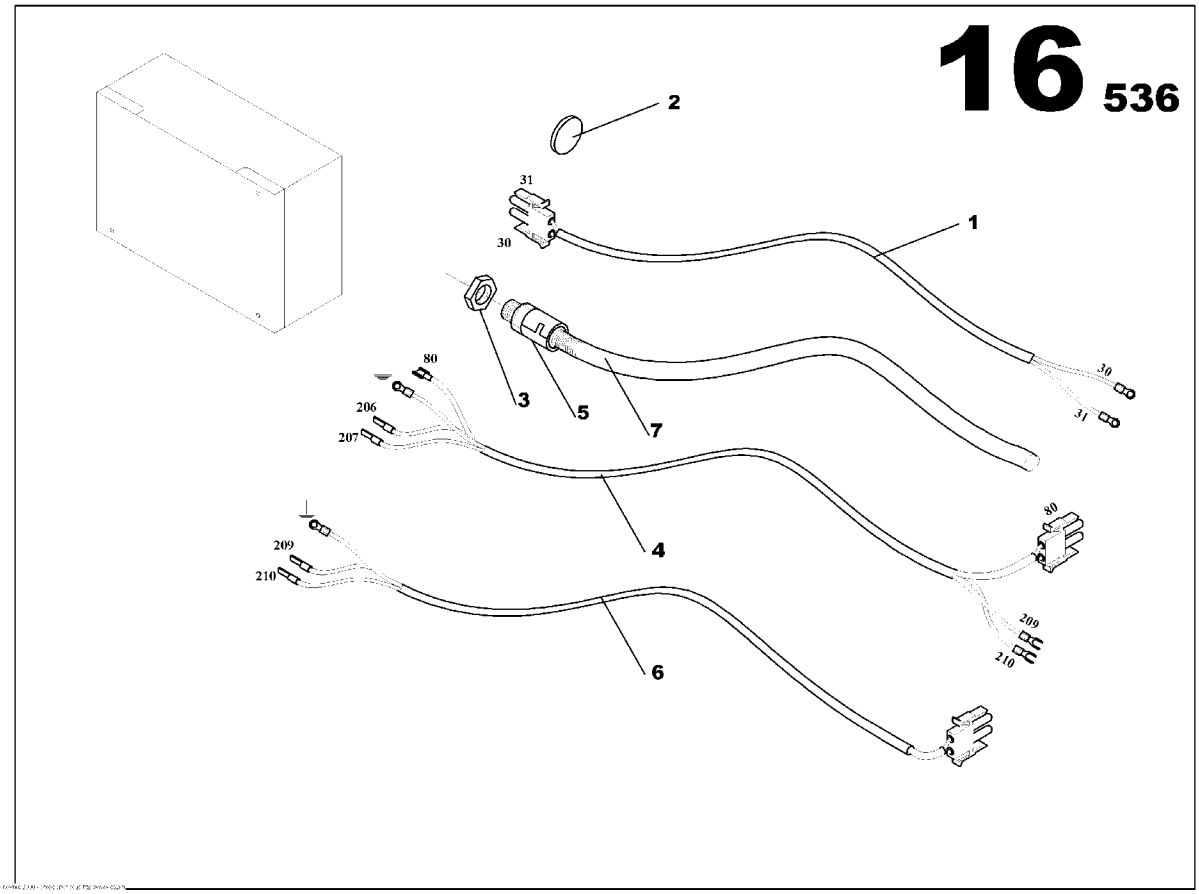

ELECTRONIC REGULATION ASSEMBLY
17130469

Part numbers listed are only parts used in this model

Item	Part No.	Description	Qty	Un	From SN	To SN	Order PN	Page
1	17130527	ELECTRONIC REGUL. SUPPLY WIRING LOOM L700-300-300	1	UN			17130527	
2	85415388	RUBBER GROMMET D22	1	UN			85415388	
3	85408664	GLAND NUT SCREW PG16	1	UN			85408664	
4	17130493	ELECTRONIC REGULATION CABLE 3x1.5mm2	1	UN			17130493	
5	85639052	PIPE UNION PG16	1	UN			85639052	
6	17130519	ELECTRONIC REGULATION CABLE 2x0.5mm2	1	UN			17130519	
7	85638708	ELECTRICAL SHAFT D19	0.5	ML			85638708	

Index

Part number	Order number	Page
85633105	85633105	6
85425841	85425841	30
85429124	85429124	308
85620854	85620854	40
85620862	85620862	36
85621571	85621571	36
85621597	85621597	34
85627925	85627925	188
85429157	85429157	190
85633188	85633188	190
85403426	85403426	20
85403434	85403434	20
85633204	85633204	18
85403517	85403517	54
85629541	85629541	52
85403525	85403525	46
85633220	85633220	42
85633295	85633295	306
85633303	85633303	302
85632867	85632867	304
85633311	85633311	46
85627164	85627164	84
17130121	17130121	52
85633378	85633378	44
17130154	17130154	52
85633386	85633386	84
17130188	17130188	50
		42
17130196	17130196	52
85403616	85403616	312

Part number	Order number	Page
85403616	85403616	238
85403632	85403632	238
85403632	85403632	312
85401040	85401040	236
85401040	85401040	310
17130204	17130204	238
17130204	17130204	312
17130212	17130212	236
17130212	17130212	310
85637437	85637437	314
85637437	85637437	240
85637445	85637445	240
85637445	85637445	314
85403699	85403699	66
85403707	85403707	66
85403715	85403715	66
85402543	85402543	124
85412948	85412948	128
85413268	85413268	128
85412872	85412872	128
85403723	85403723	66
85633410	85633410	66
17130261	17130261	64
		62
85412815	85412815	10
85413441	85413441	10
85412898	85412898	10
85633550	85633550	6
85620920	85620920	10
85404259	85404259	14

Part number	Order number	Page
85404275	85404275	6
85633675	85633675	84
85633691	85633691	72
85633709	85633709	70
85633717	85633717	68
85633741	85633741	74
85633758	85633758	68
85633816	85633816	74
85633832	85633832	72
85417459	85417459	58
17130279	17130279	52
17130287	17130287	52
17130295	17130295	60
17130303	17130303	82
17130311	17130311	80
		78
85405017	85405017	36
85401032	85401032	82
85621027	85621027	36
85634004	85634004	40
85621589	85621589	40
85634087	85634087	76
85634103	85634103	36
85634111	85634111	76
85429215	85429215	82
85621092	85621092	82
85621100	85621100	82
17130378	17130378	82
17130386	17130386	82
85492700	85492700	92

Index

Part number	Order number	Page
17130394	17130394	82
85415354	85415354	92
85415362	85415362	92
85415347	85415347	92
85415370	85415370	92
85412484	85412484	92
85412492	85412492	92
85413516	85413516	92
85497410	85497410	92
85497428	85497428	92
85497436	85497436	92
85415313	85415313	92
85509594	85509594	92
85634194	85634194	90
85634202	85634202	88
85509560	85509560	92
85509578	85509578	92
85509586	85509586	92
85633048	85633048	92
85633055	85633055	92
85633063	85633063	92
85634319	85634319	92
85406130	85406130	150
85406130	85406130	92
85406189	85406189	150
85630515	85630515	172
85630515	85630515	170
85630515	85630515	272
85630515	85630515	270
85630515	85630515	202
85630515	85630515	200
85509305	85509305	92
85416477	85416477	92
85416501	85416501	92
85412831	85412831	92
85402907	85402907	150
85402907	85402907	92
85406221	85406221	152
85406221	85406221	96
85406239	85406239	96
85406239	85406239	152
85406247	85406247	96
85406247	85406247	152
85632883	85632883	98
85632883	85632883	154
85509263	85509263	84
85621142	85621142	92
85509859	85509859	92
85509842	85509842	94
85412633	85412633	66
85634376	85634376	66
17130410	17130410	66
85505543	85505543	178
85505543	85505543	222
85505543	85505543	124
85505543	85505543	284
85505543	85505543	282
85505543	85505543	224
85505543	85505543	176
85416030	85416030	148
85415982	85415982	148
85412534	85412534	148
85415933	85415933	148
85501435	85501435	28
85491991	85491991	88
85407252	85407252	14
85407260	85407260	14
85407294	85407294	196
85407294	85407294	166
85407294	85407294	266
85407294	85407294	100
85407294	85407294	104
85636835	85636835	222
85636835	85636835	176
85636835	85636835	178
85636835	85636835	284
85636835	85636835	224
85636835	85636835	282
85636843	85636843	176
85636843	85636843	282
85636843	85636843	224
85636843	85636843	178
85636843	85636843	284
85636843	85636843	222
85636850	85636850	176
85636850	85636850	284
85636850	85636850	282
85636850	85636850	178
85636850	85636850	224
85636850	85636850	222

Index

Part number	Order number	Page
85636868	85636868	224
85636868	85636868	178
85636868	85636868	176
85636868	85636868	282
85636868	85636868	284
85636868	85636868	222
85634616	85634616	188
85634616	85634616	260
85634616	85634616	160
85634624	85634624	194
85634624	85634624	264
85634624	85634624	164
85634632	85634632	120
85634632	85634632	226
85634632	85634632	122
85634632	85634632	180
85634632	85634632	286
85634640	85634640	88
85634657	85634657	102
85634665	85634665	226
85634665	85634665	122
85634665	85634665	286
85634665	85634665	180
85634665	85634665	120
85634673	85634673	286
85634673	85634673	226
85634673	85634673	180
85634681	85634681	180
85634681	85634681	286
85634681	85634681	226

Part number	Order number	Page
85634699	85634699	180
85634699	85634699	226
85634699	85634699	120
85634699	85634699	286
85634699	85634699	122
85634707	85634707	120
85634707	85634707	122
85634715	85634715	222
85634715	85634715	282
85634715	85634715	176
85634715	85634715	284
85634715	85634715	224
85634715	85634715	178
85634723	85634723	114
85634731	85634731	118
85634749	85634749	122
85634749	85634749	120
85638377	85638377	316
85638377	85638377	242
85638385	85638385	316
85638385	85638385	242
17130428	17130428	58
85415537	85415537	150
85414829	85414829	146
85414860	85414860	148
85407682	85407682	150
85407690	85407690	148
85407708	85407708	148
85416048	85416048	148
85415545	85415545	148

Part number	Order number	Page
85499150	85499150	146
85634772	85634772	26
85621175	85621175	144
85634780	85634780	112
85634855	85634855	260
85634855	85634855	250
85634863	85634863	132
85634939	85634939	94
85621191	85621191	94
85634962	85634962	132
85635019	85635019	134
85635019	85635019	252
85635019	85635019	294
85635027	85635027	180
85635027	85635027	178
85635027	85635027	282
85635027	85635027	176
85635027	85635027	226
85635027	85635027	286
85635027	85635027	122
85635027	85635027	224
85635027	85635027	284
85635027	85635027	222
85635027	85635027	120
85635035	85635035	138
85635175	85635175	104
85635183	85635183	192
85635183	85635183	162
85635183	85635183	262
85635183	85635183	126

Index

Part number	Order number	Page
85635209	85635209	192
85635209	85635209	162
85635209	85635209	262
85635225	85635225	188
85635225	85635225	160
85635225	85635225	260
85635241	85635241	196
85635241	85635241	266
85635241	85635241	104
85635241	85635241	166
85638708	85638708	322
85638708	85638708	248
85407971	85407971	24
85621209	85621209	24
85621217	85621217	22
85408078	85408078	24
85408151	85408151	16
85408185	85408185	14
85635308	85635308	186
85635308	85635308	292
85635308	85635308	212
85635308	85635308	210
85636876	85636876	212
85636876	85636876	210
85411411	85411411	310
85635316	85635316	232
85636884	85636884	212
85636884	85636884	210
85499440	85499440	138
85499440	85499440	146

Part number	Order number	Page
85408227	85408227	108
85635340	85635340	188
85635340	85635340	260
85635340	85635340	160
85636892	85636892	276
85636892	85636892	278
85503506	85503506	310
85504017	85504017	178
85504017	85504017	176
85504017	85504017	284
85504017	85504017	282
85504017	85504017	224
85504017	85504017	222
85636900	85636900	216
85636900	85636900	214
85504025	85504025	282
85504025	85504025	178
85504025	85504025	176
85504025	85504025	284
85504025	85504025	224
85504025	85504025	222
85506541	85506541	216
85506541	85506541	214
85636918	85636918	208
85636918	85636918	206
85506517	85506517	208
85506517	85506517	206
85636926	85636926	208
85636926	85636926	206
85630663	85630663	220

Part number	Order number	Page
85630663	85630663	218
85636942	85636942	276
85636942	85636942	278
85630721	85630721	220
85630721	85630721	218
85635373	85635373	134
85635373	85635373	294
85635373	85635373	252
85504033	85504033	172
85504033	85504033	170
85504033	85504033	272
85504033	85504033	270
85504033	85504033	202
85504033	85504033	200
85635399	85635399	188
85635415	85635415	160
85635415	85635415	260
85635423	85635423	138
85621225	85621225	24
85635456	85635456	294
85635456	85635456	134
85635456	85635456	252
85635498	85635498	138
85635548	85635548	138
85635563	85635563	138
85635589	85635589	252
85635589	85635589	294
85635589	85635589	134
85635621	85635621	196
85635621	85635621	266

Index

Part number	Order number	Page
85635621	85635621	166
85635654	85635654	140
85635662	85635662	132
85638914	85638914	88
17130469	17130469	314
17130469	17130469	240
17130493	17130493	322
17130493	17130493	248
17130519	17130519	248
17130519	17130519	322
17130527	17130527	322
17130527	17130527	248
85416519	85416519	124
85408334	85408334	108
85621233	85621233	146
85408391	85408391	180
85408391	85408391	178
85408391	85408391	176
85408391	85408391	286
85408391	85408391	284
85408391	85408391	282
85408391	85408391	124
85408391	85408391	226
85408391	85408391	224
85408391	85408391	222
85408391	85408391	120
85623833	85623833	16
85623833	85623833	24
85502235	85502235	66
85413193	85413193	252

Part number	Order number	Page
85413193	85413193	294
85413193	85413193	134
85408516	85408516	300
85408516	85408516	258
85635738	85635738	260
85635738	85635738	250
85408557	85408557	142
85635761	85635761	132
85402527	85402527	124
85506061	85506061	104
85506061	85506061	166
85506061	85506061	266
85506061	85506061	196
85413276	85413276	178
85413276	85413276	176
85413276	85413276	282
85413276	85413276	224
85413276	85413276	284
85413276	85413276	222
85408656	85408656	284
85408656	85408656	282
85408656	85408656	178
85408656	85408656	176
85408656	85408656	224
85408656	85408656	222
85408664	85408664	322
85408664	85408664	248
85408664	85408664	124
85408680	85408680	146
85408680	85408680	138

Part number	Order number	Page
85408706	85408706	320
85408706	85408706	294
85408706	85408706	134
85408706	85408706	246
85408706	85408706	252
85413466	85413466	124
85412542	85412542	320
85412542	85412542	246
17130550	17130550	126
17130568	17130568	126
85402477	85402477	124
85627222	85627222	124
85415388	85415388	322
85415388	85415388	248
85408854	85408854	178
85408854	85408854	176
85408854	85408854	284
85408854	85408854	282
85408854	85408854	122
85408854	85408854	224
85408854	85408854	222
85413052	85413052	126
85412955	85412955	124
85408888	85408888	16
85408896	85408896	14
85408896	85408896	320
85408896	85408896	246
85408896	85408896	24
85408896	85408896	122
85408912	85408912	320

Index

Part number	Order number	Page
85408912	85408912	246
85408912	85408912	24
85408912	85408912	122
85412971	85412971	126
85496222	85496222	234
85635845	85635845	188
85412930	85412930	124
85415503	85415503	122
85416527	85416527	122
85413250	85413250	124
17130584	17130584	126
17130592	17130592	126
85501575	85501575	146
85501575	85501575	138
85501575	85501575	28
85499663	85499663	104
85499663	85499663	166
85499663	85499663	266
85499663	85499663	196
85499689	85499689	146
85508570	85508570	280
85426112	85426112	174
85426112	85426112	274
85426112	85426112	204
85639045	85639045	320
85639045	85639045	246
85426138	85426138	174
85426138	85426138	274
85426138	85426138	204
85426146	85426146	174
85426146	85426146	274
85426146	85426146	204
85426120	85426120	174
85426120	85426120	130
85426120	85426120	274
85426120	85426120	204
85639052	85639052	322
85639052	85639052	248
85639060	85639060	320
85639060	85639060	246
85623809	85623809	220
85623809	85623809	218
17130618	17130618	146
85635886	85635886	294
85635886	85635886	252
85504272	85504272	276
85504272	85504272	278
85623668	85627495	178
85623668	85627495	176
85623668	85627495	284
85623668	85627495	282
85623668	85627495	224
85623668	85627495	222
85635894	85635894	180
85635894	85635894	286
85635894	85635894	124
85635894	85635894	226
85635894	85635894	120
85635902	85635902	180
85635902	85635902	286
85635902	85635902	124
85635902	85635902	226
85635902	85635902	120
85635944	85635944	294
85635944	85635944	134
85635944	85635944	252
85635951	85635951	138
85635969	85635969	138
85632792	85632792	294
85632792	85632792	134
85632792	85632792	252
85635993	85635993	138
85636033	85636033	294
85636033	85636033	134
85636033	85636033	252
85505154	85505154	174
85505154	85505154	274
85505154	85505154	204
85639086	85639086	108
85631422	85631422	106
85631422	85631422	166
85631422	85631422	266
85631422	85631422	124
85631422	85631422	196
85632362	85632362	106
85632362	85632362	124
85632370	85632370	104
17130683	17130683	148
85639250	85639250	172
85639250	85639250	170

Index

Part number	Order number	Page
85639250	85639250	202
85639250	85639250	200
85636991	85636991	272
85636991	85636991	270
85411551	85411551	188
85411551	85411551	160
85411569	85411569	260
85636157	85636157	188
85636181	85636181	188
17130691	17130691	260
17130709	17130709	310
17130717	17130717	310
85636231	85636231	188
85636249	85636249	188
85636272	85636272	188
85636272	85636272	160
85636272	85636272	260
17130733	17130733	250
85636280	85636280	116
85636298	85636298	178
85636298	85636298	176
85636298	85636298	284
85636298	85636298	282
85636298	85636298	224
85636298	85636298	222
17130741	17130741	188
17130741	17130741	160
17130741	17130741	260
17130758	17130758	116
85636314	85636314	118

Part number	Order number	Page
85409084	85409084	148
85409084	85409084	294
85409084	85409084	134
85409084	85409084	252
85409092	85409092	294
85409092	85409092	134
85409092	85409092	252
85409126	85409126	148
85409175	85409175	114
85636330	85636330	296
85636330	85636330	136
85636330	85636330	254
85626356	85626356	110
85639326	85639326	110
85636348	85636348	138
85429553	85429553	298
85429553	85429553	256
85429959	85429959	306
85507911	85507911	110
85507911	85507911	48
85507911	85507911	296
85507911	85507911	136
85507911	85507911	254
85430585	85430585	318
85430585	85430585	244
85507929	85507929	110
85409217	85409217	148
85409225	85409225	156
85409233	85409233	156
85409241	85409241	156

Part number	Order number	Page
85636363	85636363	298
85636363	85636363	256
17130766	17130766	122
85636389	85636389	48
85636389	85636389	178
85636389	85636389	176
85636389	85636389	318
85636389	85636389	284
85636389	85636389	282
85636389	85636389	244
85636389	85636389	224
85636389	85636389	222
85631547	85631547	318
85631547	85631547	244
85636421	85636421	46
85636439	85636439	294
85636439	85636439	134
85636439	85636439	252
85636454	85636454	294
85636454	85636454	252
85639391	85639391	108
85639425	85639425	316
85639425	85639425	242
85509222	85509222	54
85409266	85409266	306
85415719	85415719	20
85409274	85409274	46
85409282	85409282	46
85426377	85426377	306
85409290	85409290	306

Index

Part number	Order number	Page
85409332	85409332	306
17130790	17130790	38
85621241	85621241	20
85625010	85625010	306
85429421	85429421	72
85412914	85412914	20
85500544	85500544	36
85409399	85409399	12
85409407	85409407	10
85417772	85417772	58
85409472	85409472	10
17130816	17130816	56
85621258	85621258	36
85621266	85621266	48
17130824	17130824	56
85409514	85409514	18
85490811	85490811	60
85410298	85410298	20
85409522	85409522	46
85413755	85413755	190
85413722	85413722	94
85631802	85631802	306
85416436	85416436	56
85416444	85416444	20
85416428	85416428	48
85490860	85490860	18
85490860	85490860	18
85636504	85636504	6
85621282	85621282	36
85621290	85621290	36

Part number	Order number	Page
85636538	85636538	10
85506467	85506467	84
85505634	85505634	118
85505634	85505634	124
85413797	85413797	124
85501492	85501492	78
85500197	85500197	86
85500221	85500221	86
85503761	85503761	84
85636553	85636553	84
85636587	85636587	184
85636587	85636587	178
85636587	85636587	176
85636587	85636587	290
85636587	85636587	284
85636587	85636587	282
85636587	85636587	230
85636587	85636587	224
85636587	85636587	222
85636595	85636595	178
85636595	85636595	176
85636595	85636595	284
85636595	85636595	282
85636595	85636595	224
85636595	85636595	222
85636611	85636611	184
85636611	85636611	290
85636611	85636611	230
85639573	85639573	168
85639573	85639573	268

Part number	Order number	Page
85639573	85639573	198
85639599	85639599	188
85639599	85639599	160
85639599	85639599	260
85621340	85621340	82
85636652	85636652	296
85636652	85636652	136
85636652	85636652	254
85632016	85632016	94
35308030	35308030	8
85400976	85400976	8
85402717	85402717	8
85401180	85401180	8
85400885	85400885	8
85401099	85401099	8
85401172	85401172	8
85621357	85621357	8
85621365	85621365	8
85621373	85621373	8
85621381	85621381	8
85628030	85628030	8
85402451	85402451	32
85425858	85425858	32
85425866	85425866	32
85425882	85425882	32
85425973	85425973	32
85508752	85508752	32
85508851	85508851	32
85508893	85508893	32
85508943	85508943	32

Index

Part number	Order number	Page
85508992	85508992	32
85509032	85509032	32
85509081	85509081	32
85400679	85400679	12
85400703	85400703	12
85501252	85501252	12
85501336	85501336	12
85636975	85636975	216
85636975	85636975	214
85506657	85506657	208
85506657	85506657	206
85506640	85506640	208
85506640	85506640	206
85402519	85402519	178
85402519	85402519	176
85402519	85402519	284
85402519	85402519	282
85402519	85402519	224
85402519	85402519	222
17130881	17130881	122
17130899	17130899	124
17130907	17130907	122
17130915	17130915	122
85505717	85505717	124
85505691	85505691	122
17130923	17130923	122
17130931	17130931	122
17130949	17130949	122
17130956	17130956	122
17130964	17130964	122

Part number	Order number	Page
17130972	17130972	122
17130980	17130980	122
17130998	17130998	122
17131004	17131004	122
17131012	17131012	122
17131020	17131020	122
17131038	17131038	122
17131046	17131046	124
17131053	17131053	124
17131061	17131061	124
17131079	17131079	124
17131087	17131087	124
17131095	17131095	124
17131103	17131103	126
85503522	85503522	178
85503522	85503522	176
85503522	85503522	284
85503522	85503522	282
85503522	85503522	224
85503522	85503522	222
85621399	85621399	38
85639896	85639896	38
17131111	17131111	124
85410108	85410108	10
85636694	85636694	180
85636694	85636694	286
85636694	85636694	226
85636694	85636694	120
17131137	17131137	124
17130006	17130006	320

Part number	Order number	Page
17130006	17130006	246
17131145	17131145	126
85636710	85636710	138
17131152	17131152	126
85632206	85632206	306
17131160	17131160	318
17131160	17131160	244
85410140	85410140	148
85410157	85410157	110
85636728	85636728	298
85636728	85636728	256
85429967	85429967	318
85429967	85429967	306
85429967	85429967	244
85636736	85636736	138
85429793	85429793	110
85429793	85429793	48
85636744	85636744	296
85636744	85636744	254
85636744	85636744	136
85636751	85636751	138
85429728	85429728	318
85429728	85429728	244