INGERSOLL-RAND

G330

PARTS MANUAL

17135633

Doosan purchased Bobcat Company from Ingersoll-Rand Company in 2007. Any reference to Ingersoll-Rand Company or use of trademarks, service marks, logos, or other proprietary identifying marks belonging to Ingersoll-Rand Company in this manual is historical or nominative in nature, and is not meant to suggest a current affiliation between Ingersoll-Rand Company and Doosan Company or the products of either.

G330 EDITION:05/08/2004

33519017801_0_1

Revised (01-13)

AFTERMARKET - 50 Hertz Generators

For more information on how to order parts or information regarding your local distributor (Europe, Middle East, Africa) please contact:

Facility Details **Coordonnées du Site** **Unternehmensdetails** **Dirección**	Ingersoll-Rand European Sales Ltd Portable Power Paragon Business Park Chorley New Road, Horwich Bolton BL6 6JN United Kingdom
Telephone **Téléphone** **Telefon** **Teléfono**	+44 (0) 1204 690 690
Fax	+44 (0) 1204 690 366
Emergency order phone **Numéro d'urgence pour commandes** **Dringende Aufträge, Telefon** **Teléfono de pedidos de urgencia**	+44 (0) 777 6170921
Office hours **Heures d'ouverture** **Bürostunden** **Horas de oficina**	Mon-Fri 8:00am to 4:30pm (GMT)

Telephone contact directory
Numéros des contacts
Telefonkontaktverzeichnis
Teléfonos de contacto

Harry Dale Aftermarket Marketing Manager	+44 (0) 1204 690 541
Malcolm Stott Marketing Analyst	+44 (0) 1204 690 396
Ian Parr Parts Co-ordinator	+44 (0) 1204 690 465
Howard Connolly Parts Co-ordinator	+44 (0) 1204 690 641
Martin James Parts Co-ordinator MEA	+44 (0) 1204 690 329

Imprimé avec FinePrint 2000 - enregistrer sous http://www.gsd.fr

G330

Non illustré
Not illustrated

G330

Part numbers listed are only parts used in this model

Item	Part No.	Description	Qty	Un	From SN	To SN	Order PN	Page
1		G330 *-Basic Version*	1	UN				3
2		AUTO START OPTION	1	UN				217
3		3 WAYS FUEL VALVES OPTION	1	UN				233
4		REINFORCED INSULATION OPTION	1	UN				239
5		EXPLOSIVE ATHMOSPHERE OPTION	1	UN				241

Non illustré
Not illustrated

G330

Part numbers listed are only parts used in this model

Item	Part No.	Description	Qty	Un	From SN	To SN	Order PN	Page
1		ENGINE FUNCTION	1	UN				5
2		ALTERNATOR FUNCTION	1	UN				41
3		COOLER FUNCTION	1	UN				55
4		FUEL FUNCTION	1	UN				65
5		STARTING FUNCTION	1	UN				85
6		EXHAUST FUNCTION	1	UN				91
7		FRAME FUNCTION	1	UN				101
8		CANOPY FUNCTION	1	UN				111
9		ELECTRICAL FUNCTION	1	UN				137
10		DOCUMENTATION OPTION	1	UN				

ENGINE FUNCTION

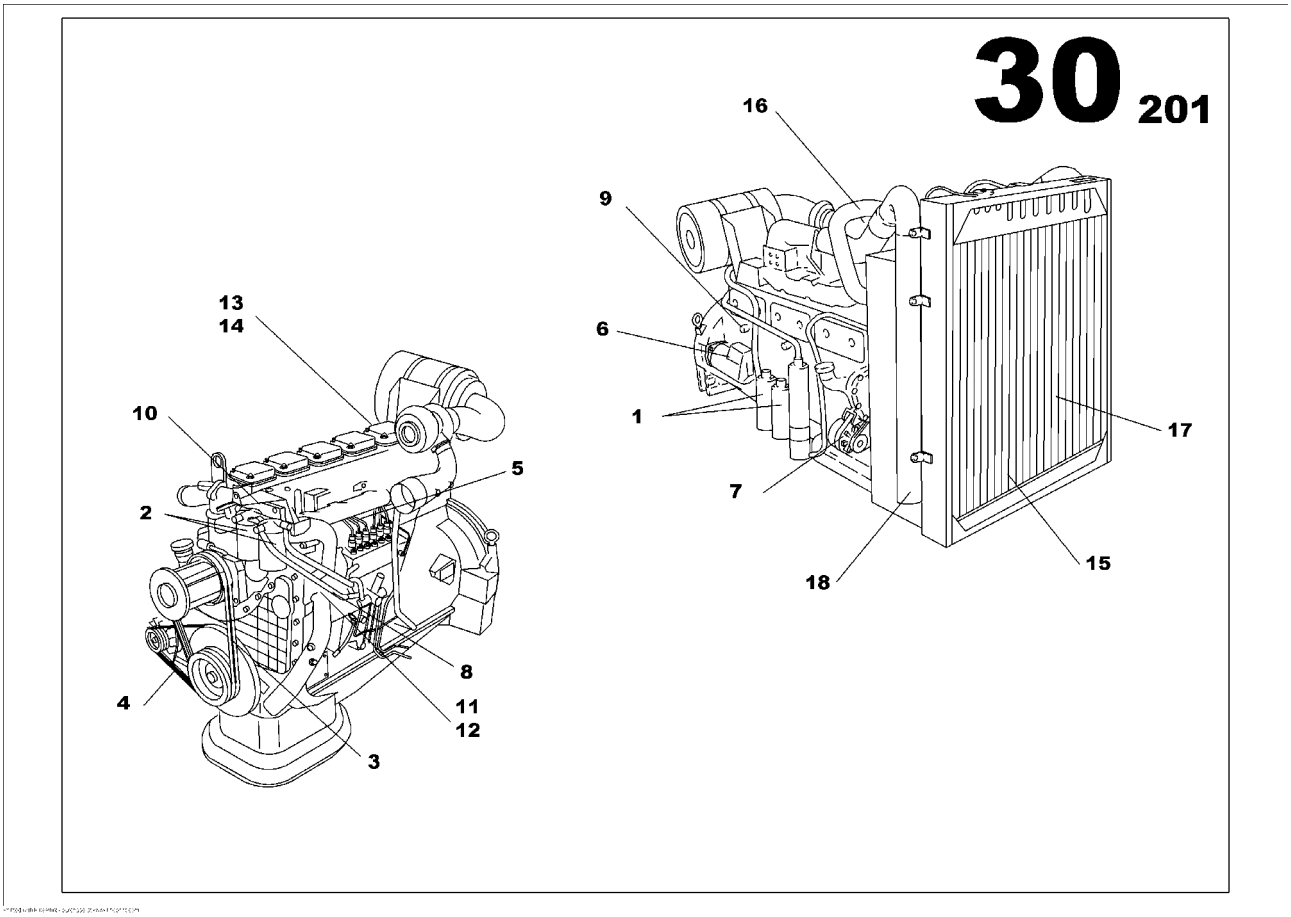

ENGINE FUNCTION

Part numbers listed are only parts used in this model

Item	Part No.	Description	Qty	Un	From SN	To SN	Order PN	Page
1	85623106	ENGINE VOLVO TAD1032 SAE 1/14	1	UN			85623106	7
2	85623148	OIL SUMP DRAIN PUMP ASSEMBLY	1	UN			85623148	9
3	85623171	AIR FILTER HEAVY DUTY ASSEMBLY	1	UN			85623171	13
4	85427391	TRANS. WATER TEMPERATURE-OIL PRESSURE ASSEMBLY *-Provided with the Engine*	1	UN			85427391	
5		SPEED CONTROL FUNCTION	1	UN				17
6		ENGINE WIRING FUNCTION	1	UN				31

ENGINE VOLVO TAD1032 SAE 1/14

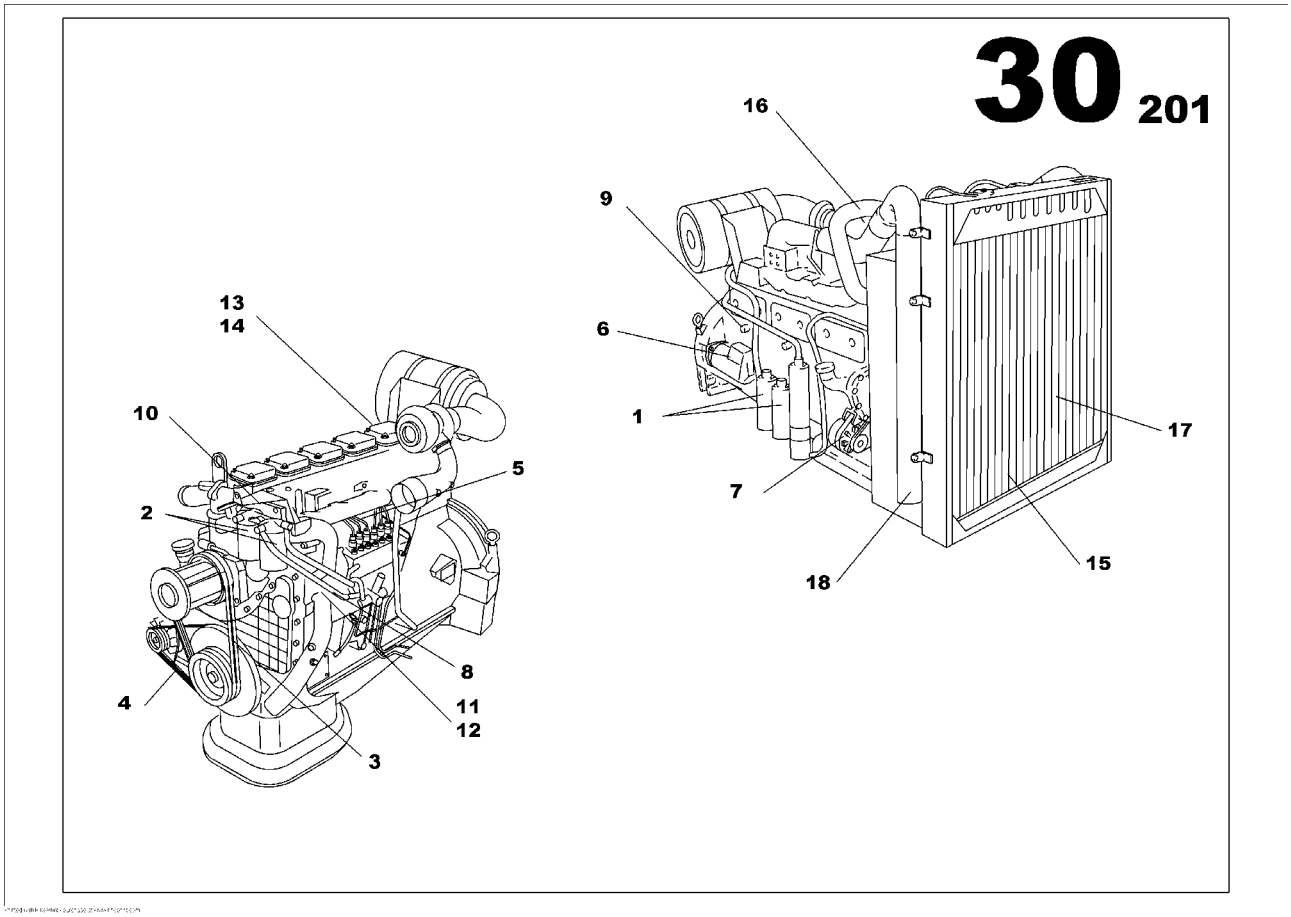

ENGINE VOLVO TAD1032 SAE 1/14
85623106

Part numbers listed are only parts used in this model

Item	Part No.	Description	Qty	Un	From SN	To SN	Order PN	Page
1	85401891	LUBE OIL FILTER	2	UN			85401891	
2	85401628	FUEL FILTER	2	UN			85401628	
3	85401594	FAN BELT	1	UN			85401594	
4	85401370	ALTERNATOR BELT	1	UN			85401370	
5	85627347	COMPLETE INJECTOR	6	UN			85627347	
6	17141359	ELECTRICAL STARTER	1	UN			17141359	
7	85401404	ALTERNATOR	1	UN			85401404	
8	85627297	WATER PUMP	1	UN			85627297	
9	85401990	MANOCONTACT	1	UN			85401990	
10	85402139	TEMPERATURE SWITCH	1	UN			85402139	
11	85402170	GASKET - THERMOSTAT	1	UN			85402170	
12	85402162	THERMOSTAT	1	UN			85402162	
13	85627271	ROCKER COVER GASKET	6	UN			85627271	
14	85426203	ROCKER COVER GASKET	6	UN			85426203	
15	85425825	RADIATOR	1	UN			85425825	
16	85426096	RADIATOR HOSE	1	UN			85426096	
17	85426088	HOSE	1	UN			85426088	
18	85426104	COOLER	1	UN			85426104	

OIL SUMP DRAIN PUMP ASSEMBLY

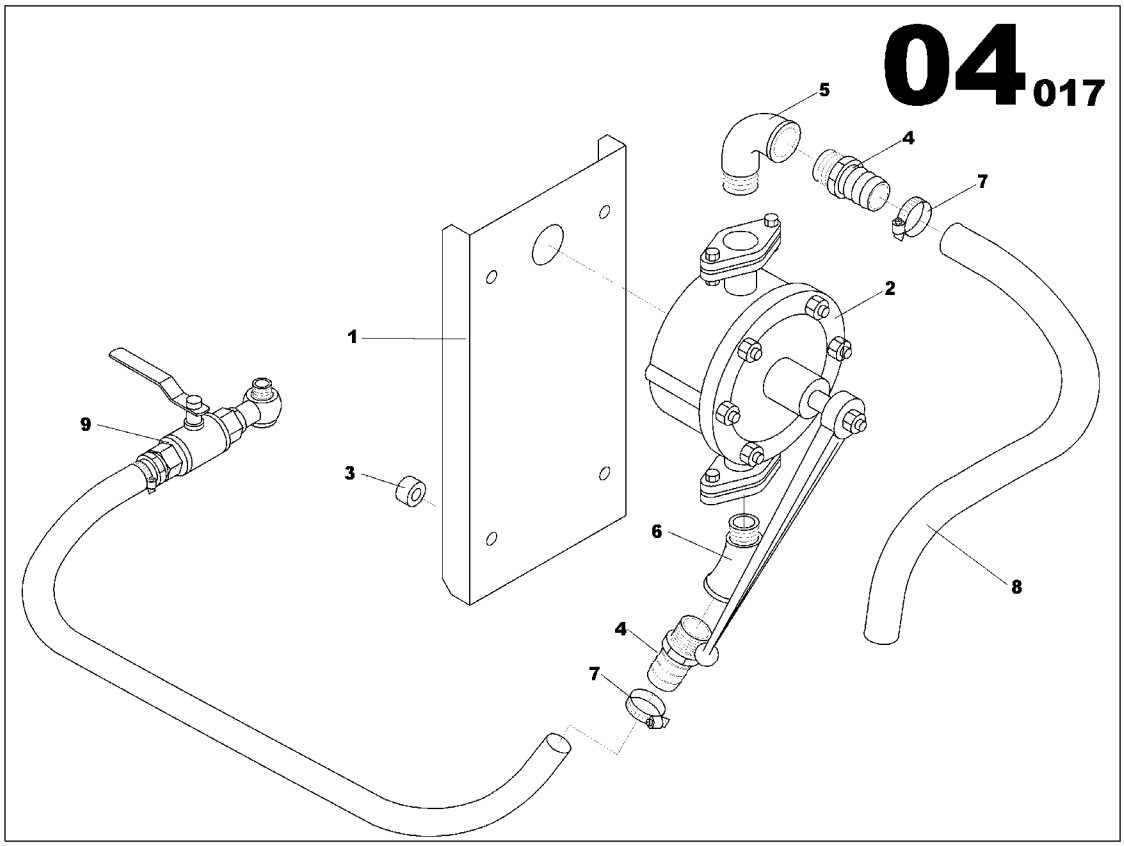

OIL SUMP DRAIN PUMP ASSEMBLY
85623148

Part numbers listed are only parts used in this model

Item	Part No.	Description	Qty	Un	From SN	To SN	Order PN	Page
1	85424018	OIL SUMP PUMP BRACKET VO 10/12L	1	UN			85424018	
2	85422616	HYDRAULIC MANUAL PUMP	1	UN			85422616	
3	85421204	SPACER Th10 D15	2	UN			85421204	
4	85622967	PIPE UNION MAL/MAL 3/4G	2	UN			85622967	
5	85423093	PIPE UNION ELBOW 90° MAL/FEM 3/4G	1	UN			85423093	
6	85423044	PIPE UNION ELBOW 45° MAL/FEM 3/4G	1	UN			85423044	
7	85409423	HOSE CLIP D20/32	2	UN			85409423	
8	85629392	FLEXIBLE HOSE D25x31	0.6	ML			85629392	
9	85501930	OIL SUMP DRAIN TAP ASSEMBLY	1	UN			85501930	11

OIL SUMP DRAIN TAP ASSEMBLY

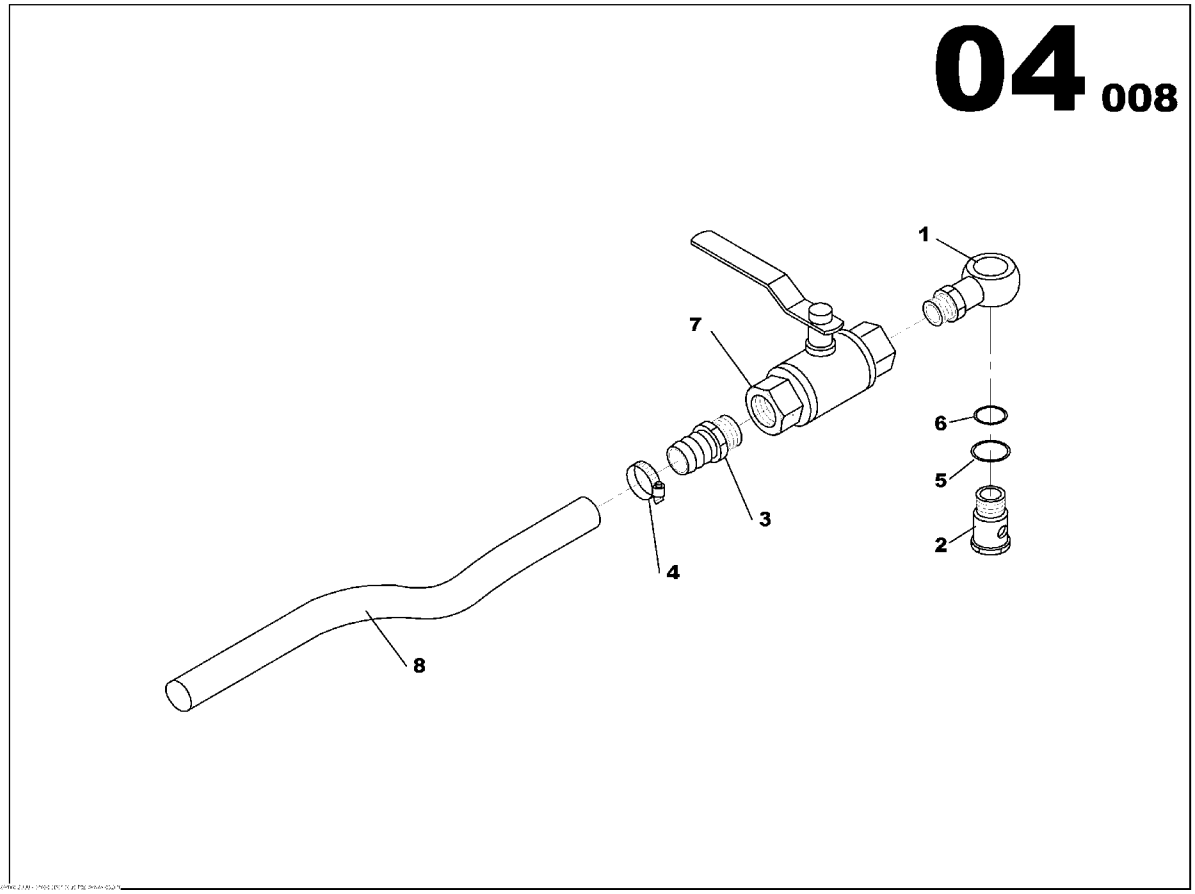

OIL SUMP DRAIN TAP ASSEMBLY
85501930

Part numbers listed are only parts used in this model

Item	Part No.	Description	Qty	Un	From SN	To SN	Order PN	Page
1	85424901	BANJO SCREW M24x1.5 L45	1	UN			85424901	
2	85423119	PIPE UNION BANJO D25.3 - 3/4G	1	UN			85423119	
3	85409423	HOSE CLIP D20/32	1	UN			85409423	
4	85629392	FLEXIBLE HOSE D25x31	1.5	ML			85629392	
5	85622967	PIPE UNION MAL/MAL 3/4G	1	UN			85622967	
6	85421758	GASKET D26x32	1	UN			85421758	
7	85421741	GASKET D24x32	1	UN			85421741	
8	85424885	2 WAYS VALVE	1	UN			85424885	

AIR FILTER HEAVY DUTY ASSEMBLY

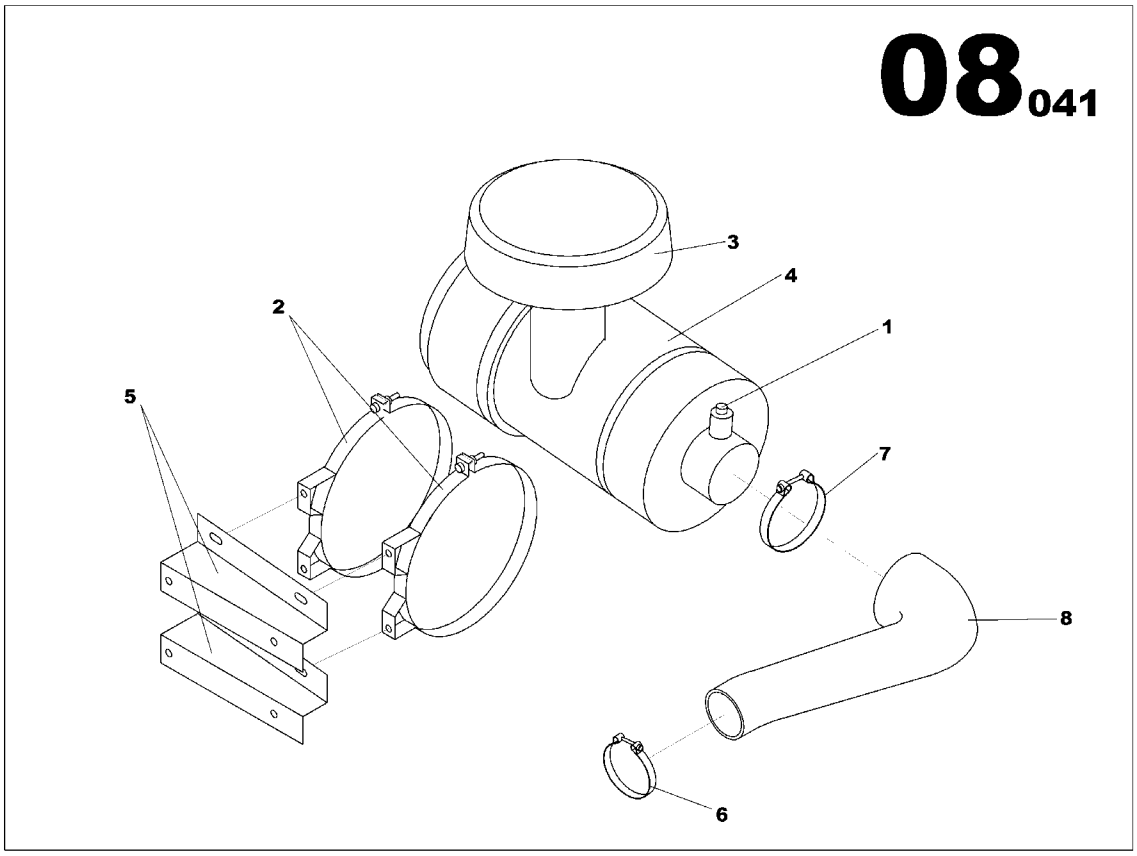

AIR FILTER HEAVY DUTY ASSEMBLY
85623171

Part numbers listed are only parts used in this model

Item	Part No.	Description	Qty	Un	From SN	To SN	Order PN	Page
1	85413581	AIR RESTRICTION INDICATOR	1	UN			85413581	
2	85417699	AIR CLEANER CLAMP D381	2	UN			85417699	
3	85417541	RAIN CAP	1	UN			85417541	
4	85421444	AIR FILTER HEAVY DUTY	1	UN			85421444	15
5	85623189	AIR FILTER BRACKET	2	UN			85623189	
6	85425254	T BOLT CLAMP D113/121	1	UN			85425254	
7	85417723	T BOLT CLAMP D162/174	1	UN			85417723	
8	85623676	RUBBER HOSE ELBOW D101,5	1	UN			85623676	

AIR FILTER HEAVY DUTY

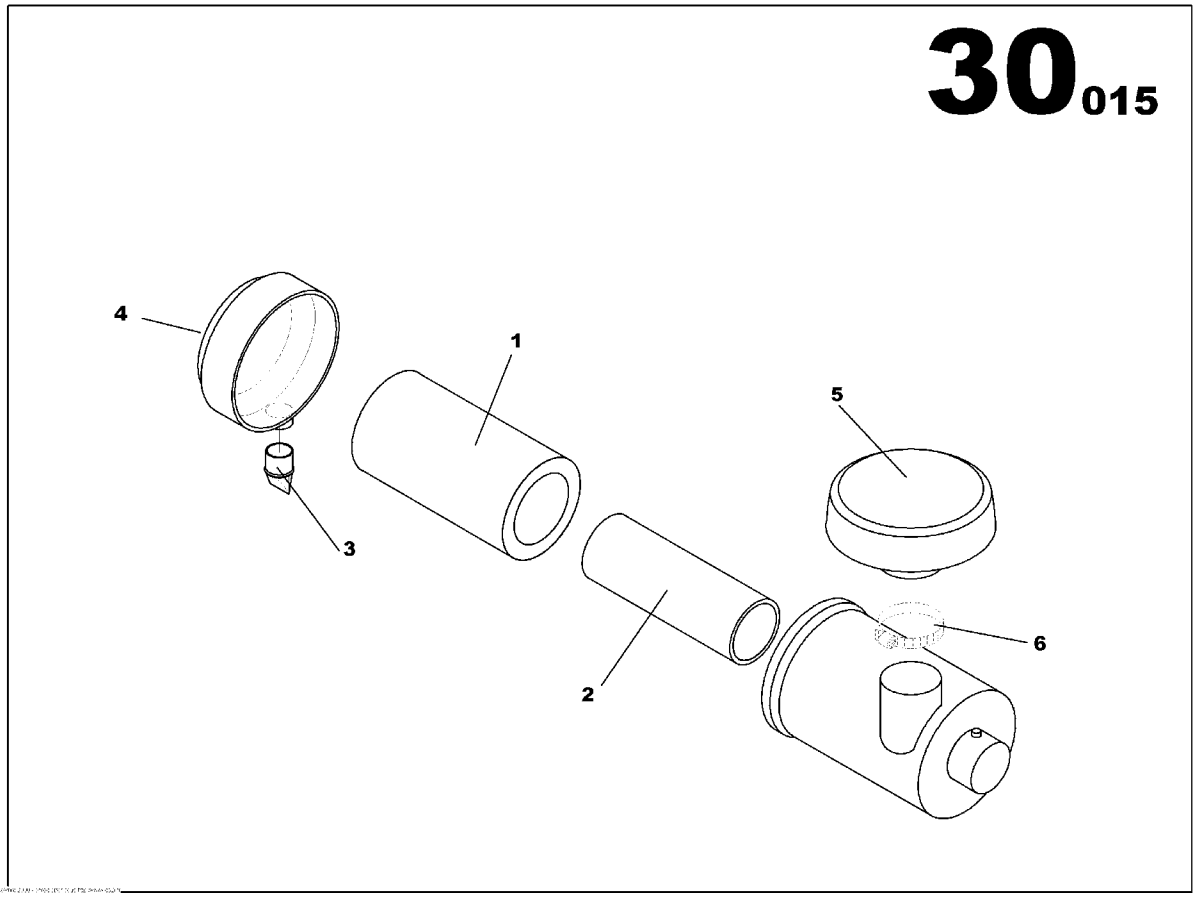

AIR FILTER HEAVY DUTY
85421444

Part numbers listed are only parts used in this model

Item	Part No.	Description	Qty	Un	From SN	To SN	Order PN	Page
1	85401339	AIR FILTER CARTRIDGE	1	UN			85401339	
2	85401354	AIR FILTER CARTRIDGE	1	UN			85401354	
3	85501229	VACUATOR VALVE	1	UN			85501229	
4	85501294	DUST CUP	1	UN			85501294	
5	85417541	RAIN CAP	1	UN			85417541	
6	85501880	HOSE CLIP D180/200	1	UN			85501880	

SPEED CONTROL FUNCTION

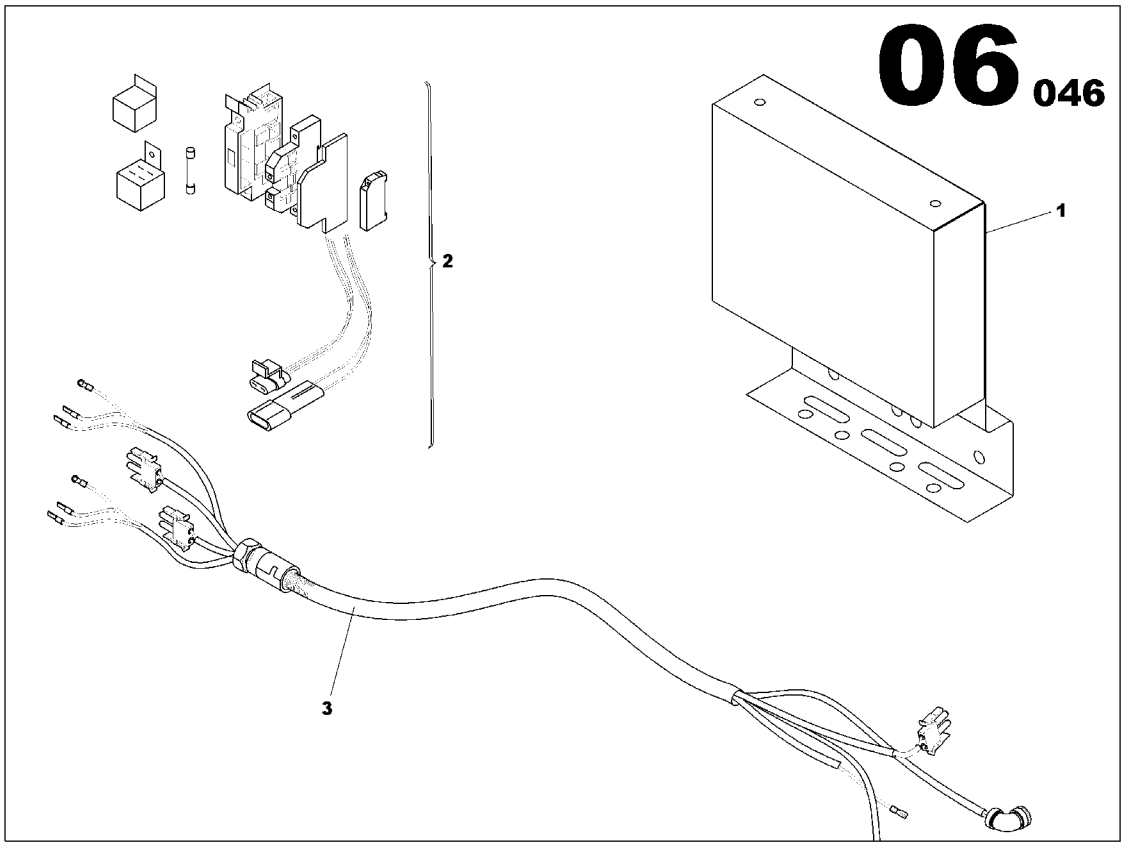

SPEED CONTROL FUNCTION

Part numbers listed are only parts used in this model

Item	Part No.	Description	Qty	Un	From SN	To SN	Order PN	Page
1	17137548	ELECTRONIC REGULATION ASSEMBLY	1	UN			17137548	19
2	85411437	WIRING LOOM C105	1	UN			85411437	

ELECTRONIC REGULATION ASSEMBLY

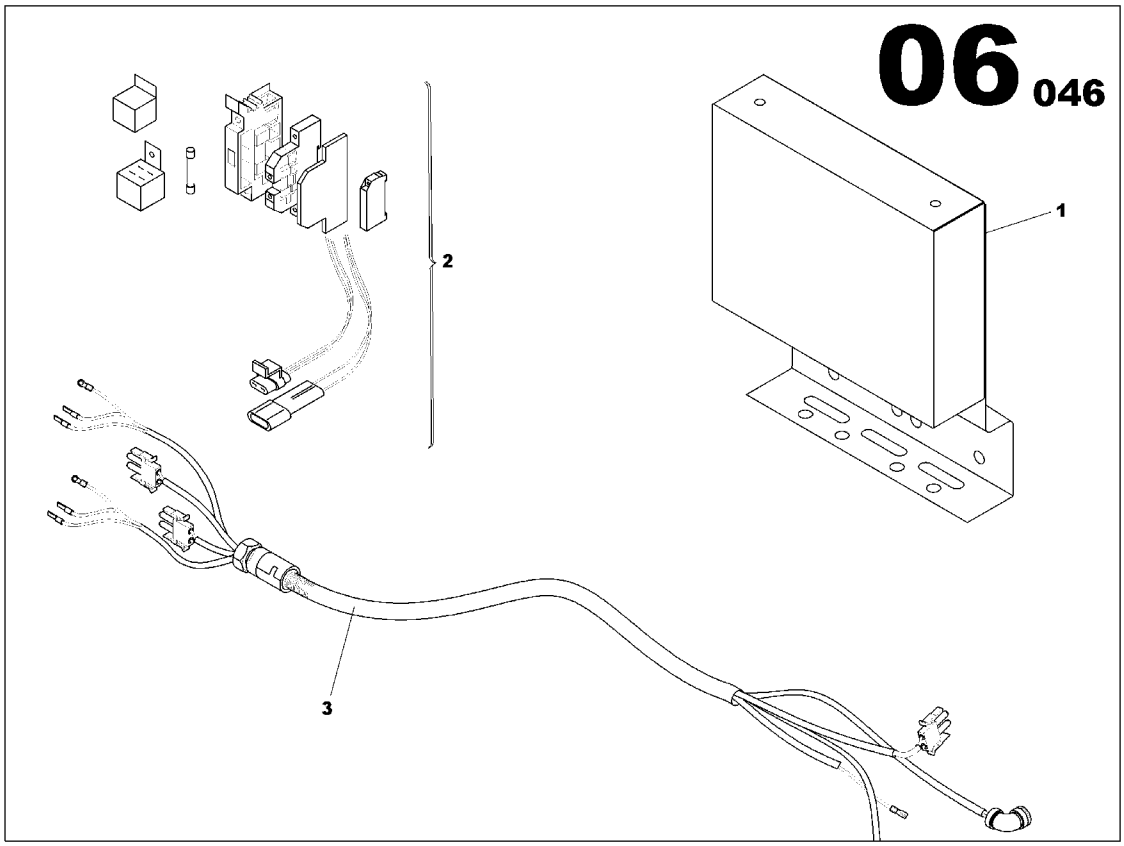

ELECTRONIC REGULATION ASSEMBLY
17137548

Part numbers listed are only parts used in this model

Item	Part No.	Description	Qty	Un	From SN	To SN	Order PN	Page
1	17137530	ELECTRONIC REGULATION ASSEMBLY	1	UN			17137530	21

ELECTRONIC REGULATION ASSEMBLY

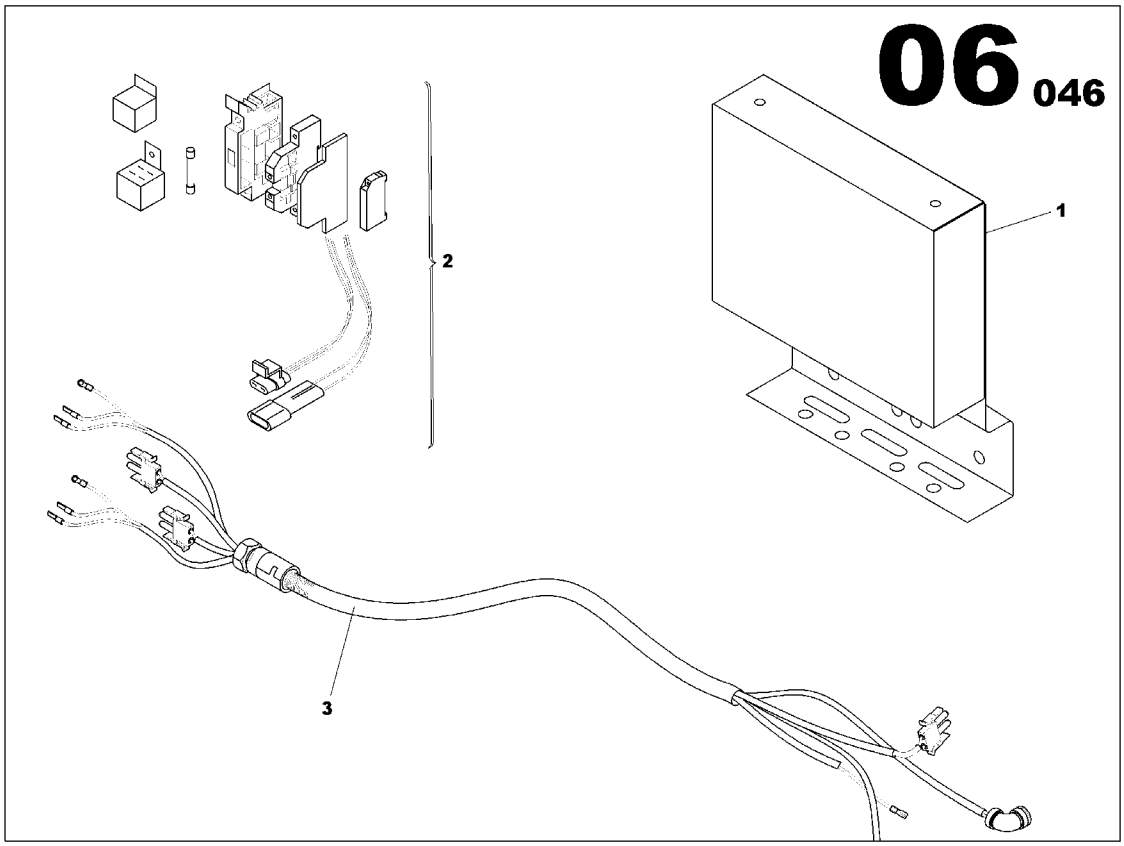

ELECTRONIC REGULATION ASSEMBLY
17137530

Part numbers listed are only parts used in this model

Item	Part No.	Description	Qty	Un	From SN	To SN	Order PN	Page
1	85637437	ELECTRONIC REGULATION ASSEMBLY	1	UN			85637437	23
2	17137571	ELECTRONIC REGULATION ASSEMBLY	1	UN			17137571	27
3	17140443	ELECTRONIC REGULATION ASSEMBLY	1	UN			17140443	29

ELECTRONIC REGULATION ASSEMBLY

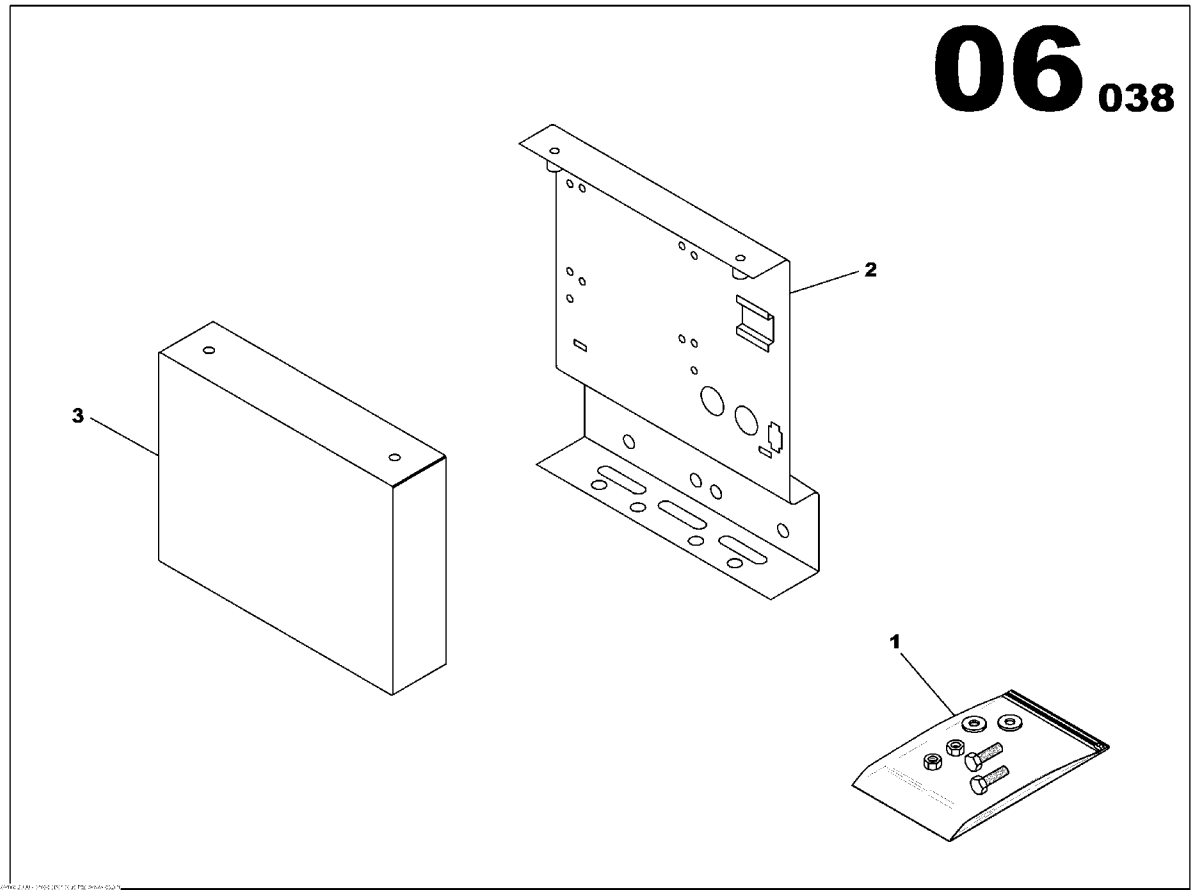

ELECTRONIC REGULATION ASSEMBLY
85637437

Part numbers listed are only parts used in this model

Item	Part No.	Description	Qty	Un	From SN	To SN	Order PN	Page
1	85639425	SCREWS ASSEMBLY	1	UN			85639425	25
2	85638377	REGULATOR BRACKET	1	UN			85638377	
3	85638385	REGULATOR HOUSING COVER	1	UN			85638385	

SCREWS ASSEMBLY

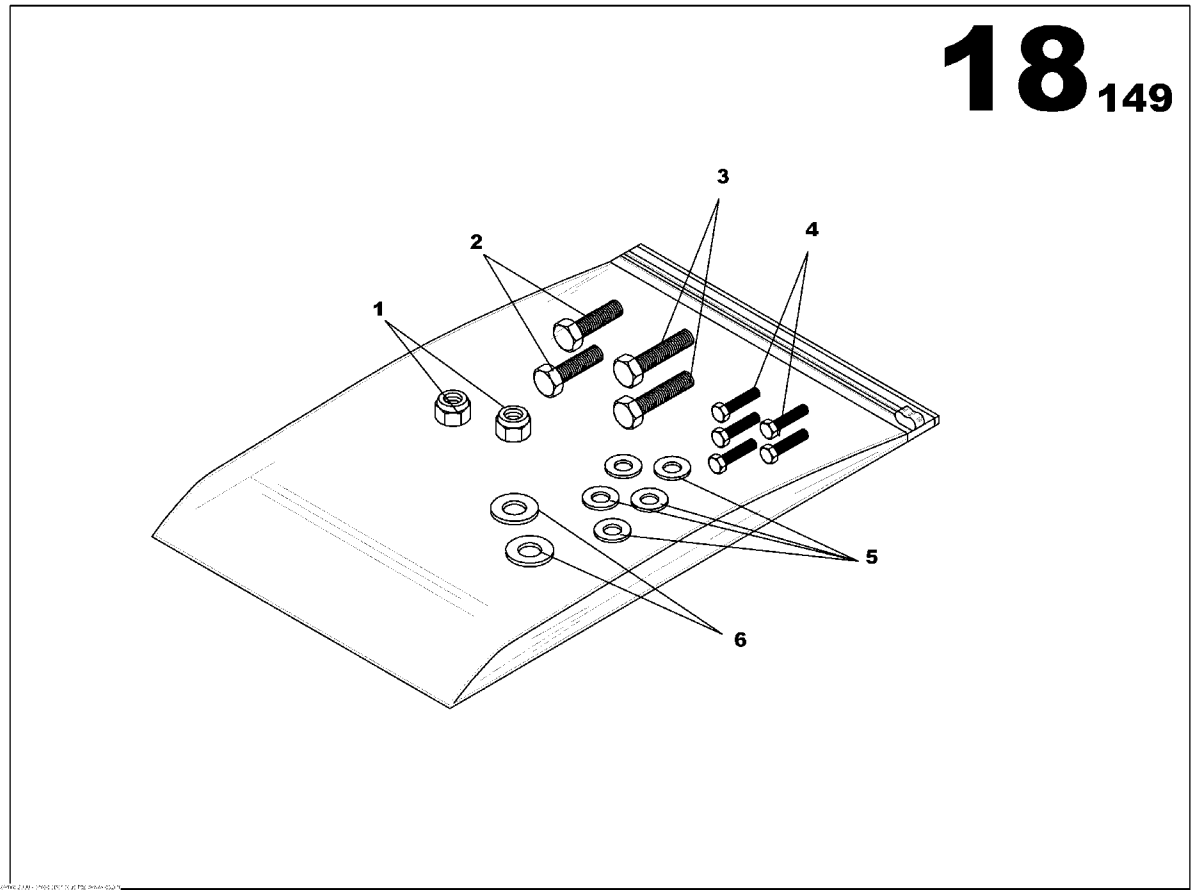

SCREWS ASSEMBLY
85639425

Part numbers listed are only parts used in this model

Item	Part No.	Description	Qty	Un	From SN	To SN	Order PN	Page
1	85430585	NUT M10	2	UN			85430585	
2	85636389	SCREW H M6x16	2	UN			85636389	
3	85631547	SCREW H M10x25	2	UN			85631547	
4	17131160	SCREW H M5x16	5	UN			17131160	
5	85429967	WASHER 5x12	5	UN			85429967	
6	85429728	WASHER D10x22	2	UN			85429728	

ELECTRONIC REGULATION ASSEMBLY

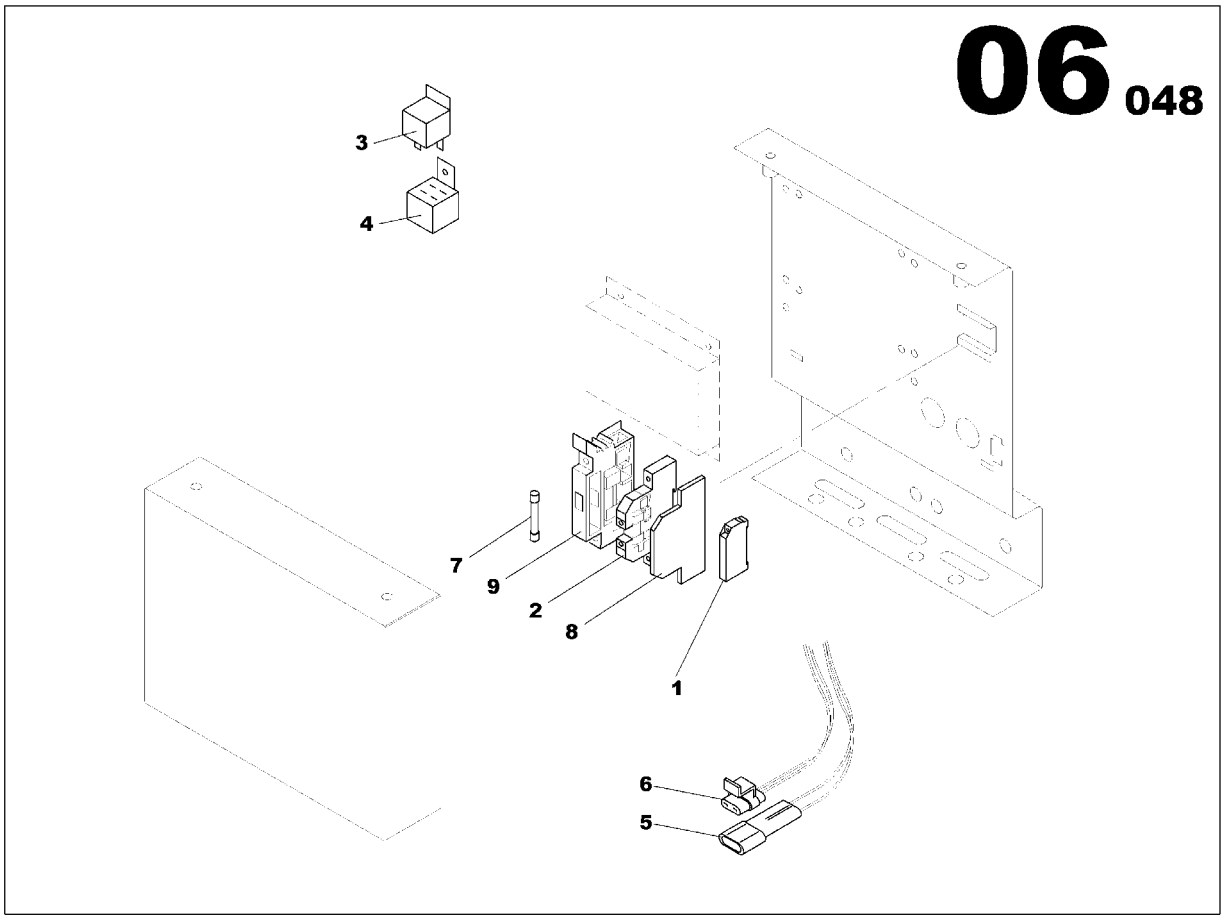

ELECTRONIC REGULATION ASSEMBLY
17137571

Part numbers listed are only parts used in this model

Item	Part No.	Description	Qty	Un	From SN	To SN	Order PN	Page
1	85408706	STOP	1	UN			85408706	
2	85412542	TERMINAL BLOCK	1	UN			85412542	
3	85423366	RELAY 24V 10/20A	1	UN			85423366	
4	85408912	AUTOMOBILE RELAY BASE	1	UN			85408912	
5	85412989	2 POINTS APPLIANCE CONNECTOR	1	UN			85412989	
6	85412997	APPLIANCE CONNECTOR	1	UN			85412997	
7	85639045	FUSE CYLINDRICAL 15A	1	UN			85639045	
8	85639060	PLASTIC COVER TERMINAL BLOCK	1	UN			85639060	
9	17130006	FUSE HOUSING TERMINAL BLOCK	1	UN			17130006	

ELECTRONIC REGULATION ASSEMBLY

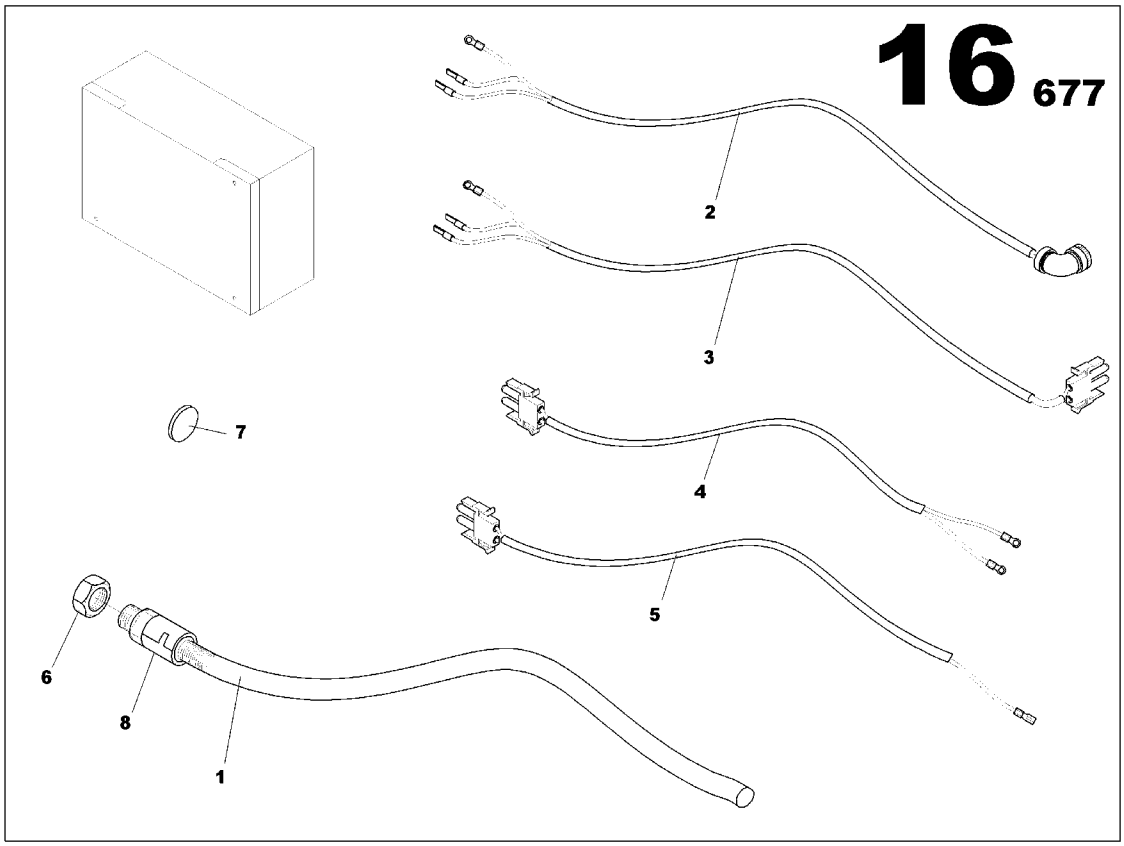

ELECTRONIC REGULATION ASSEMBLY
17140443

Part numbers listed are only parts used in this model

Item	Part No.	Description	Qty	Un	From SN	To SN	Order PN	Page
1	85638708	ELECTRICAL SHAFT D19	1.1	ML			85638708	
2	17140476	ELECTRONIC REGULATION CABLE 2x1.5mm2	1	UN			17140476	
3	17140484	ELECTRONIC REGULATION CABLE	1	UN			17140484	
4	17140492	ELECTRONIC REGUL. SUPPLY WIRING LOOM L2500-300-300	1	UN			17140492	
5	17140526	ELECTRONIC REGULATION WIRING LOOM	1	UN			17140526	
6	85408664	GLAND NUT SCREW PG16	1	UN			85408664	
7	85415388	RUBBER GROMMET D22	1	UN			85415388	
8	85639052	PIPE UNION PG16	1	UN			85639052	

ENGINE WIRING FUNCTION

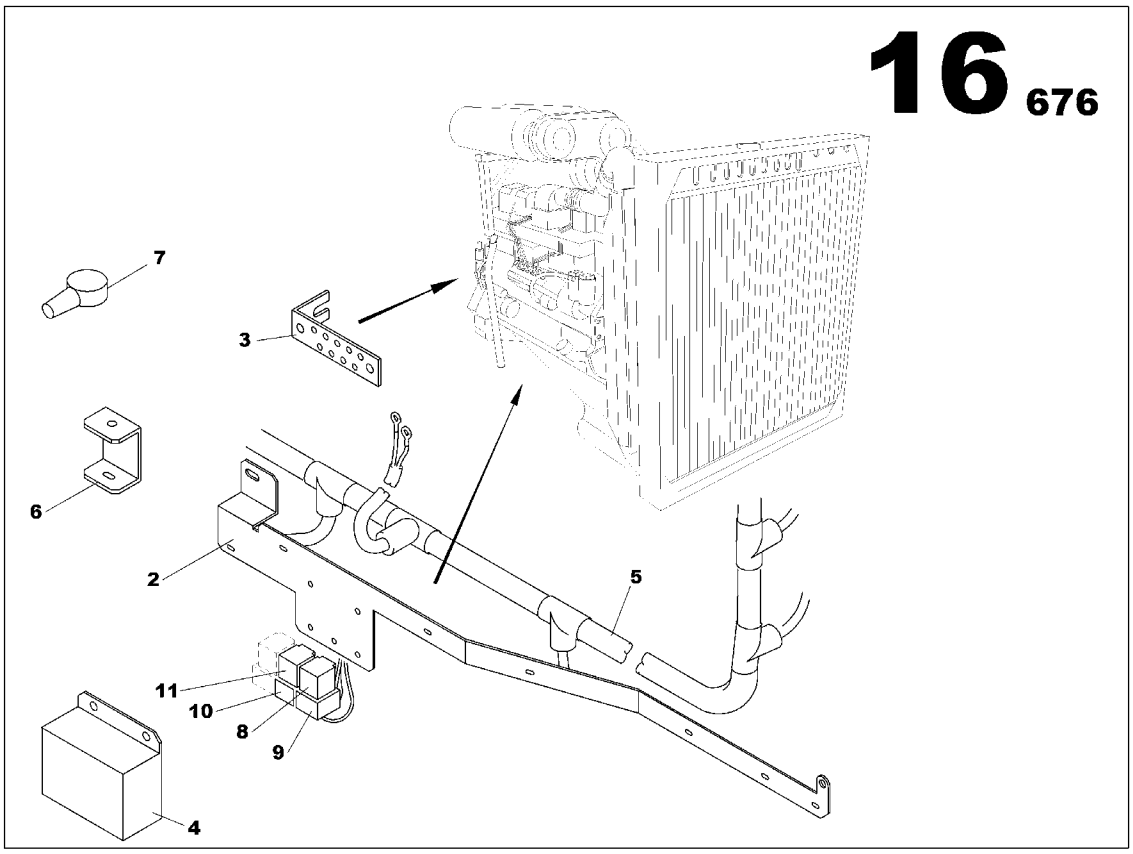

ENGINE WIRING FUNCTION

Part numbers listed are only parts used in this model

Item	Part No.	Description	Qty	Un	From SN	To SN	Order PN	Page
1	17140278	ENGINE WIRING LOOM VO10L	1	UN			17140278	33
2	85638971	INTELLISYS 010 WIRING LOOM ASSEMBLY JD 6081	1	UN			85638971	35
3	85635712	ELECTRIC SHAFT ASSEMBLY	1	UN			85635712	39

ENGINE WIRING LOOM VO10L

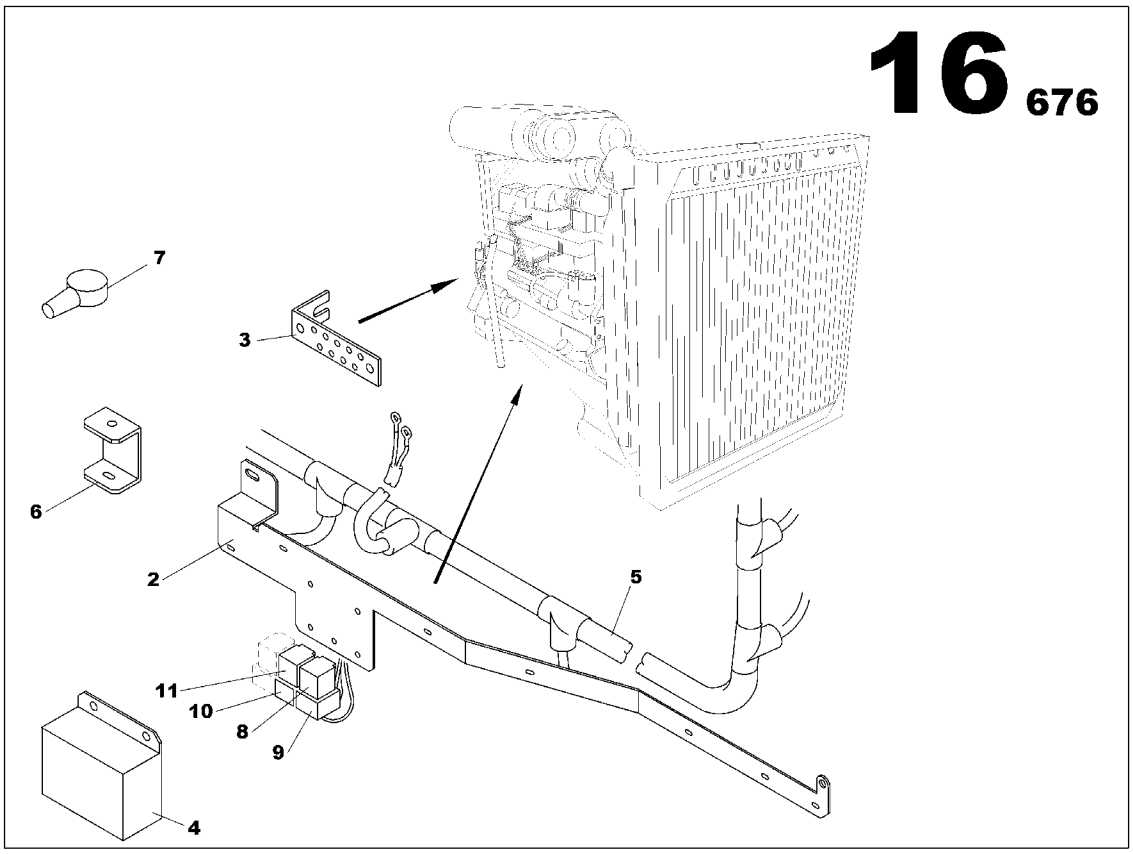

ENGINE WIRING LOOM VO10L
17140278

Part numbers listed are only parts used in this model

Item	Part No.	Description	Qty	Un	From SN	To SN	Order PN	Page
1	85423788	CONNECTOR BRACKET	1	UN			85423788	
2	85499309	WIRING BRACKET VO TAD1030G	1	UN			85499309	
3	85408078	COPPER BAR 5x25	1	UN			85408078	
4	85428100	STARTING RELAY PROTECTION PANEL	1	UN			85428100	
5	17140252	ENGINE WIRING LOOM VOLVO 10L	1	UN			17140252	
6	17140286	FIXING PLATE	1	UN			17140286	
7	85623833	COWL	1	UN			85623833	
8	85423366	RELAY 24V 10/20A	1	UN			85423366	
9	85413292	AUTOMOBILE RELAY BASE	1	UN			85413292	
10	85408912	AUTOMOBILE RELAY BASE	1	UN			85408912	
11	85423374	RELAY	1	UN			85423374	

INTELLISYS 010 WIRING LOOM ASSEMBLY JD 6081

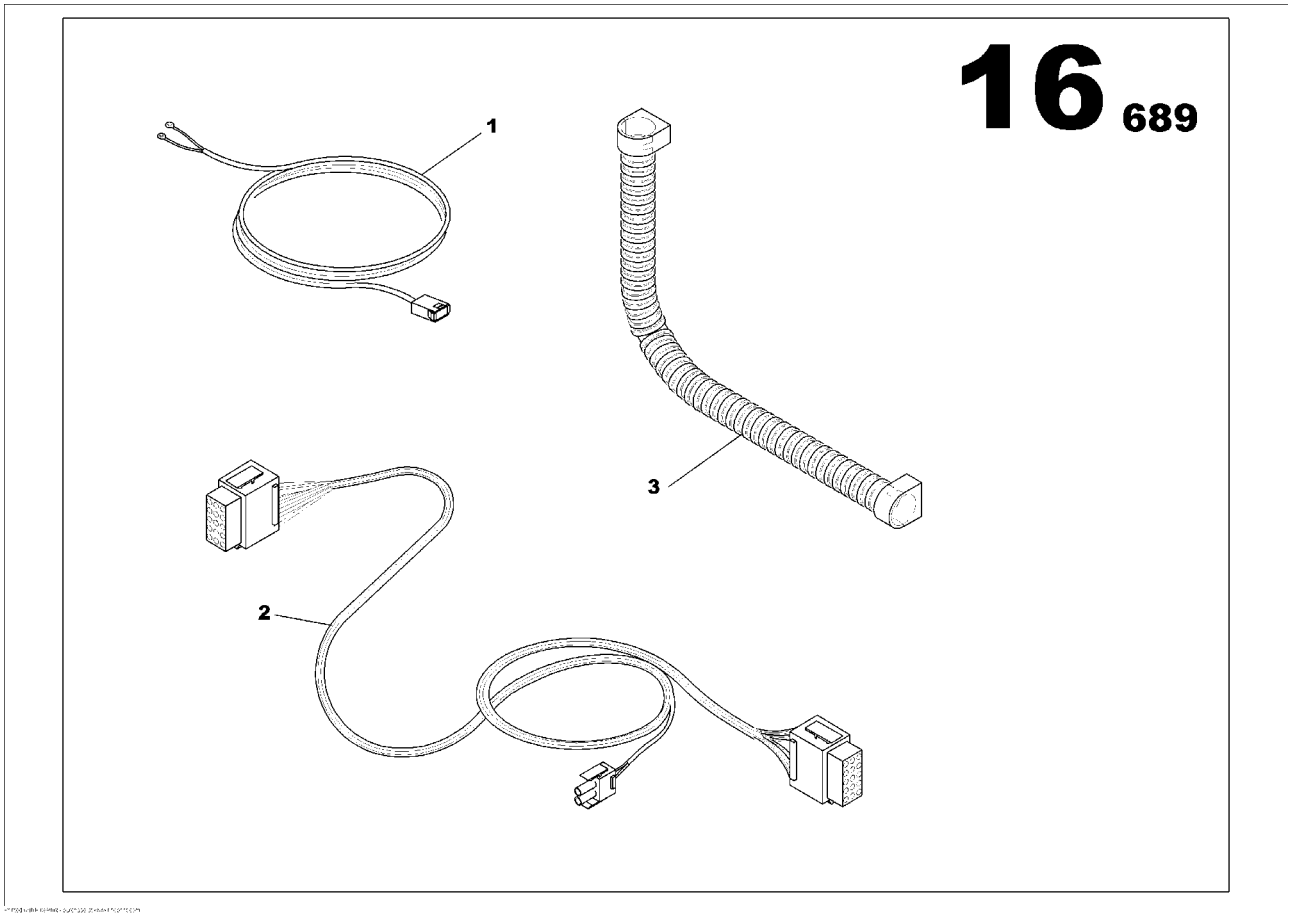

INTELLISYS 010 WIRING LOOM ASSEMBLY JD 6081
85638971

Part numbers listed are only parts used in this model

Item	Part No.	Description	Qty	Un	From SN	To SN	Order PN	Page
1	85638690	INTELLISYS WIRING LOOM 010-BAT	1	UN			85638690	
2	85635704	INTELLISYS 010 WIRING LOOM ASSEMBLY JD 6081	1	UN	032004983		85635704	37

INTELLISYS 010 WIRING LOOM ASSEMBLY JD 6081

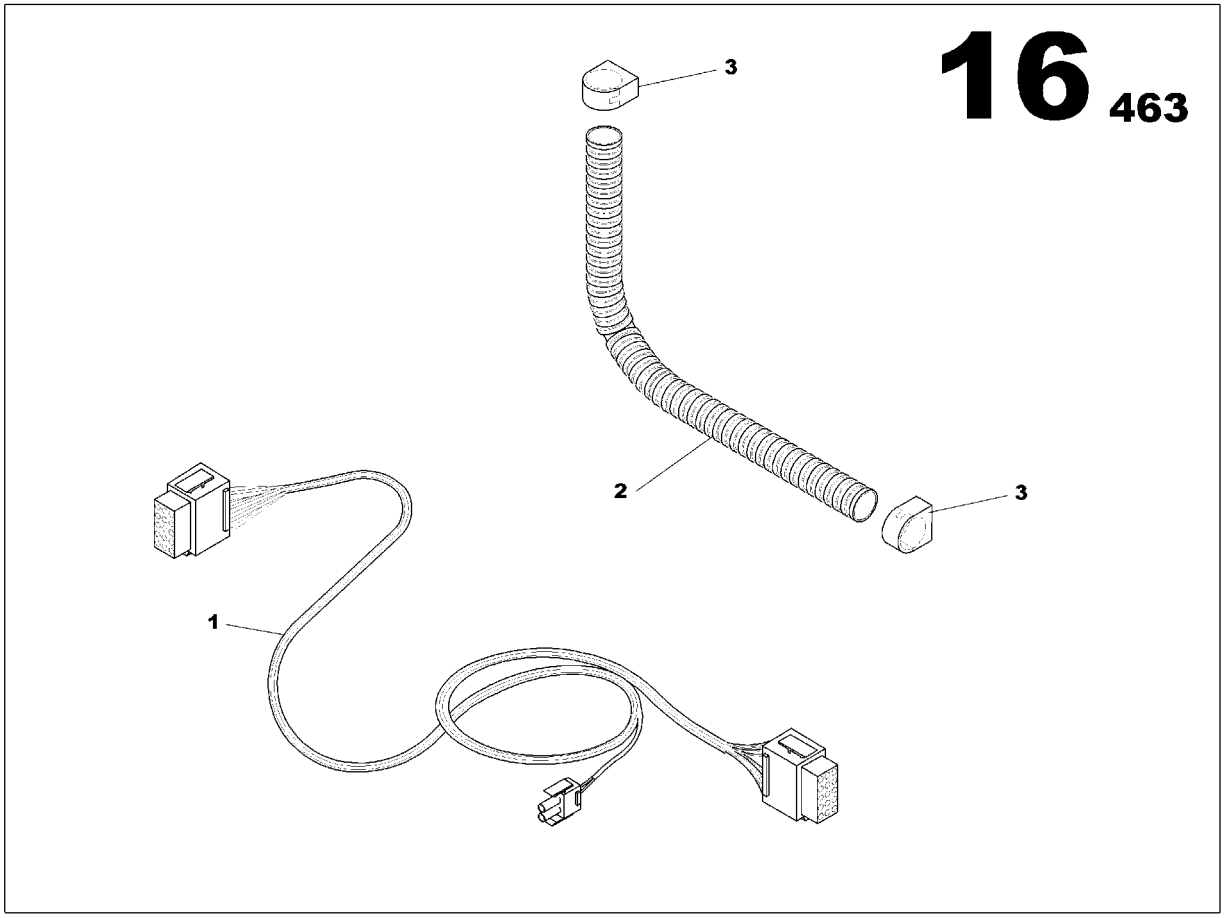

INTELLISYS 010 WIRING LOOM ASSEMBLY JD 6081
85635704

Part numbers listed are only parts used in this model

Item	Part No.	Description	Qty	Un	From SN	To SN	Order PN	Page
1	85635217	INTELLISYS WIRING LOOM 010	1	UN			85635217	
2	85427268	ELECTRICAL SHAFT D29	1.7	ML			85427268	
3	85427276	CLIP D29	2	UN			85427276	

ELECTRIC SHAFT ASSEMBLY

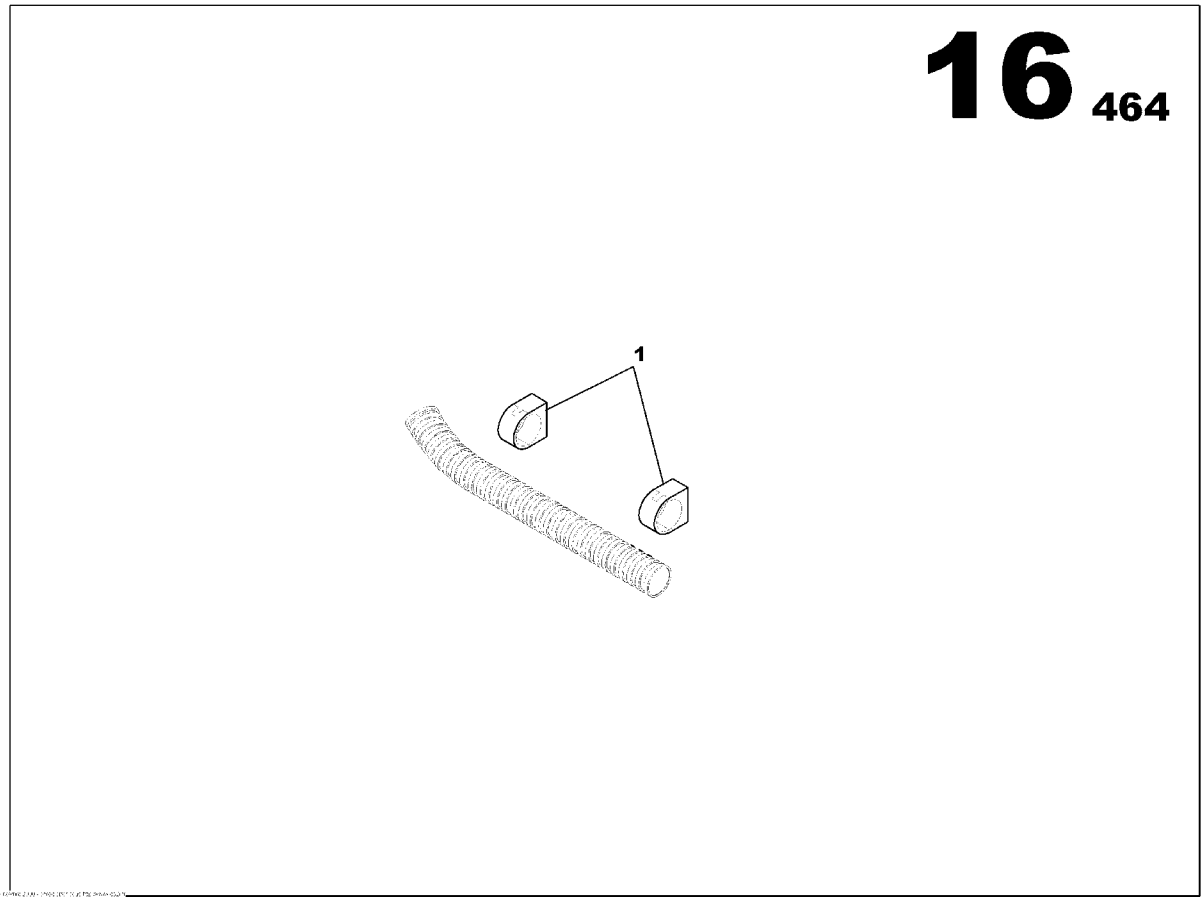

ELECTRIC SHAFT ASSEMBLY
85635712

Part numbers listed are only parts used in this model

Item	Part No.	Description	Qty	Un	From SN	To SN	Order PN	Page
1	85427029	CLIP D29	2	UN			85427029	

ALTERNATOR FUNCTION

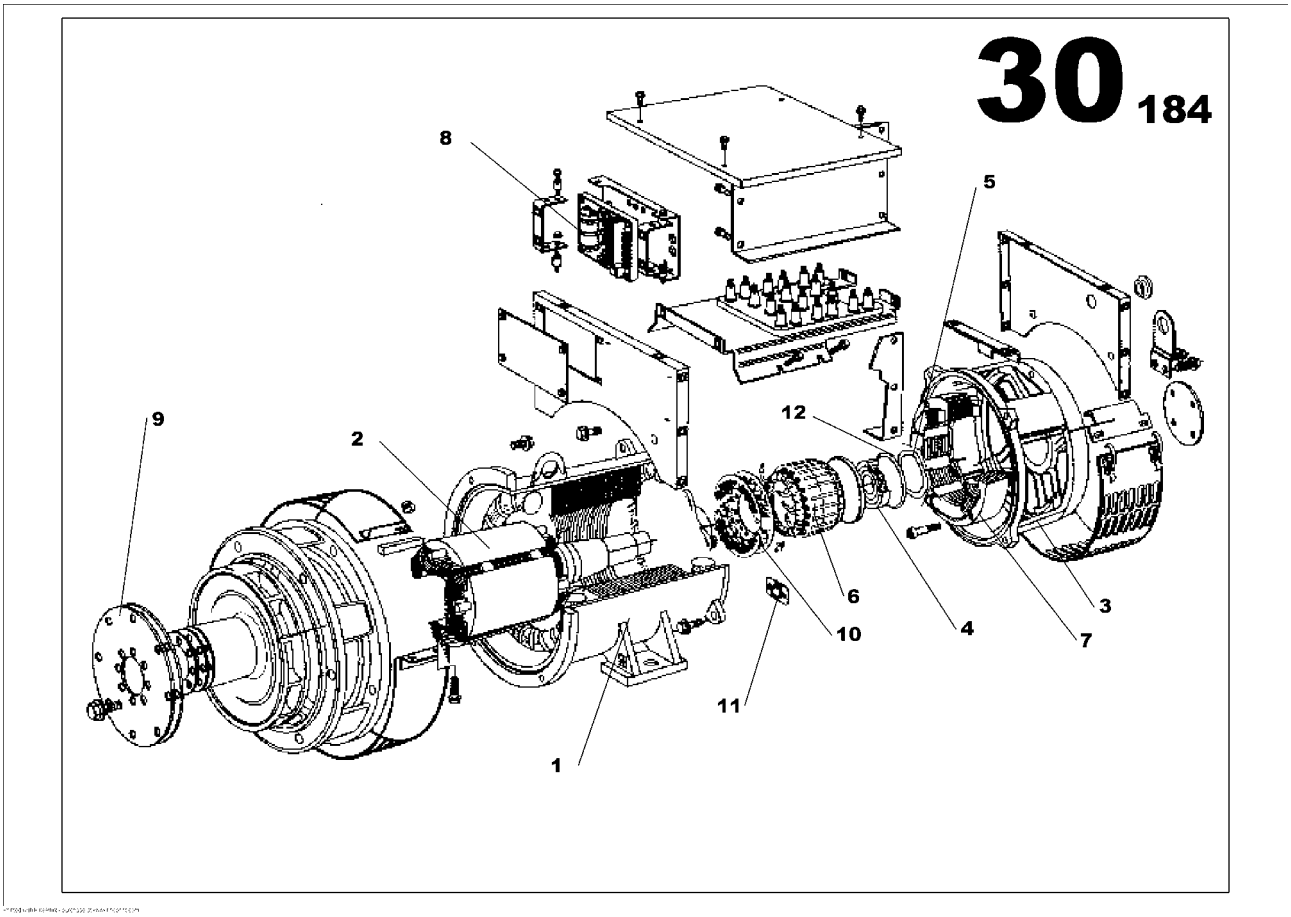

ALTERNATOR FUNCTION

Part numbers listed are only parts used in this model

Item	Part No.	Description	Qty	Un	From SN	To SN	Order PN	Page
1	85638591	OUTPUT CABLES ALTERNATOR ASSEMBLY	1	UN			85638591	43
2		ALTERNATOR	1	UN				51

OUTPUT CABLES ALTERNATOR ASSEMBLY

OUTPUT CABLES ALTERNATOR ASSEMBLY
85638591

Part numbers listed are only parts used in this model

Item	Part No.	Description	Qty	Un	From SN	To SN	Order PN	Page
1	85638583	OUTPUT CABLES ALTERNATOR ASSEMBLY	1	UN			85638583	45

OUTPUT CABLES ALTERNATOR ASSEMBLY

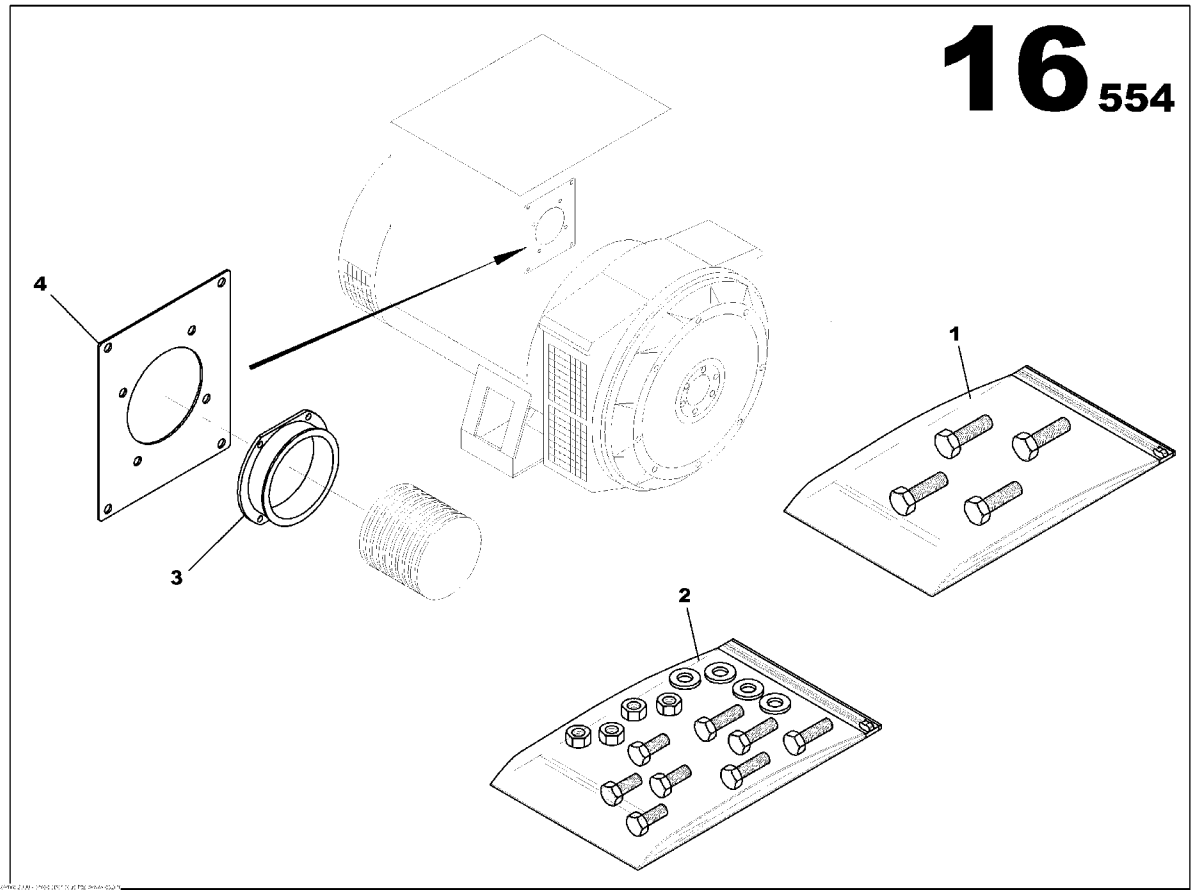

OUTPUT CABLES ALTERNATOR ASSEMBLY
85638583

Part numbers listed are only parts used in this model

Item	Part No.	Description	Qty	Un	From SN	To SN	Order PN	Page
1	85639383	SCREWS ASSEMBLY	1	UN			85639383	47
2	85639417	SCREWS ASSEMBLY	1	UN			85639417	49
3	85499754	PIPE UNION PG70	1	UN			85499754	
4	85638534	PLATEN PANEL ALTERNATOR OPTION	1	UN			85638534	

SCREWS ASSEMBLY

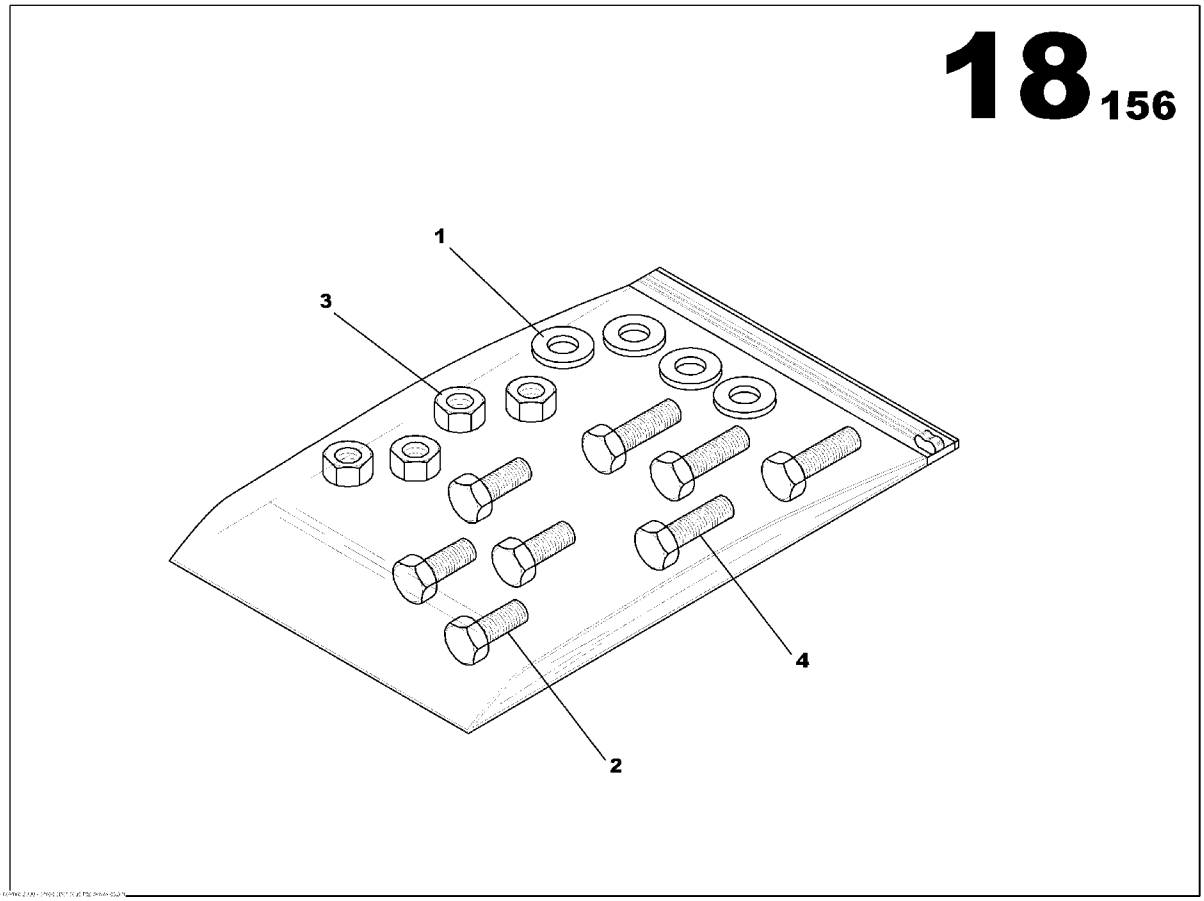

SCREWS ASSEMBLY
85639383

Part numbers listed are only parts used in this model

Item	Part No.	Description	Qty	Un	From SN	To SN	Order PN	Page
1	85636736	WASHER 6x12	4	UN			85636736	
2	85639318	SCREW H M6x16	4	UN	02010754		85639318	
3	85507911	NUT M6	4	UN			85507911	

SCREWS ASSEMBLY

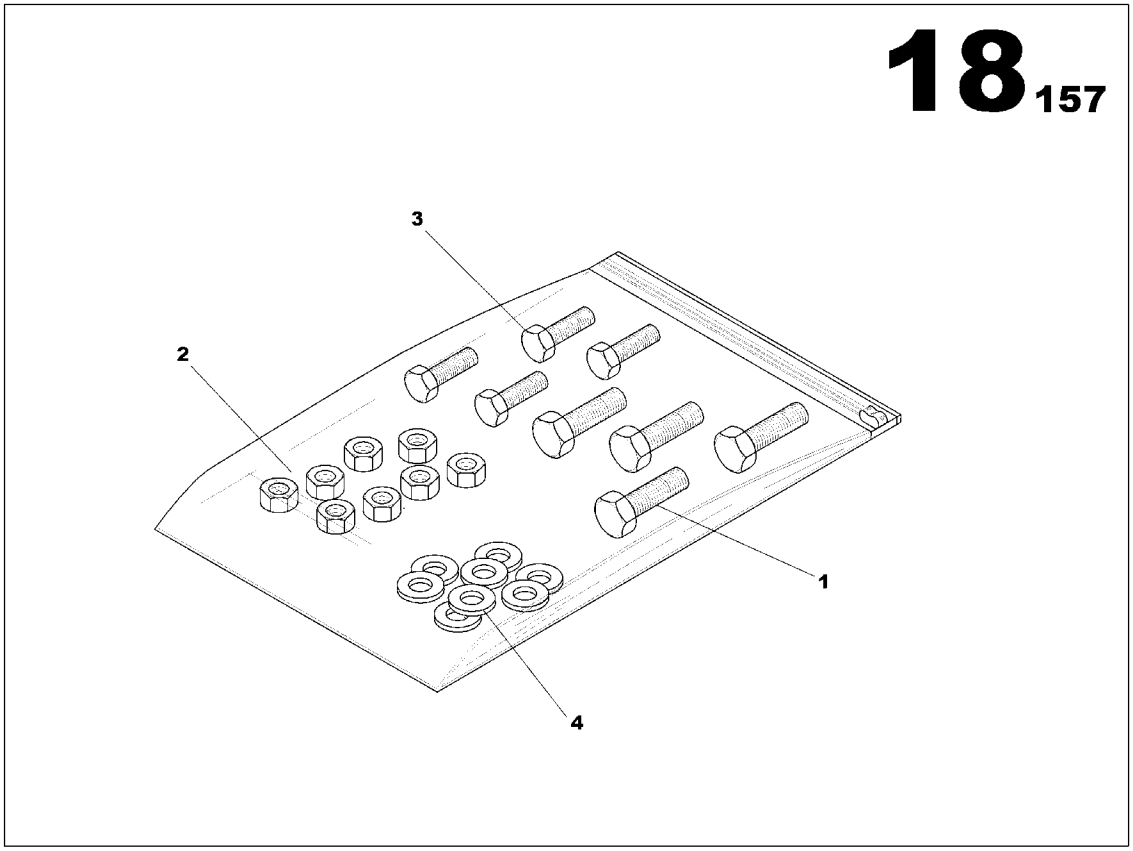

SCREWS ASSEMBLY
85639417

Part numbers listed are only parts used in this model

Item	Part No.	Description	Qty	Un	From SN	To SN	Order PN	Page
1	85636389	SCREW H M6x16	4	UN			85636389	
2	85429553	NUT M4	4	UN			85429553	
3	85636363	SCREW HS M4x16	4	UN			85636363	
4	85636728	WASHER 4x10	8	UN			85636728	

ALTERNATOR

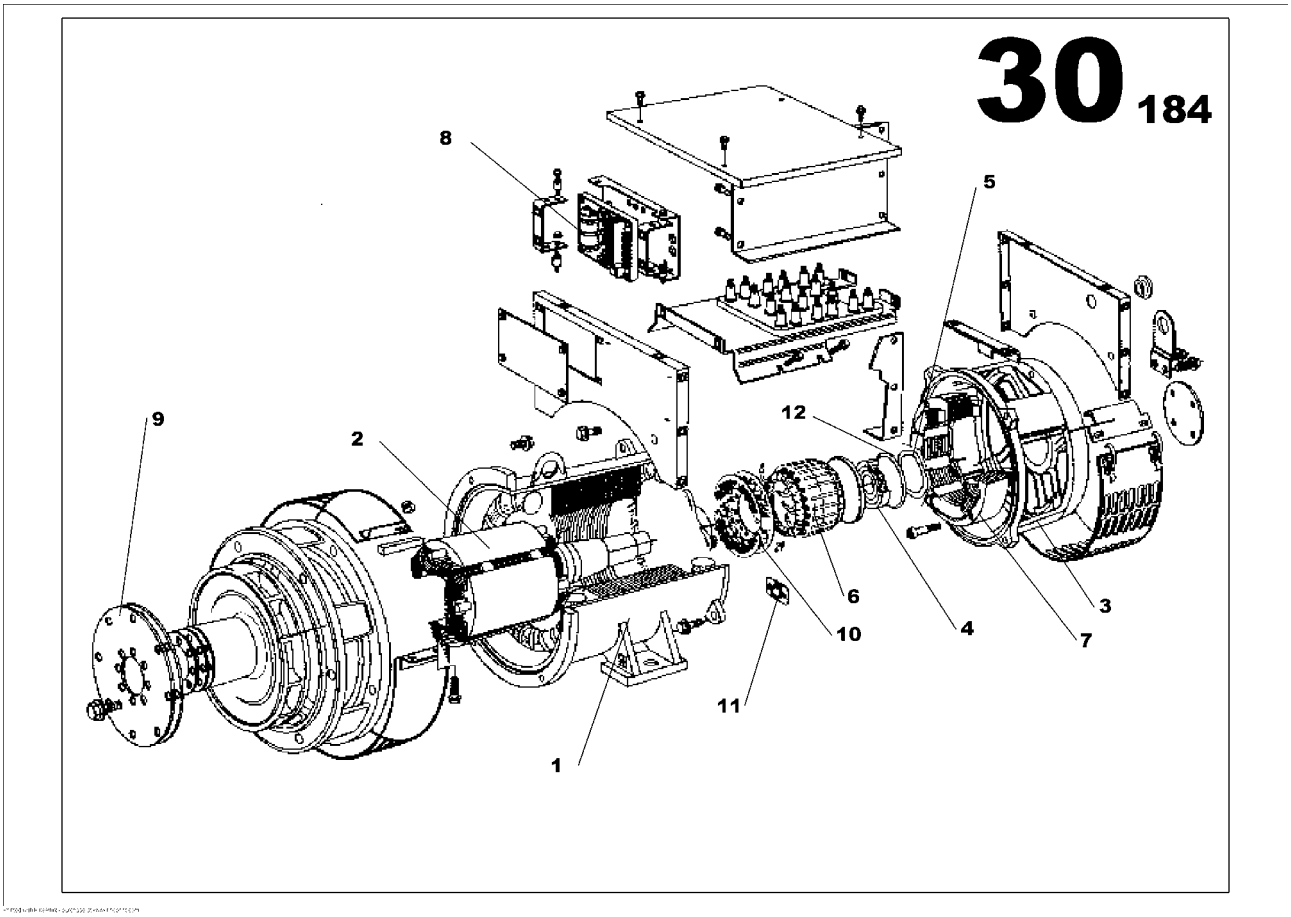

ALTERNATOR

Part numbers listed are only parts used in this model

Item	Part No.	Description	Qty	Un	From SN	To SN	Order PN	Page
1	85416659	ALTERNATOR LS 462VL	1	UN			85416659	53

ALTERNATOR LS 462VL

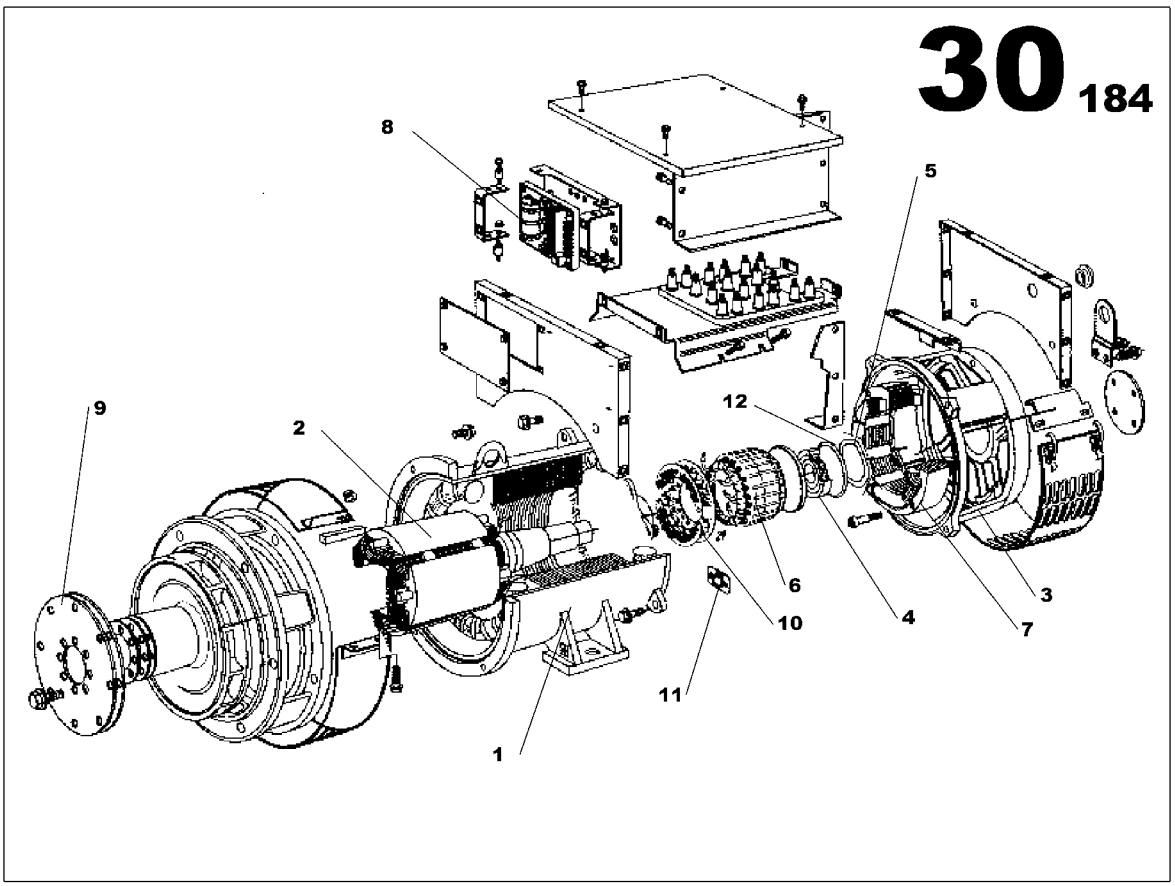

ALTERNATOR LS 462VL
85416659

Part numbers listed are only parts used in this model

Item	Part No.	Description	Qty	Un	From SN	To SN	Order PN	Page
1	85508828	WOUND STATOR ASSEMBLY *Alternator S/N needed to supply this part-*	1	UN			85508828	
2	85509123	WOUND ROTOR ASSEMBLY *Alternator S/N needed to supply this part-*	1	UN			85509123	
3	85508877	N.D.E BRACKET	1	UN			85508877	
4	85425916	BALL BEARING	1	UN			85425916	
5	85509065	WAVY WASHER	1	UN			85509065	
6	85508919	WOUND EXCITER FIELD	1	UN			85508919	
7	85508976	WOUND EXCITER ARMATURE	1	UN			85508976	
8	85425577	GOVERNOR	1	UN			85425577	
9	85425957	COUPLING DISC LSA 471 and 462L6/VL12	1	UN			85425957	
10	85426179	DIODE BRIDGE	1	UN			85426179	
11	85402444	SURGE SUPPRESSOR	1	UN			85402444	
12	85509016	O RING	1	UN			85509016	

COOLER FUNCTION

Non illustré
Not illustrated

COOLER FUNCTION

Part numbers listed are only parts used in this model

Item	Part No.	Description	Qty	Un	From SN	To SN	Order PN	Page
1	17137043	RADIATOR FITTINGS ASSEMBLY	1	UN			17137043	57

RADIATOR FITTINGS ASSEMBLY

Non illustré
Not illustrated

RADIATOR FITTINGS ASSEMBLY
17137043

Part numbers listed are only parts used in this model

Item	Part No.	Description	Qty	Un	From SN	To SN	Order PN	Page
1	17137035	RADIATOR VO TAD 10L ASSEMBLY	1	UN			17137035	59

RADIATOR VO TAD 10L ASSEMBLY

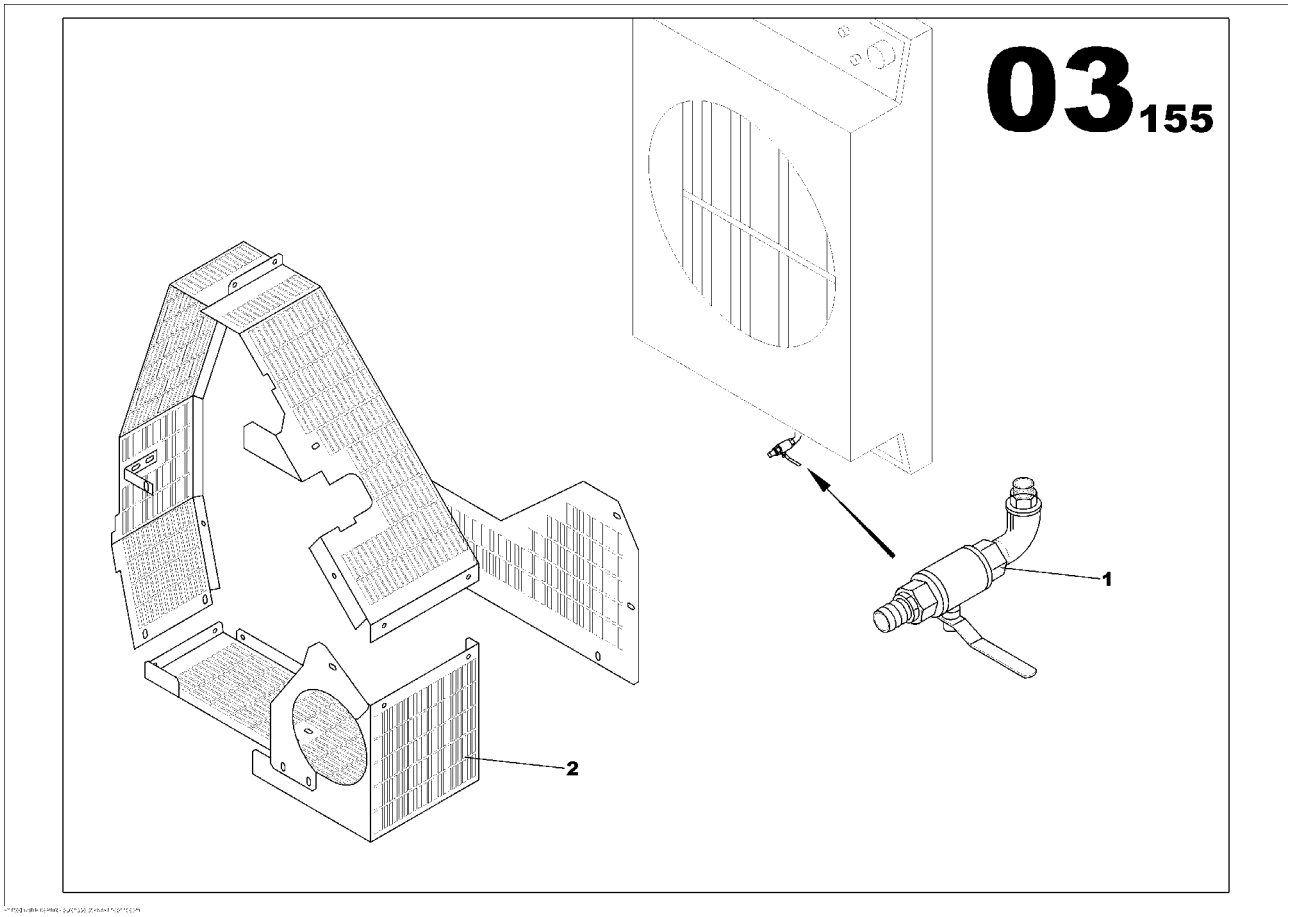

RADIATOR VO TAD 10L ASSEMBLY
17137035

Part numbers listed are only parts used in this model

Item	Part No.	Description	Qty	Un	From SN	To SN	Order PN	Page
1	85421113	VOLVO RADIATOR DRAIN ASSEMBLY	1	UN			85421113	61
2	17138215	PULLEY GUARDS ASSEMBLY	1	UN			17138215	63

VOLVO RADIATOR DRAIN ASSEMBLY

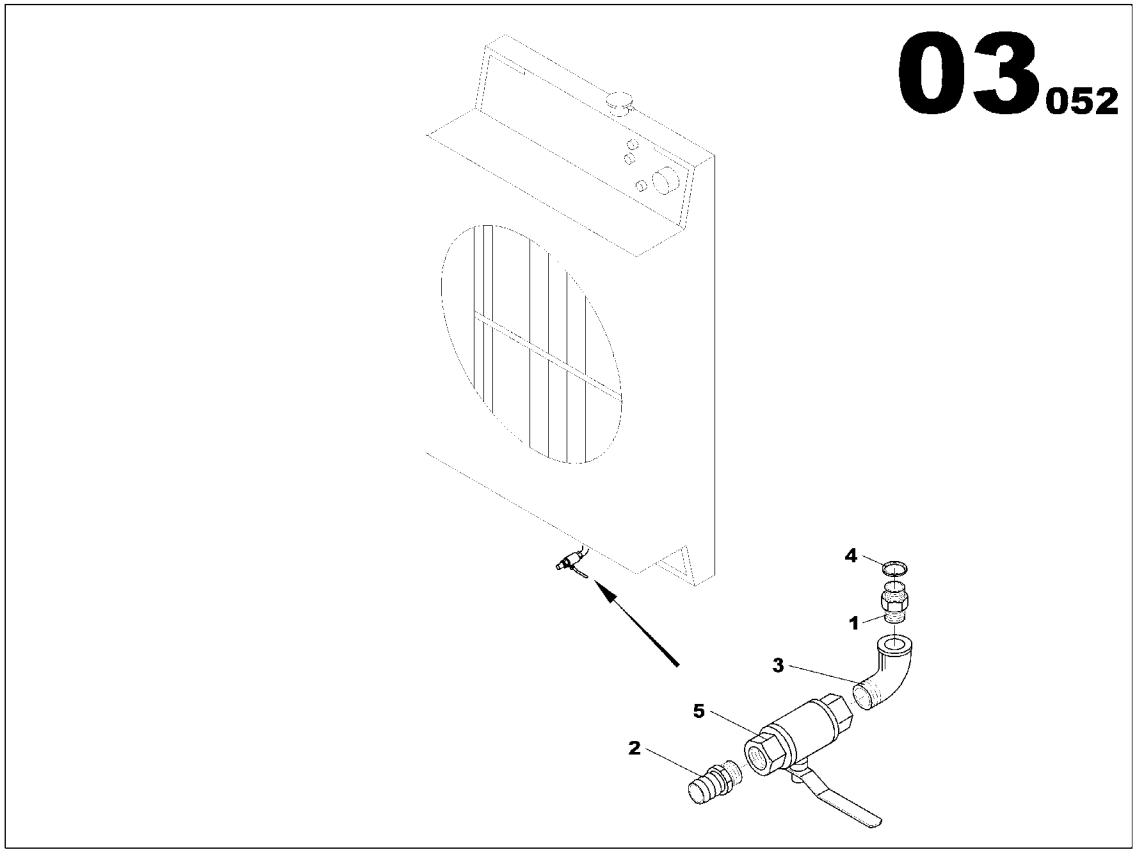

VOLVO RADIATOR DRAIN ASSEMBLY
85421113

Part numbers listed are only parts used in this model

Item	Part No.	Description	Qty	Un	From SN	To SN	Order PN	Page
1	85415701	PIPE UNION REDUCER MAL/MAL M14x150 3/8G	1	UN			85415701	
2	85409258	PIPE UNION MAL/MAL 3/8G	1	UN			85409258	
3	85409308	PIPE UNION ELBOW 90° MAL/FEM 3/8G	1	UN			85409308	
4	85410298	GASKET D14x18	1	UN			85410298	
5	85416451	2 WAYS VALVE	1	UN			85416451	

PULLEY GUARDS ASSEMBLY

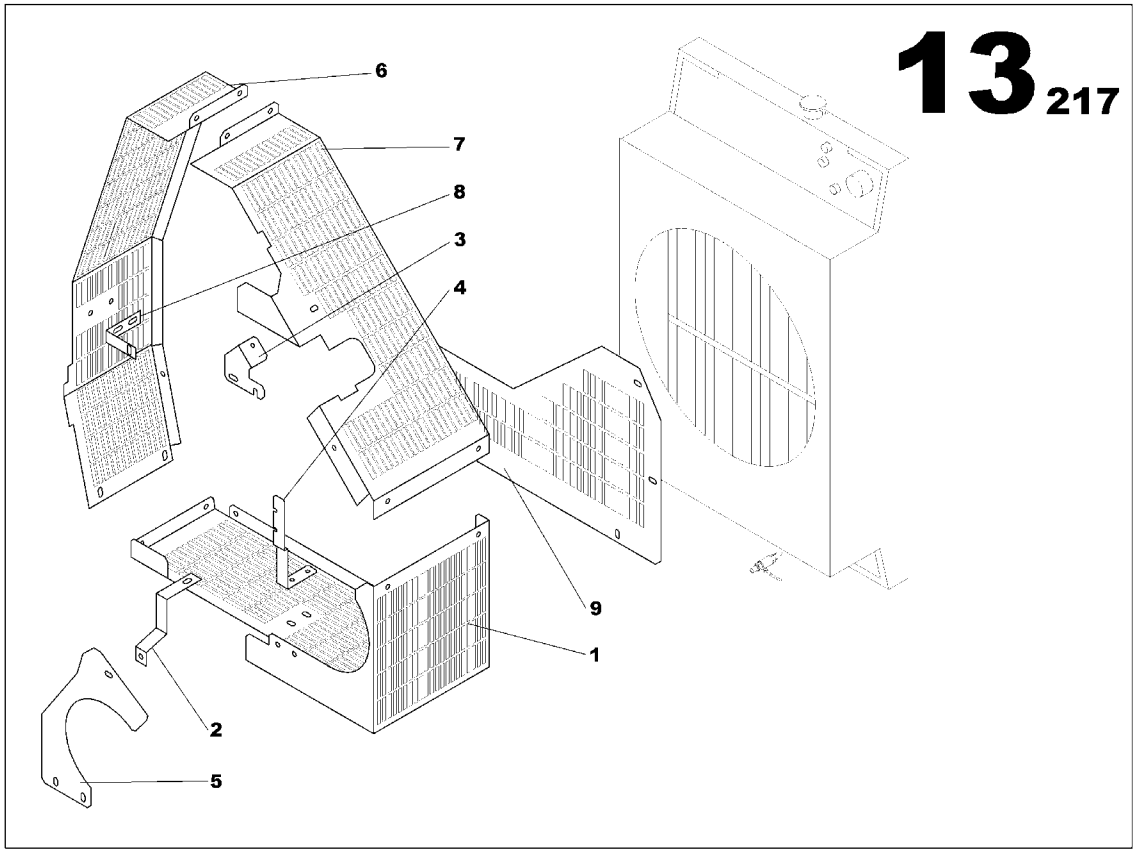

PULLEY GUARDS ASSEMBLY
17138215

Part numbers listed are only parts used in this model

Item	Part No.	Description	Qty	Un	From SN	To SN	Order PN	Page
1	85497238	RADIATOR FAN GUARD FRONT VO TAD1030	1	UN			85497238	
2	85497253	FAN BELT GUARD BRACKET VO TAD10L	1	UN			85497253	
3	85497261	FAN BELT GUARD BRACKET VO TAD10L	1	UN			85497261	
4	85497279	FAN BELT GUARD BRACKET VO TAD10L	1	UN			85497279	
5	85497295	RADIATOR FAN GUARD FRONT VO TAD1030	1	UN			85497295	
6	85623320	RADIATOR FAN GUARD FRONT VO TAD1032	1	UN			85623320	
7	85623338	RADIATOR FAN GUARD FRONT VO TAD1032	1	UN			85623338	
8	85623346	FAN BELT GUARD BRACKET VO TAD10L	1	UN			85623346	
9	85623353	RADIATOR FAN GUARD FRONT VO TAD1032	1	UN			85623353	

FUEL FUNCTION

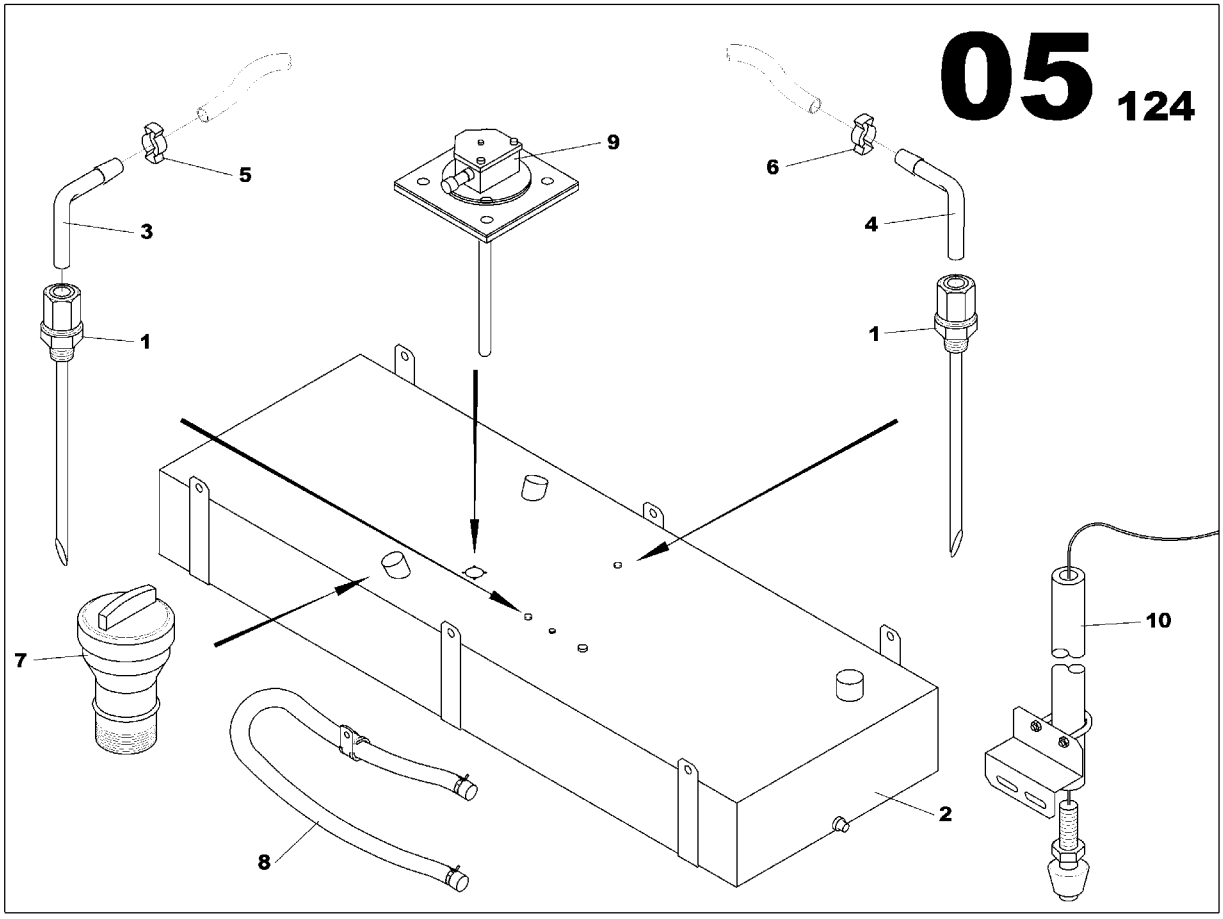

FUEL FUNCTION

Part numbers listed are only parts used in this model

Item	Part No.	Description	Qty	Un	From SN	To SN	Order PN	Page
1	17137266	FUEL PREFILTER KIT ASSEMBLY	1	UN			17137266	67
2	17137431	FUEL TANK ASSEMBLY	1	UN			17137431	73

FUEL PREFILTER KIT ASSEMBLY

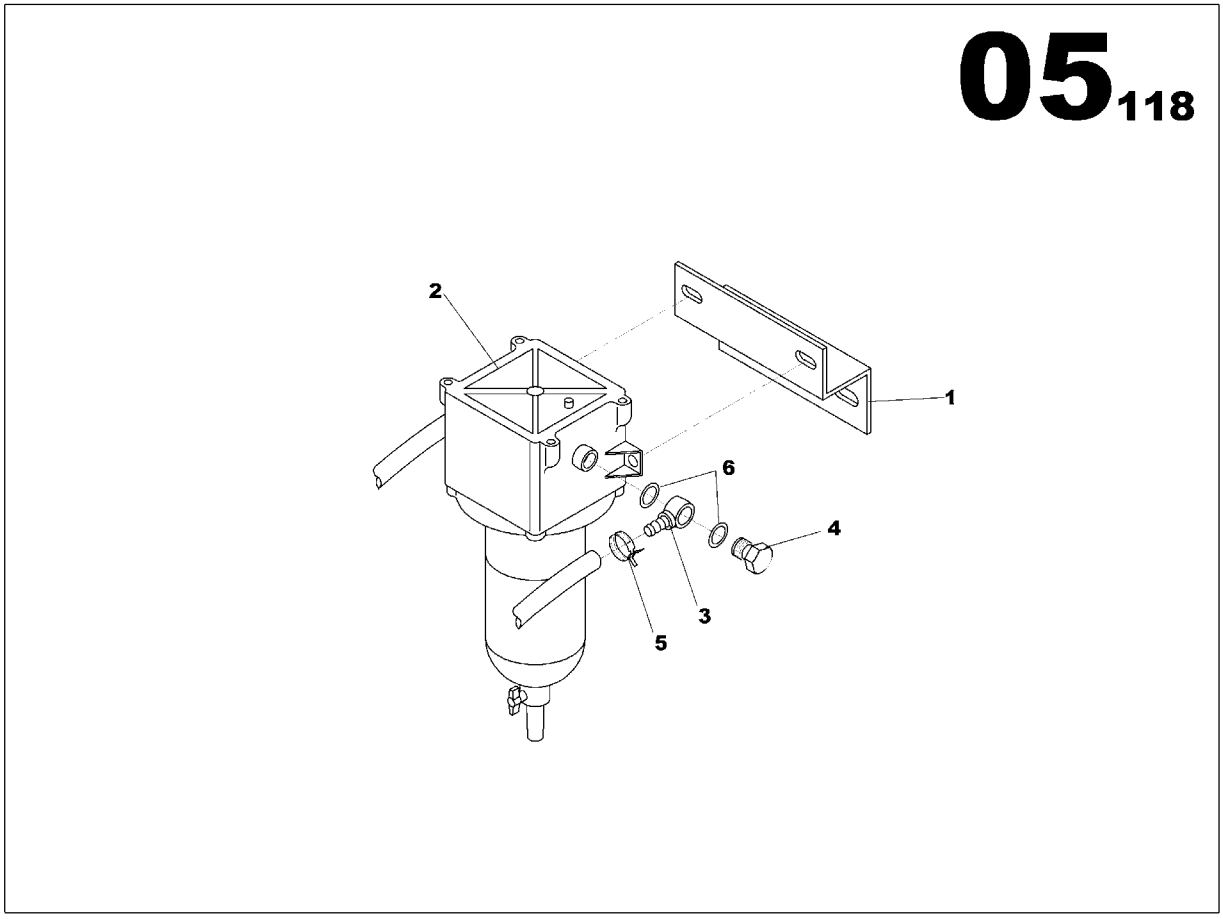

FUEL PREFILTER KIT ASSEMBLY
17137266

Part numbers listed are only parts used in this model

Item	Part No.	Description	Qty	Un	From SN	To SN	Order PN	Page
1	17137258	FUEL PREFILTER KIT ASSEMBLY	1	UN			17137258	69

FUEL PREFILTER KIT ASSEMBLY

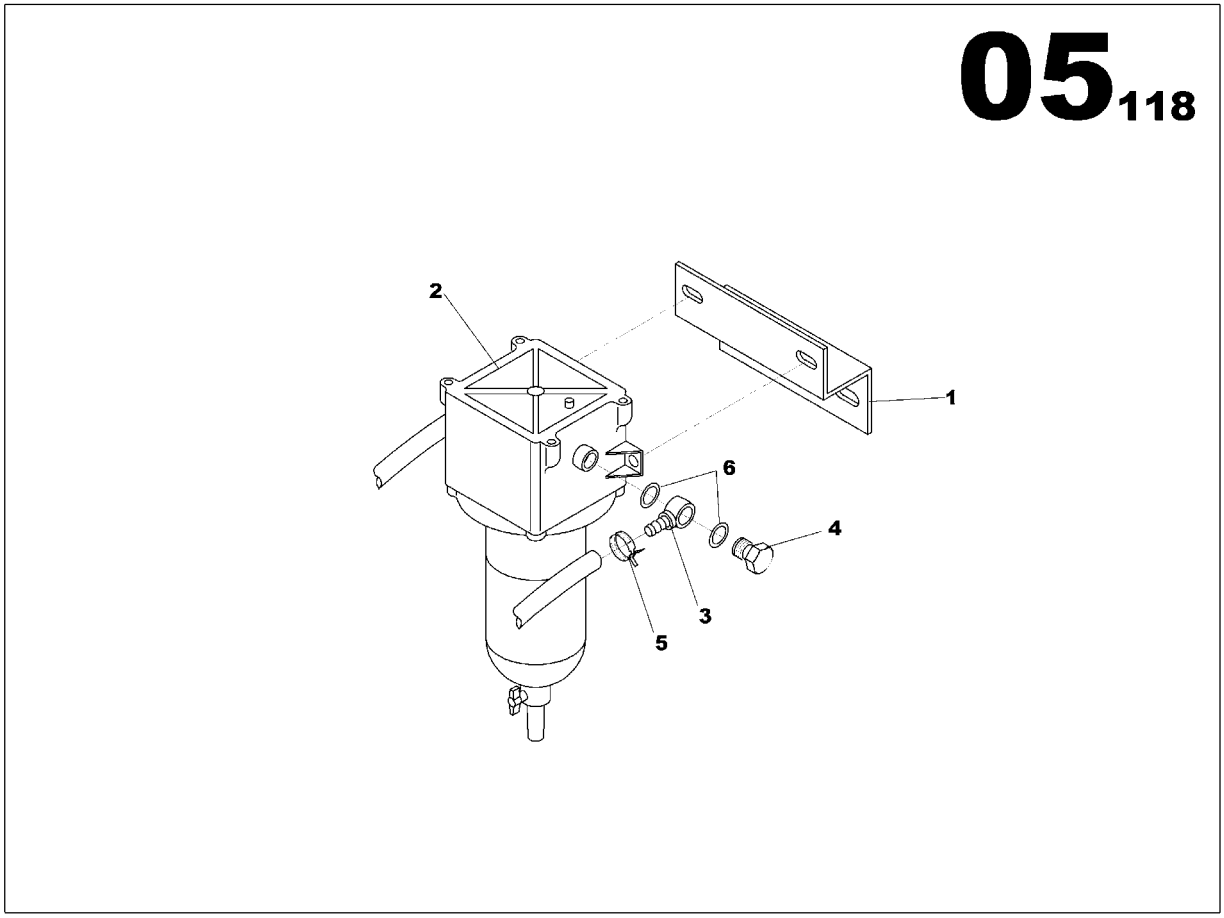

FUEL PREFILTER KIT ASSEMBLY
17137258

Part numbers listed are only parts used in this model

Item	Part No.	Description	Qty	Un	From SN	To SN	Order PN	Page
1	17137191	FUEL FILTER BRACKET	1	UN			17137191	
2	85421451	DECANTATION CARTRIDGE FILTER	1	UN			85421451	71
3	85507937	BANJO CONNECTOR MALE D10	2	UN			85507937	
4	85507945	BANJO SCREW M16X150 L28	2	UN			85507945	
5	85509727	SPRING CLAMP D17/19	2	UN			85509727	
6	85507952	GASKET D16x22	4	UN			85507952	

DECANTATION CARTRIDGE FILTER

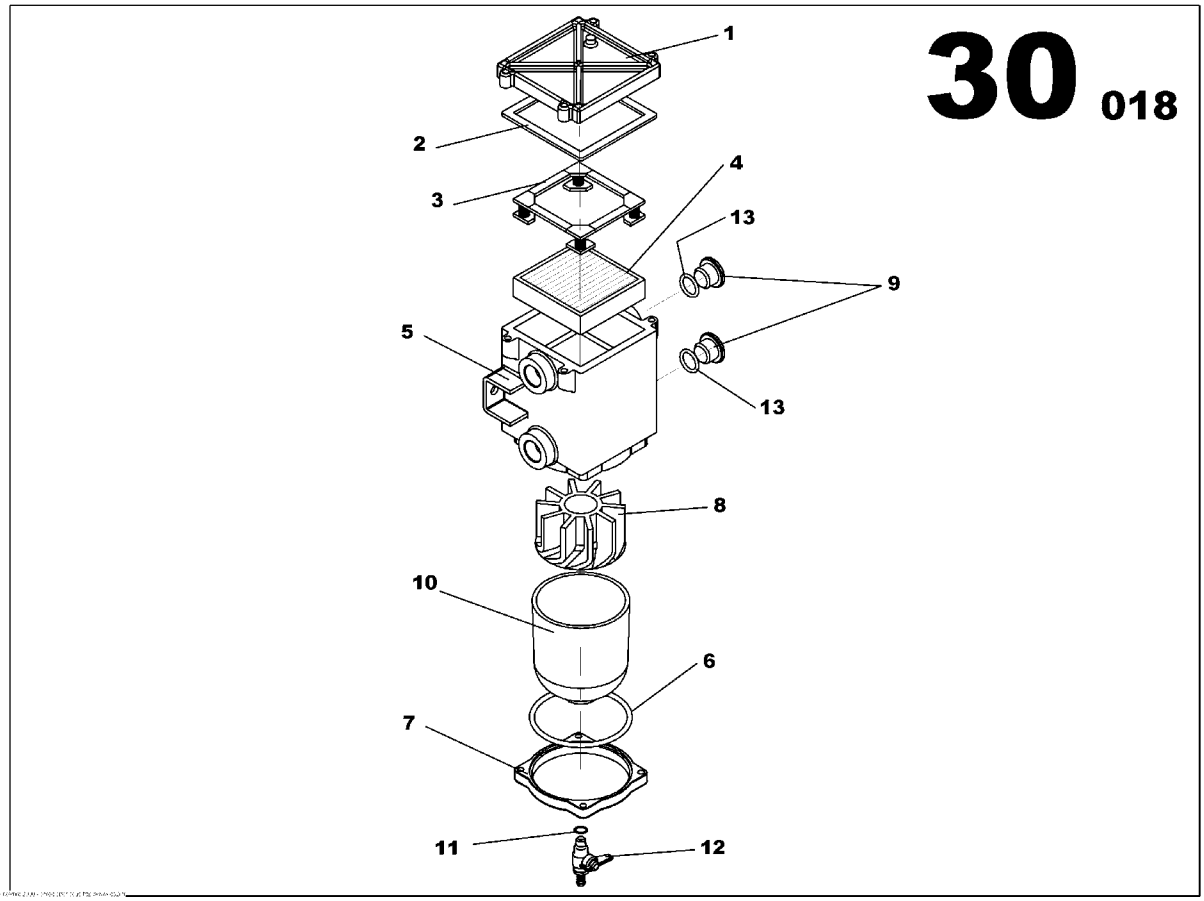

DECANTATION CARTRIDGE FILTER
85421451

Part numbers listed are only parts used in this model

Item	Part No.	Description	Qty	Un	From SN	To SN	Order PN	Page
1	85502557	COVER	1	UN			85502557	
2	85502581	SEPARATOR FILTER LID GASKET	1	UN			85502581	
3	85502599	SEPARATOR FILTER SPRING CASSETTE	1	UN			85502599	
4	85401644	SEPARATOR FILTER CARTRIDGE	1	UN			85401644	
5	85502946	SEPARATOR FILTER HOUSING	1	UN			85502946	
6	85502953	SEPARATOR FILTER BOWL GASKET	1	UN			85502953	
7	85502961	SEPARATOR FILTER BOWL RETAINER RING	1	UN			85502961	
8	85502979	SEPARATOR FILTER CENTRIFUGE	1	UN			85502979	
9	85502987	PLUG	2	UN			85502987	
10	85502995	SEPARATOR FILTER BOWL	1	UN			85502995	
11	85503001	SEPARATOR FILTER O-RING	1	UN			85503001	
12	85503019	SEPARATOR FILTER DRAIN COCK	1	UN			85503019	
13	85425551	GASKET D16x20	2	UN			85425551	

FUEL TANK ASSEMBLY

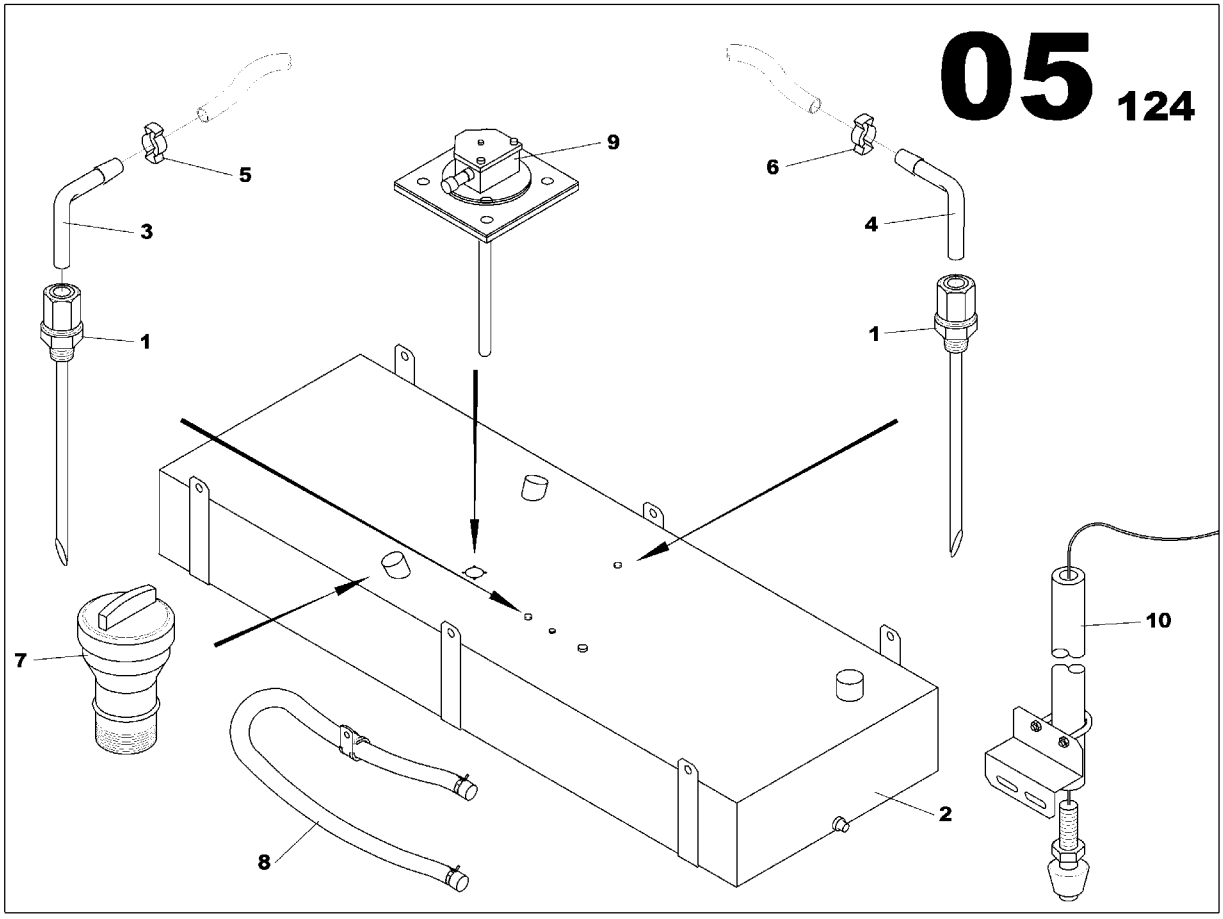

FUEL TANK ASSEMBLY
17137431

Part numbers listed are only parts used in this model

Item	Part No.	Description	Qty	Un	From SN	To SN	Order PN	Page
1	17137423	FUEL TANK ASSEMBLY	1	UN			17137423	75

FUEL TANK ASSEMBLY

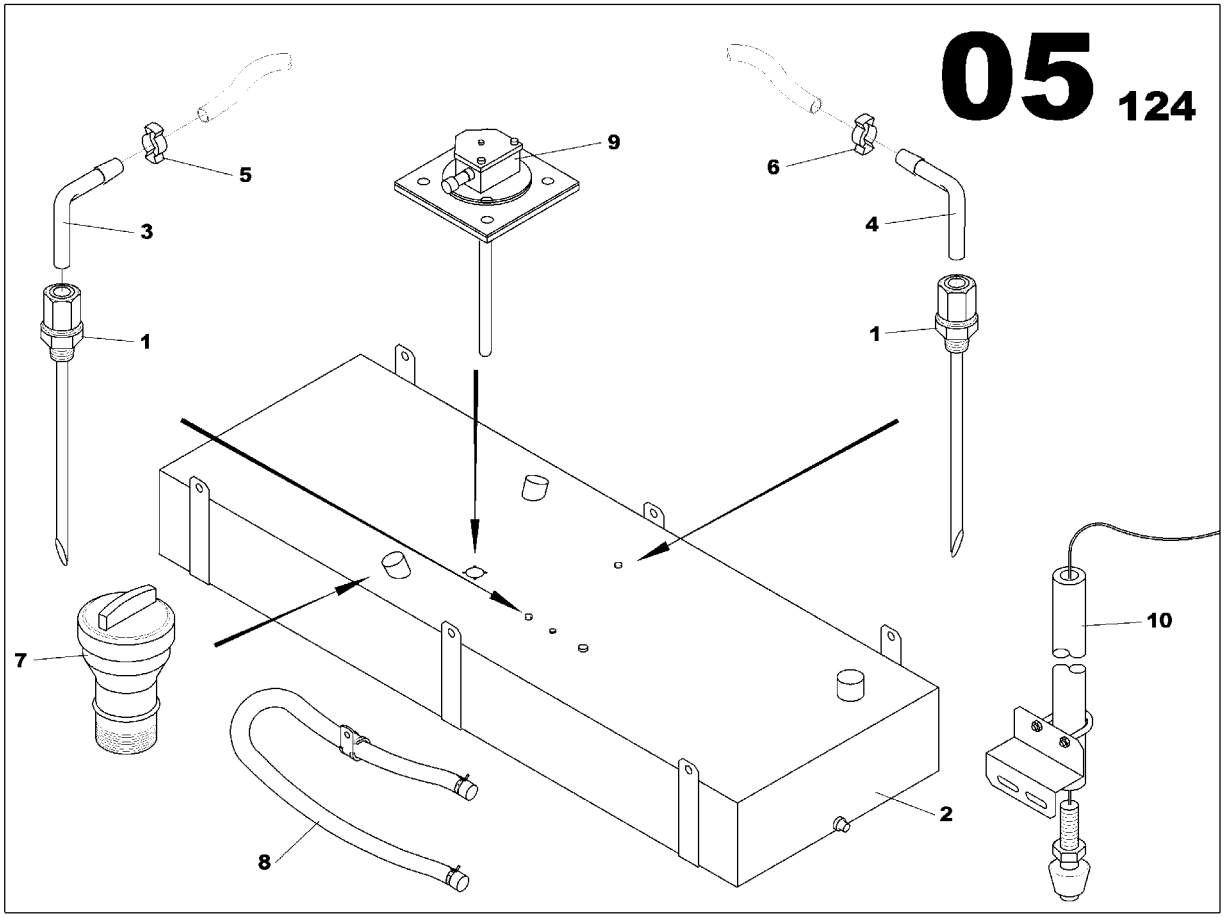

FUEL TANK ASSEMBLY
17137423

Part numbers listed are only parts used in this model

Item	Part No.	Description	Qty	Un	From SN	To SN	Order PN	Page
1	17131343	FUEL SUCCION PIPE L470 D10 1/2G	2	UN			17131343	
2	17137324	TANK 1368L	1	UN			17137324	
3	85631729	PIPE UNION ELBOW MAL/FEM D10	1	UN			85631729	
4	85631737	PIPE UNION ELBOW MAL/FEM D12	1	UN			85631737	
5	85509727	SPRING CLAMP D17/19	2	UN			85509727	
6	85631786	SPRING CLAMP D19/21	2	UN			85631786	
7	85629541	FUEL FILLING FUNNEL BASE TANK	1	UN			85629541	77
8	17130196	COMBUSTIBLE VENT TANK ASSEMBLY	1	UN			17130196	79
9	85404580	TRANS. FUEL LEVEL ASSEMBLY	1	UN			85404580	81
10	17138017	LEAKAGE DETECTION RETENTION BUND ASSEMBLY	1	UN			17138017	83

FUEL FILLING FUNNEL BASE TANK

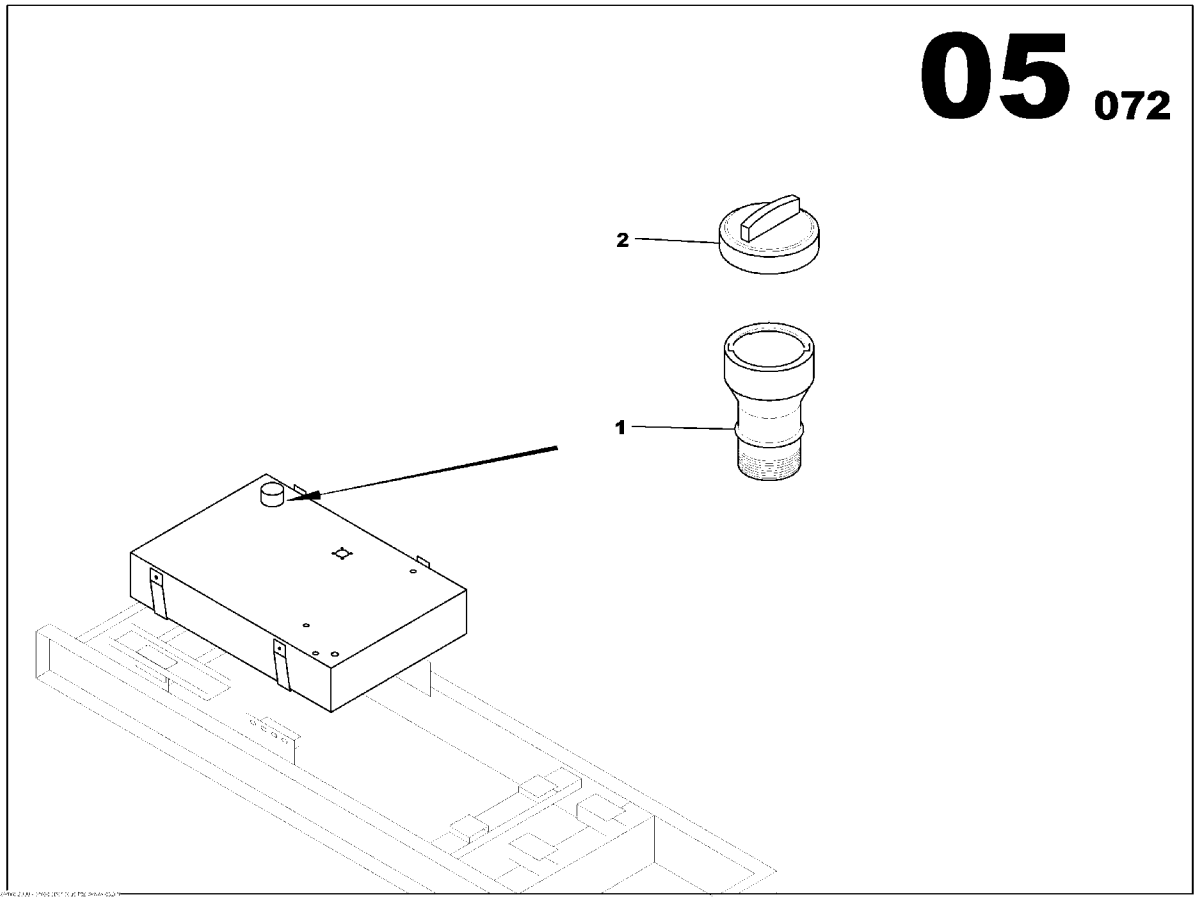

FUEL FILLING FUNNEL BASE TANK
85629541

Part numbers listed are only parts used in this model

Item	Part No.	Description	Qty	Un	From SN	To SN	Order PN	Page
1	85403517	FUEL FILLING FUNNEL BASE TANK	1	UN			85403517	
2	85509222	TANK CAP	1	UN			85509222	

COMBUSTIBLE VENT TANK ASSEMBLY

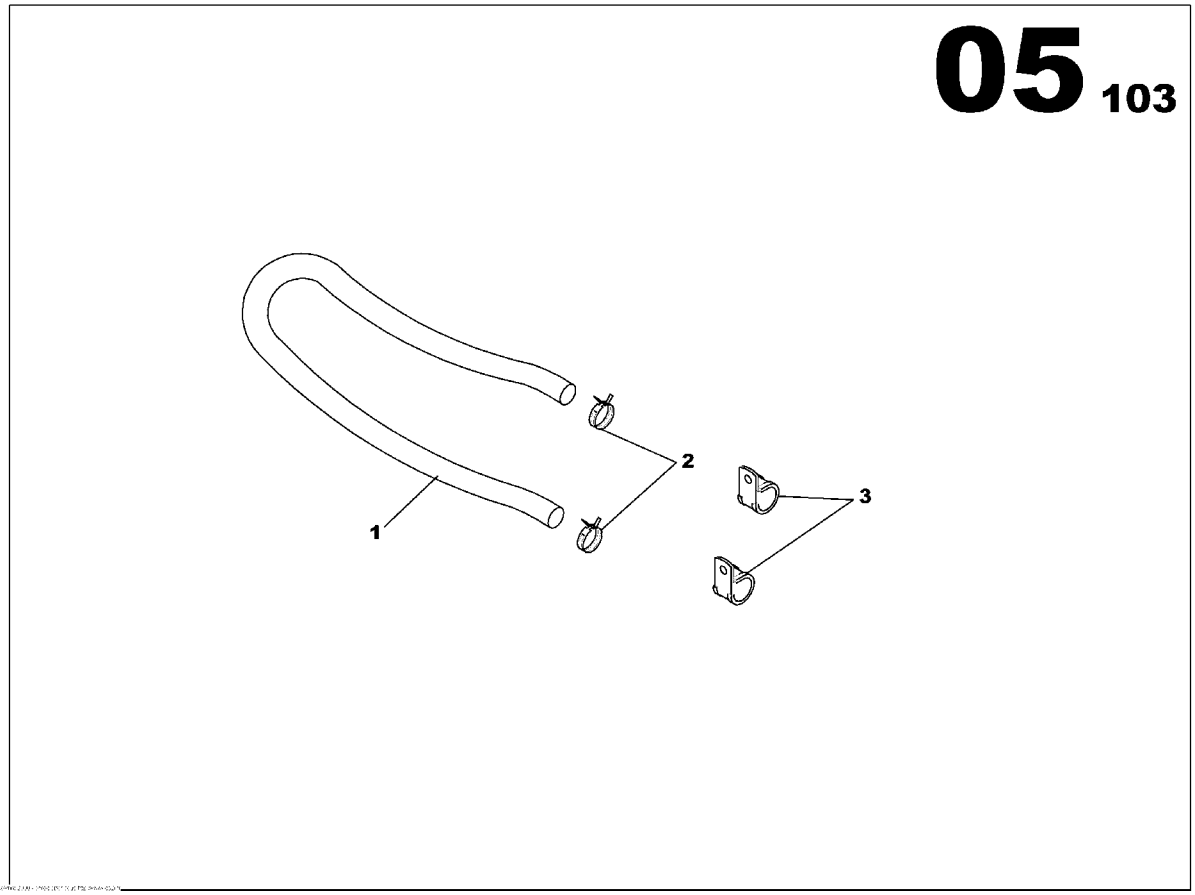

COMBUSTIBLE VENT TANK ASSEMBLY
17130196

Part numbers listed are only parts used in this model

Item	Part No.	Description	Qty	Un	From SN	To SN	Order PN	Page
1	85416436	FLEXIBLE HOSE D8x14	1	ML			85416436	
2	17130824	SPRING CLAMP D10/13	1	UN			17130824	
3	17130816	CLAMP D20	2	UN			17130816	

TRANS. FUEL LEVEL ASSEMBLY

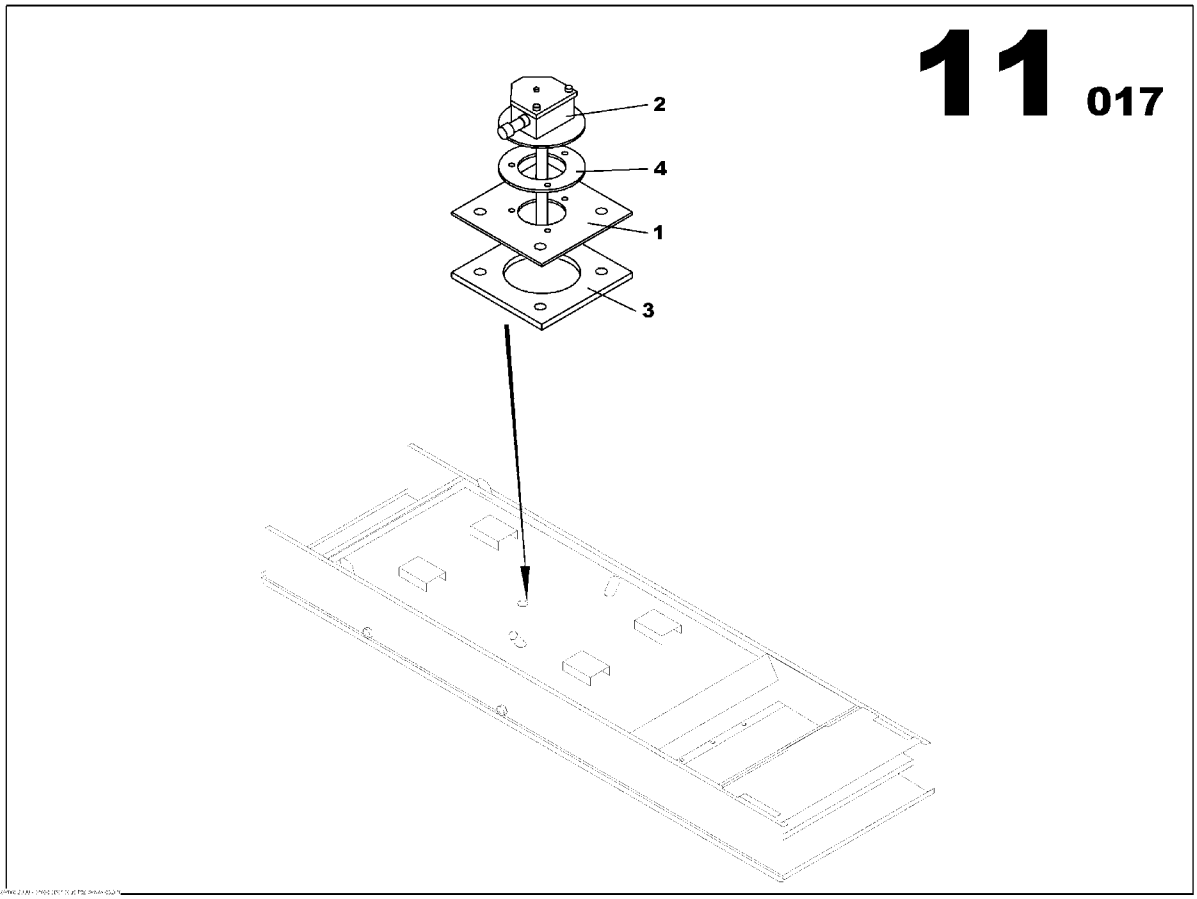

TRANS. FUEL LEVEL ASSEMBLY
85404580

Part numbers listed are only parts used in this model

Item	Part No.	Description	Qty	Un	From SN	To SN	Order PN	Page
1	85403509	LEVEL SENSOR ADAPTER	1	UN			85403509	
2	85404572	LEVEL SENSOR	1	UN			85404572	
3	85409068	SQARE FLANGE GASKET	1	UN			85409068	
4	85409076	ROUND FLANGE GASKET	1	UN			85409076	

LEAKAGE DETECTION RETENTION BUND ASSEMBLY

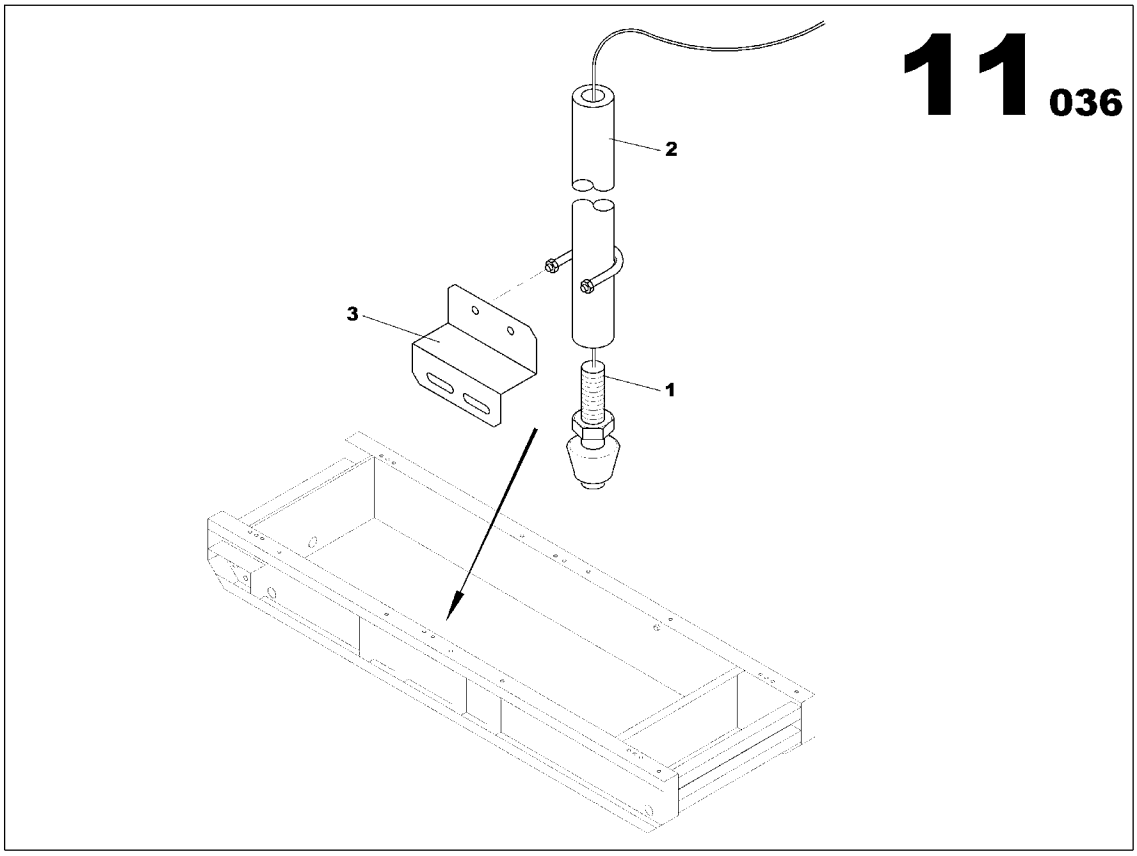

LEAKAGE DETECTION RETENTION BUND ASSEMBLY
17138017

Part numbers listed are only parts used in this model

Item	Part No.	Description	Qty	Un	From SN	To SN	Order PN	Page
1	85417459	LEVEL SWITCH	1	UN			85417459	
2	17132325	LEVEL SWITCH BRACKET	1	UN			17132325	
3	17139692	LEVEL SWITCH BRACKET	1	UN			17139692	

STARTING FUNCTION

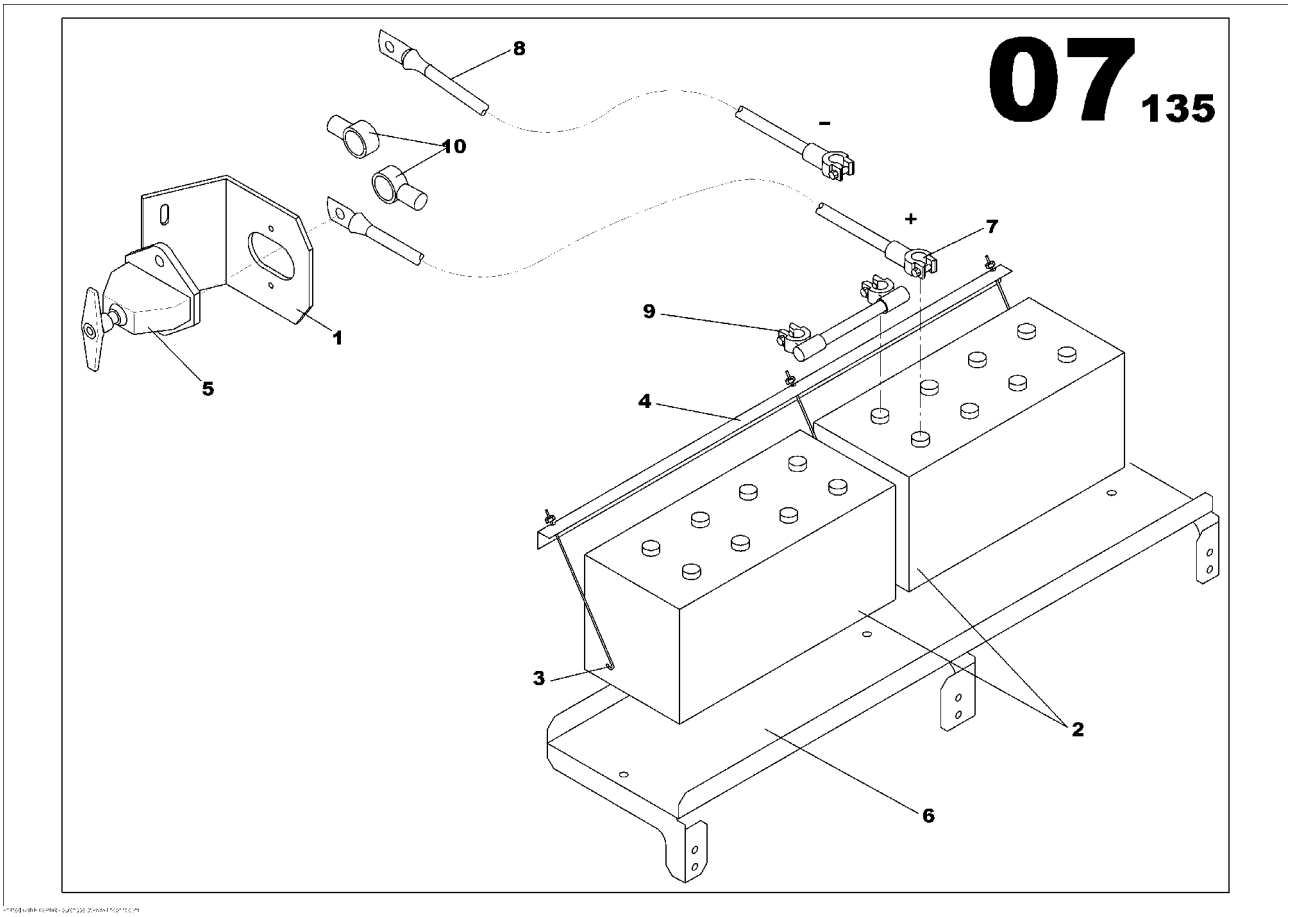

STARTING FUNCTION

Part numbers listed are only parts used in this model

Item	Part No.	Description	Qty	Un	From SN	To SN	Order PN	Page
1	17137720	ELECTRIC STARTER ASSEMBLY	1	UN			17137720	87

ELECTRIC STARTER ASSEMBLY

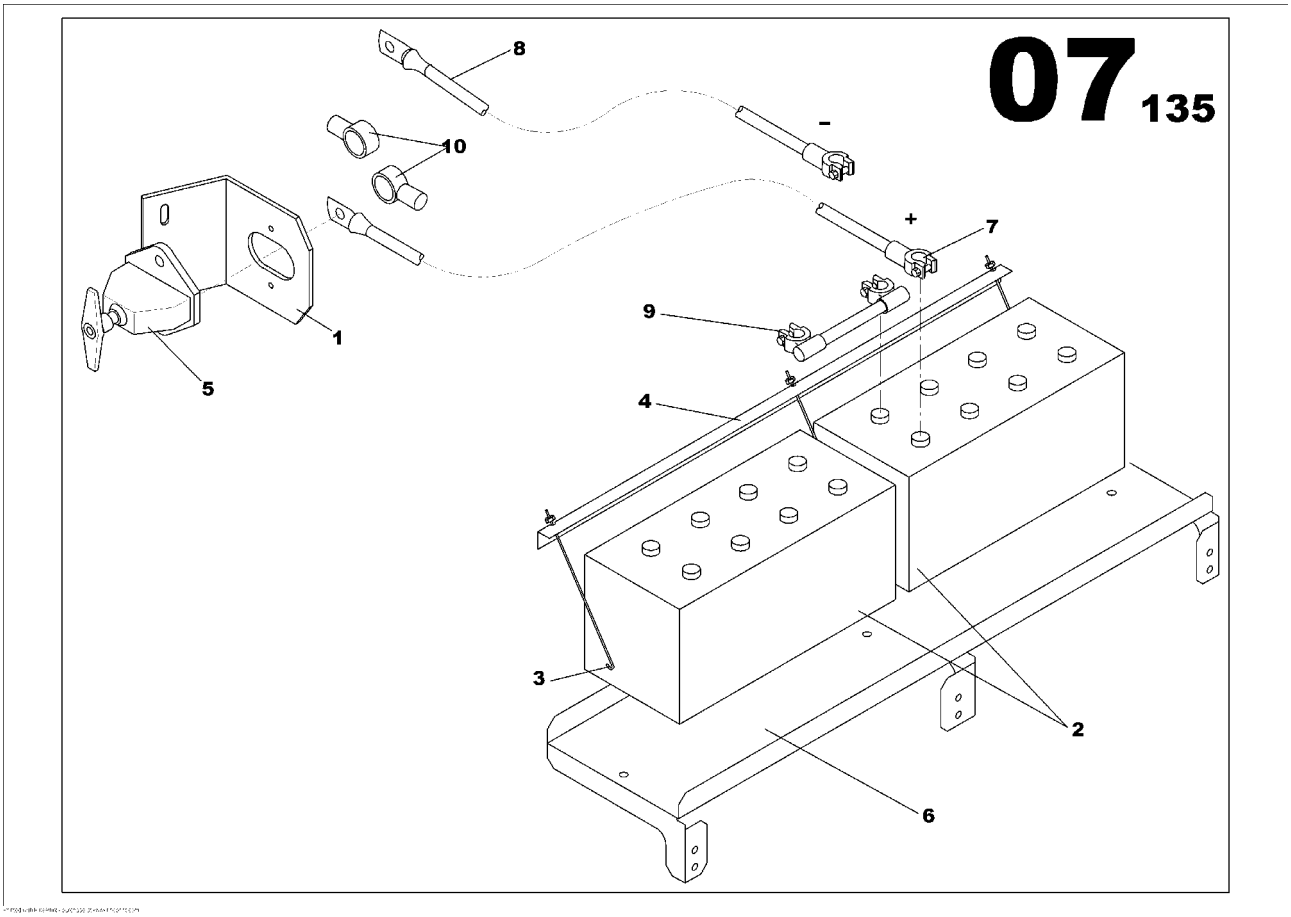

ELECTRIC STARTER ASSEMBLY
17137720

Part numbers listed are only parts used in this model

Item	Part No.	Description	Qty	Un	From SN	To SN	Order PN	Page
1	17137712	ELECTRIC STARTER ASSEMBLY	1	UN			17137712	89

ELECTRIC STARTER ASSEMBLY

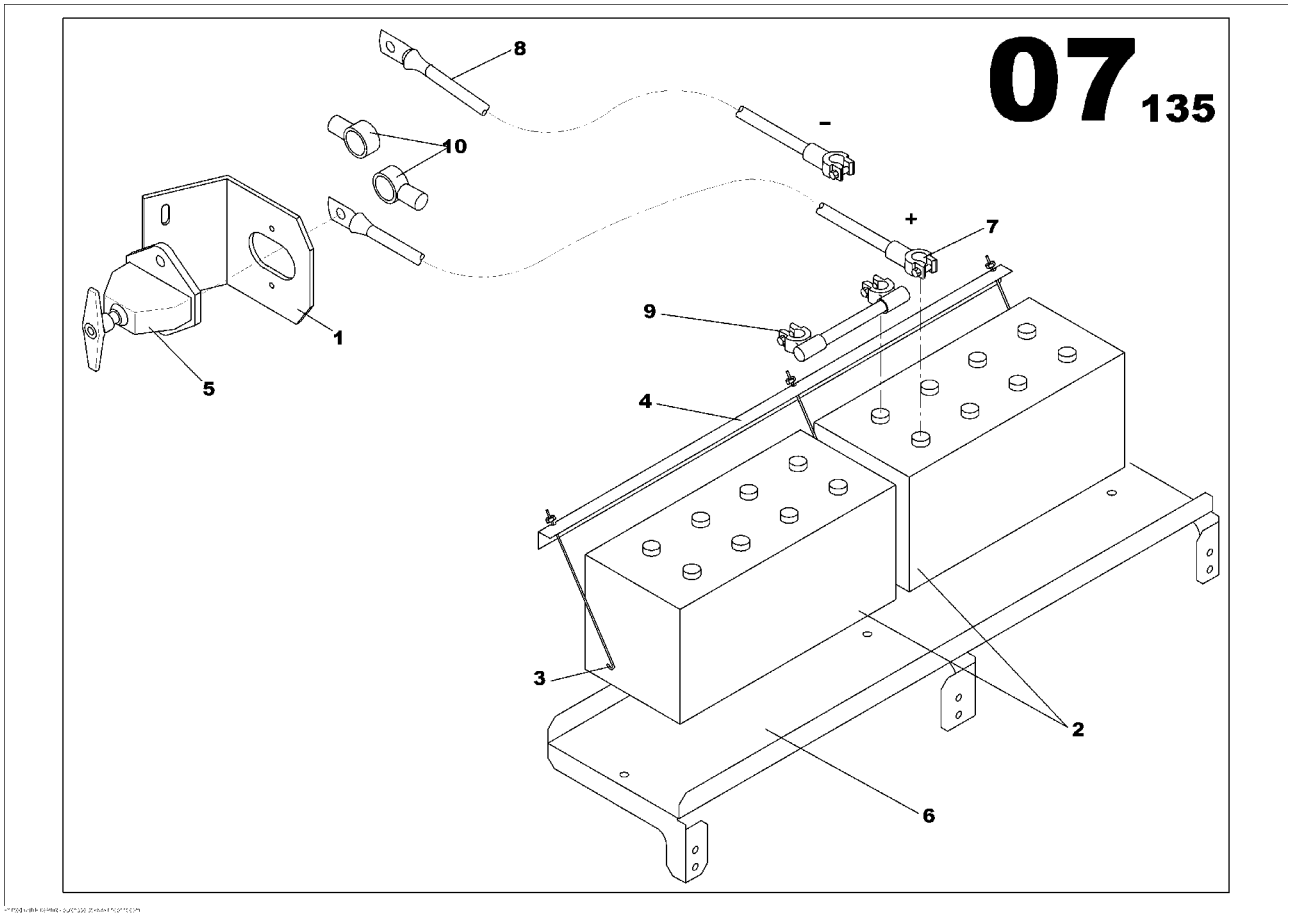

ELECTRIC STARTER ASSEMBLY
17137712

Part numbers listed are only parts used in this model

Item	Part No.	Description	Qty	Un	From SN	To SN	Order PN	Page
1	85403707	BATTERY ISOLATOR BRACKET	1	UN			85403707	
2	17141110	STARTING BATTERY 12V 170Ah 1000AE	2	UN	04007707		17141110	
2	85416568	STARTING BATTERY 12V 160Ah 650A	2	UN	0	04007706	17141110	
3	85424331	ACCUMULATOR FIXING STRETCH	3	UN			85424331	
4	85417814	STARTING BATTERY BRACKET ANGLE BAR 3 HOLES	1	UN			85417814	
5	85403723	BATTERY ISOLATOR SWITCH	1	UN			85403723	
6	17131509	BATTERY SUPPORT BRACKET	1	UN			17131509	
7	85417293	BATTERY CABLE(+) 50mm2 L1000 RED	1	UN			85417293	
8	85417244	BATTERY CABLE(-) 70mm2 L1000 BLACK	1	UN			85417244	
9	85417202	LEFT BATTERY CABLE 50mm2 L195 BLACK	1	UN			85417202	
10	85502235	COWL	2	UN			85502235	

EXHAUST FUNCTION

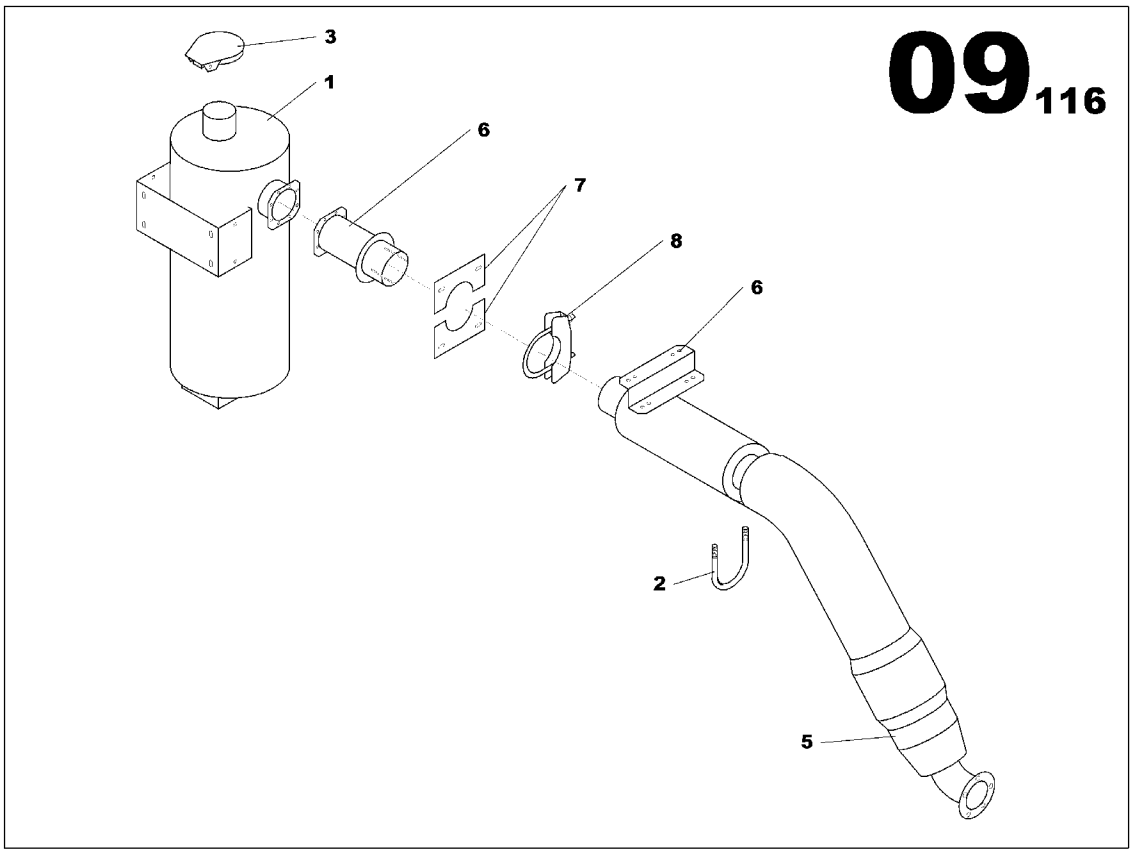

EXHAUST FUNCTION

Part numbers listed are only parts used in this model

Item	Part No.	Description	Qty	Un	From SN	To SN	Order PN	Page
1	85626927	HOT SPOT GUARDS ASSEMBLY	1	UN			85626927	93
2	17137969	EXHAUST MUFFLER M228 ASSEMBLY	1	UN			17137969	97

HOT SPOT GUARDS ASSEMBLY

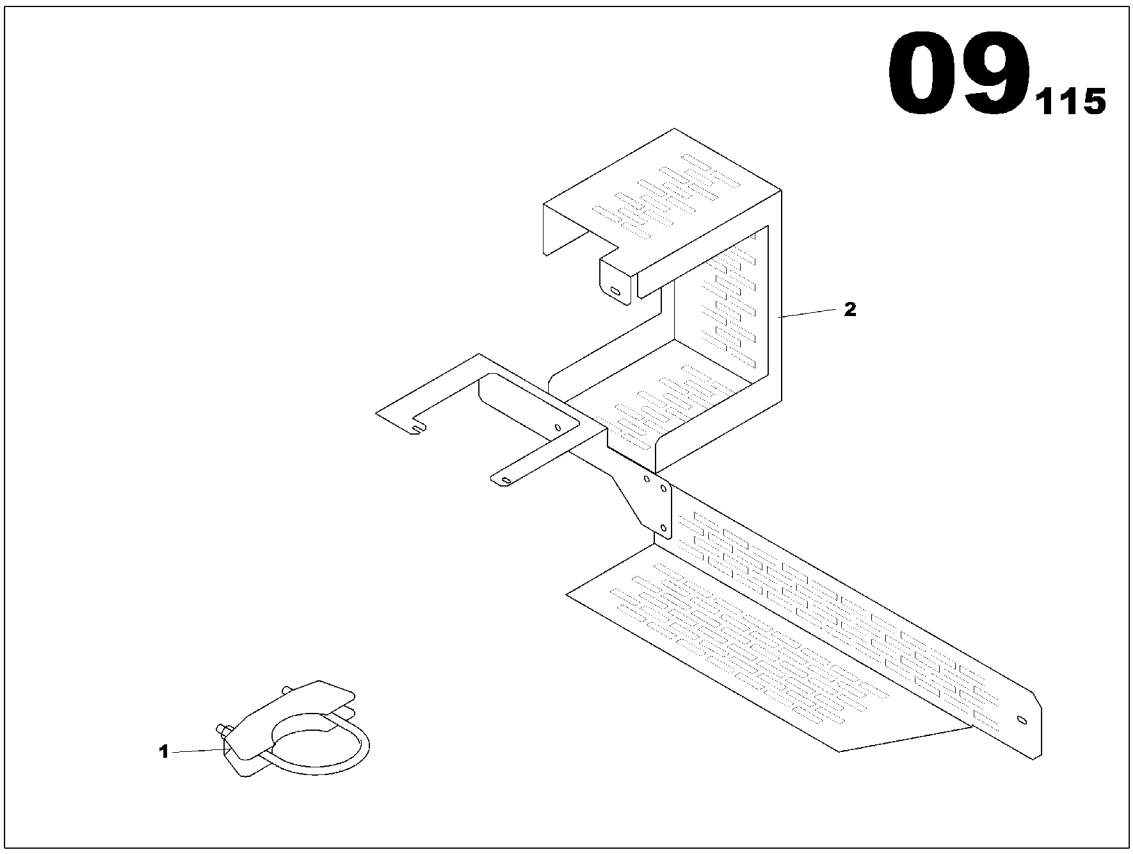

HOT SPOT GUARDS ASSEMBLY
85626927

Part numbers listed are only parts used in this model

Item	Part No.	Description	Qty	Un	From SN	To SN	Order PN	Page
1	17140989	HOSE CLAMP D76	1	UN			17140989	
2	17137811	HOT SPOT GUARDS ASSEMBLY	1	UN			17137811	95

HOT SPOT GUARDS ASSEMBLY

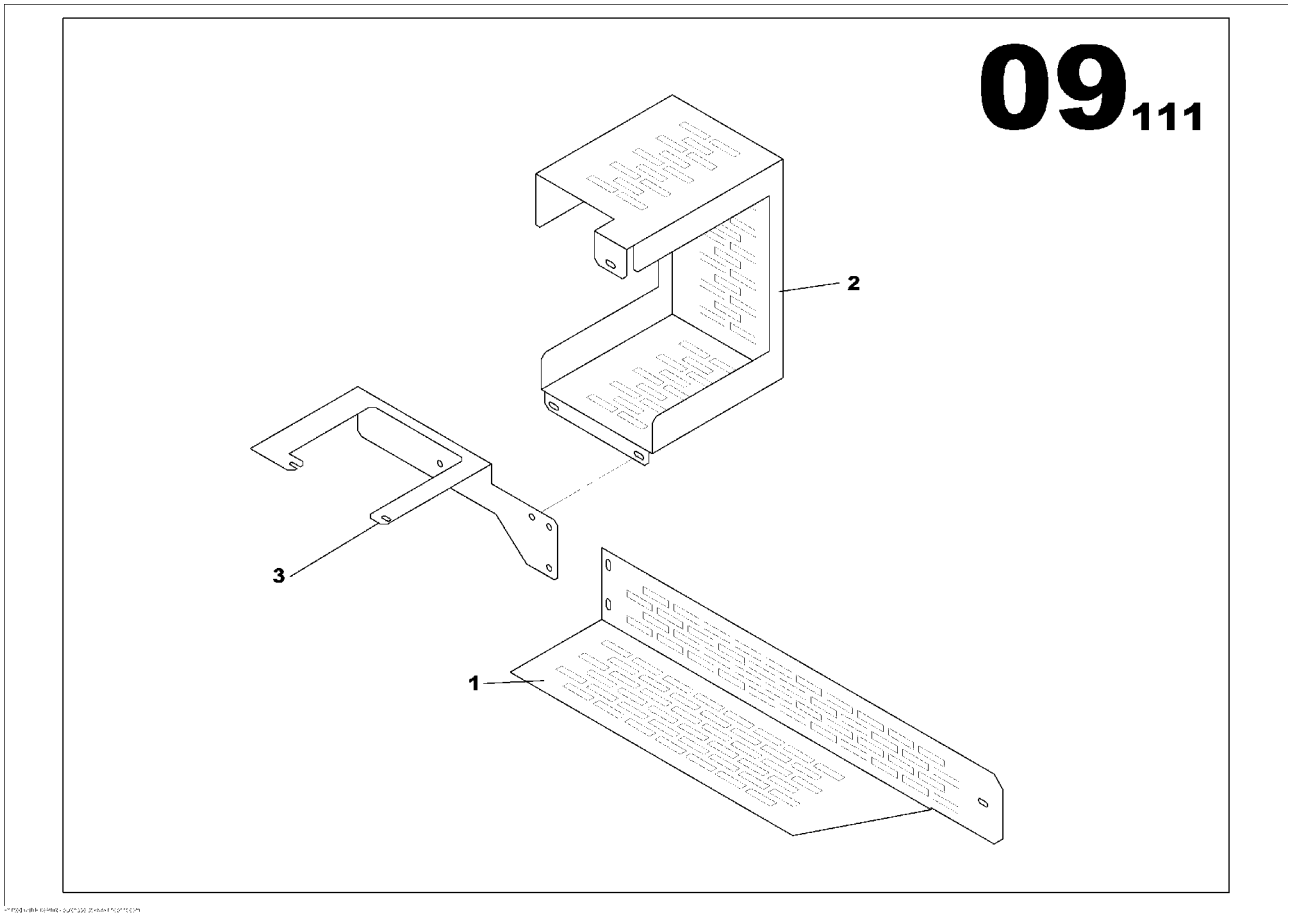

HOT SPOT GUARDS ASSEMBLY
17137811

Part numbers listed are only parts used in this model

Item	Part No.	Description	Qty	Un	From SN	To SN	Order PN	Page
1	17138306	HOT SPOT GUARD	1	UN			17138306	
2	17138314	HOT SPOT GUARD	1	UN			17138314	
3	17138322	HOT SPOT GUARD BRACKET VO 10L	1	UN			17138322	

EXHAUST MUFFLER M228 ASSEMBLY

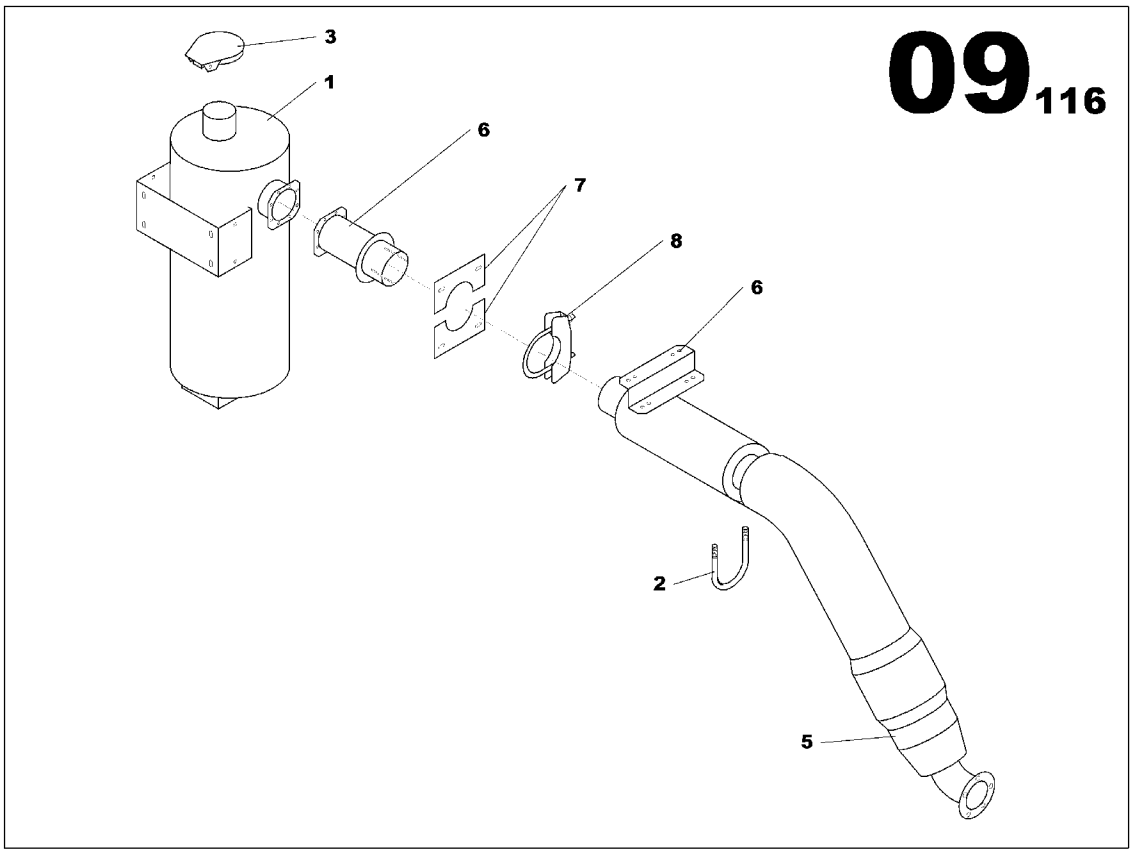

EXHAUST MUFFLER M228 ASSEMBLY
17137969

Part numbers listed are only parts used in this model

Item	Part No.	Description	Qty	Un	From SN	To SN	Order PN	Page
1	17137951	EXHAUST MUFFLER M228 ASSEMBLY	1	UN			17137951	99

EXHAUST MUFFLER M228 ASSEMBLY

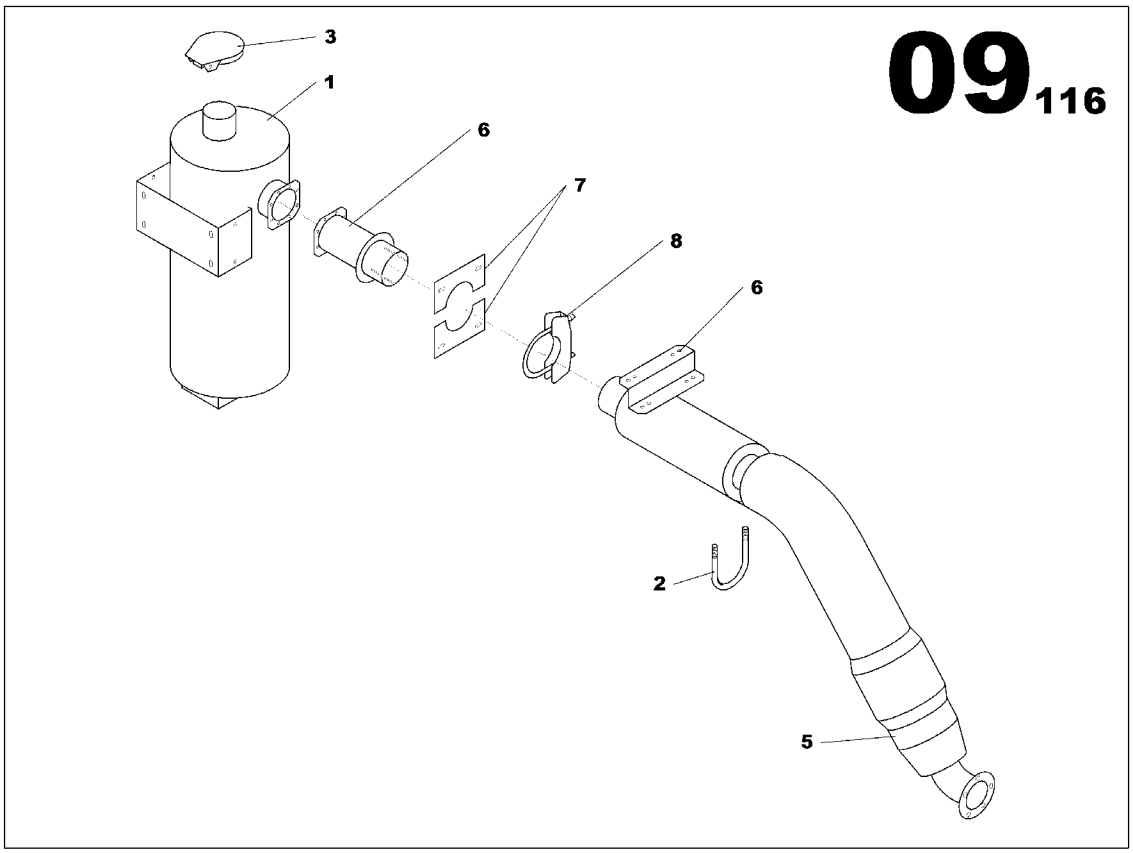

EXHAUST MUFFLER M228 ASSEMBLY
17137951

Part numbers listed are only parts used in this model

Item	Part No.	Description	Qty	Un	From SN	To SN	Order PN	Page
1	85423614	40dB MUFFLER	1	UN			85423614	
2	85496933	HOSE CLAMP	1	UN			85496933	
3	85622256	EXHAUST RAIN FLAP D193	1	UN			85622256	
4	17137936	EXHAUST HOSE M228 BRACKET	1	UN			17137936	
5	17137944	EXHAUST PIPE D140 VO M228	1	UN			17137944	
6	17137993	MUFFLER EXTENSION	1	UN			17137993	
7	85424513	EXHAUST PASSAGE PANEL M405	2	UN			85424513	
8	85417780	HOSE CLAMP D140	1	UN			85417780	

FRAME FUNCTION

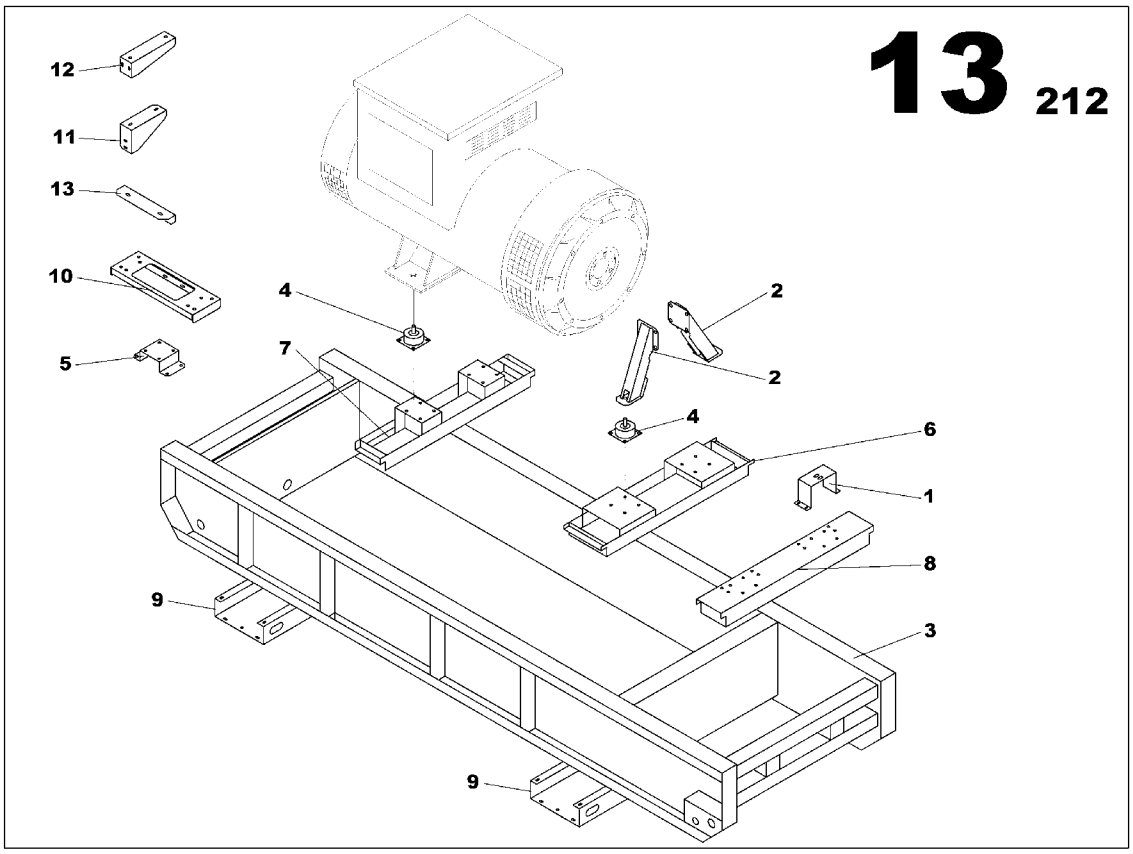

FRAME FUNCTION

Part numbers listed are only parts used in this model

Item	Part No.	Description	Qty	Un	From SN	To SN	Order PN	Page
1	17138165	FRAME ASSEMBLY	1	UN			17138165	103
2	85501799	G330 ACCESSORY ASSEMBLY	1	UN			85501799	107

FRAME ASSEMBLY

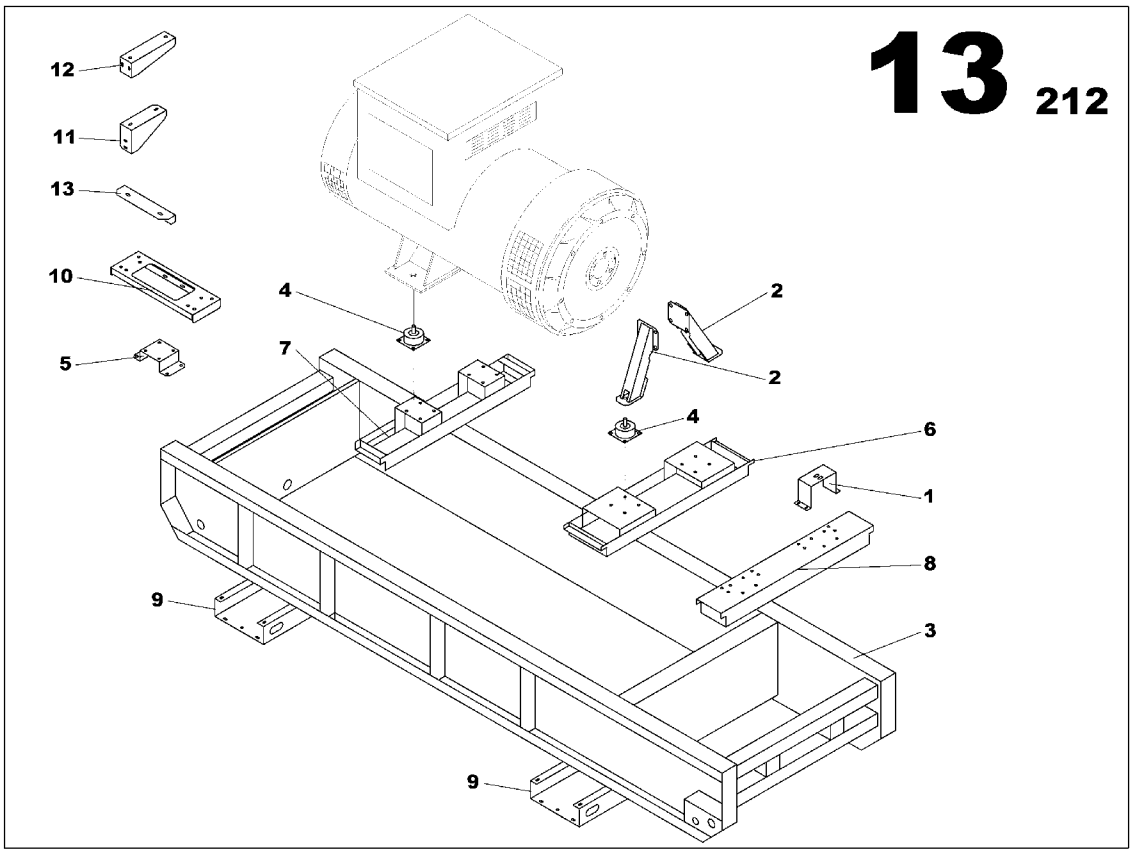

FRAME ASSEMBLY
17138165

Part numbers listed are only parts used in this model

Item	Part No.	Description	Qty	Un	From SN	To SN	Order PN	Page
1	17138157	FRAME M228 ASSEMBLY	1	UN			17138157	105

FRAME M228 ASSEMBLY

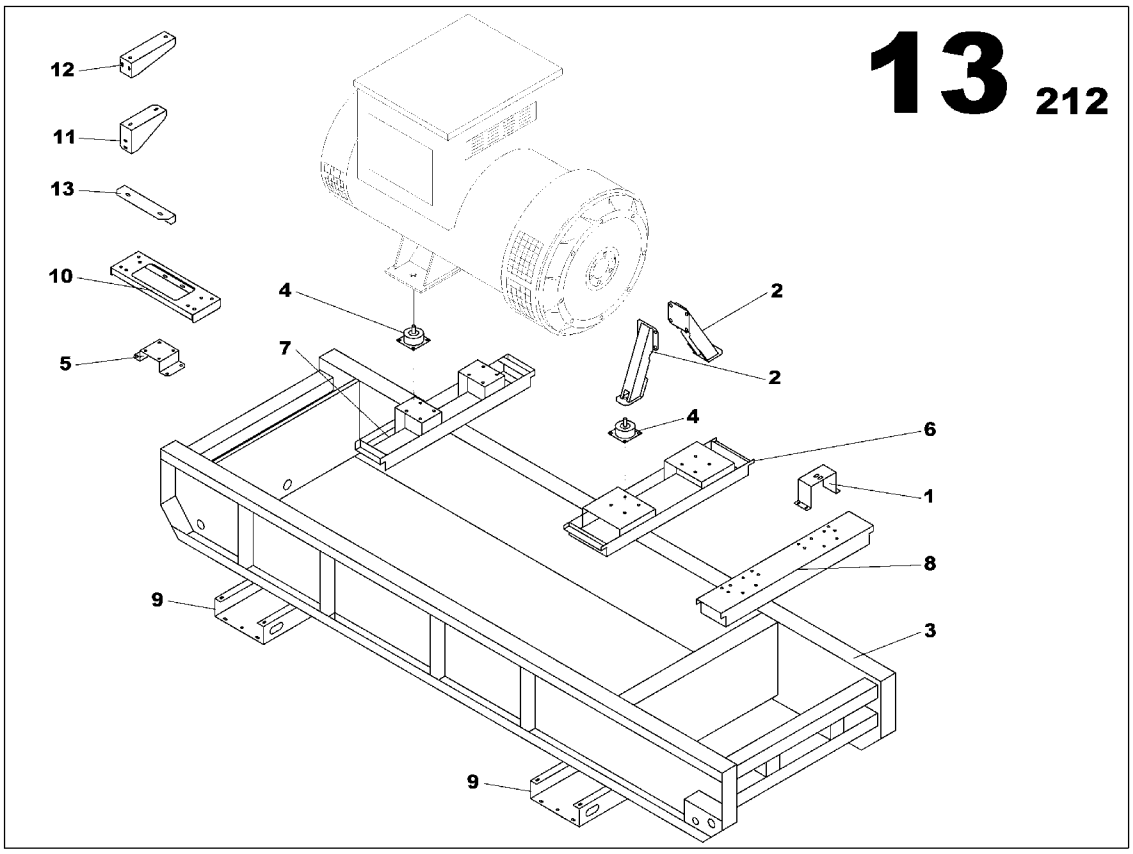

FRAME M228 ASSEMBLY
17138157

Part numbers listed are only parts used in this model

Item	Part No.	Description	Qty	Un	From SN	To SN	Order PN	Page
1	17137092	RADIATOR BRACKET	2	UN			17137092	
2	85423978	ENGINE SUPPORT VO 10/12L LEFT RIGHT SIDE	2	UN			85423978	
3	17138033	FRAME VO TAD1032/TAD1242 M228	1	UN			17138033	
4	85401875	ANTI-VIBRATION MOUNT 0800daN 8.5mm	4	UN			85401875	
5	85497360	ALTERNATOR BRACKET h40	2	UN			85497360	
6	17138363	ENGINE TRAVERSE M228	1	UN			17138363	
7	17138389	ALTERNATOR TRAVERSE M228	1	UN			17138389	
8	17138397	RADIATOR TRAVERSE	1	UN			17138397	
9	17138439	FORK LIFT CHANNEL	2	UN			17138439	
10	17132218	CONTROL PANEL BRACKET M227	1	UN			17132218	
11	17139726	BRACKET SQUARE	1	UN			17139726	
12	17140112	AIPR BRACKET	1	UN			17140112	
13	17140120	AIPR BRACKET	1	UN			17140120	

G330 ACCESSORY ASSEMBLY

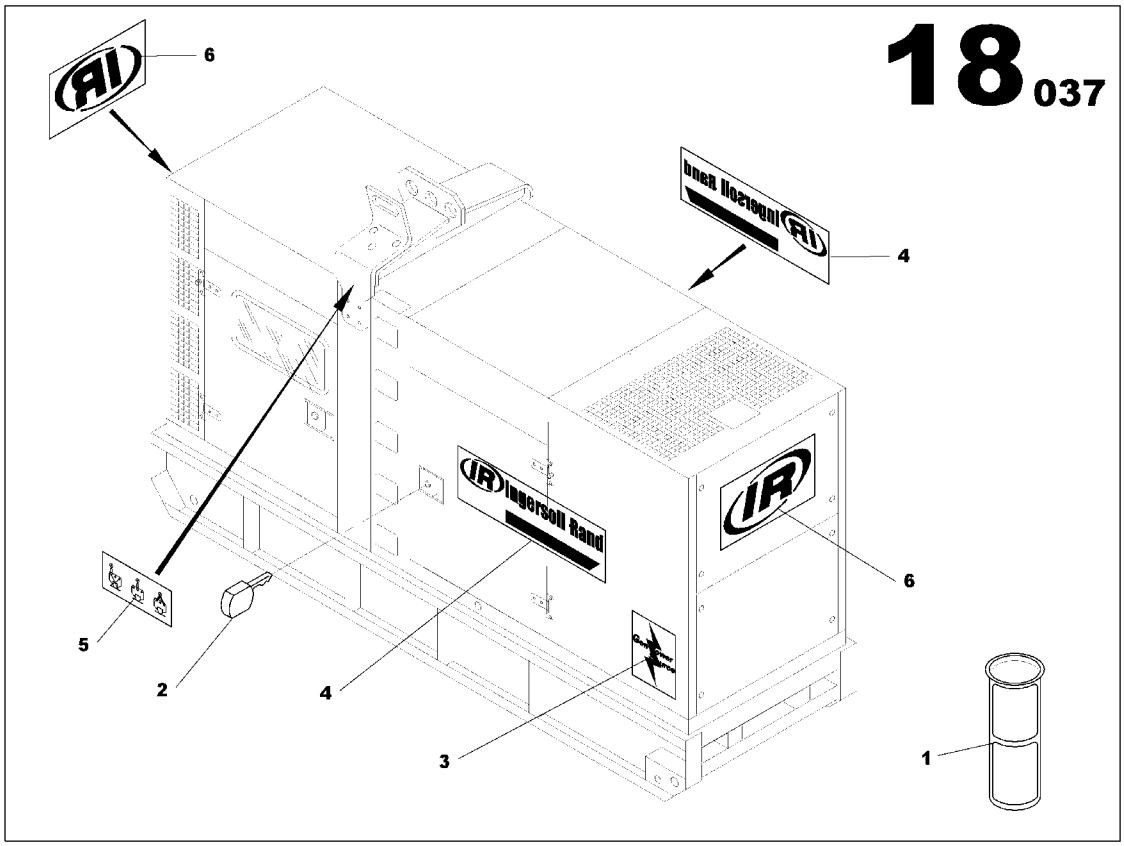

G330 ACCESSORY ASSEMBLY
85501799

Part numbers listed are only parts used in this model

Item	Part No.	Description	Qty	Un	From SN	To SN	Order PN	Page
1	85633386	FUEL FILTER-SCREEN	1	UN			85633386	
2	85509263	WBH LATCHE KEY	1	UN			85509263	
3	85506467	STICKER	1	UN			85506467	
4	85503860	STICKER G330	2	UN			85503860	
5	22207054	STICKER OPERATING INSTRUCTIONS	1	UN			22207054	
6	85631927	DECALS ASSEMBLY	1	UN			85631927	109

DECALS ASSEMBLY

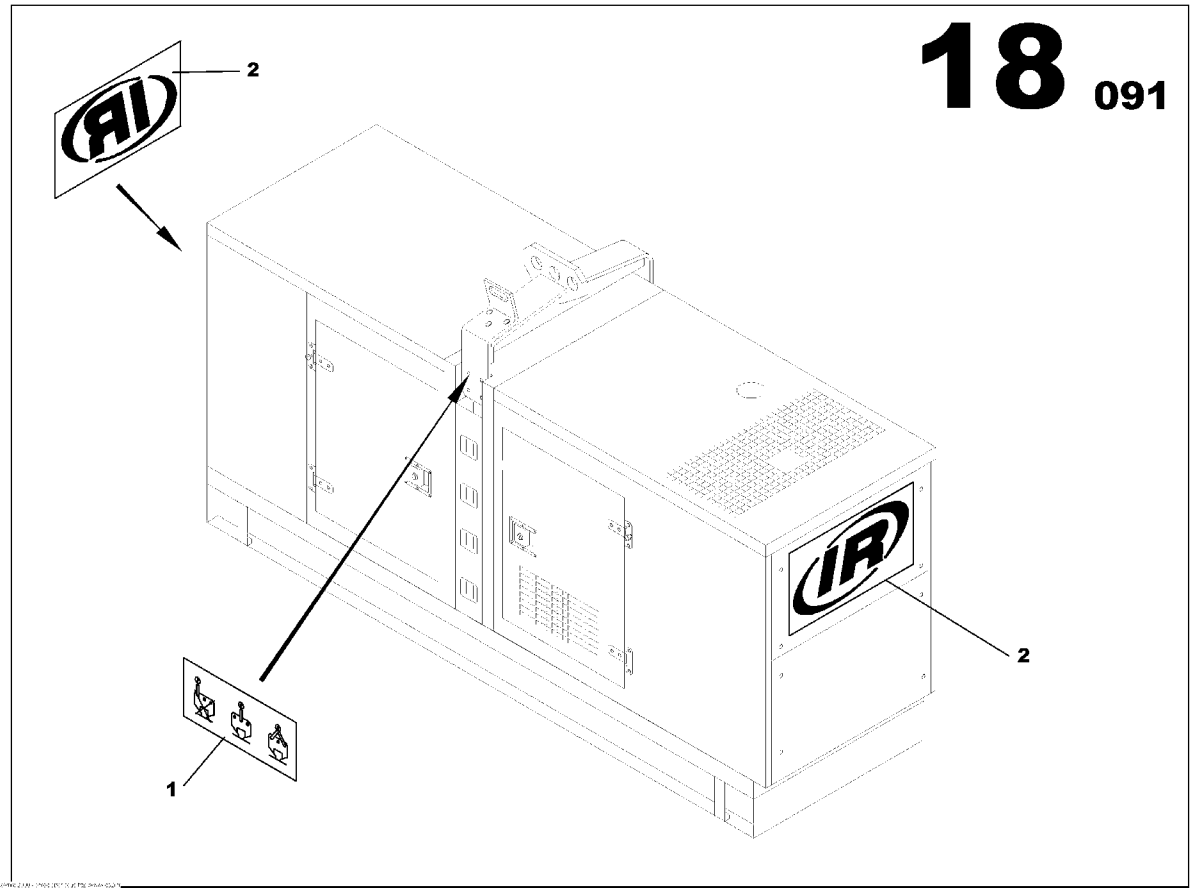

DECALS ASSEMBLY
85631927

Part numbers listed are only parts used in this model

Item	Part No.	Description	Qty	Un	From SN	To SN	Order PN	Page
1	85500213	STICKER IR	2	UN			85500213	
2	85623684	STICKER CANOPY MANUTENTION SYMBOL	1	UN			85623684	

CANOPY FUNCTION

CANOPY FUNCTION

Part numbers listed are only parts used in this model

Item	Part No.	Description	Qty	Un	From SN	To SN	Order PN	Page
1	17138140	FITTINGS M228 VO TAD1032GE ASSEMBLY	1	UN			17138140	113
2	17138876	CANOPY M228 ASSEMBLY	1	UN			17138876	125
3	17139486	CENTRAL LIFTING ARCH ASSEMBLY	1	UN			17139486	131
4	85634616	EMERGENCY STOP PANEL ASSEMBLY	1	UN			85634616	
5	85407906	EARTH ROD WITH CABLE CANOPY ASSEMBLY	1	UN			85407906	135

FITTINGS M228 VO TAD1032GE ASSEMBLY

FITTINGS M228 VO TAD1032GE ASSEMBLY
17138140

Part numbers listed are only parts used in this model

Item	Part No.	Description	Qty	Un	From SN	To SN	Order PN	Page
1	17138132	M228 MISCELLANEOUS ASSEMBLY	1	UN			17138132	115

M228 MISCELLANEOUS ASSEMBLY

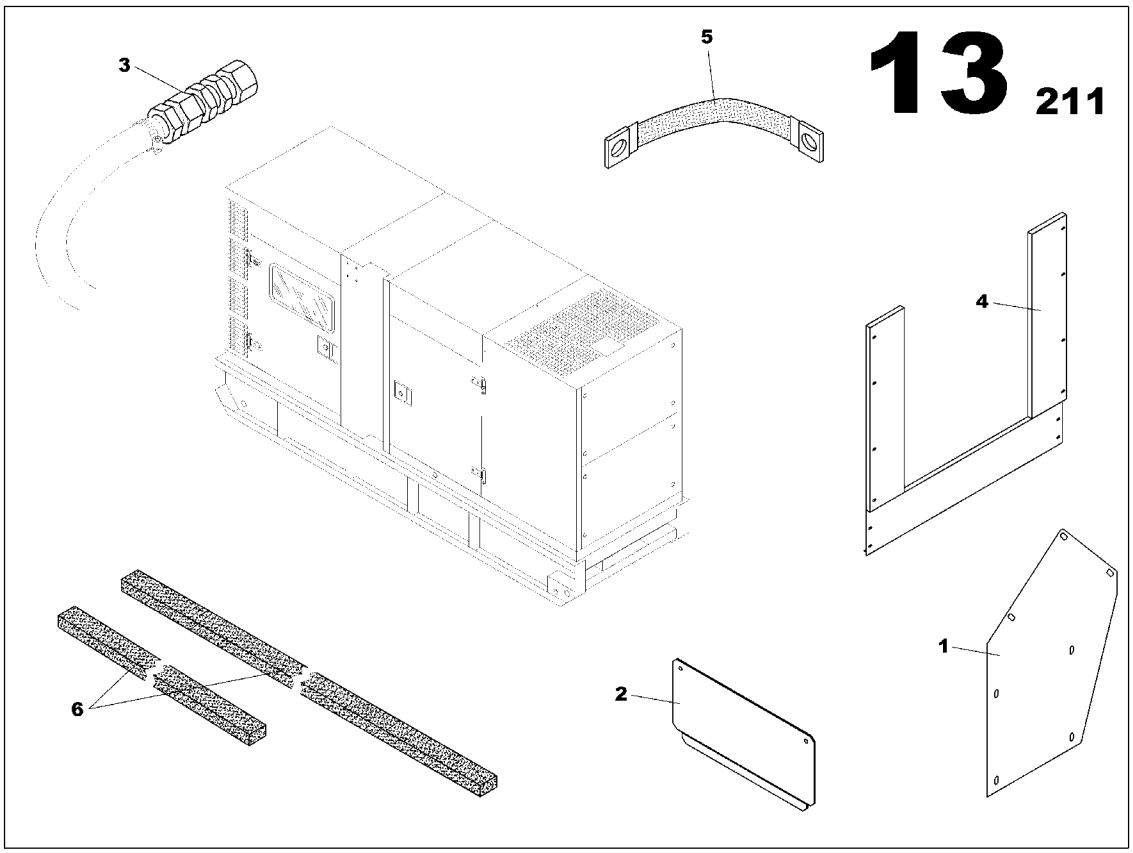

M228 MISCELLANEOUS ASSEMBLY
17138132

Part numbers listed are only parts used in this model

Item	Part No.	Description	Qty	Un	From SN	To SN	Order PN	Page
1	17137779	AIR FILTER BRACKET	1	UN			17137779	
2	17139809	CABLE OUTLET PLATE	1	UN			17139809	
3	17137175	OIL CRANKCASE	1	UN			17137175	117
4	17139197	RADIATOR BASE M228 PLATE ASSEMBLY	1	UN			17139197	119
5	85407922	GROUND WIRES ASSEMBLY	1	UN			85407922	121
6	17141003	CANOPY/FRAME M228 GASKET ASSEMBLY	1	UN			17141003	123

OIL CRANKCASE

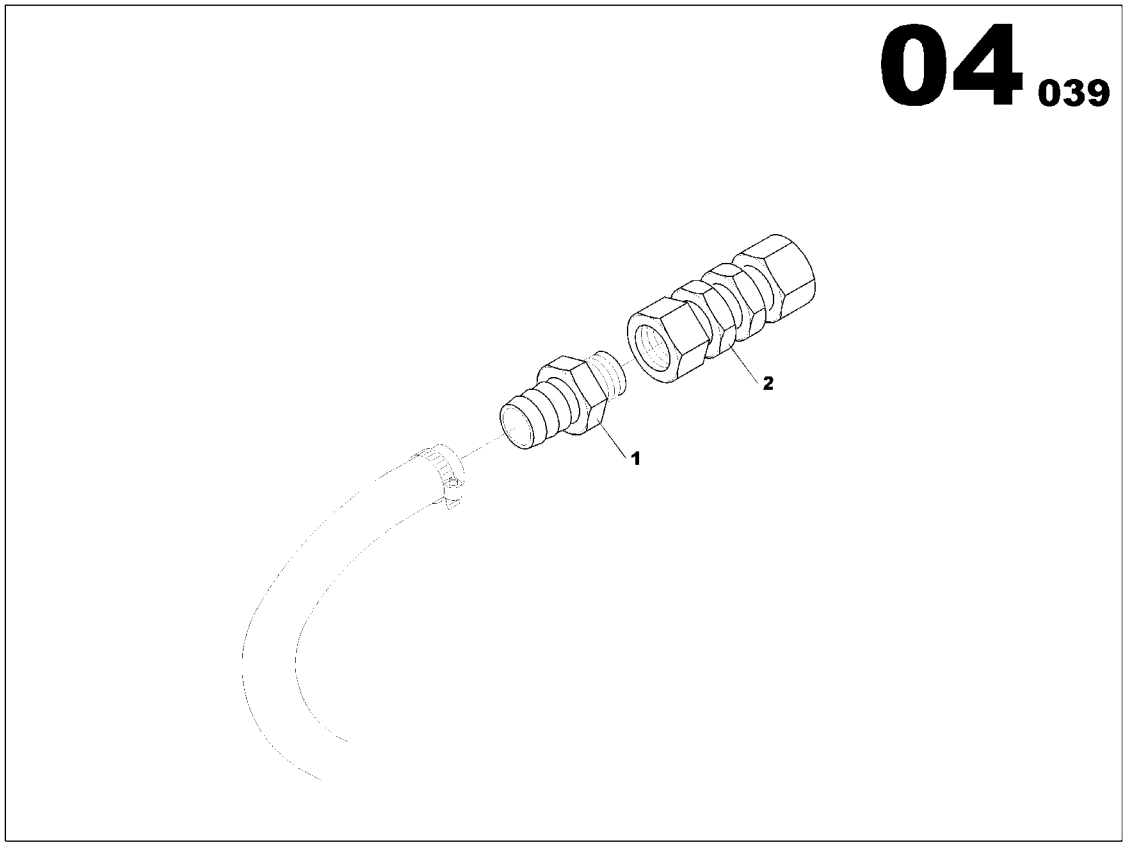

OIL CRANKCASE
17137175

Part numbers listed are only parts used in this model

Item	Part No.	Description	Qty	Un	From SN	To SN	Order PN	Page
1	17140955	PIPE UNION MAL/MAL 1G	1	UN			17140955	
2	17140971	PIPE UNION FEM/FEM 1G	1	UN			17140971	

RADIATOR BASE M228 PLATE ASSEMBLY

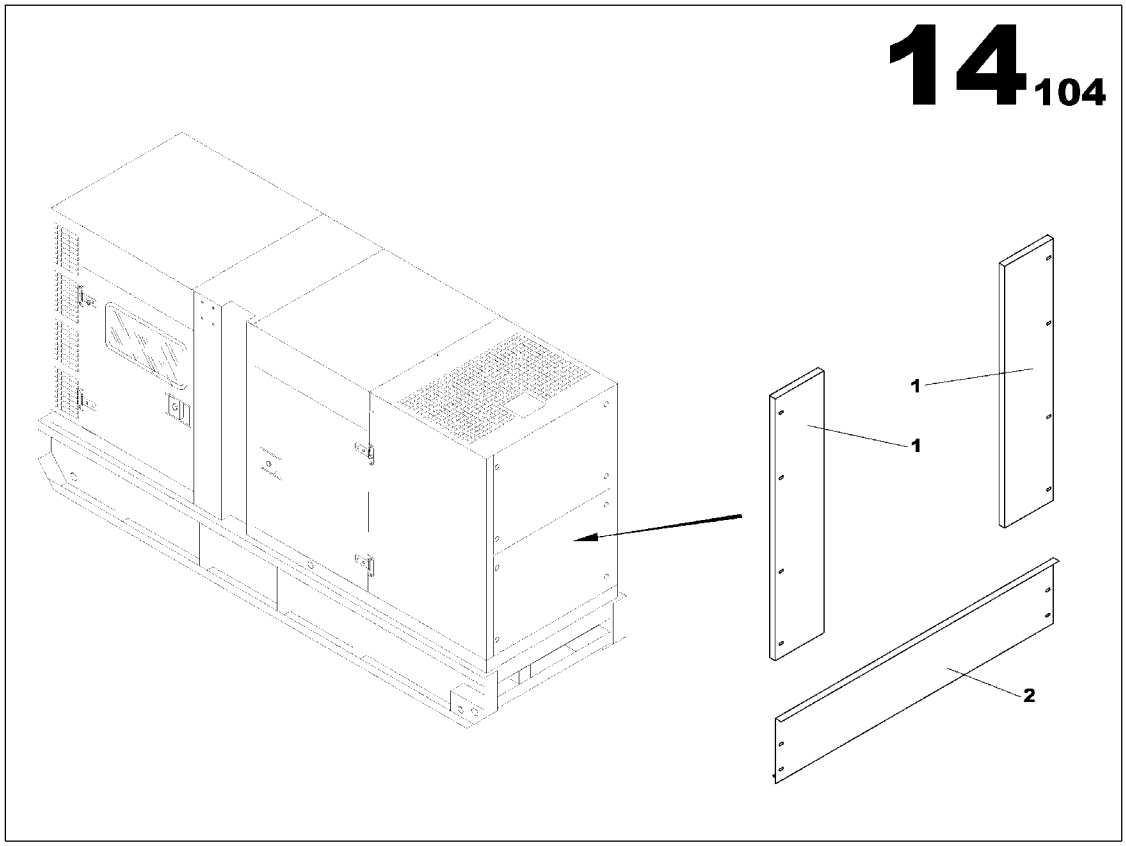

RADIATOR BASE M228 PLATE ASSEMBLY
17139197

Part numbers listed are only parts used in this model

Item	Part No.	Description	Qty	Un	From SN	To SN	Order PN	Page
1	17139080	RADIATOR PANEL LOWER M228	1	UN			17139080	
2	17139189	RADIATOR LEFT/RIGHT PANEL M228	2	UN			17139189	

GROUND WIRES ASSEMBLY

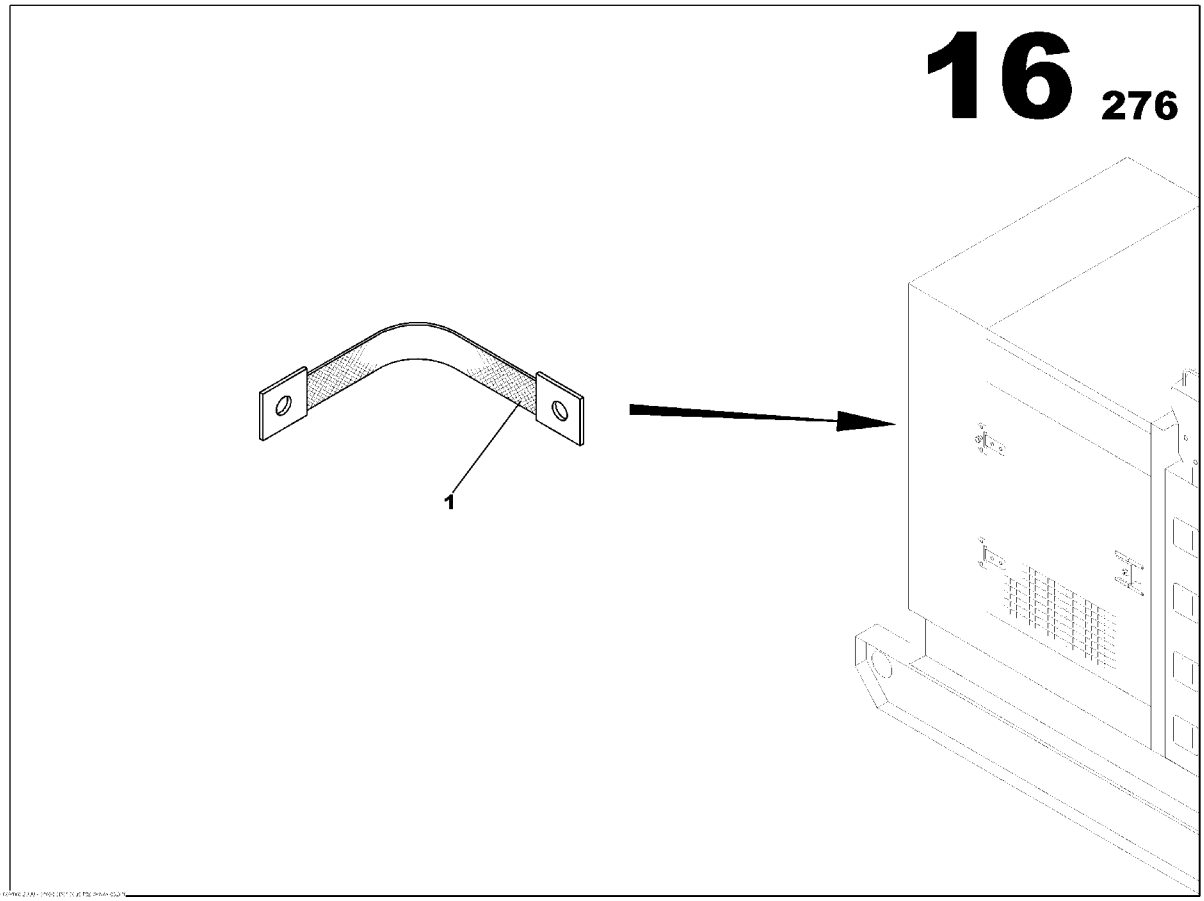

GROUND WIRES ASSEMBLY
85407922

Part numbers listed are only parts used in this model

Item	Part No.	Description	Qty	Un	From SN	To SN	Order PN	Page
1	85406460	GROUND WIRE 16mm2	4	UN			85406460	

CANOPY/FRAME M228 GASKET ASSEMBLY

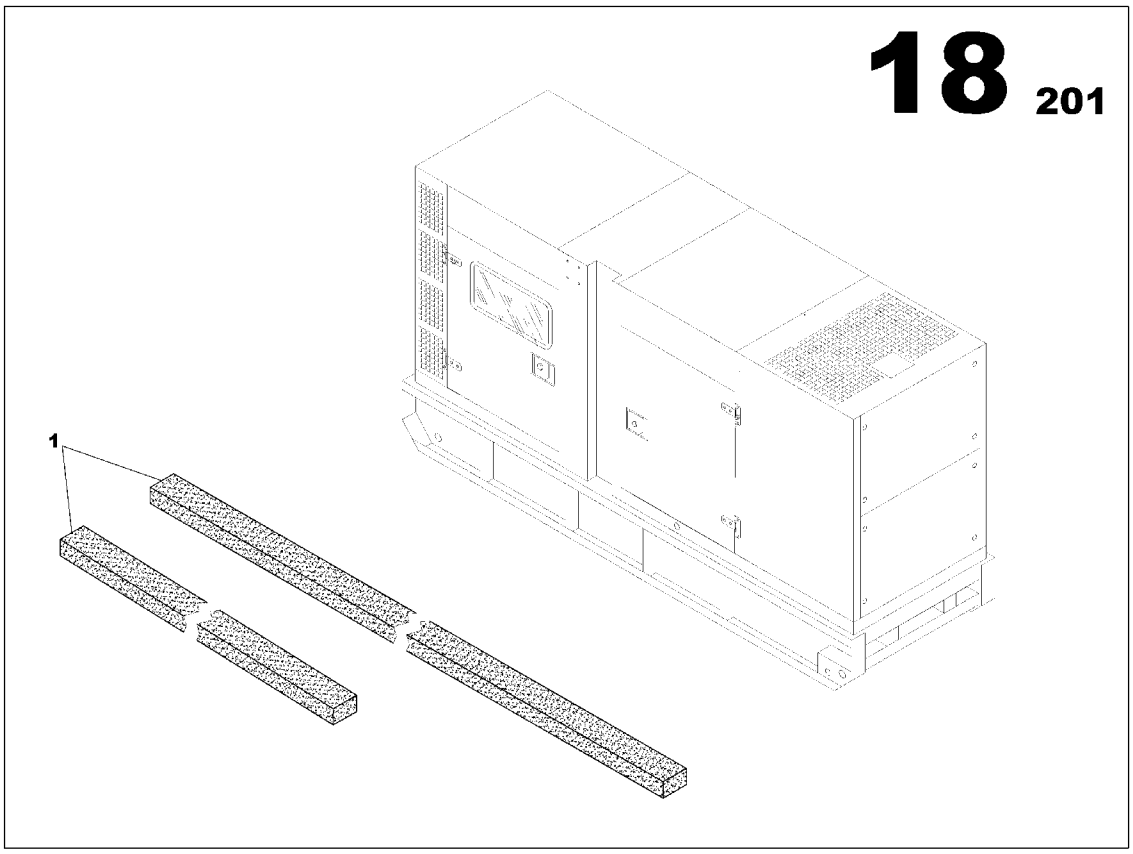

CANOPY/FRAME M228 GASKET ASSEMBLY
17141003

Part numbers listed are only parts used in this model

Item	Part No.	Description	Qty	Un	From SN	To SN	Order PN	Page
1	17133349	LINEAR SEAL	1.32	M			17133349	
1	17133349	LINEAR SEAL	3.16	M			17133349	

CANOPY M228 ASSEMBLY

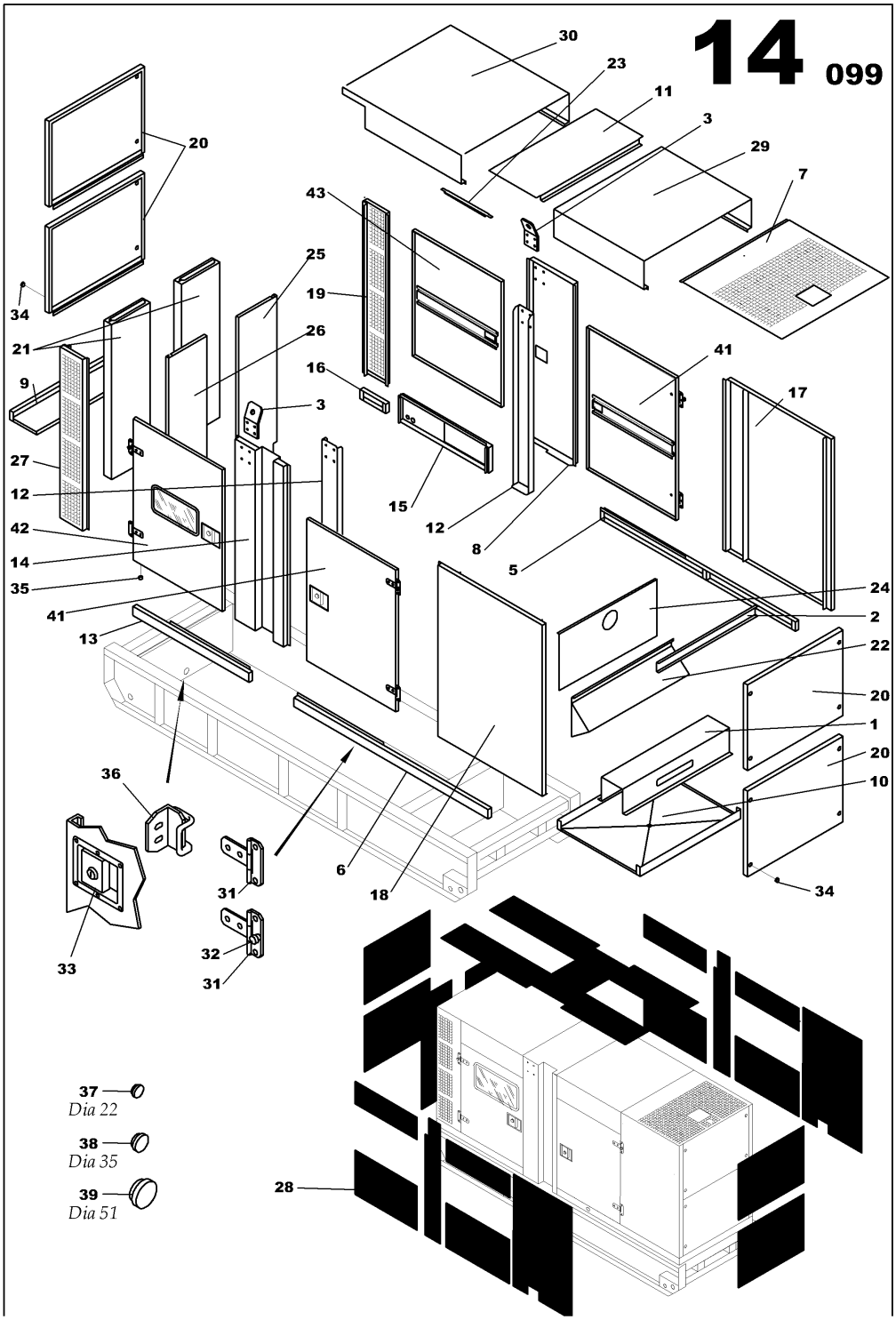

Printed with FinePrint - purchase at www.fineprint.com

CANOPY M228 ASSEMBLY
17138876

Part numbers listed are only parts used in this model

Item	Part No.	Description	Qty	Un	From SN	To SN	Order PN	Page
1	17138868	CANOPY M228 ASSEMBLY	1	UN			17138868	127

CANOPY M228 ASSEMBLY

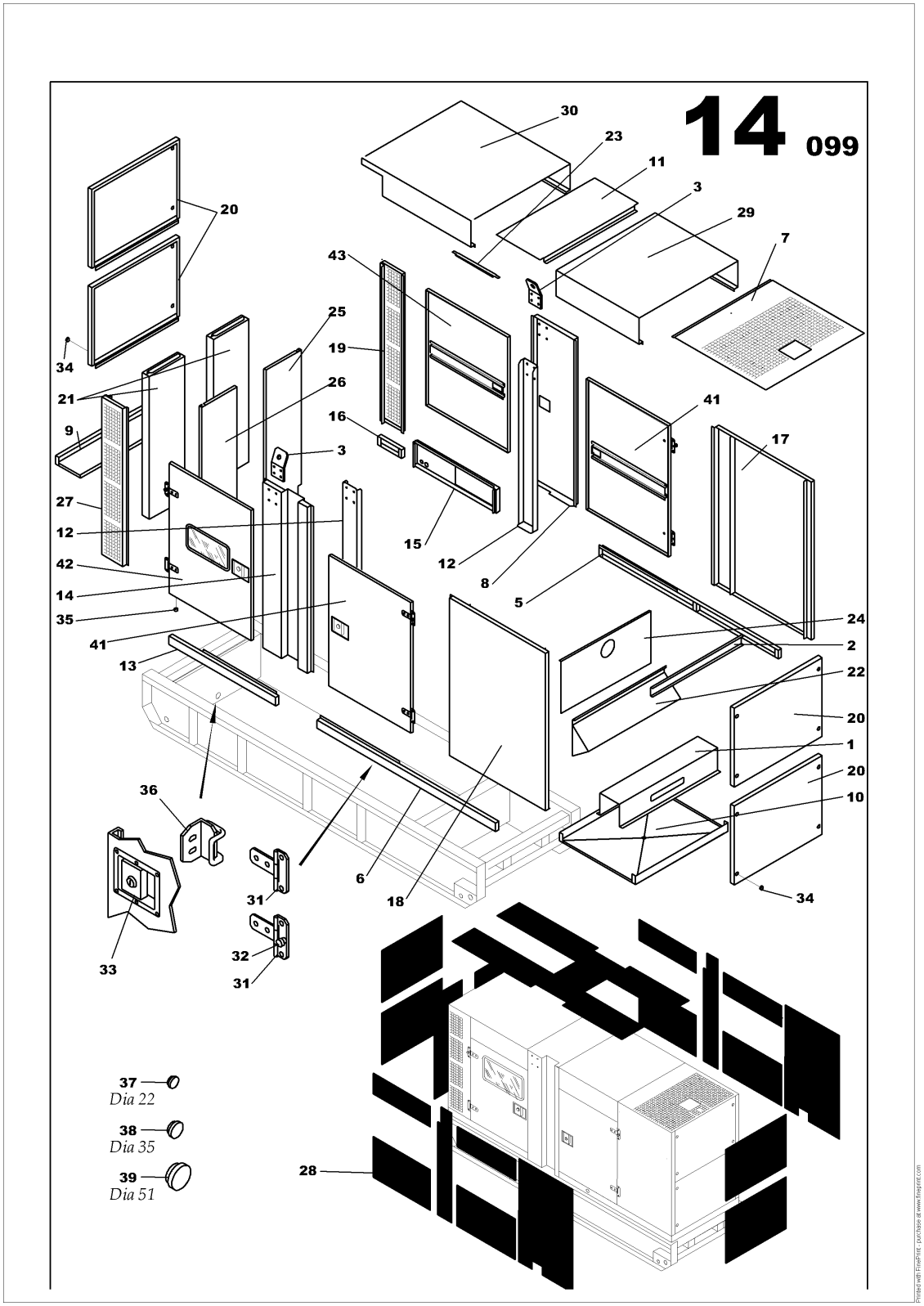

CANOPY M228 ASSEMBLY
17138868

Part numbers listed are only parts used in this model

Item	Part No.	Description	Qty	Un	From SN	To SN	Order PN	Page
1	17137829	MUFFLER BRACKET	1	UN			17137829	
2	17137886	MUFFLER BRACKET	1	UN			17137886	
3	85497386	LIFTING BRACKET M424/425/426	2	UN			85497386	
5	17138538	BASEFRAME SIDE M228	1	UN			17138538	
6	17138546	BASEFRAME SIDE M228	1	UN			17138546	
7	17138553	AIR OUTLET LOUVER M228	1	UN			17138553	
8	17138561	SIDE SUPPORT ARCH RIGHT M228	1	UN			17138561	
9	17138579	REAR CLOSURE PANEL CANOPY M228	1	UN			17138579	
10	17138587	HOOD FRONT UNDERSHEETING M228	1	UN			17138587	
11	17138595	HOOD SUPPORT ARCH M228	1	UN			17138595	
12	17138686	SUPPORT ARCH M228/229	2	UN			17138686	
13	17138694	BASEFRAME SIDE M228	1	UN			17138694	
14	17138777	SIDE SUPPORT ARCH LEFT M228	1	UN			17138777	
15	17138819	BASEFRAME SIDE M228	1	UN			17138819	
16	17138827	BASEFRAME SIDE M228	1	UN			17138827	
17	17138991	RIGHT FRONT PLENUM PANEL M228	1	UN			17138991	
18	17139007	LEFT FORWARD PLENUM PANEL M228	1	UN			17139007	
19	17139015	RIGHT REAR PLENUM PANEL M228	1	UN			17139015	
20	17139023	M228/229 HEAD/REAR PANEL	4	UN			17139023	
21	17139031	SOUND SHIELD M228/229	2	UN			17139031	
22	17139049	AIR DEFLECTOR M228 FRONT	1	UN			17139049	
23	17139056	CANOPY CENTRAL ARCH ISOLATION BRACKET M228/M229	3	UN			17139056	
24	17139064	RADIATOR UPPER PANEL M228	1	UN			17139064	
25	17139247	AIR DEFLECTOR M228 REAR RIGHT	1	UN			17139247	
26	17139254	AIR DEFLECTOR M228 REAR LEFT	1	UN			17139254	
27	17139320	LEFT REAR PLENUM PANEL M228	1	UN			17139320	
28	17139346	SOUNDPROOF PANELS BATCH M228	1	UN			17139346	
29	17139387	CANOPY FRONT TOP M228	1	UN			17139387	
30	17139395	CANOPY REAR TOP M228	1	UN			17139395	
31	85406155	DOOR HINGE	8	UN			85406155	
32	85406189	ANTI-VIBRATION MOUNT 140daN 15mm	4	UN			85406189	
33	85509305	CANOPY DOOR LOCK KEY LOCK *-Key: N° 455 supply without key*	4	UN			85509305	
34	85417186	PLUG D22.8	16	UN			85417186	
35	85406213	PLUG D6.9	6	UN			85406213	
36	85492460	STRIKER PLATE M400 CANOPY DOOR	4	UN			85492460	
37	17139577	PLUG D22	1	UN			17139577	

CANOPY M228 ASSEMBLY

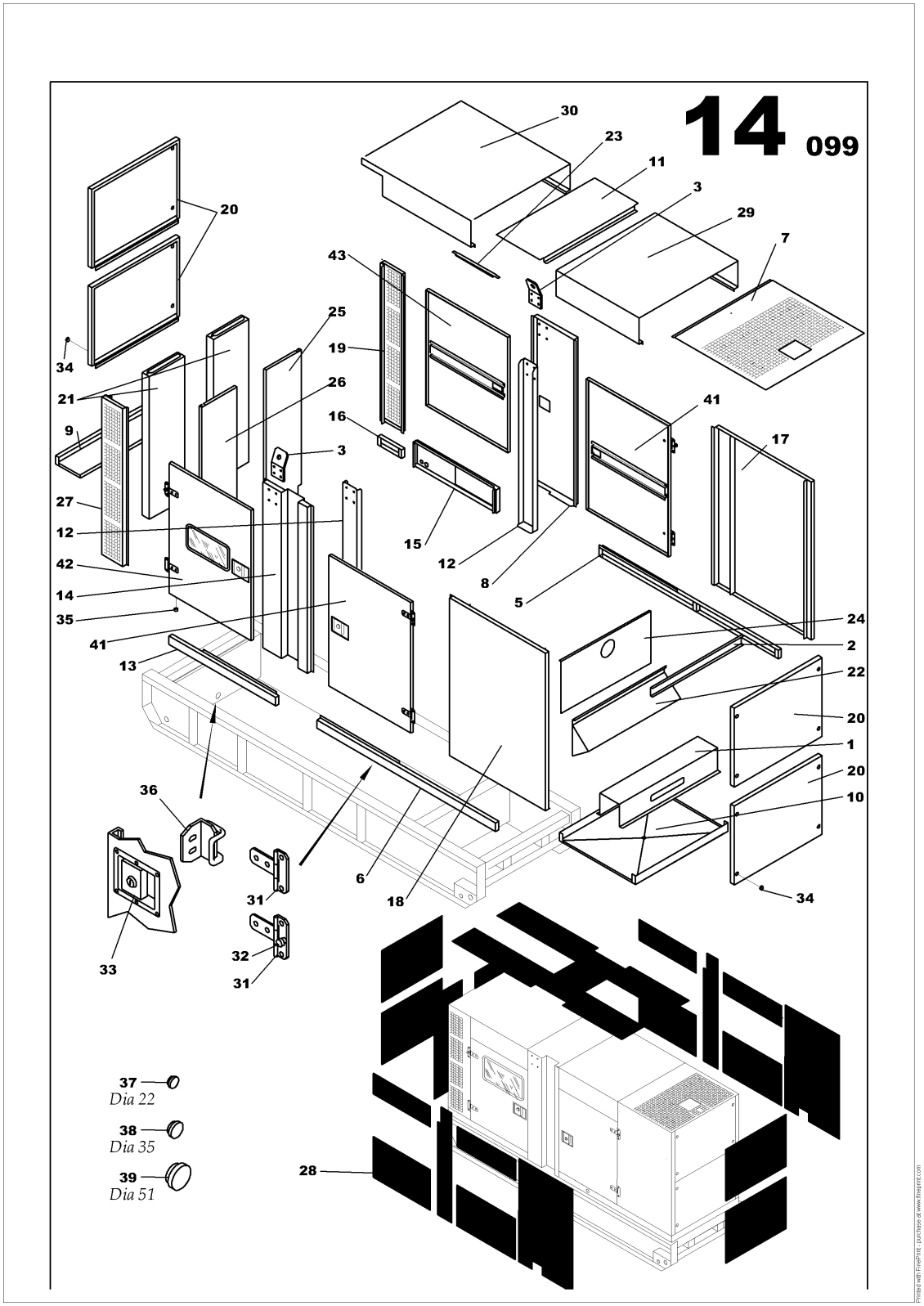

CANOPY M228 ASSEMBLY
17138868

Part numbers listed are only parts used in this model

Item	Part No.	Description	Qty	Un	From SN	To SN	Order PN	Page
38	17139585	PLUG D35	1	UN			17139585	
39	17139593	PLUG D51	1	UN			17139593	
41	17139627	CANOPY DOOR M228	2	UN			17139627	
42	17139635	CONTROL PANEL DOOR M228	1	UN			17139635	
43	17139650	CANOPY DOOR M228	1	UN			17139650	

CENTRAL LIFTING ARCH ASSEMBLY

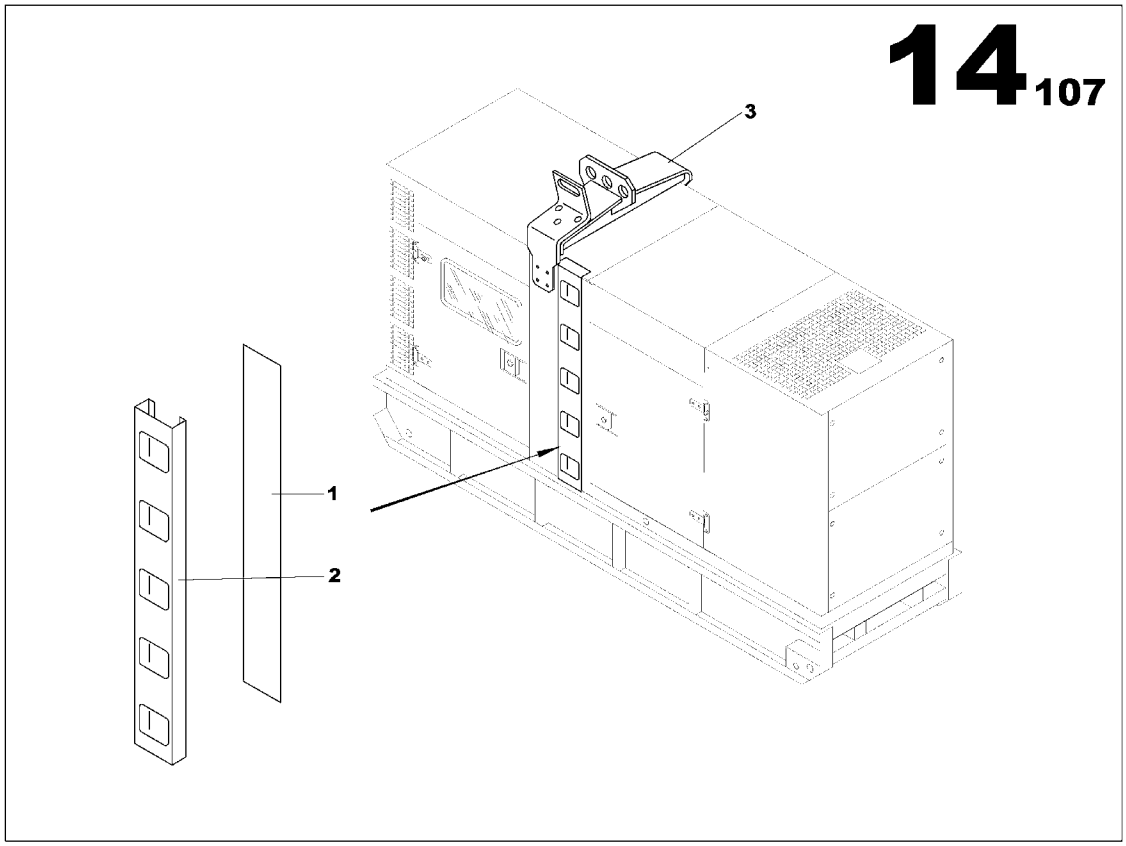

CENTRAL LIFTING ARCH ASSEMBLY
17139486

Part numbers listed are only parts used in this model

Item	Part No.	Description	Qty	Un	From SN	To SN	Order PN	Page
1	17138785	LADDER M227	1	UN			17138785	
2	17138793	LADDER PROTECTION PANEL M228/229	1	UN			17138793	
3	17139494	LIFTING FRAME ASSEMBLY	1	UN			17139494	133

LIFTING FRAME ASSEMBLY

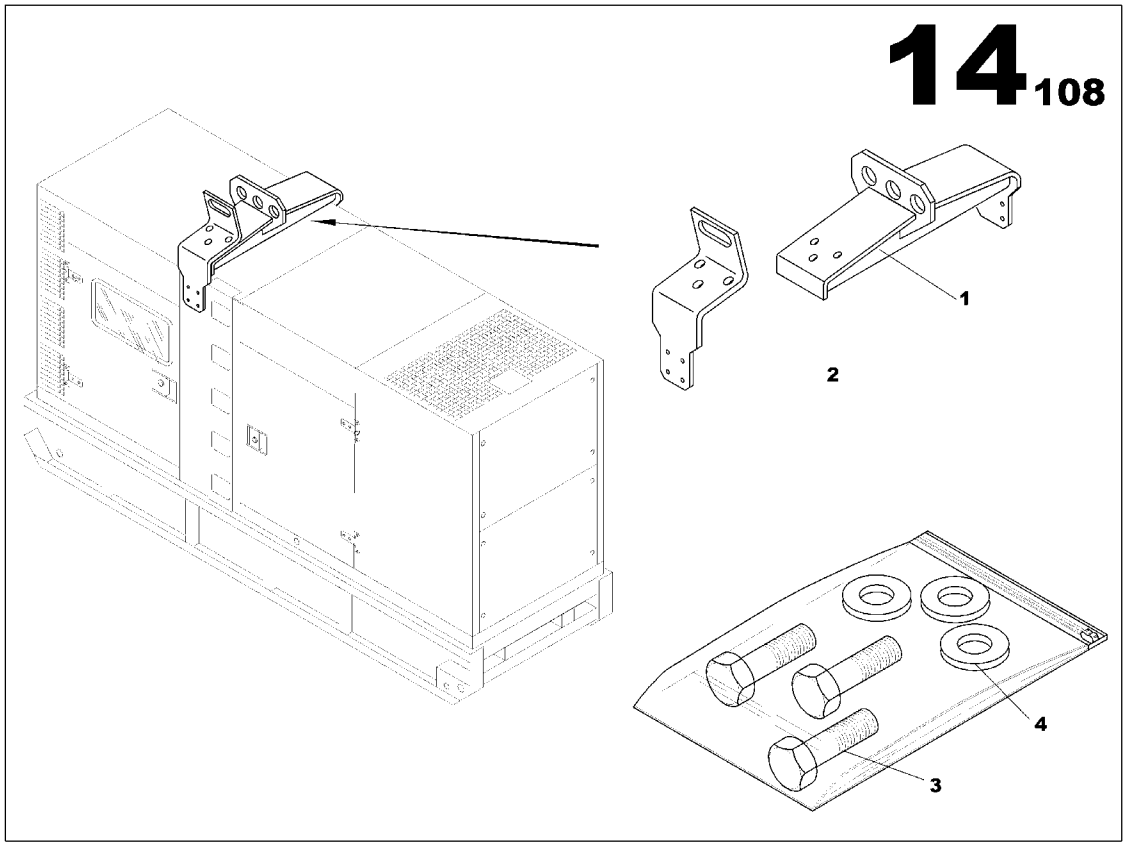

LIFTING FRAME ASSEMBLY
17139494

Part numbers listed are only parts used in this model

Item	Part No.	Description	Qty	Un	From SN	To SN	Order PN	Page
1	17139460	LIFTING FRAME 4500daN M228 CANOPY	1	UN			17139460	
2	17139528	LIFTING BRACKET M228	1	UN			17139528	
3	85632198	SCREW H M20x50	3	UN			85632198	
4	85632222	WASHER 20x40	3	UN			85632222	

EARTH ROD WITH CABLE CANOPY ASSEMBLY

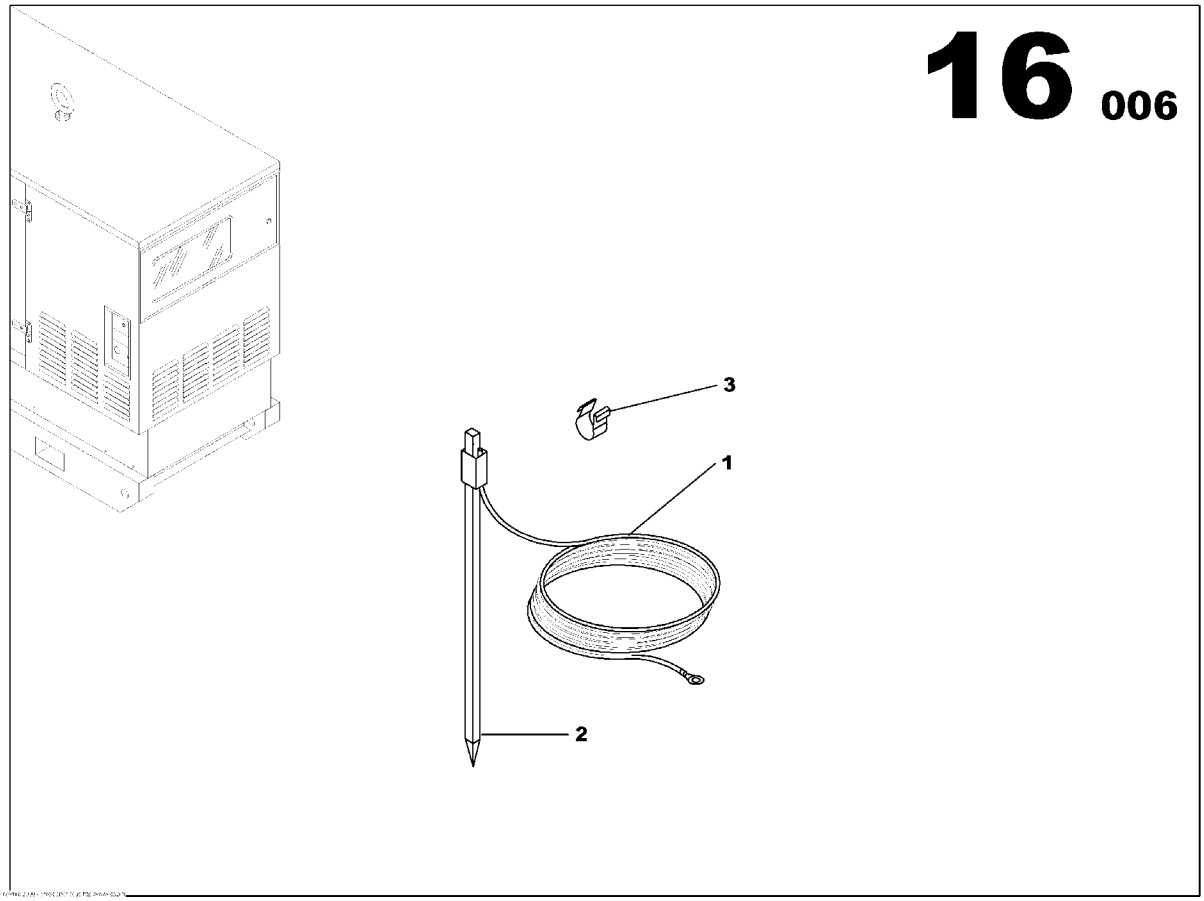

EARTH ROD WITH CABLE CANOPY ASSEMBLY
85407906

Part numbers listed are only parts used in this model

Item	Part No.	Description	Qty	Un	From SN	To SN	Order PN	Page
1	85408227	NEUTRAL/EARTH SYSTEM CABLE 25mm2 L10000 Gr/Ye	1	UN			85408227	
2	85408334	EARTH ROD L1000	1	UN			85408334	
3	85409191	CLIP-ON BRACKET	2	UN			85409191	

ELECTRICAL FUNCTION

Non illustré
Not illustrated

ELECTRICAL FUNCTION

Part numbers listed are only parts used in this model

Item	Part No.	Description	Qty	Un	From SN	To SN	Order PN	Page
1	17132424	PROTECTION PANEL OPTION	1	UN			17132424	139
2	17140195	AIPR ASSEMBLY	1	UN			17140195	141
3	85639599	DECALS TERMINAL BLOCK ASSEMBLY	1	UN			85639599	145
4		CONTROL PANEL FONCTION	1	UN				147
5		ELECTRIC SUPPLY FUNCTION	1	UN				183

PROTECTION PANEL OPTION

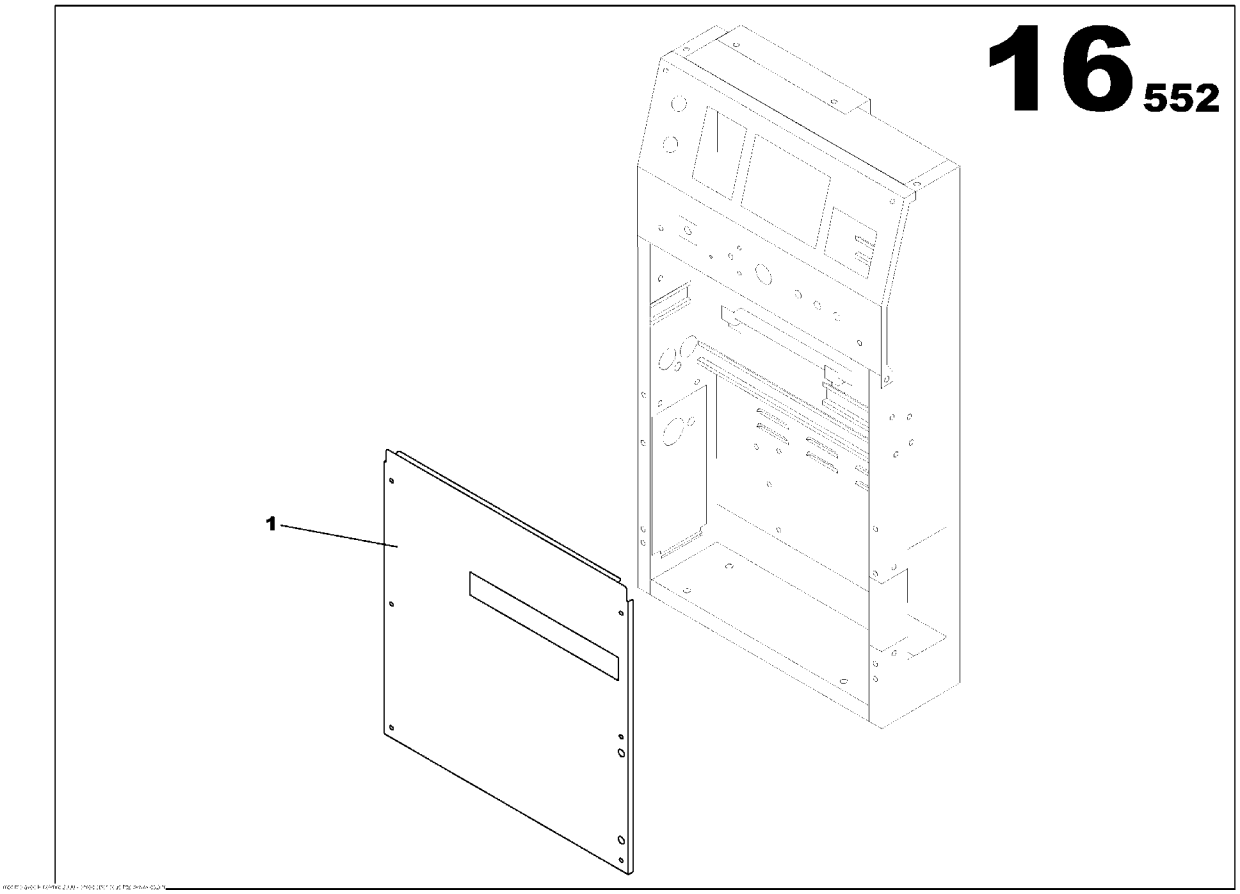

PROTECTION PANEL OPTION
17132424

Part numbers listed are only parts used in this model

Item	Part No.	Description	Qty	Un	From SN	To SN	Order PN	Page
1	17132200	S4500 CLOSURE PANEL	1	UN			17132200	

AIPR ASSEMBLY

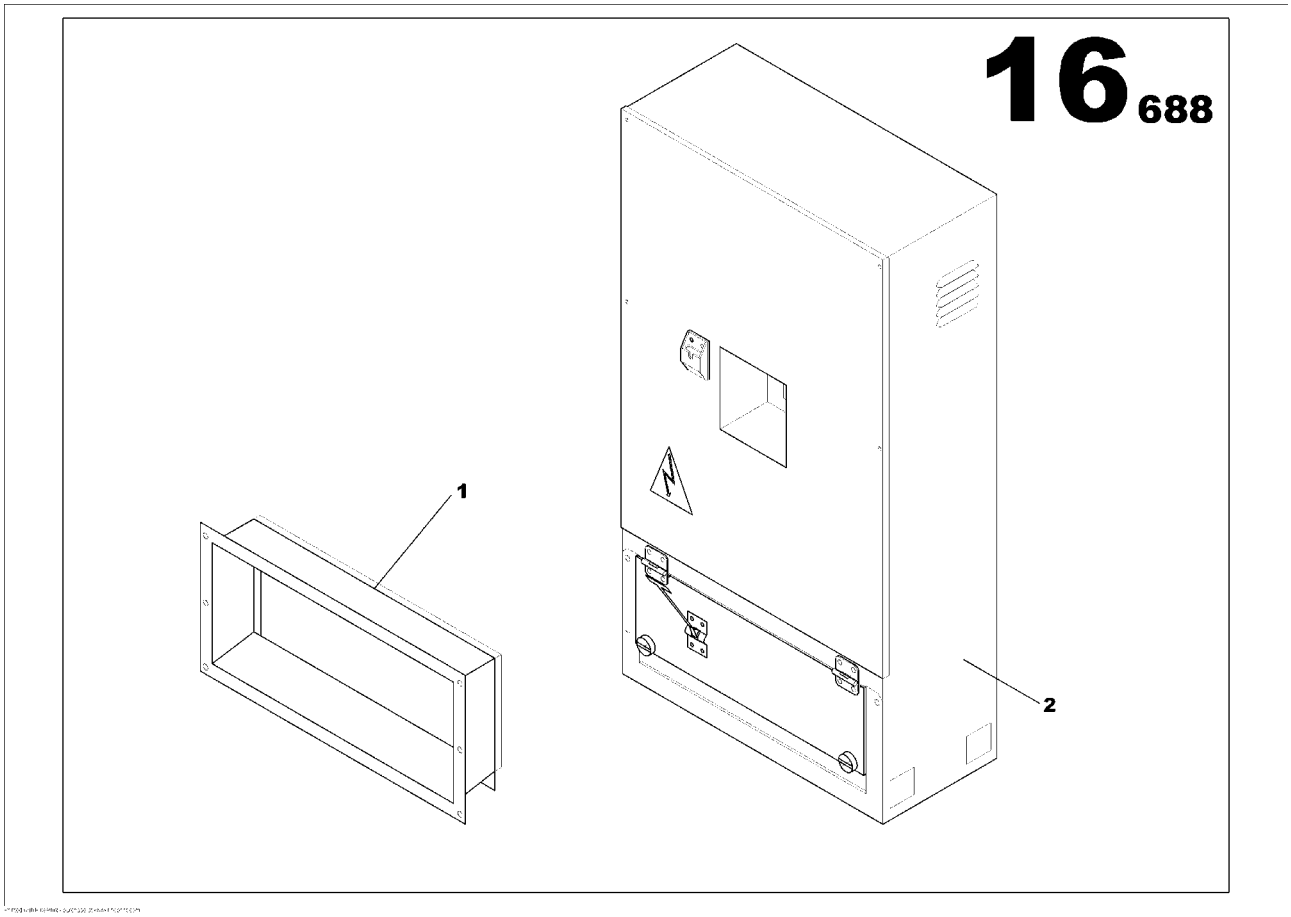

AIPR ASSEMBLY
17140195

Part numbers listed are only parts used in this model

Item	Part No.	Description	Qty	Un	From SN	To SN	Order PN	Page
1	17138850	AIPR ACCES PANEL	1	UN			17138850	
2	17140187	AIPR ASSEMBLY	1	UN			17140187	143

AIPR ASSEMBLY

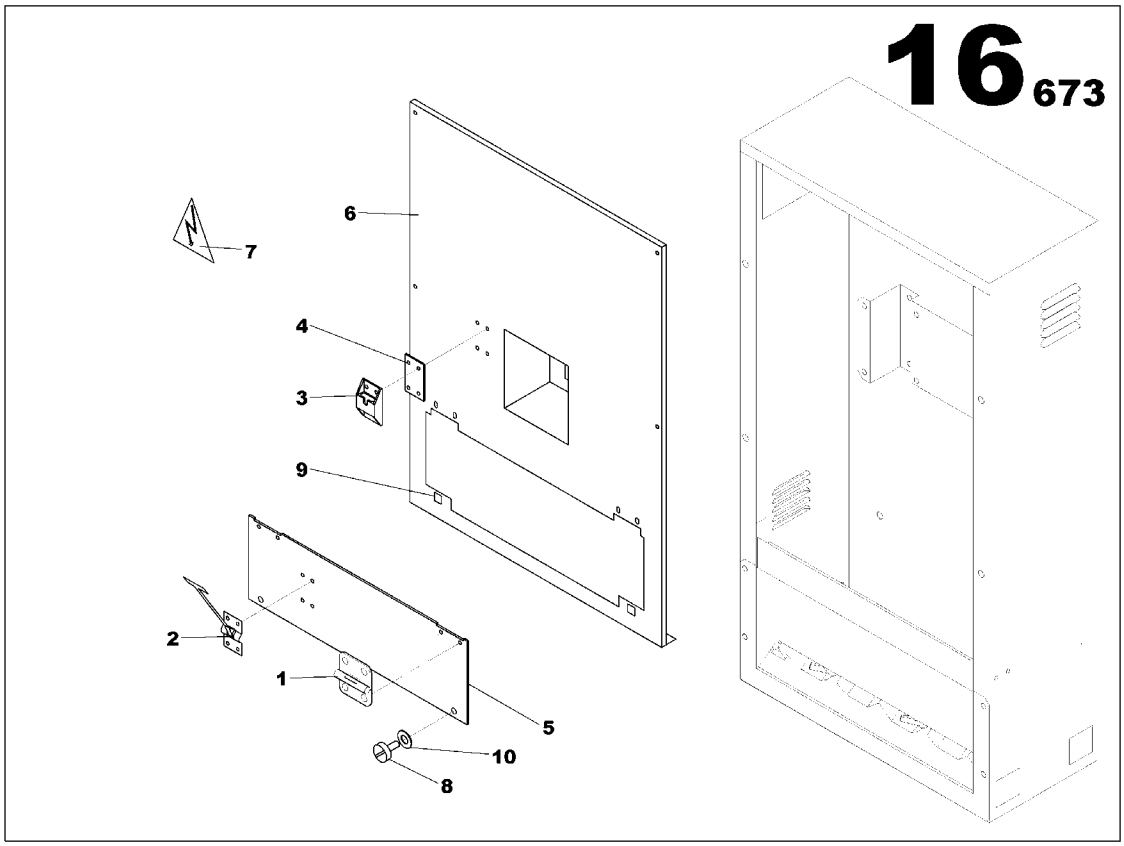

AIPR ASSEMBLY
17140187

Part numbers listed are only parts used in this model

Item	Part No.	Description	Qty	Un	From SN	To SN	Order PN	Page
1	85406130	DOOR HINGE	2	UN			85406130	
2	17139544	INOXIDABLE HOOK 90mm	1	UN			17139544	
3	17139551	DOOR STOP	1	UN			17139551	
4	17139569	BASE PLATE PAD FOR PLATE	1	UN			17139569	
5	17139981	DOOR PLEXI AIPR	1	UN			17139981	
6	17140179	AIPR PANEL	1	UN			17140179	
7	85409175	STICKER ELECTRIC DANGER SYMBOL	1	UN			85409175	
8	85409225	1/4 TURN SCREW D9 *-Order 31801021601NE*	2	UN			85409225	
9	85409233	CAPTIVE NUT FOR 1/4 TURN BOLT *-Order 31801021601NE*	2	UN			85409233	
10	85409241	WASHER FOR 1/4 TURN FASTENER *-Order 31801021601NE*	2	UN			85409241	

DECALS TERMINAL BLOCK ASSEMBLY

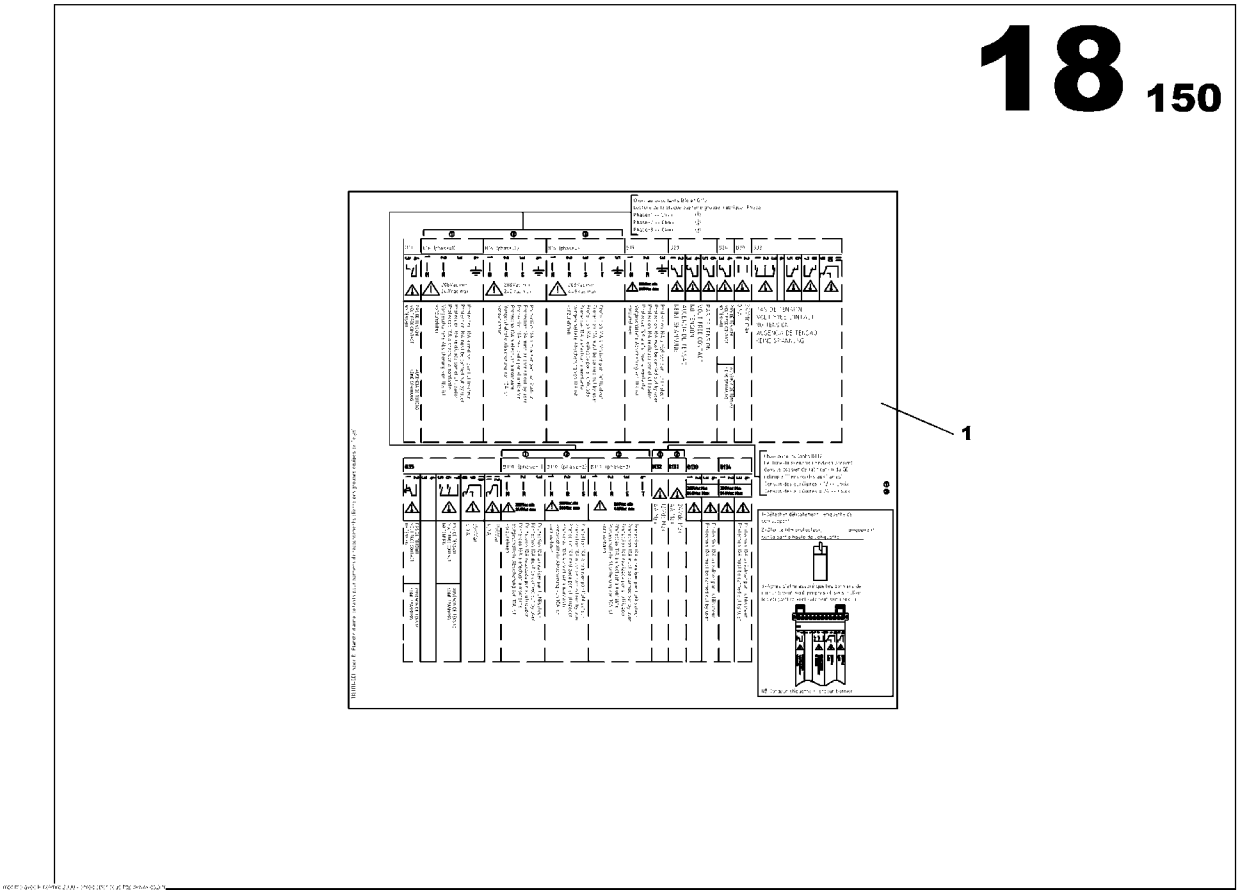

DECALS TERMINAL BLOCK ASSEMBLY
85639599

Part numbers listed are only parts used in this model

Item	Part No.	Description	Qty	Un	From SN	To SN	Order PN	Page
1	85639573	STICKER TERMINAL BLOCK	1	UN	03012825		85639573	

CONTROL PANEL FUNCTION

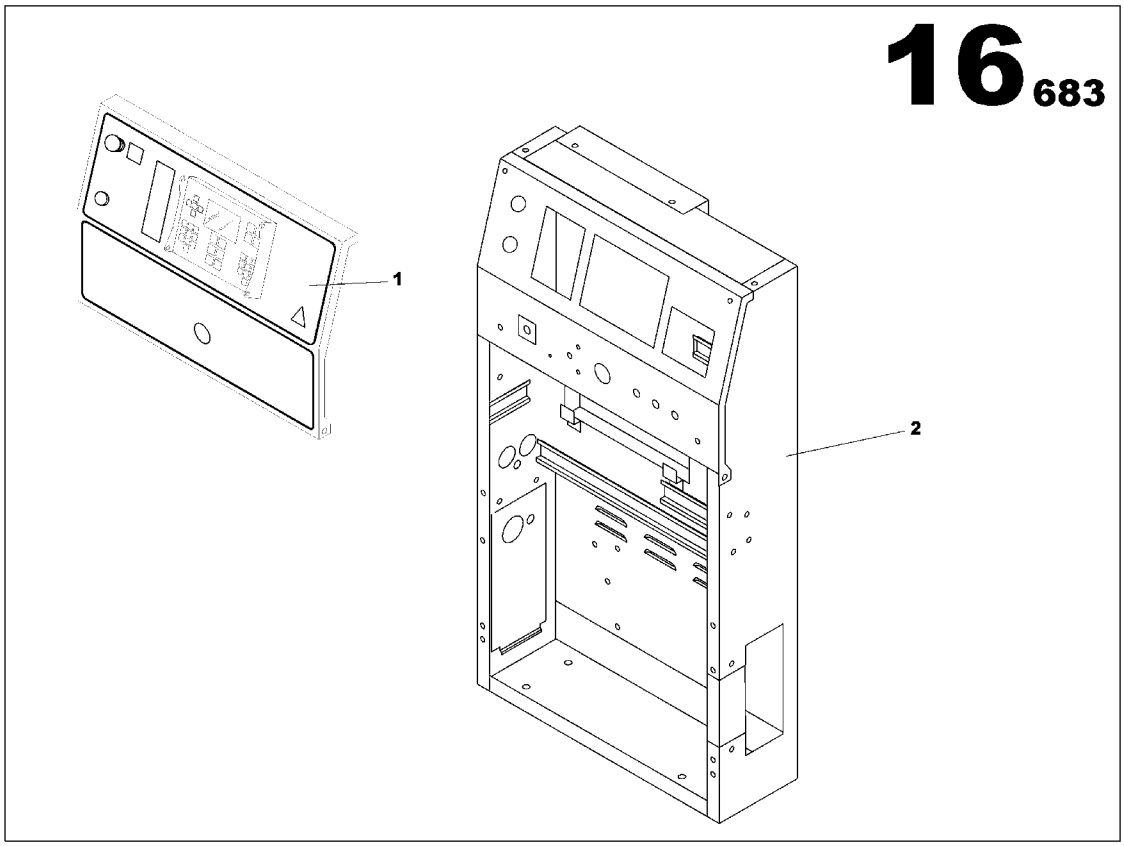

CONTROL PANEL FUNCTION

Part numbers listed are only parts used in this model

Item	Part No.	Description	Qty	Un	From SN	To SN	Order PN	Page
1	85411569	INTELLISYS OPTION CB CARD	1	UN			85411569	149
2	17133166	SPEED POTENTIOMETER OPTION	1	UN			17133166	155
3	17133174	ELECTRIC PACK OPTION	1	UN			17133174	157
4	17140740	EARTH LEAKAGE OPTION	1	UN			17140740	
5	17140757	INTELLISYS OPTION LOW FUEL LEVEL	1	UN			17140757	
6	17140781	S4500 DASHBOARD OPTION	1	UN			17140781	161
7		WIRING LOOM FUNCTION	1	UN				177

INTELLISYS OPTION CB CARD

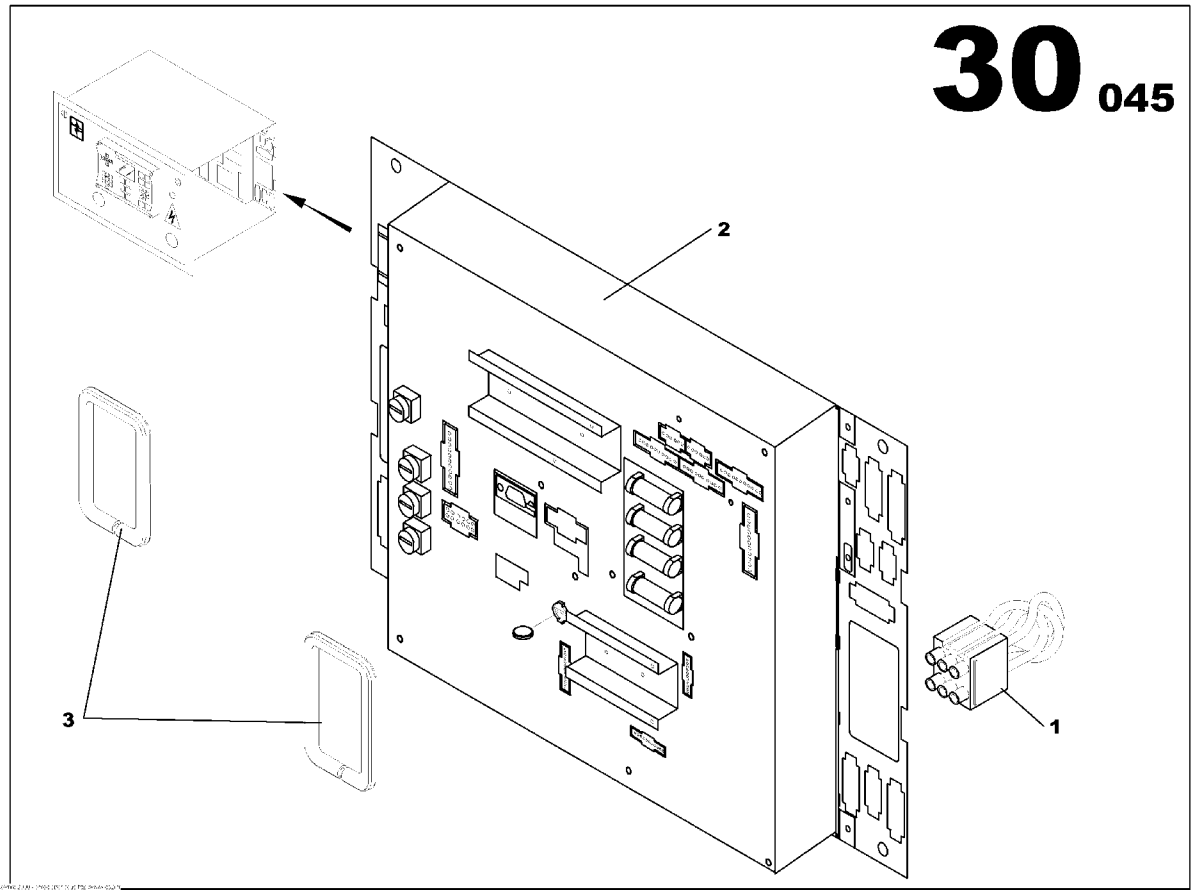

INTELLISYS OPTION CB CARD
85411569

Part numbers listed are only parts used in this model

Item	Part No.	Description	Qty	Un	From SN	To SN	Order PN	Page
1	85504033	WIRING LOOM C35S	1	UN			85504033	
2	85627198	INTELLISYS CARD CB12 *-1,06F*	1	UN	02010540	04000933	85636991	151
2	85636991	INTELLISYS CARD CB12 *-1.10G*	1	UN	04000934		85636991	153
3	85630515	LINEAR SEAL	0.2	ML			85630515	

INTELLISYS CARD CB12

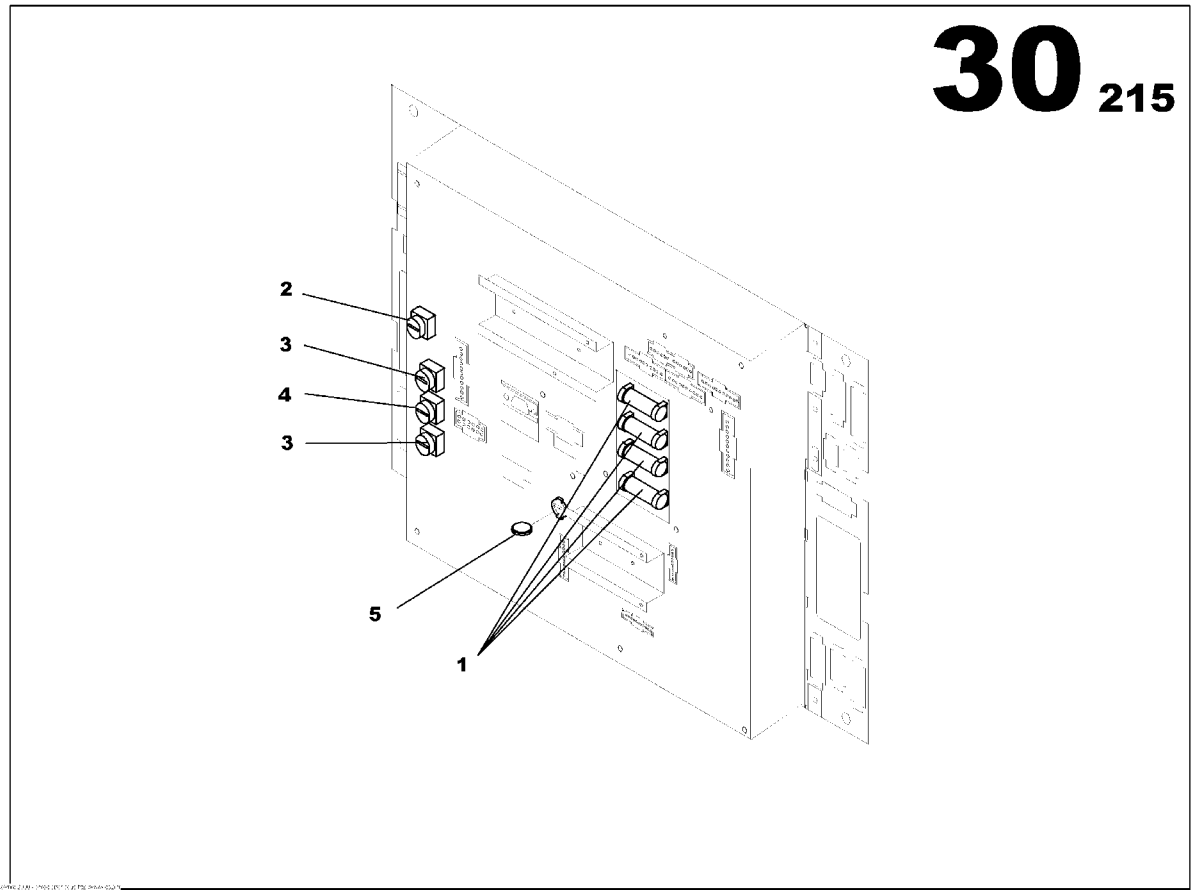

INTELLISYS CARD CB12

85627198

Part numbers listed are only parts used in this model

Item	Part No.	Description	Qty	Un	From SN	To SN	Order PN	Page
1	85426112	FUSE CYLINDRICAL 12.5A	4	UN			85426112	
2	85426120	FUSE CYLINDRICAL 10A	1	UN			85426120	
3	85426138	FUSE CYLINDRICAL 1A	2	UN			85426138	
4	85426146	FUSE CYLINDRICAL 2,5A	1	UN			85426146	
5	85505154	CR2032 CELL	1	UN			85505154	

INTELLISYS CARD CB12

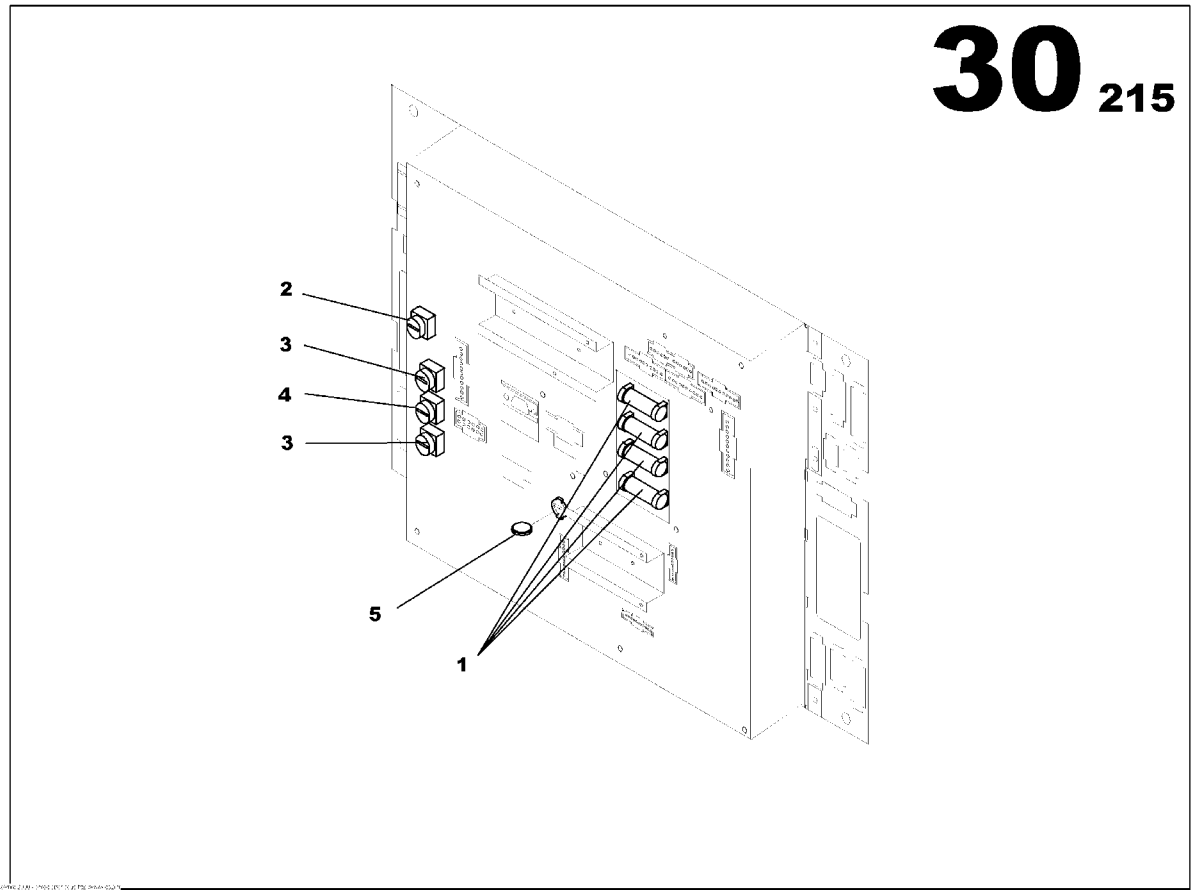

INTELLISYS CARD CB12

85636991

Part numbers listed are only parts used in this model

Item	Part No.	Description	Qty	Un	From SN	To SN	Order PN	Page
1	85426112	FUSE CYLINDRICAL 12.5A	4	UN			85426112	
2	85426120	FUSE CYLINDRICAL 10A	1	UN			85426120	
3	85426138	FUSE CYLINDRICAL 1A	2	UN			85426138	
4	85426146	FUSE CYLINDRICAL 2,5A	1	UN			85426146	
5	85505154	CR2032 CELL	1	UN			85505154	

SPEED POTENTIOMETER OPTION

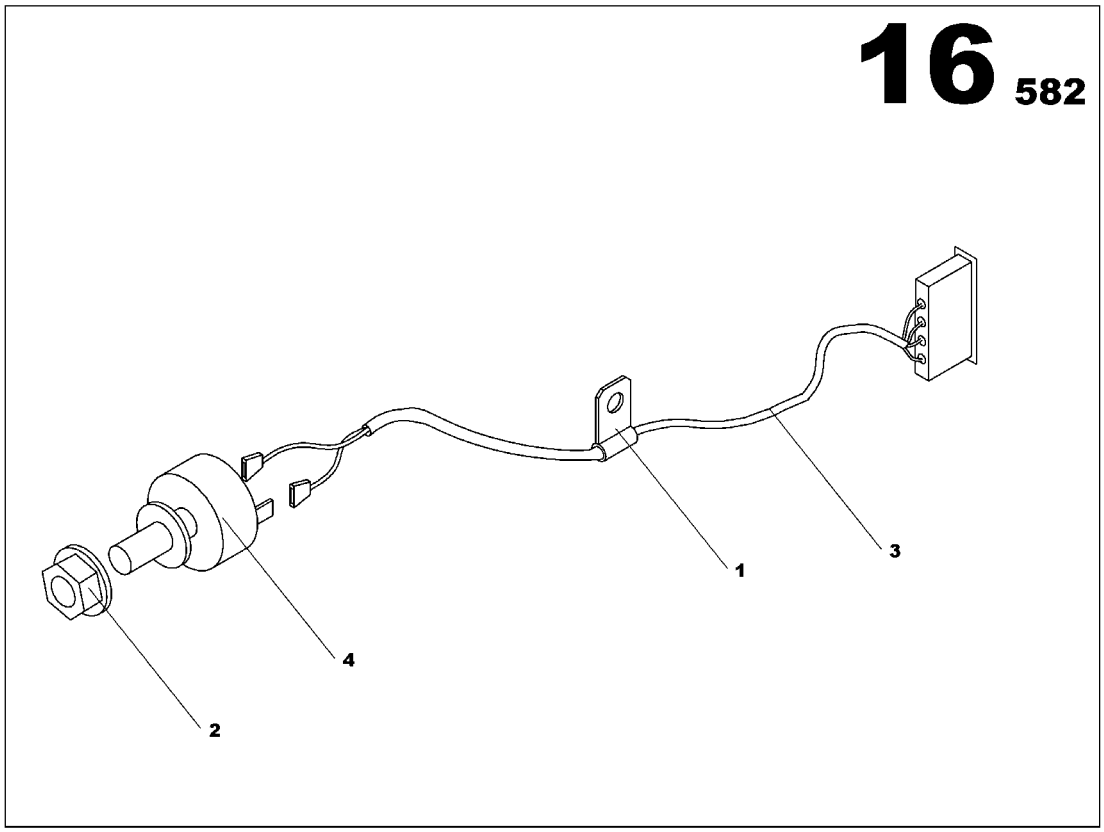

SPEED POTENTIOMETER OPTION
17133166

Part numbers listed are only parts used in this model

Item	Part No.	Description	Qty	Un	From SN	To SN	Order PN	Page
1	85504207	CLAMP D4.7	1	UN			85504207	
2	85504215	LOCK AXE SYSTEM	1	UN			85504215	
3	85503993	WIRING LOOM C105 L540	1	UN			85503993	
4	85504223	POTENTIOMETER 4.7kOHMS	1	UN			85504223	

ELECTRIC PACK OPTION

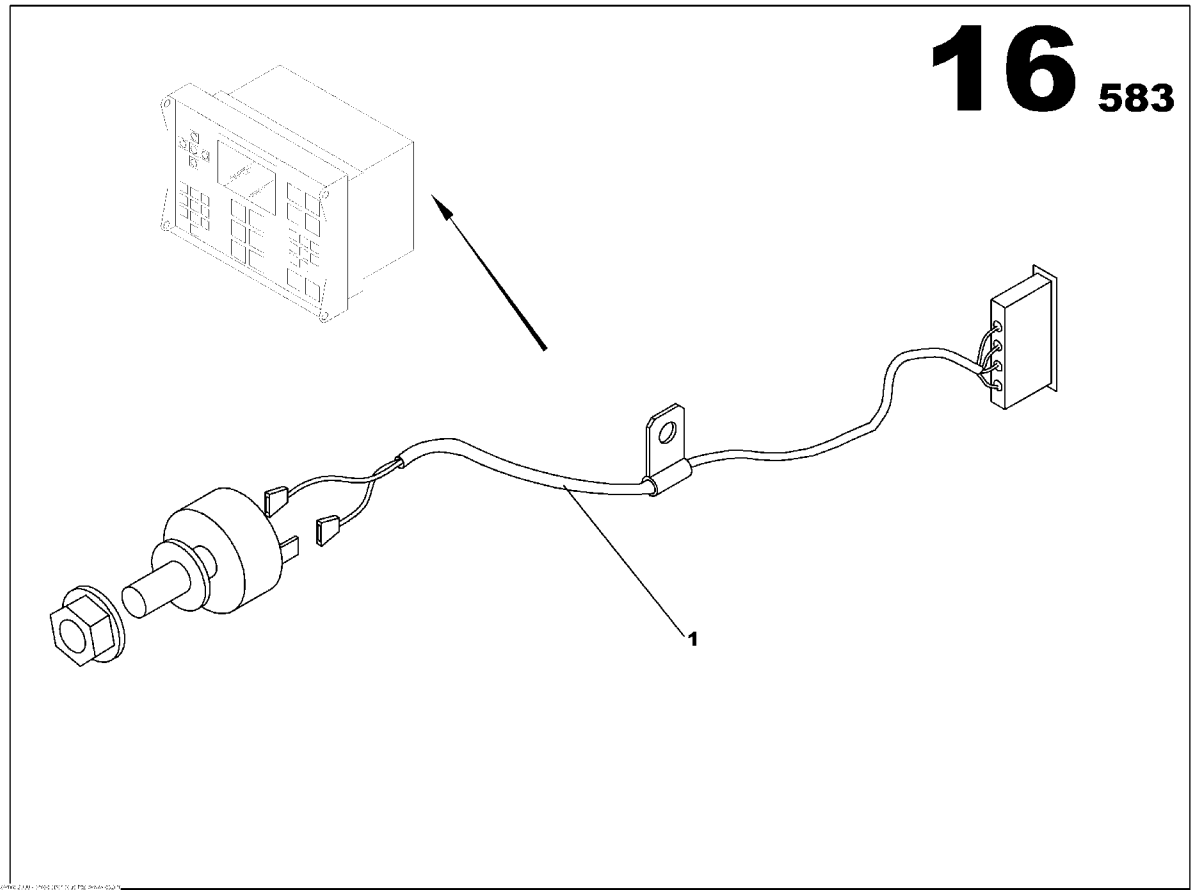

ELECTRIC PACK OPTION
17133174

Part numbers listed are only parts used in this model

Item	Part No.	Description	Qty	Un	From SN	To SN	Order PN	Page
1	85636140	VOLTAGE POTENTIOMETER OPTION	1	UN			85636140	159

VOLTAGE POTENTIOMETER OPTION

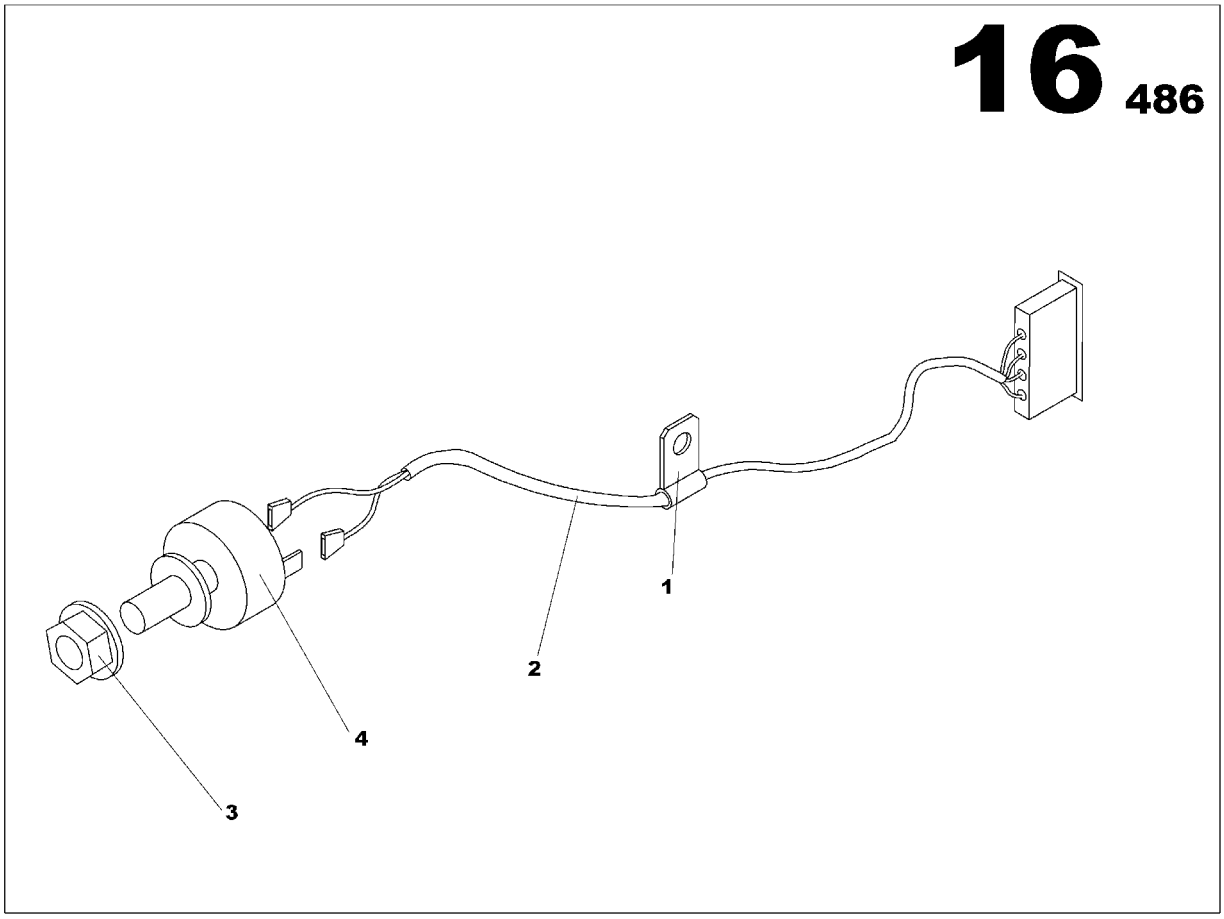

VOLTAGE POTENTIOMETER OPTION
85636140

Part numbers listed are only parts used in this model

Item	Part No.	Description	Qty	Un	From SN	To SN	Order PN	Page
1	85504207	CLAMP D4.7	1	UN			85504207	
2	85636959	INTELLISYS WIRING LOOM 031	1	UN			85636959	
3	85504215	LOCK AXE SYSTEM	1	UN			85504215	
4	85504264	POTENTIOMETER 1kOHMS	1	UN			85504264	

S4500 DASHBOARD OPTION

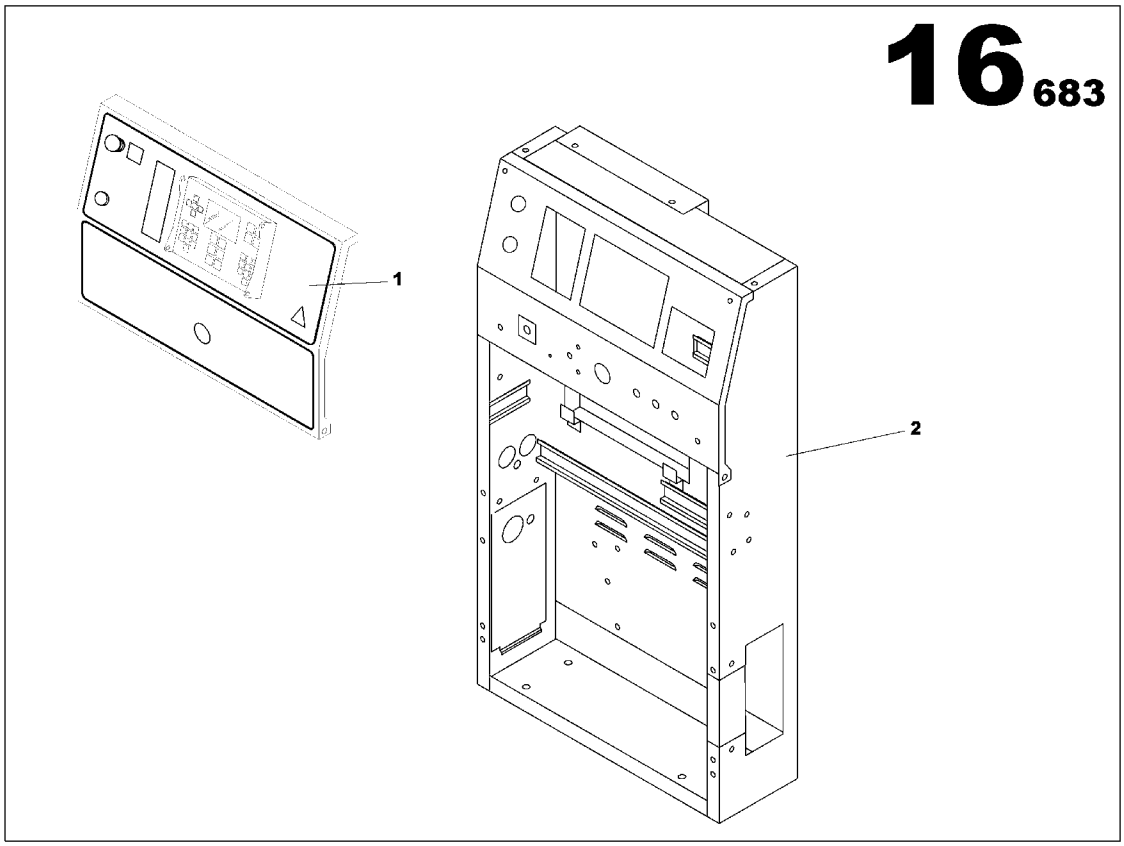

S4500 DASHBOARD OPTION
17140781

Part numbers listed are only parts used in this model

Item	Part No.	Description	Qty	Un	From SN	To SN	Order PN	Page
1	85639565	PLASTIQUE PLATE L548xh310	1	UN			85639565	
2	85638336	CONTROL PANEL SHEET METAL ASSEMBLY	1	UN			85638336	163
3	17140765	CONTROL PANEL ASSEMBLY	1	UN			17140765	165

CONTROL PANEL SHEET METAL ASSEMBLY

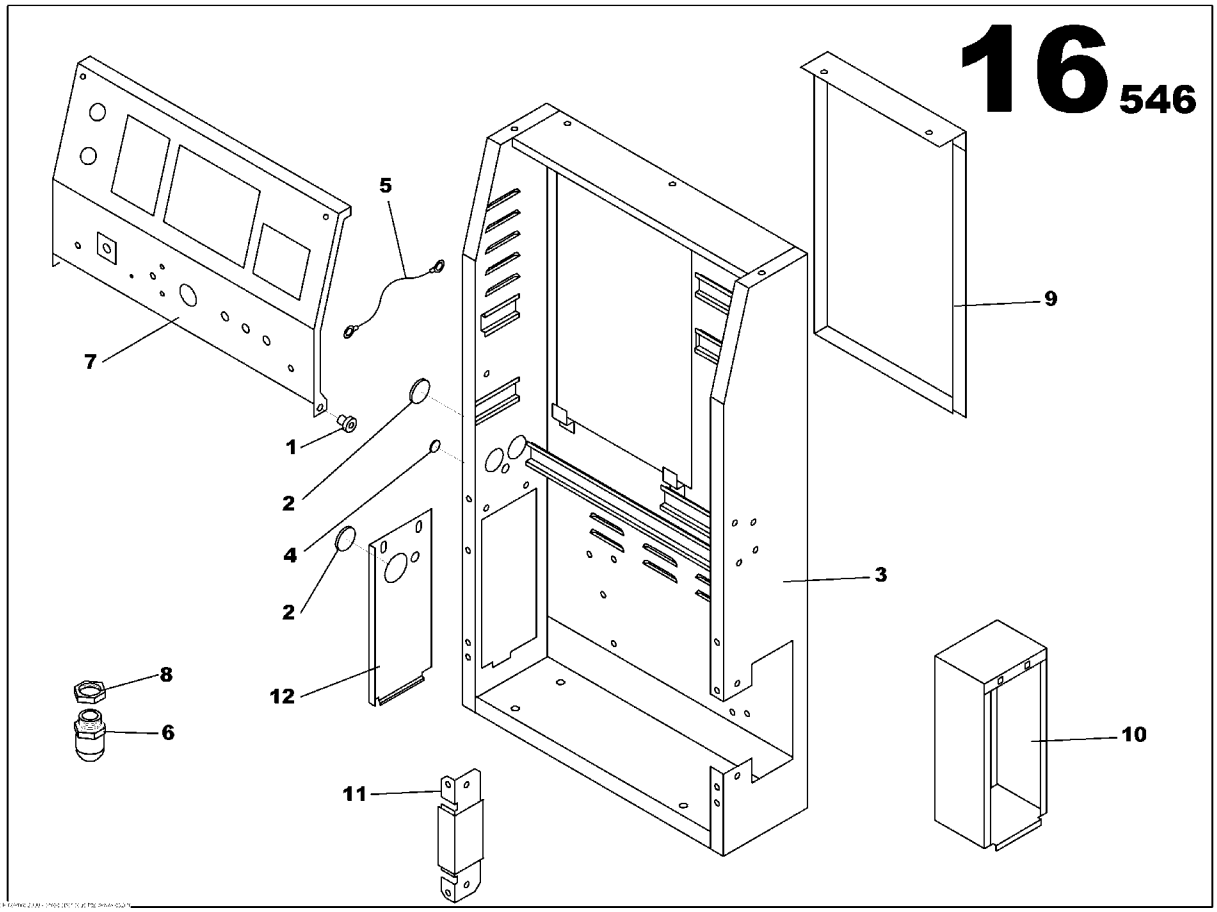

CONTROL PANEL SHEET METAL ASSEMBLY
85638336

Part numbers listed are only parts used in this model

Item	Part No.	Description	Qty	Un	From SN	To SN	Order PN	Page
1	85636660	SLEAVE BEARING	2	UN			85636660	
2	85408391	RUBBER GROMMET D47	3	UN			85408391	
3	85638294	CONTROL PANEL S4500 HOUSING	1	UN			85638294	
4	85636694	RUBBER GROMMET D15	1	UN			85636694	
5	85634582	COVER STOP CONTROL PANEL S3500	2	UN			85634582	
6	85635894	GLAND NUT PG13	1	UN			85635894	
7	85638310	CONTROL PANEL BRACKET	1	UN			85638310	
8	85635902	PG13 NUT	1	UN			85635902	
9	85634517	REAR CLOSURE PANEL S3500 CONTROL PANEL	1	UN			85634517	
10	85638492	SPACER	1	UN			85638492	
11	85638328	SUPPORT PANEL S4500 CONTROL PANEL	1	UN			85638328	
12	85638476	CABLE OUTLET PLATE	1	UN			85638476	

CONTROL PANEL ASSEMBLY

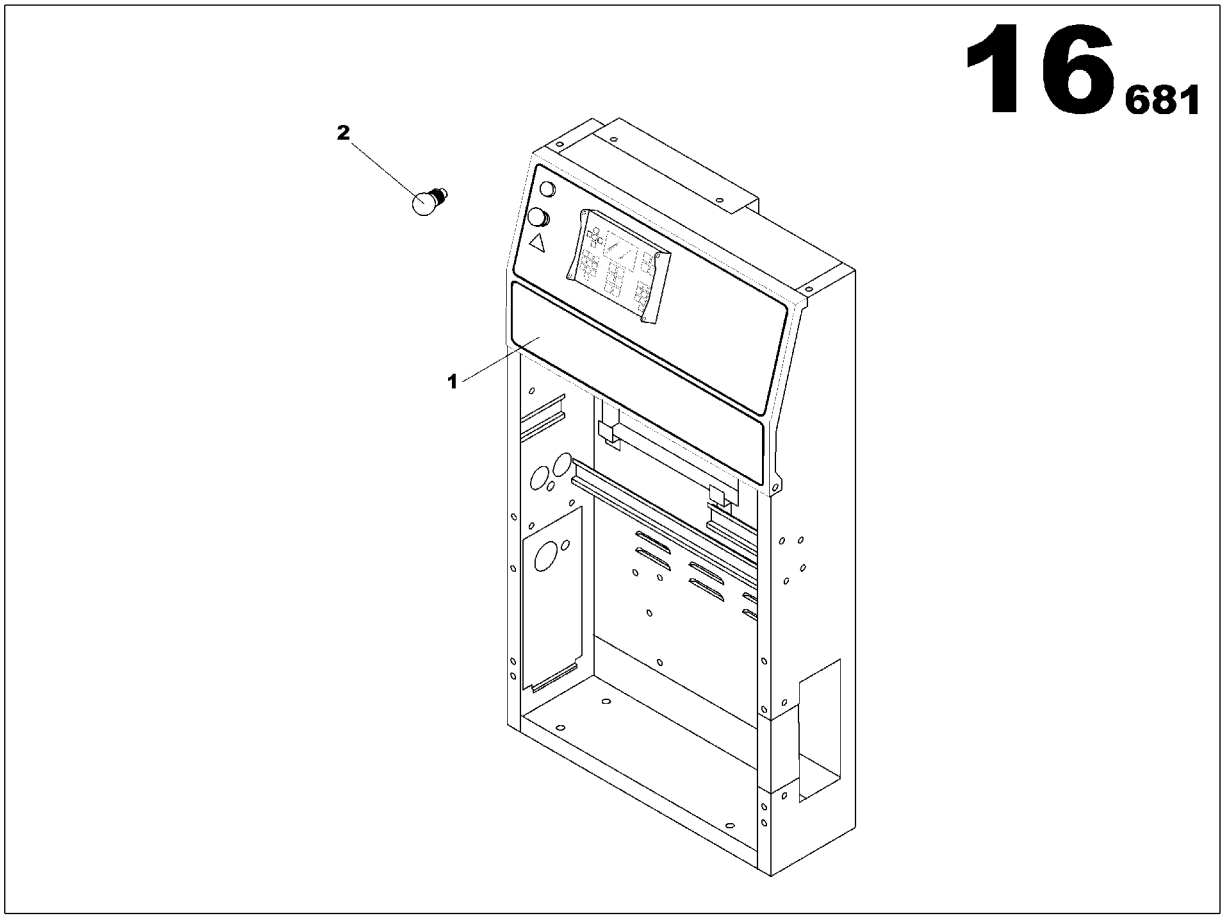

CONTROL PANEL ASSEMBLY
17140765

Part numbers listed are only parts used in this model

Item	Part No.	Description	Qty	Un	From SN	To SN	Order PN	Page
1	85639292	CONTROL PANEL ASSEMBLY	1	UN			85639292	167
2	85504090	LAMP 30V BA9S TYPE	1	UN			85504090	

CONTROL PANEL ASSEMBLY

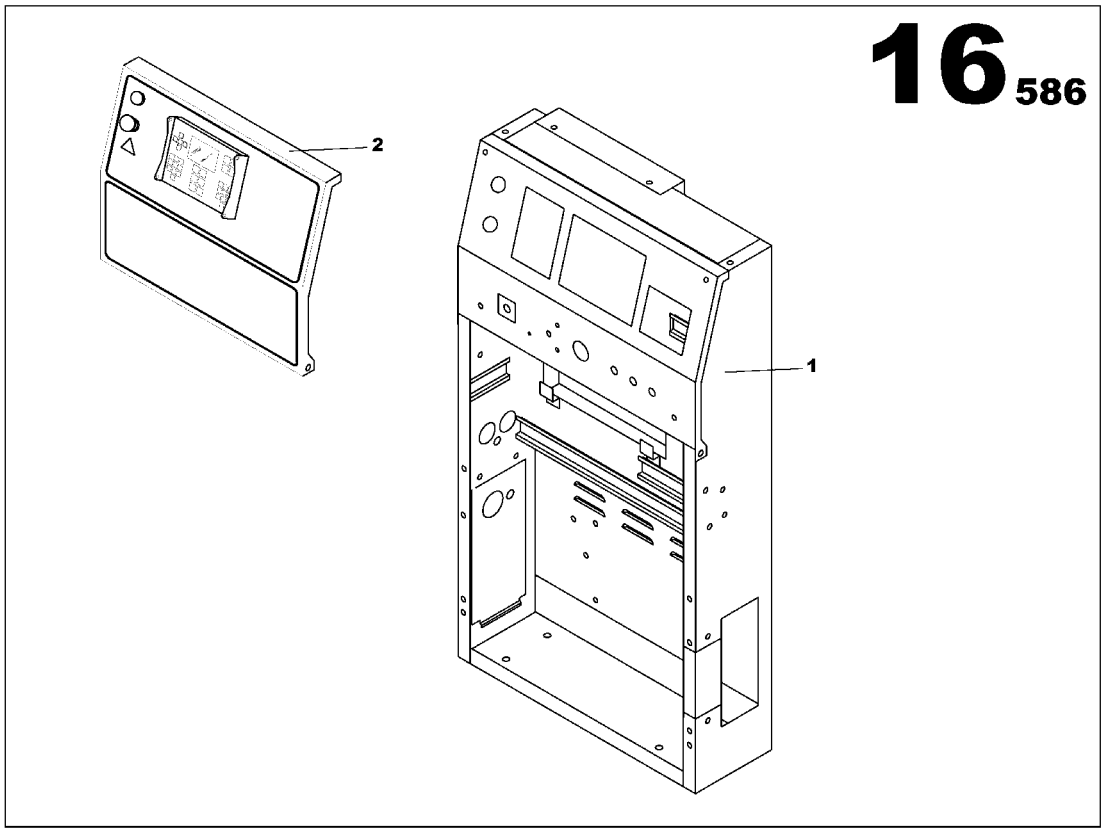

CONTROL PANEL ASSEMBLY
85639292

Part numbers listed are only parts used in this model

Item	Part No.	Description	Qty	Un	From SN	To SN	Order PN	Page
1	17135724	S4500 DASHBOARD OPTION	1	UN			17135724	169
2	85639839	BASIC S4500 FRONT FACE	1	UN			85639839	173

S4500 DASHBOARD OPTION

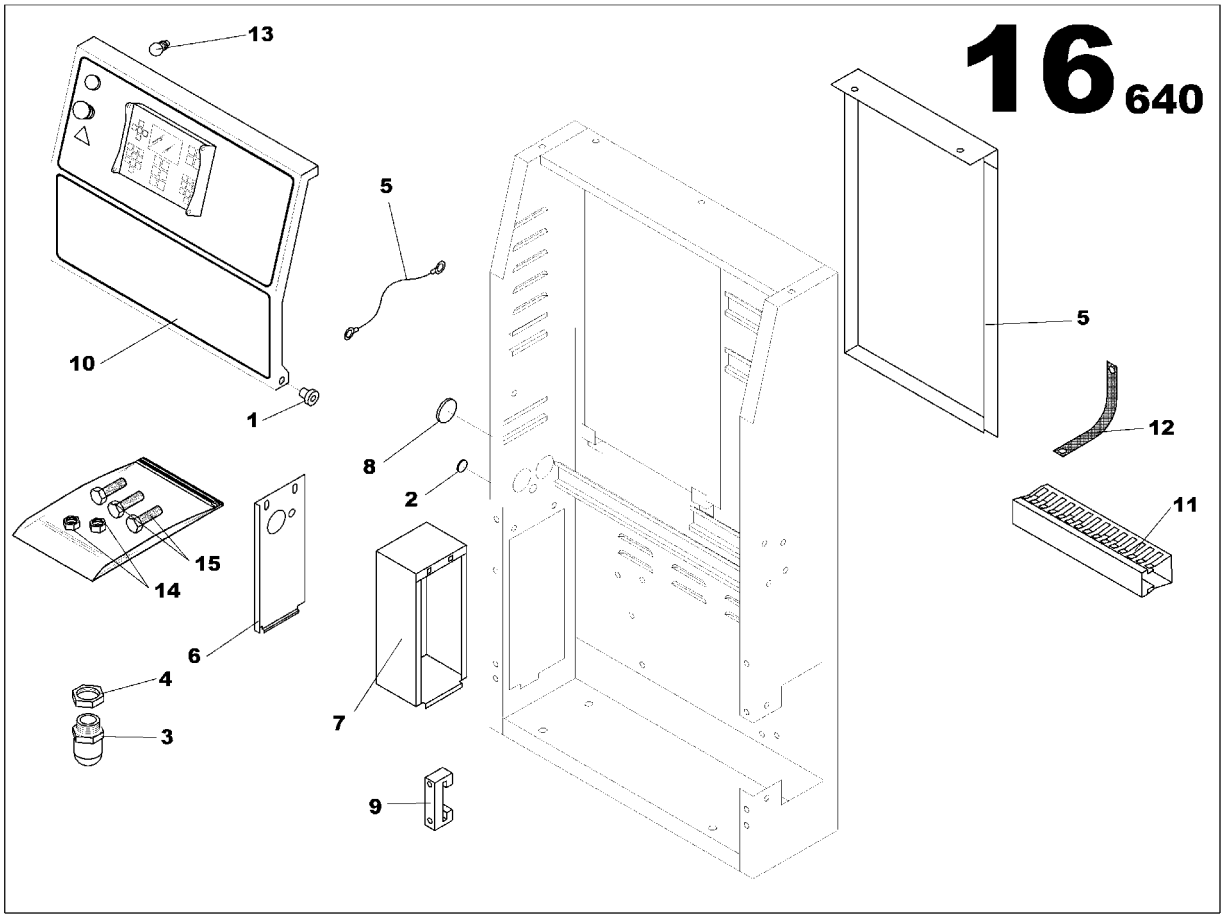

S4500 DASHBOARD OPTION
17135724

Part numbers listed are only parts used in this model

Item	Part No.	Description	Qty	Un	From SN	To SN	Order PN	Page
1	85636660	SLEAVE BEARING	2	UN			85636660	
2	17135476	PLUG	1	UN			17135476	
3	85408615	GLAND NUT PG13	1	UN			85408615	
4	85635902	PG13 NUT	1	UN			85635902	
5	85634517	REAR CLOSURE PANEL S3500 CONTROL PANEL	1	UN			85634517	
6	85638476	CABLE OUTLET PLATE	1	UN			85638476	
7	85638492	SPACER	1	UN			85638492	
8	85408599	RUBBER GROMMET D37	1	UN			85408599	
9	85408854	STOP	1	UN			85408854	
10	85639821	BASIC S4500 FRONT FACE	1	UN			85639821	171
11	17135484	CONNECTING TERMINAL	1	UN			17135484	
12	17135690	GROUND WIRES 16mm2 600mm	1	UN			17135690	
13	85402519	LAMP 12V BA9S TYPE	1	UN			85402519	
14	17130766	NUT M6	2	UN			17130766	
15	85636389	SCREW H M6x16	10	UN			85636389	

BASIC S4500 FRONT FACE

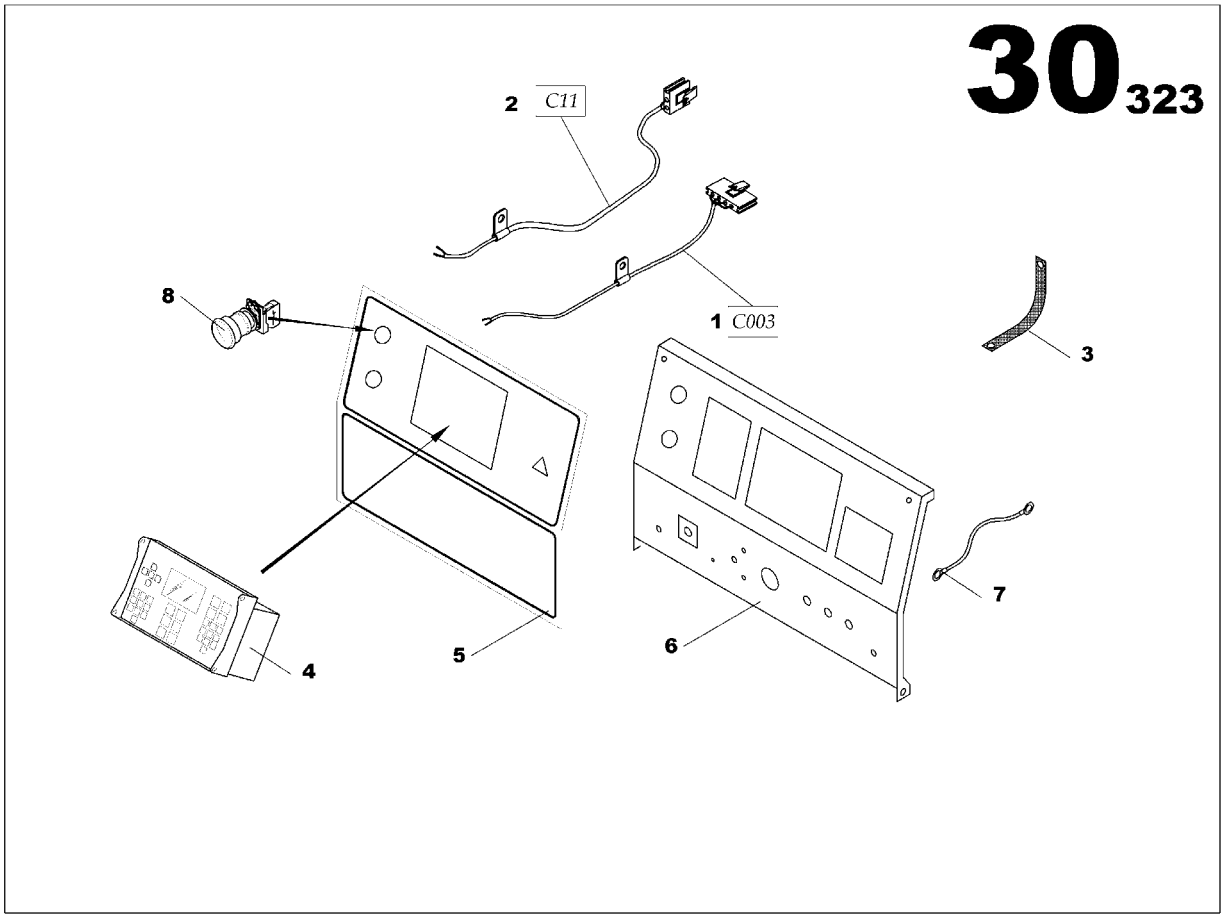

BASIC S4500 FRONT FACE
85639821

Part numbers listed are only parts used in this model

Item	Part No.	Description	Qty	Un	From SN	To SN	Order PN	Page
1	85504017	INTELLISYS WIRING LOOM 003	1	UN			85504017	
2	17135708	WIRING LOOM C11 L660	1	UN			17135708	
3	85504199	GROUND WIRE 10mm2 L :200mm	1	UN			85504199	
4	17135716	INTELLISYS DISPLAY *-SDMO PLATE SOFT 1.3*	1	UN			17135716	
5	17135732	PLASTIC PLATE L548xh310	1	UN			17135732	
6	85638310	CONTROL PANEL BRACKET	1	UN			85638310	
7	85634582	COVER STOP CONTROL PANEL S3500	2	UN			85634582	
8	85631422	EMERGENCY STOP BUTTON	1	UN			85631422	

BASIC S4500 FRONT FACE

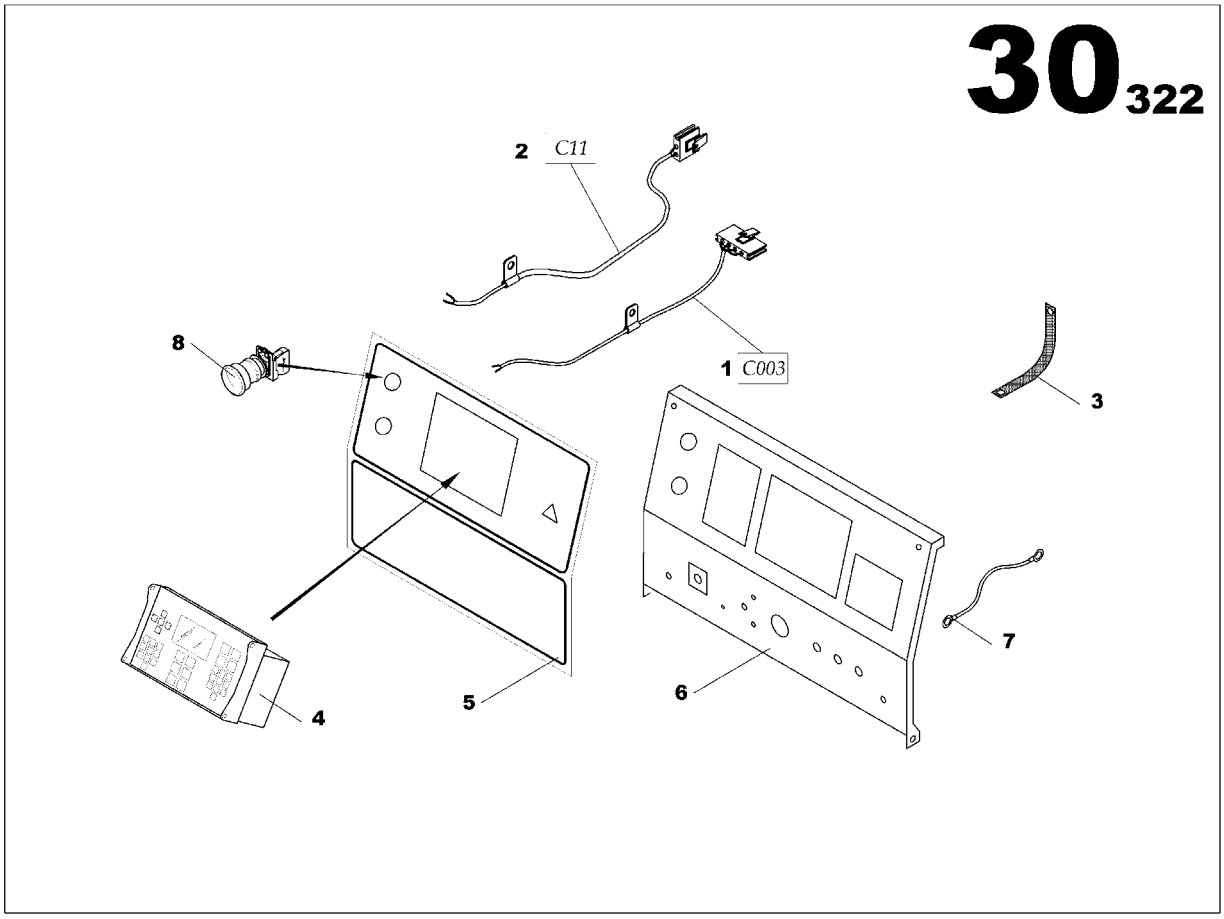

BASIC S4500 FRONT FACE
85639839

Part numbers listed are only parts used in this model

Item	Part No.	Description	Qty	Un	From SN	To SN	Order PN	Page
1	85504017	INTELLISYS WIRING LOOM 003	1	UN			85504017	
2	17135708	WIRING LOOM C11 L660	1	UN			17135708	
3	85504199	GROUND WIRE 10mm2 L :200mm	1	UN			85504199	
4	17133687	INTELLISYSTM DISPLAY *-IR PLATE SOFT 1.3*	1	UN			17133687	175
5	17135740	PLASTIC PLATE L548xh310	1	UN			17135740	
6	85638310	CONTROL PANEL BRACKET	1	UN			85638310	
7	85634582	COVER STOP CONTROL PANEL S3500	2	UN			85634582	
8	85631422	EMERGENCY STOP BUTTON	1	UN			85631422	

INTELLISYS tm DISPLAY

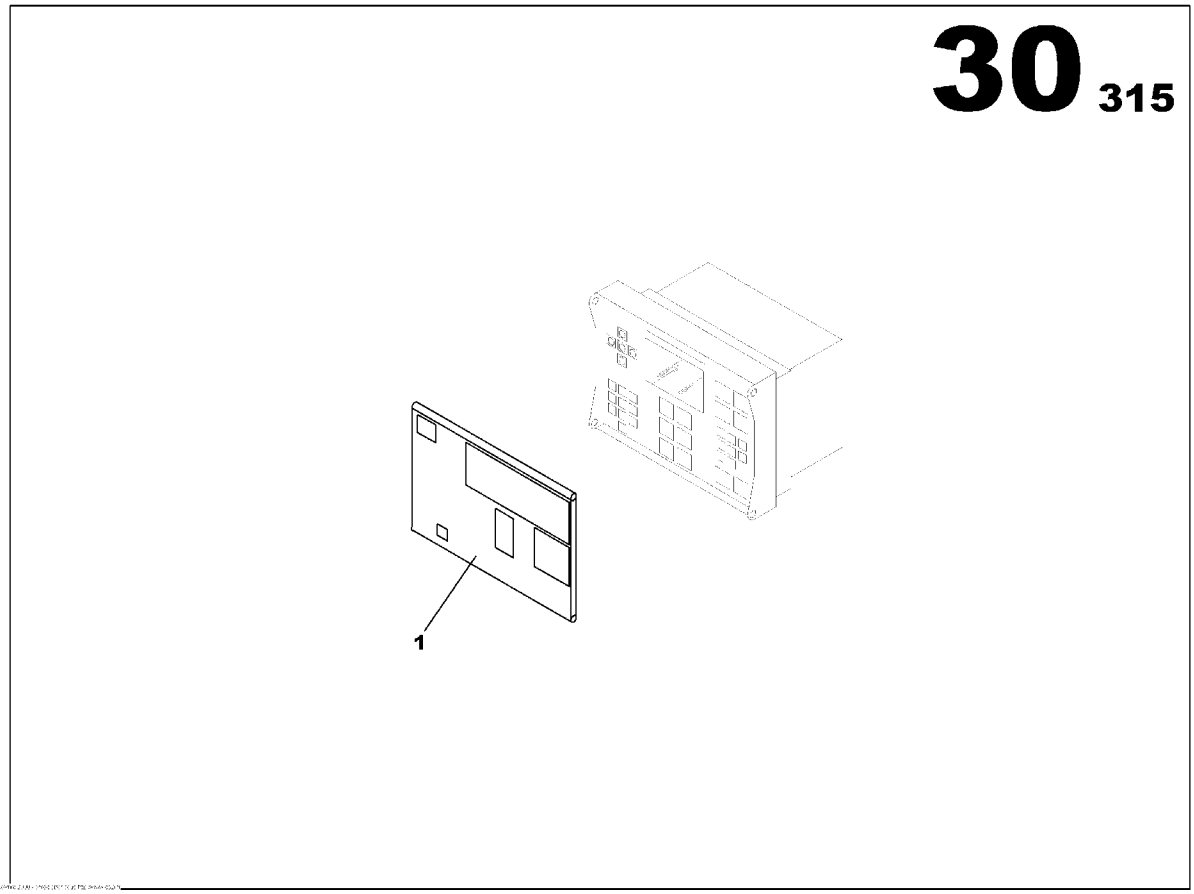

INTELLISYS tm DISPLAY
17133687

Part numbers listed are only parts used in this model

Item	Part No.	Description	Qty	Un	From SN	To SN	Order PN	Page
1	85626828	INTELLYSYS DISPLAY COVER	1	UN			85626828	

WIRING LOOM FUNCTION

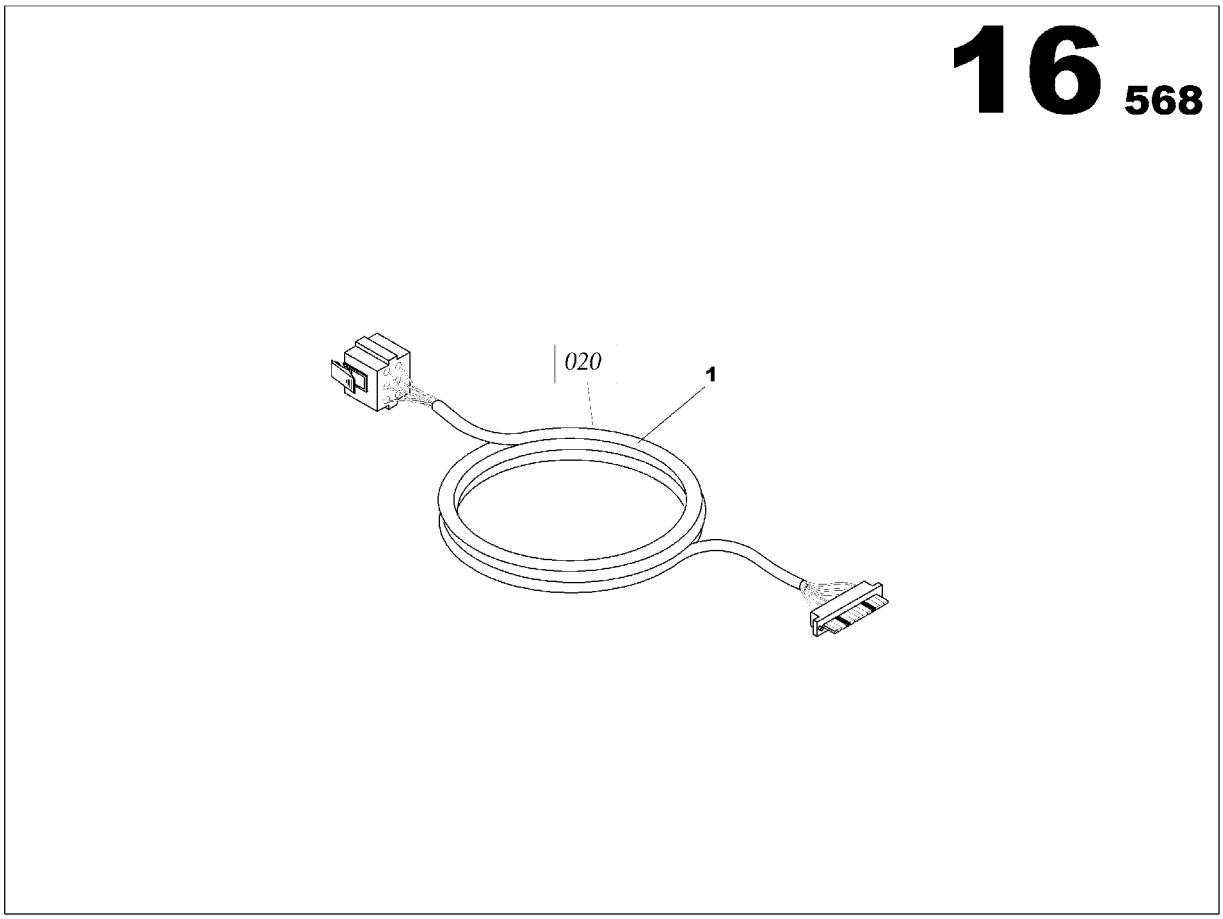

WIRING LOOM FUNCTION

Part numbers listed are only parts used in this model

Item	Part No.	Description	Qty	Un	From SN	To SN	Order PN	Page
1	17132846	INTELLISYS 020 WIRING LOOM ASSEMBLY JD 6081	1	UN			17132846	179
2	85635415	INTELLISYS 035 WIRING LOOM ASSEMBLY JD 6081	1	UN			85635415	181

INTELLISYS 020 WIRING LOOM ASSEMBLY JD 6081

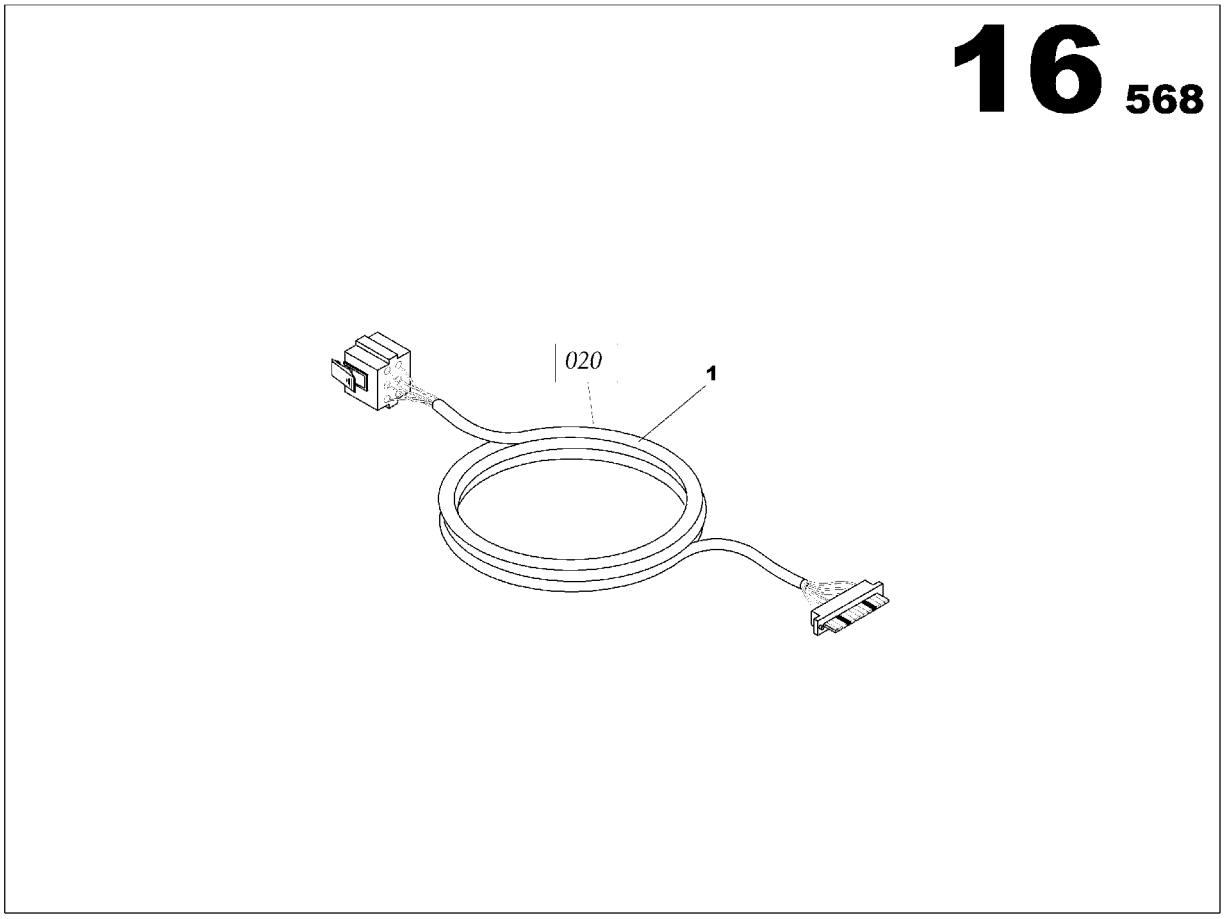

INTELLISYS 020 WIRING LOOM ASSEMBLY JD 6081
17132846

Part numbers listed are only parts used in this model

Item	Part No.	Description	Qty	Un	From SN	To SN	Order PN	Page
1	85410942	INTELLISYS WIRING LOOM 020	1	UN			85410942	

INTELLISYS 035 WIRING LOOM ASSEMBLY JD 6081

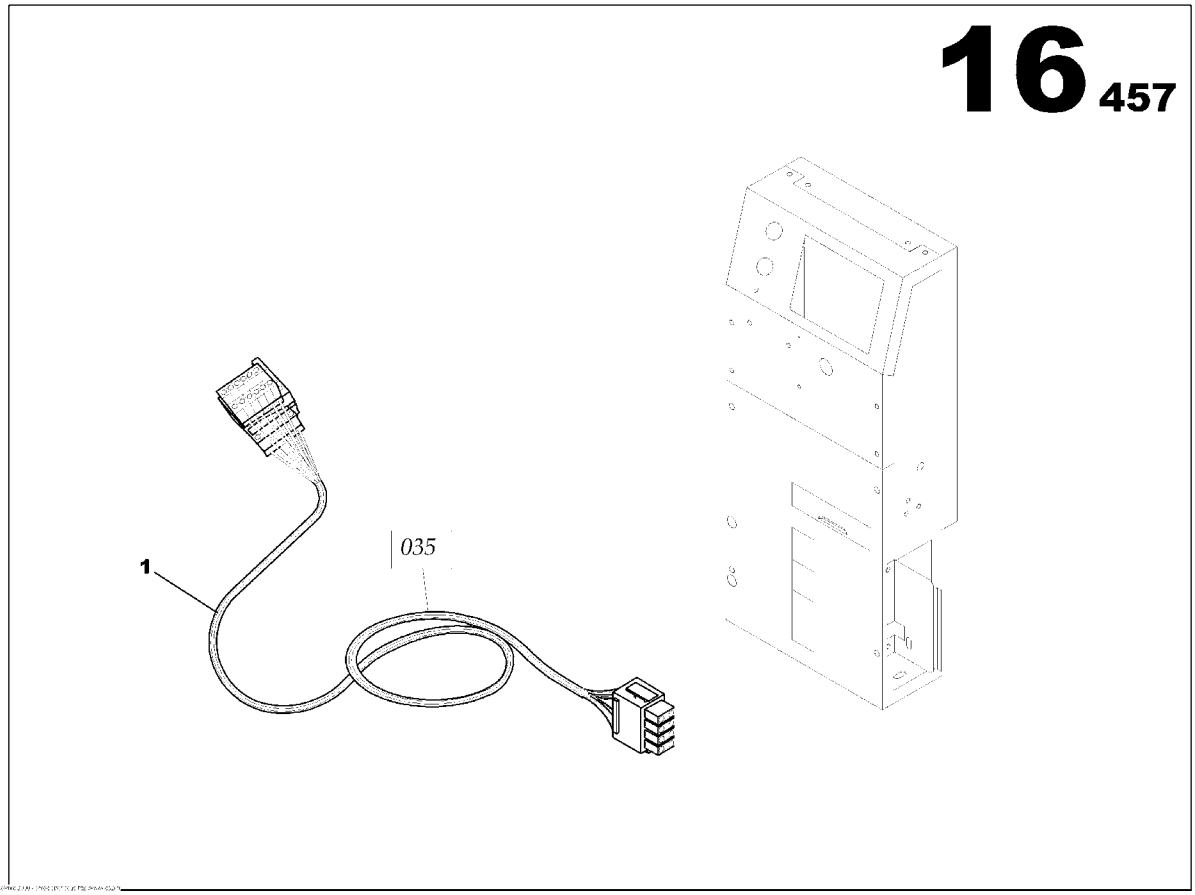

INTELLISYS 035 WIRING LOOM ASSEMBLY JD 6081
85635415

Part numbers listed are only parts used in this model

Item	Part No.	Description	Qty	Un	From SN	To SN	Order PN	Page
1	85635308	INTELLISYS WIRING LOOM 035	1	UN	02010280		85635308	

ELECTRIC SUPPLY FUNCTION

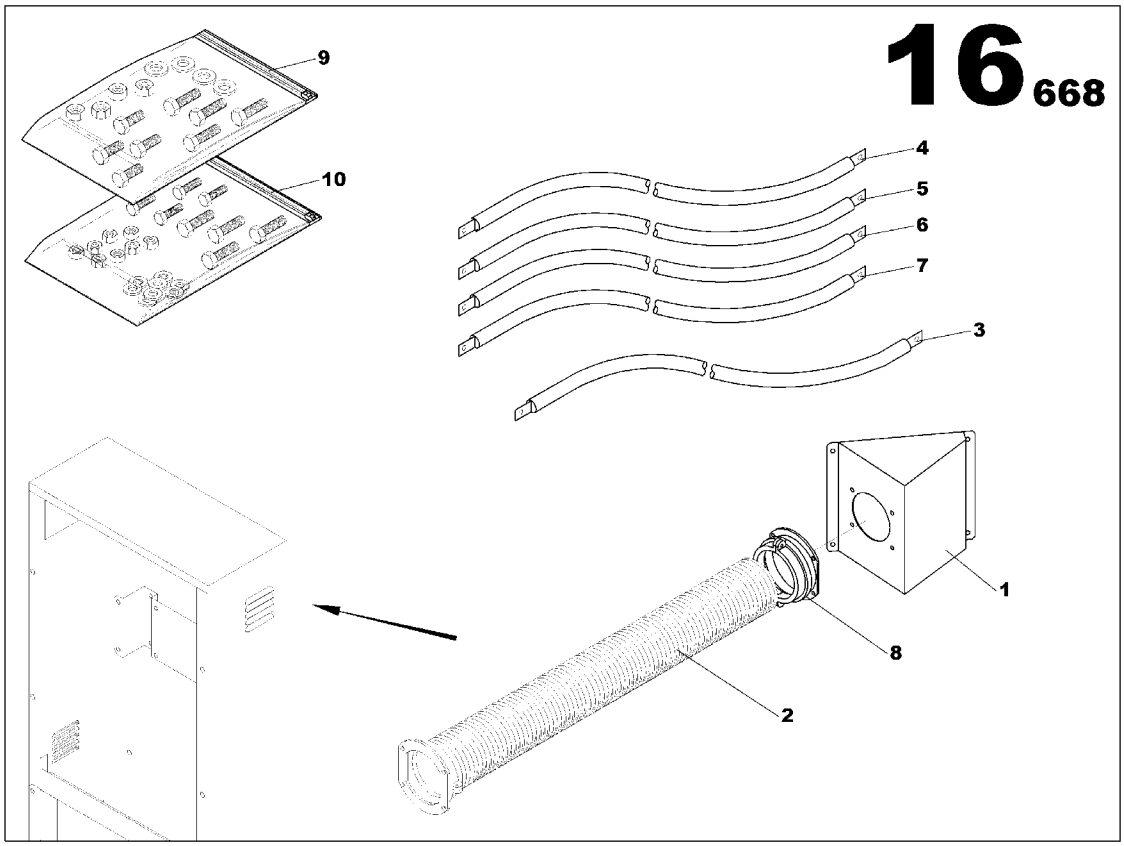

ELECTRIC SUPPLY FUNCTION

Part numbers listed are only parts used in this model

Item	Part No.	Description	Qty	Un	From SN	To SN	Order PN	Page
1	17139957	ELECTRIC CONNECTION 480A ASSEMBLY	1	UN			17139957	185
2	17140062	AIPR ASSEMBLY	1	UN			17140062	191
3	17140203	AIPR 630A ASSEMBLY	1	UN			17140203	201
4	17133083	RELEASE COIL ASSEMBLY	1	UN			17133083	215

ELECTRIC CONNECTION 480A ASSEMBLY

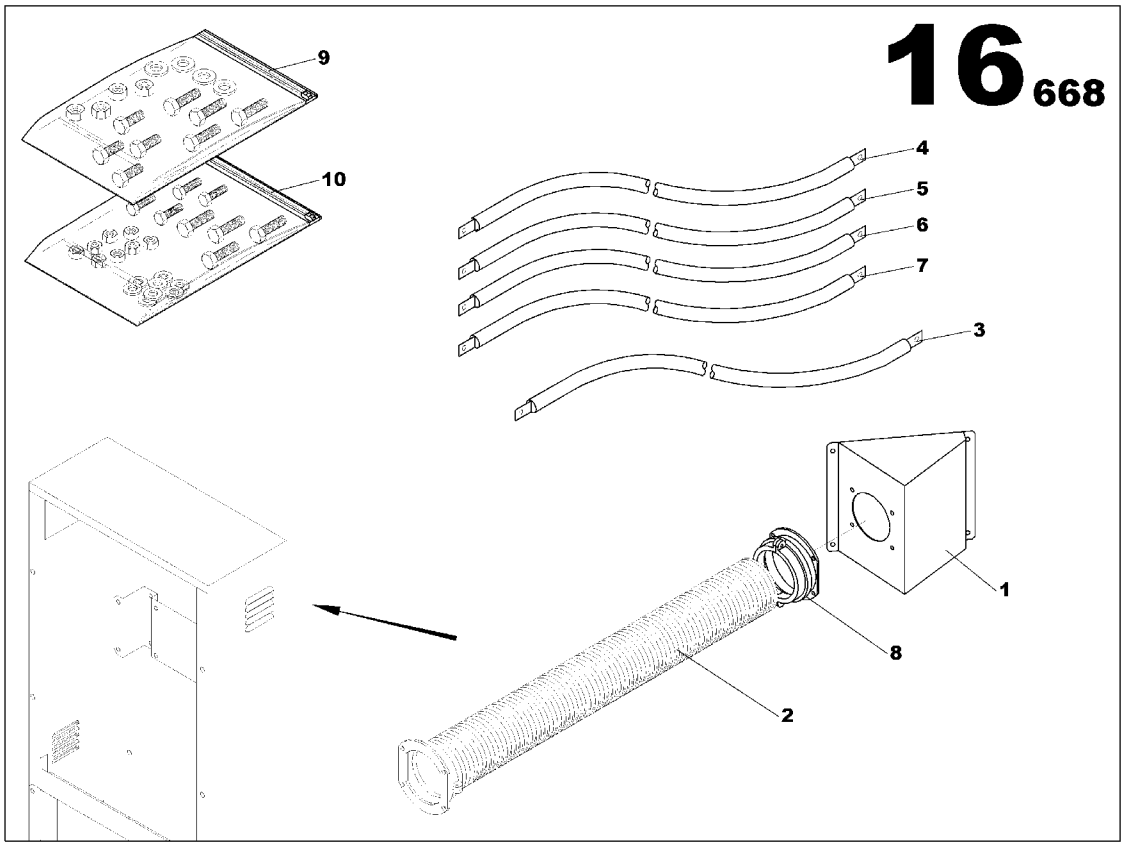

ELECTRIC CONNECTION 480A ASSEMBLY
17139957

Part numbers listed are only parts used in this model

Item	Part No.	Description	Qty	Un	From SN	To SN	Order PN	Page
1	17139866	CONNECTION HOUSING	1	UN			17139866	
2	85499499	ELECTRICAL SHAFT D48	0.7	ML			85499499	
3	17140310	EARTHING CABLE 50mm2 L2000	1	UN			17140310	
4	17140534	POWER CABLE AIPR 480A	1	UN			17140534	
5	17140542	POWER CABLE AIPR 480A	1	UN			17140542	
6	17140559	POWER CABLE AIPR 480A	1	UN			17140559	
7	17140567	POWER CABLE AIPR 480A	1	UN			17140567	
8	85499754	PIPE UNION PG70	1	UN			85499754	
9	85639383	SCREWS ASSEMBLY	1	UN			85639383	187
10	85639417	SCREWS ASSEMBLY	1	UN			85639417	189

SCREWS ASSEMBLY

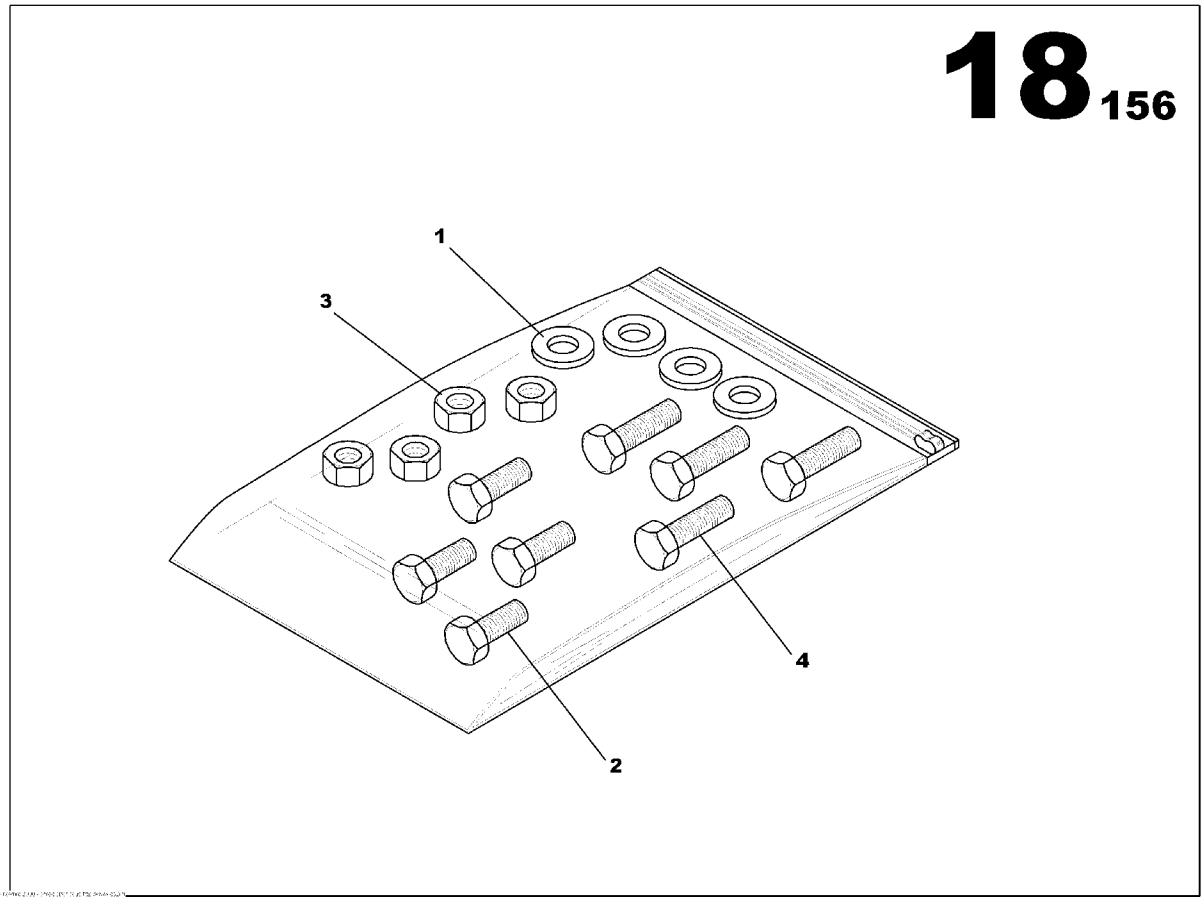

SCREWS ASSEMBLY
85639383

Part numbers listed are only parts used in this model

Item	Part No.	Description	Qty	Un	From SN	To SN	Order PN	Page
1	85636736	WASHER 6x12	4	UN			85636736	
2	85639318	SCREW H M6x16	4	UN	02010754		85639318	
3	85507911	NUT M6	4	UN			85507911	

SCREWS ASSEMBLY

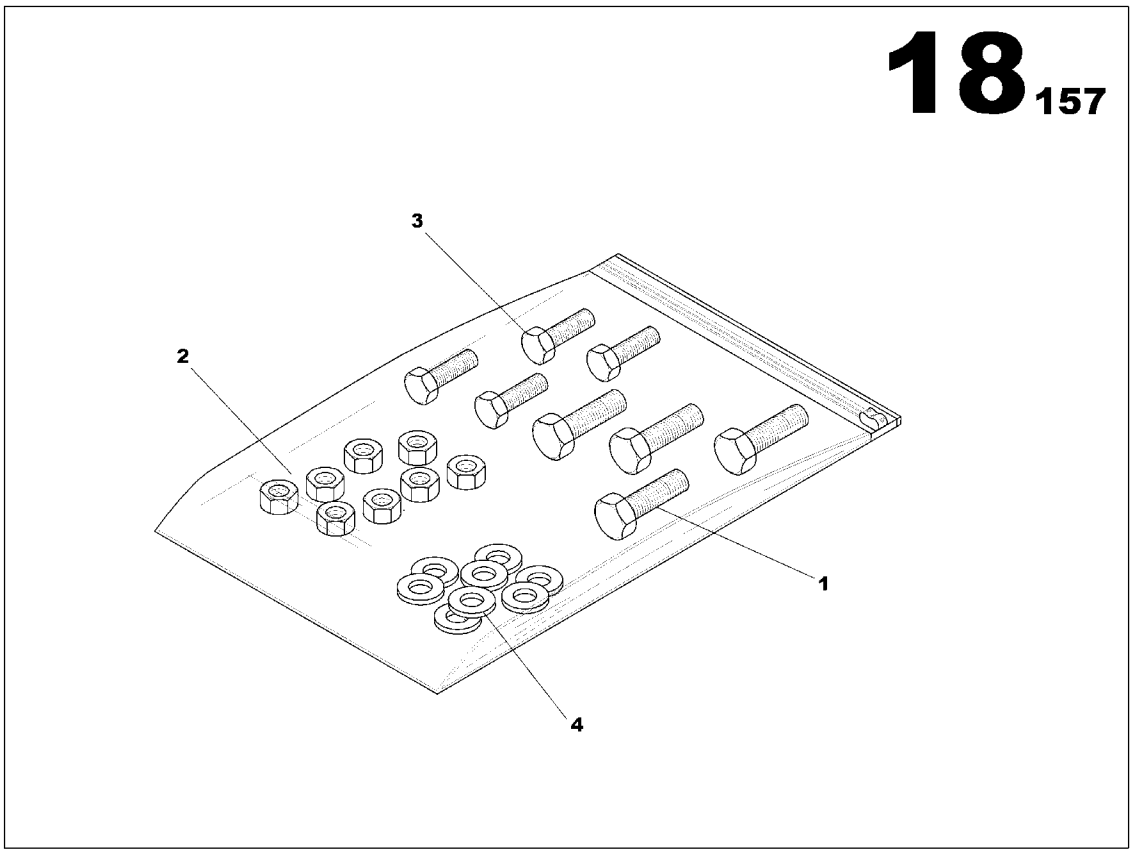

SCREWS ASSEMBLY
85639417

Part numbers listed are only parts used in this model

Item	Part No.	Description	Qty	Un	From SN	To SN	Order PN	Page
1	85636389	SCREW H M6x16	4	UN			85636389	
2	85429553	NUT M4	4	UN			85429553	
3	85636363	SCREW HS M4x16	4	UN			85636363	
4	85636728	WASHER 4x10	8	UN			85636728	

AIPR ASSEMBLY

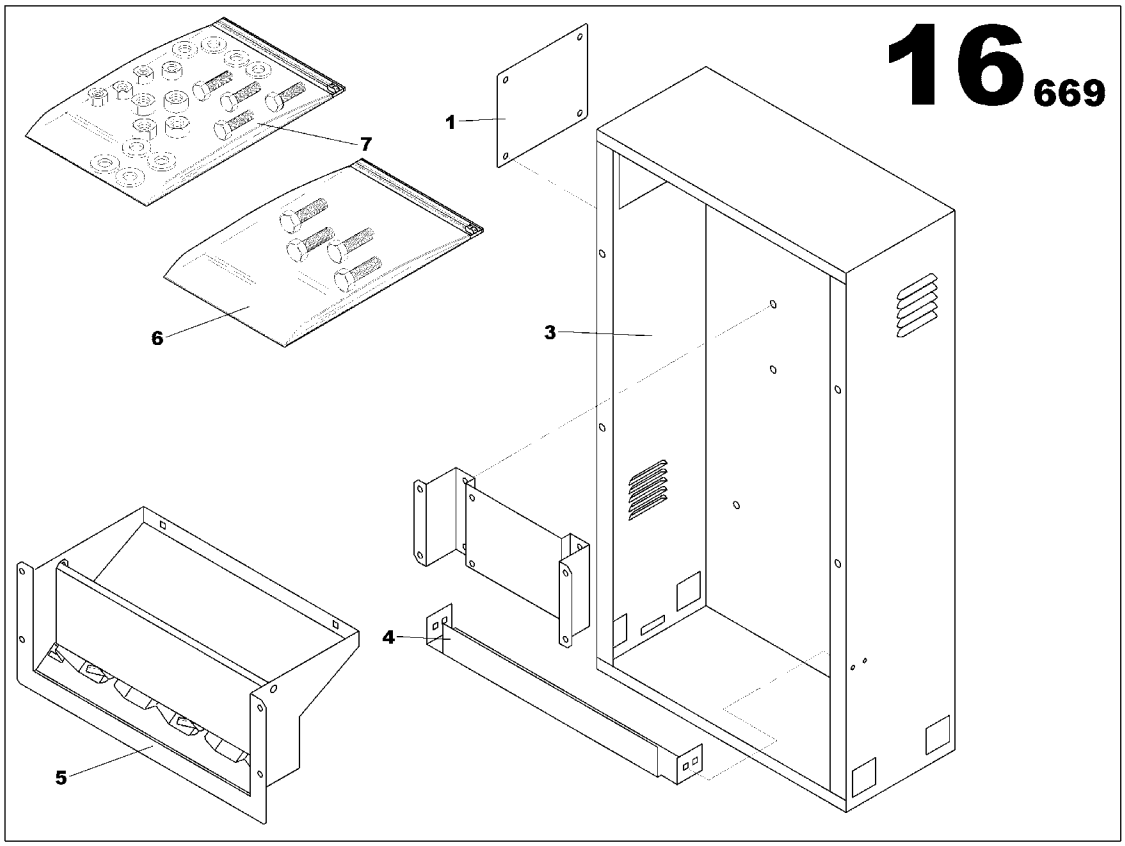

AIPR ASSEMBLY
17140062

Part numbers listed are only parts used in this model

Item	Part No.	Description	Qty	Un	From SN	To SN	Order PN	Page
1	17139676	GROUND WIRE 16mm2	1	UN			17139676	
2	17132192	GROUND WIRE 16mm2	1	UN			17132192	
3	17140054	AIPR ASSEMBLY	1	UN			17140054	193

AIPR ASSEMBLY

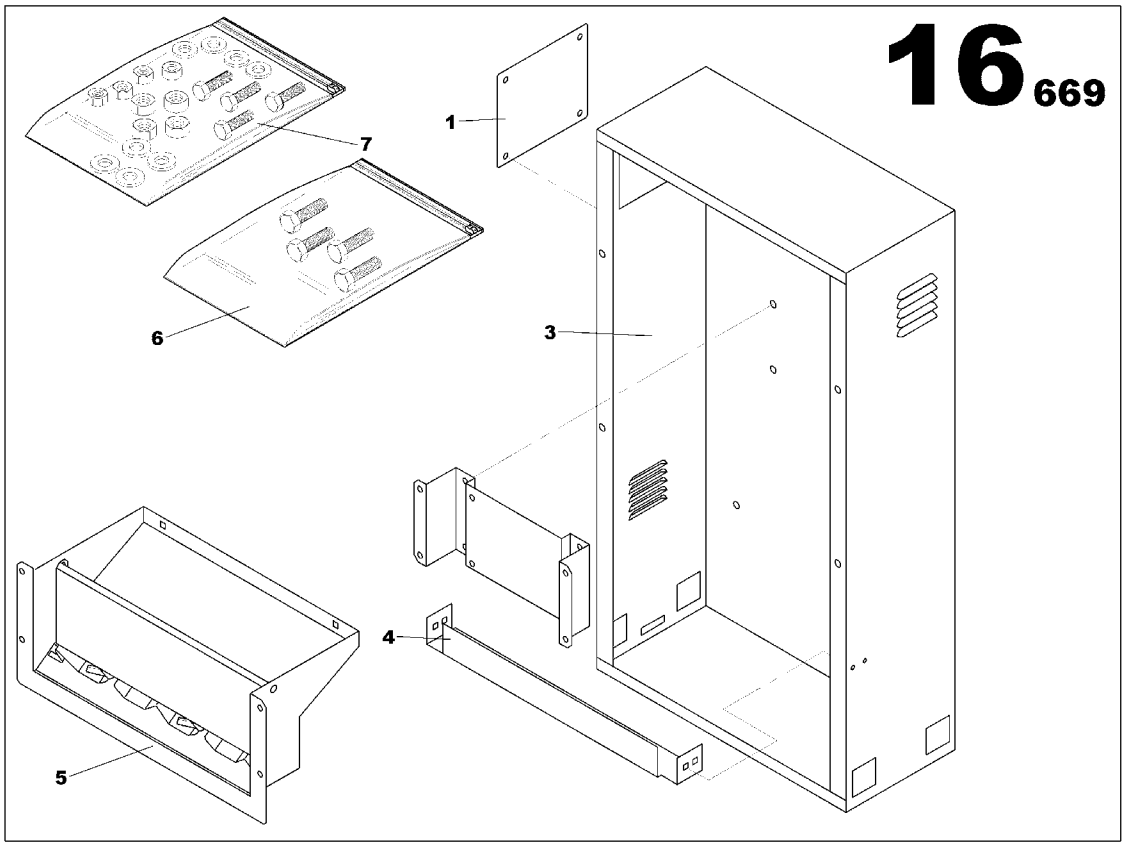

AIPR ASSEMBLY
17140054

Part numbers listed are only parts used in this model

Item	Part No.	Description	Qty	Un	From SN	To SN	Order PN	Page
1	17139858	PLATEN PANEL ALTERNATOR OPTION	1	UN			17139858	
2	17139882	CONTROL PANEL CIRCUIT BREAKER BRACKET	1	UN			17139882	
3	17139965	CIRCUIT BREAKER HOUSING	1	UN			17139965	
4	17140047	CABLE OUTLET PLATE	1	UN			17140047	
5	17140161	BRACKET CABLE COLLAR AIPR ASSEMBLY	1	UN			17140161	195
6	17140880	SCREWS MCPS AIPR ASSEMBLY	1	UN			17140880	197
7	17140898	SCREWS MCPS AIPR ASSEMBLY	1	UN			17140898	199

BRACKET CABLE COLLAR AIPR ASSEMBLY

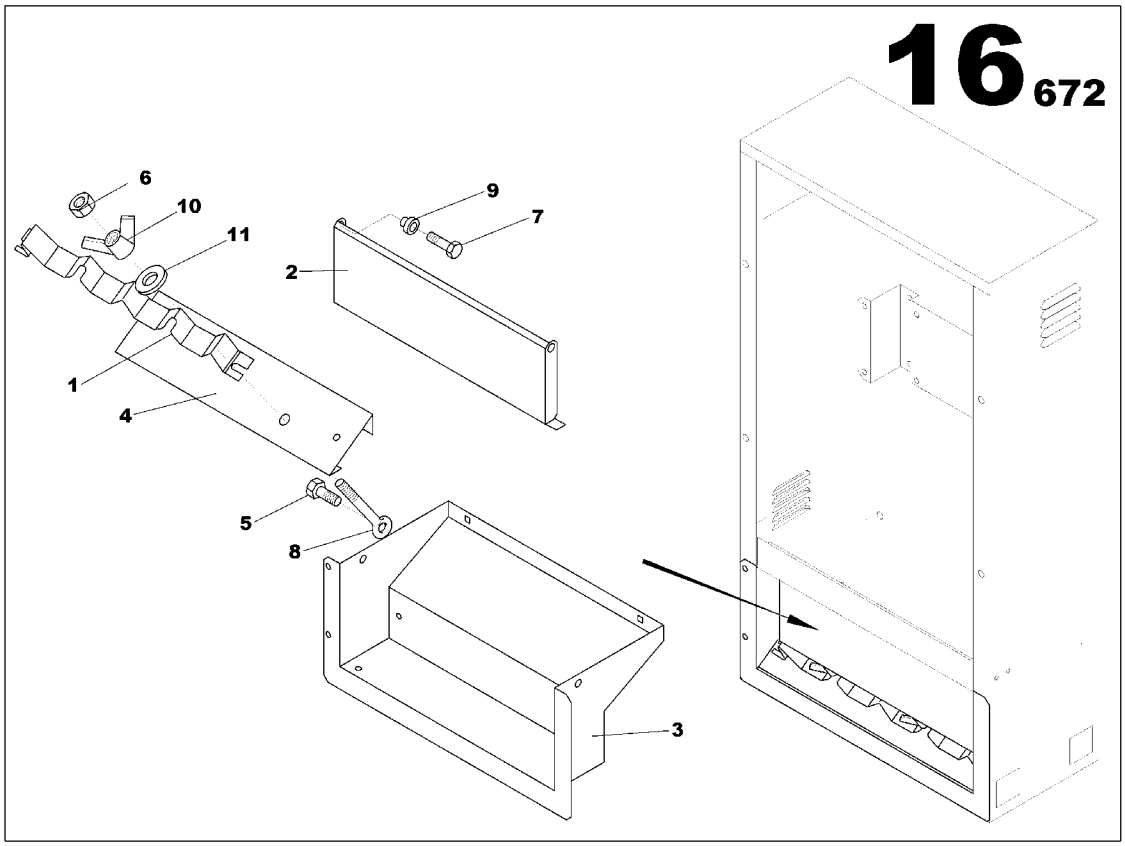

BRACKET CABLE COLLAR AIPR ASSEMBLY
17140161

Part numbers listed are only parts used in this model

Item	Part No.	Description	Qty	Un	From SN	To SN	Order PN	Page
1	17139684	CABLE AIPR BRACKET	1	UN			17139684	
2	17140096	TOLE BASCULANTE AIPR	1	UN			17140096	
3	17140146	CABLE PASSAGE PANEL M405	1	UN			17140146	
4	17140153	CABLE COLLAR AIPR BRACKET	1	UN			17140153	
5	85429744	SCREW H M8x25	2	UN			85429744	
6	17133240	NUT M8	2	UN			17133240	
7	85636389	SCREW H M6x16	2	UN			85636389	
8	17133257	SCREW	2	UN			17133257	
9	85636660	SLEAVE BEARING	2	UN			85636660	
10	85410140	WING NUT M8	2	UN			85410140	
11	85430213	WASHER 8x18	2	UN			85430213	

SCREWS MCPS AIPR ASSEMBLY

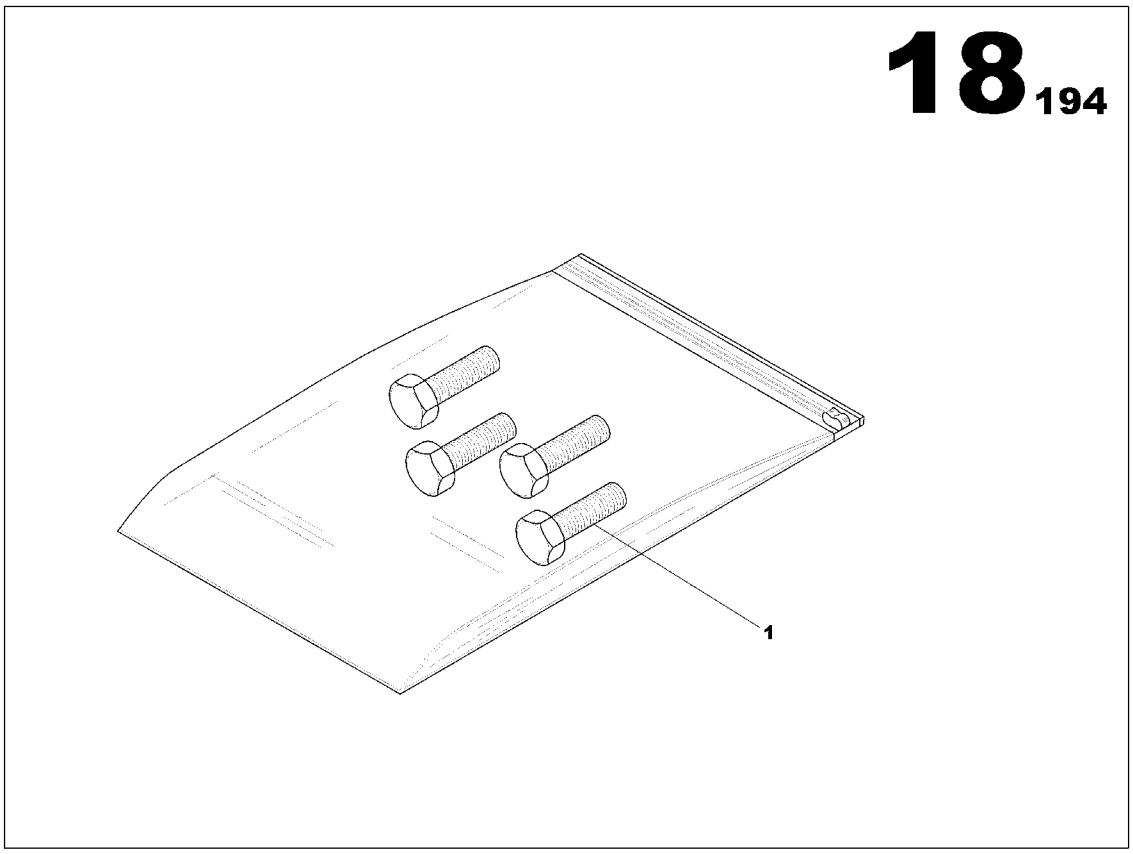

SCREWS MCPS AIPR ASSEMBLY
17140880

Part numbers listed are only parts used in this model

Item	Part No.	Description	Qty	Un	From SN	To SN	Order PN	Page
1	85636389	SCREW H M6x16	4	UN			85636389	

SCREWS MCPS AIPR ASSEMBLY

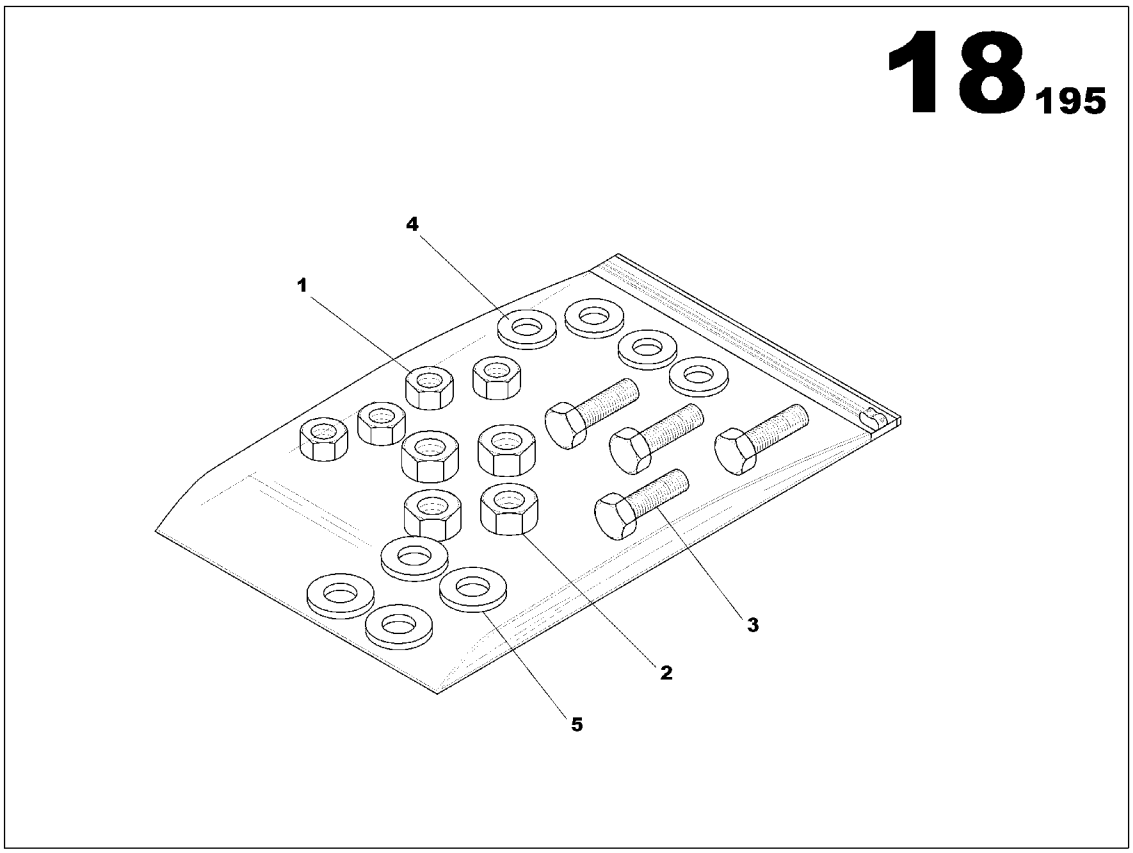

SCREWS MCPS AIPR ASSEMBLY
17140898

Part numbers listed are only parts used in this model

Item	Part No.	Description	Qty	Un	From SN	To SN	Order PN	Page
1	85507911	NUT M6	4	UN			85507911	
2	85509743	NUT M8	4	UN			85509743	
3	85636371	SCREW H M8x20	4	UN			85636371	
4	85429793	WASHER 6x14	4	UN			85429793	
5	85636751	WASHER 8x16	4	UN			85636751	

AIPR 630A ASSEMBLY

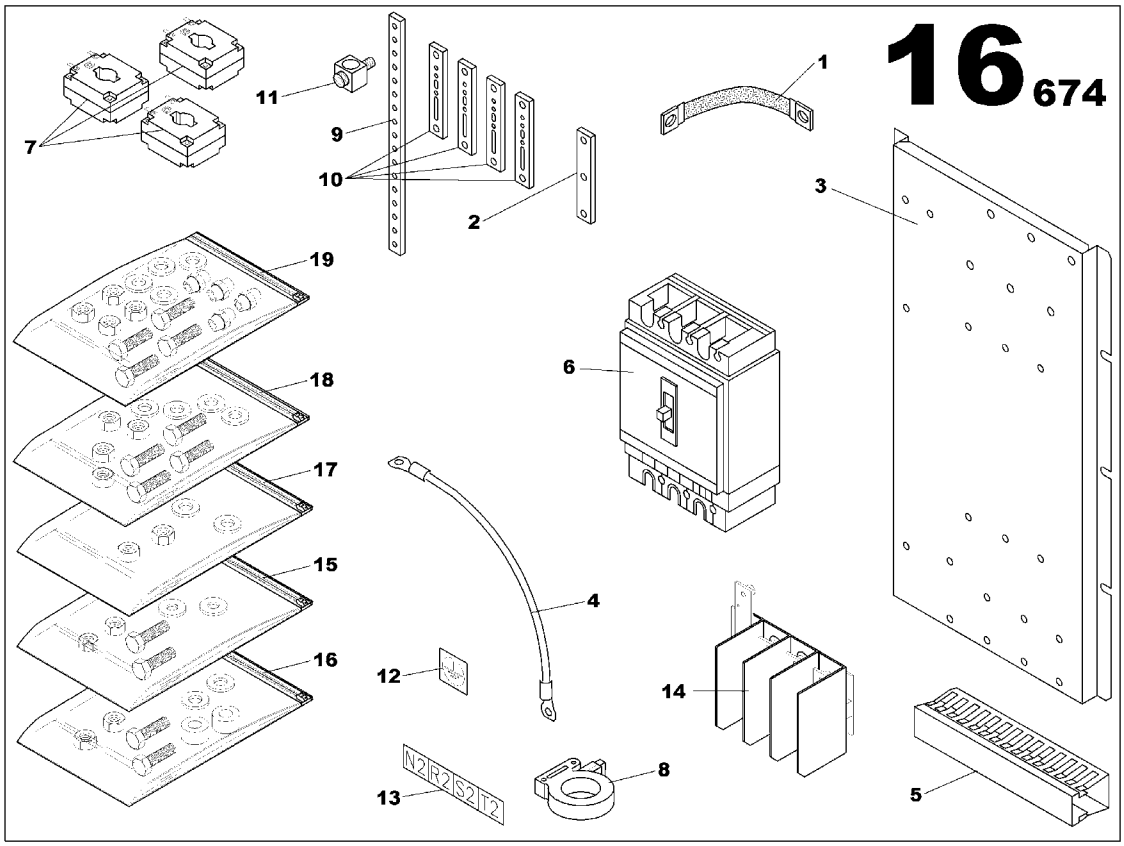

AIPR 630A ASSEMBLY
17140203

Part numbers listed are only parts used in this model

Item	Part No.	Description	Qty	Un	From SN	To SN	Order PN	Page
1	17132192	GROUND WIRE 16mm2	1	UN			17132192	
2	85416915	COPPER BAR 10x30	1	UN			85416915	
3	17132457	CIRCUIT BREAKER AIPR BRACKET	1	UN			17132457	
4	85638849	NEUTRAL/EARTH SYSTEM CABLE 35mm2	1	UN			85638849	
5	17133018	WIRING LOOM SUPPORT	0.5	ML			17133018	
6	85417913	COMPACT CIRCUIT BREAKER 4x630A	1	UN			85417913	
7	85639029	CURRENT TRANSFORMER 600/5	3	UN			85639029	
8	85635886	TORE	1	UN			85635886	
9	17135039	COPPER BAR 5x30	1	UN			17135039	
10	17133125	COPPER BAR 10x30	4	UN			17133125	
11	17133133	TERMINALS	1	UN			17133133	
12	85409084	STICKER EARTH SYMBOL	1	UN			85409084	
13	85409126	STICKER POWER LINK	1	UN			85409126	
14	17133117	SEPARATOR SCREEN ASSEMBLY	1	UN			17133117	203
15	85636454	SCREWS ASSEMBLY	1	UN			85636454	205
16	17133265	SCREWS MCPS AIPR ASSEMBLY	1	UN			17133265	207
17	17133273	SCREWS MCPS AIPR ASSEMBLY	1	UN			17133273	209
18	17133281	SCREWS MCPS AIPR ASSEMBLY	1	UN			17133281	211
19	17133299	SCREWS MCPS AIPR ASSEMBLY	1	UN			17133299	213

SEPARATOR SCREEN ASSEMBLY

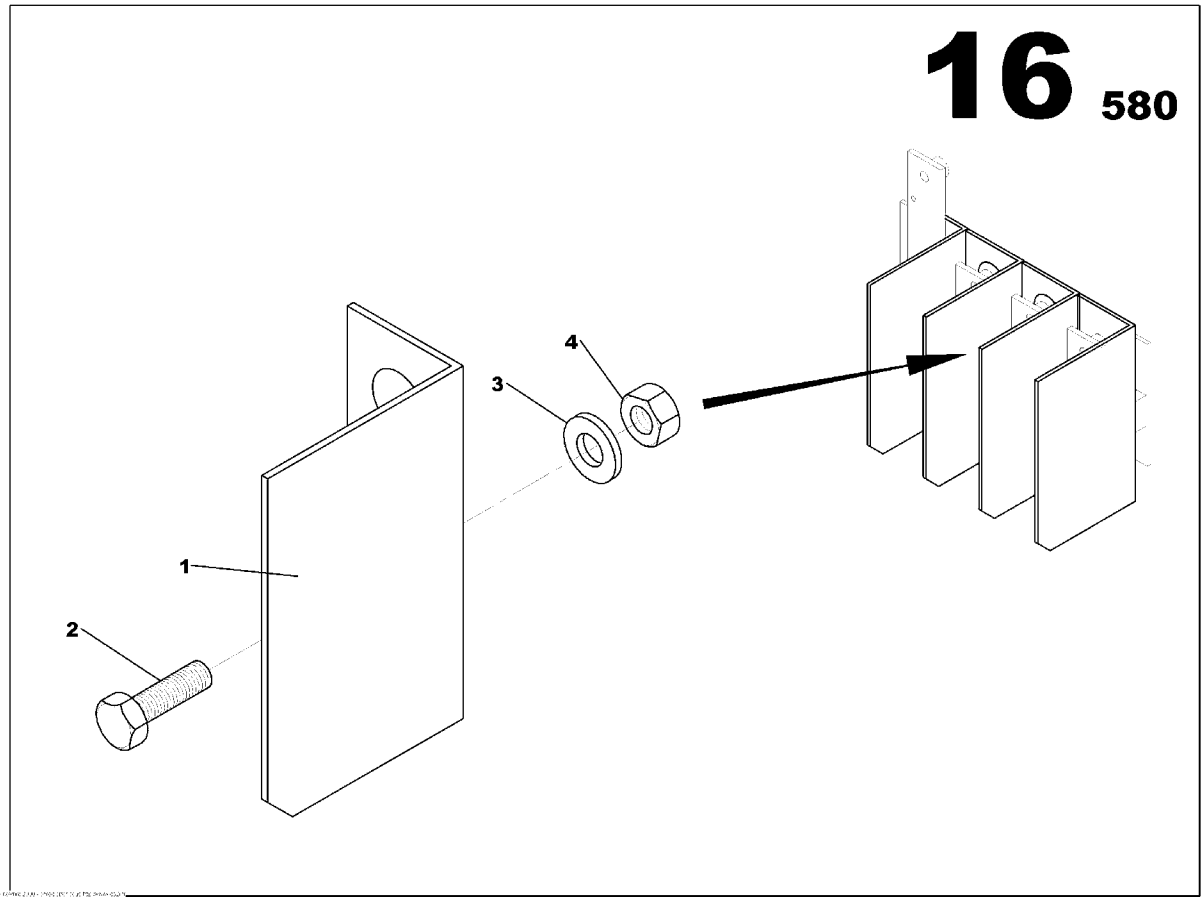

SEPARATOR SCREEN ASSEMBLY
17133117

Part numbers listed are only parts used in this model

Item	Part No.	Description	Qty	Un	From SN	To SN	Order PN	Page
1	17133109	PHASE ISOLATOR AIPR	4	UN			17133109	
2	85636389	SCREW H M6x16	4	UN			85636389	
3	85429793	WASHER 6x14	4	UN			85429793	
4	85507911	NUT M6	4	UN			85507911	

SCREWS ASSEMBLY

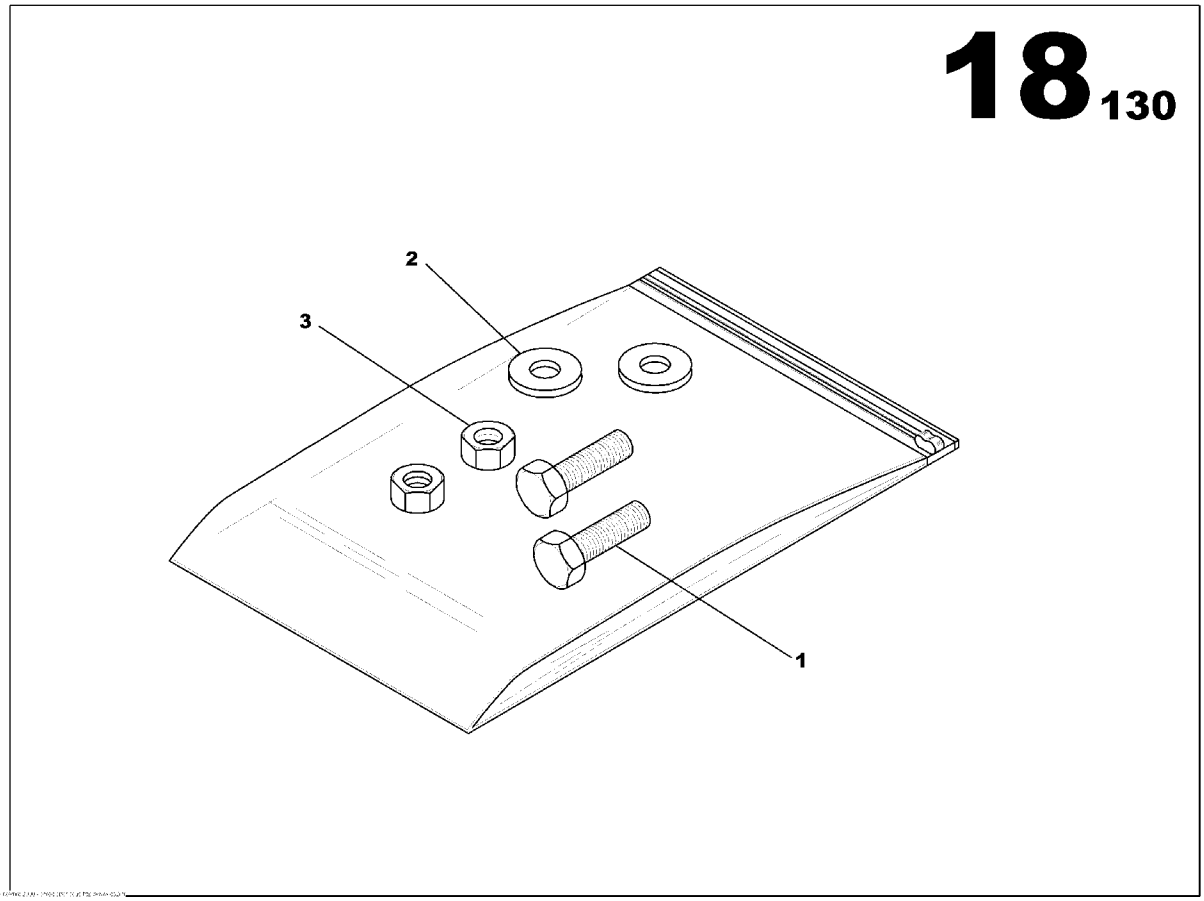

SCREWS ASSEMBLY
85636454

Part numbers listed are only parts used in this model

Item	Part No.	Description	Qty	Un	From SN	To SN	Order PN	Page
1	85636363	SCREW HS M4x16	2	UN			85636363	
2	85636728	WASHER 4x10	2	UN			85636728	
3	85429553	NUT M4	2	UN			85429553	

SCREWS MCPS AIPR ASSEMBLY

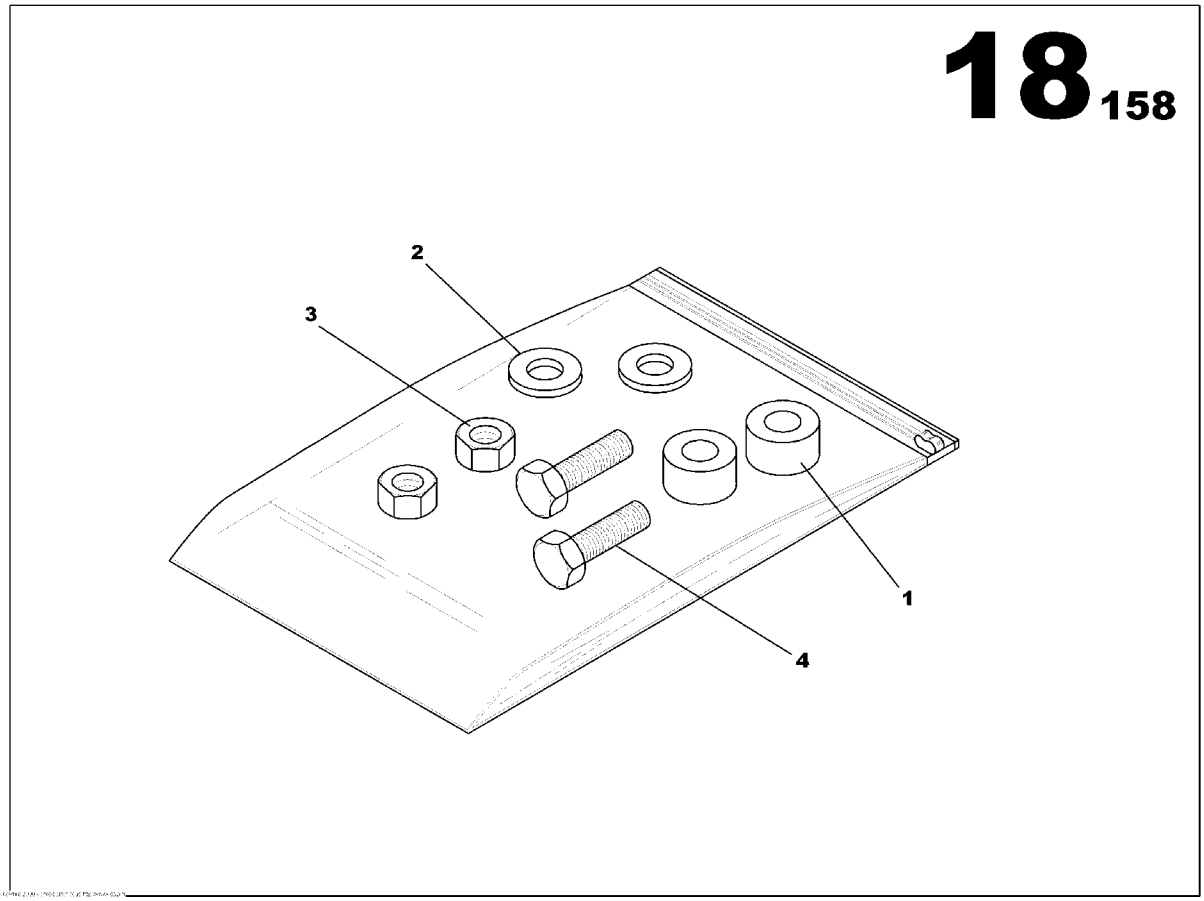

SCREWS MCPS AIPR ASSEMBLY
17133265

Part numbers listed are only parts used in this model

Item	Part No.	Description	Qty	Un	From SN	To SN	Order PN	Page
1	85639680	SPACER	2	UN			85639680	
2	85636736	WASHER 6x12	2	UN			85636736	
3	85507911	NUT M6	2	UN			85507911	
4	85636389	SCREW H M6x16	2	UN			85636389	

SCREWS MCPS AIPR ASSEMBLY

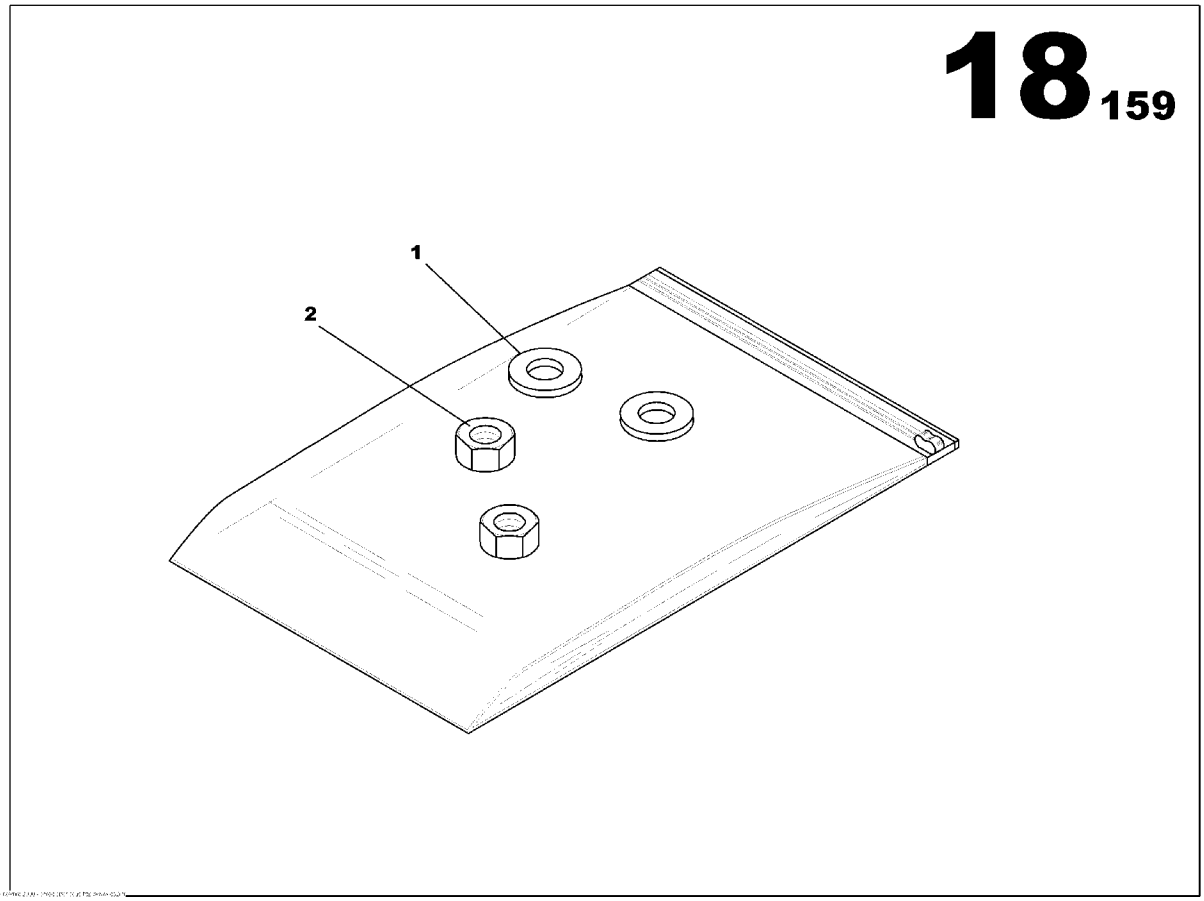

SCREWS MCPS AIPR ASSEMBLY
17133273

Part numbers listed are only parts used in this model

Item	Part No.	Description	Qty	Un	From SN	To SN	Order PN	Page
1	85636736	WASHER 6x12	2	UN			85636736	
2	85507911	NUT M6	2	UN			85507911	

SCREWS MCPS AIPR ASSEMBLY

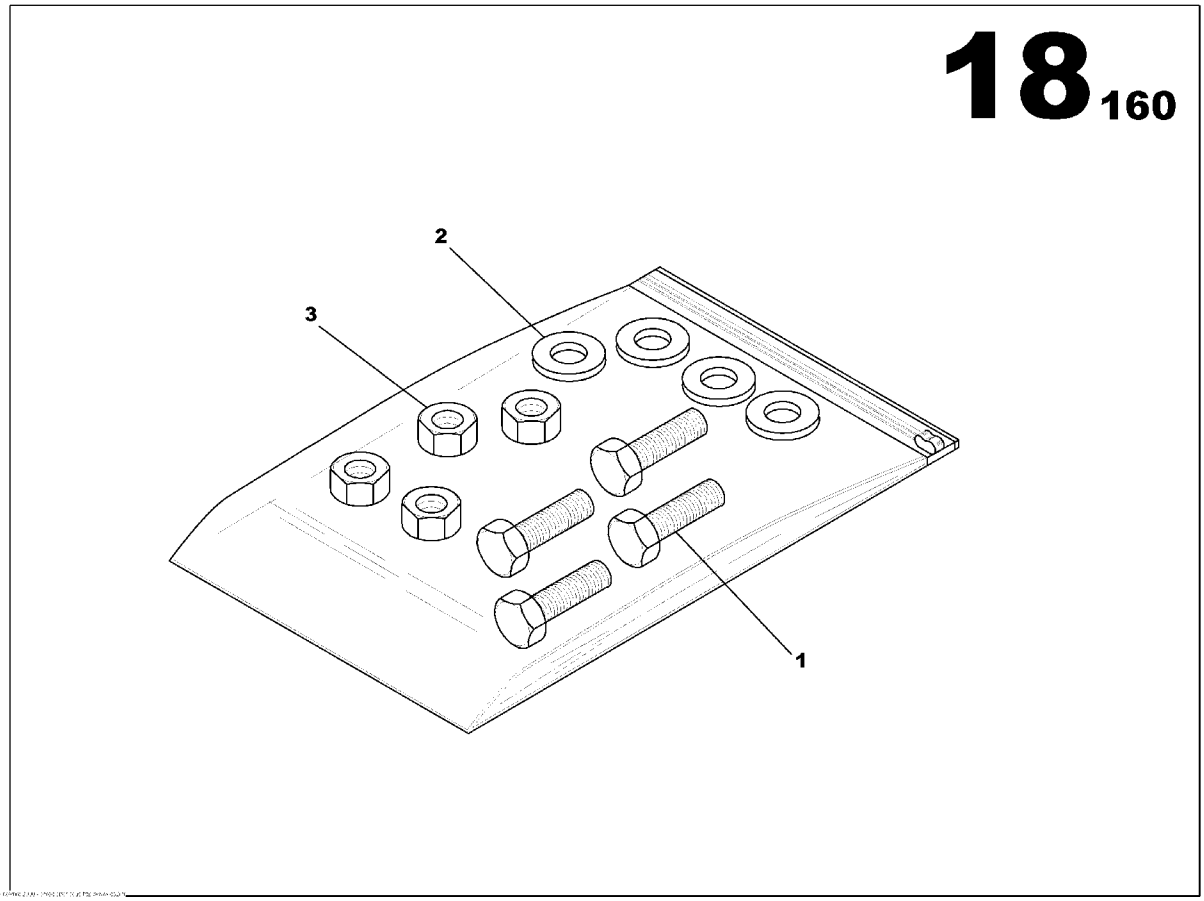

SCREWS MCPS AIPR ASSEMBLY
17133281

Part numbers listed are only parts used in this model

Item	Part No.	Description	Qty	Un	From SN	To SN	Order PN	Page
1	85636389	SCREW H M6x16	4	UN			85636389	
2	85636736	WASHER 6x12	4	UN			85636736	
3	85507911	NUT M6	4	UN			85507911	

SCREWS MCPS AIPR ASSEMBLY

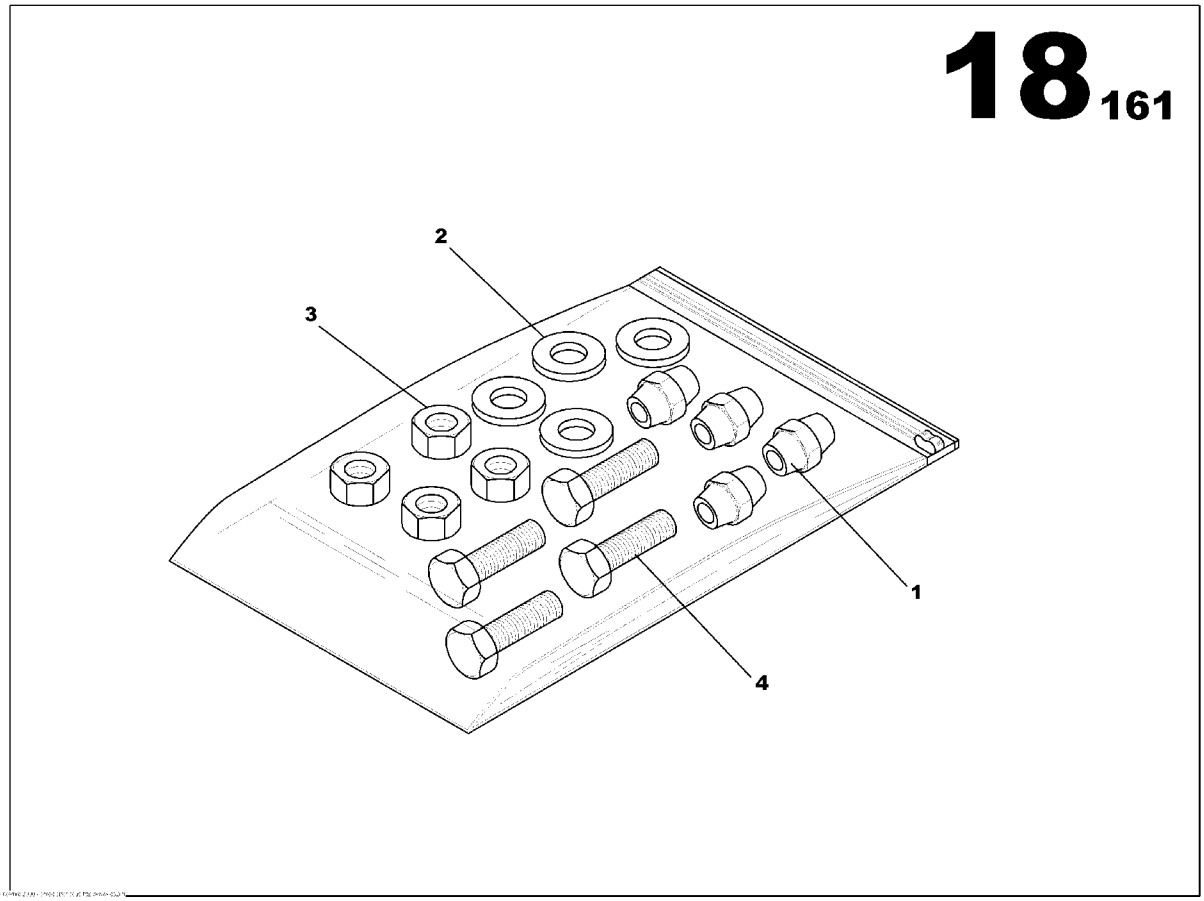

SCREWS MCPS AIPR ASSEMBLY
17133299

Part numbers listed are only parts used in this model

Item	Part No.	Description	Qty	Un	From SN	To SN	Order PN	Page
1	17133067	INSULATION PIN	4	UN			17133067	
2	85636736	WASHER 6x12	4	UN			85636736	
3	85507911	NUT M6	4	UN			85507911	
4	85636389	SCREW H M6x16	4	UN			85636389	

RELEASE COIL ASSEMBLY

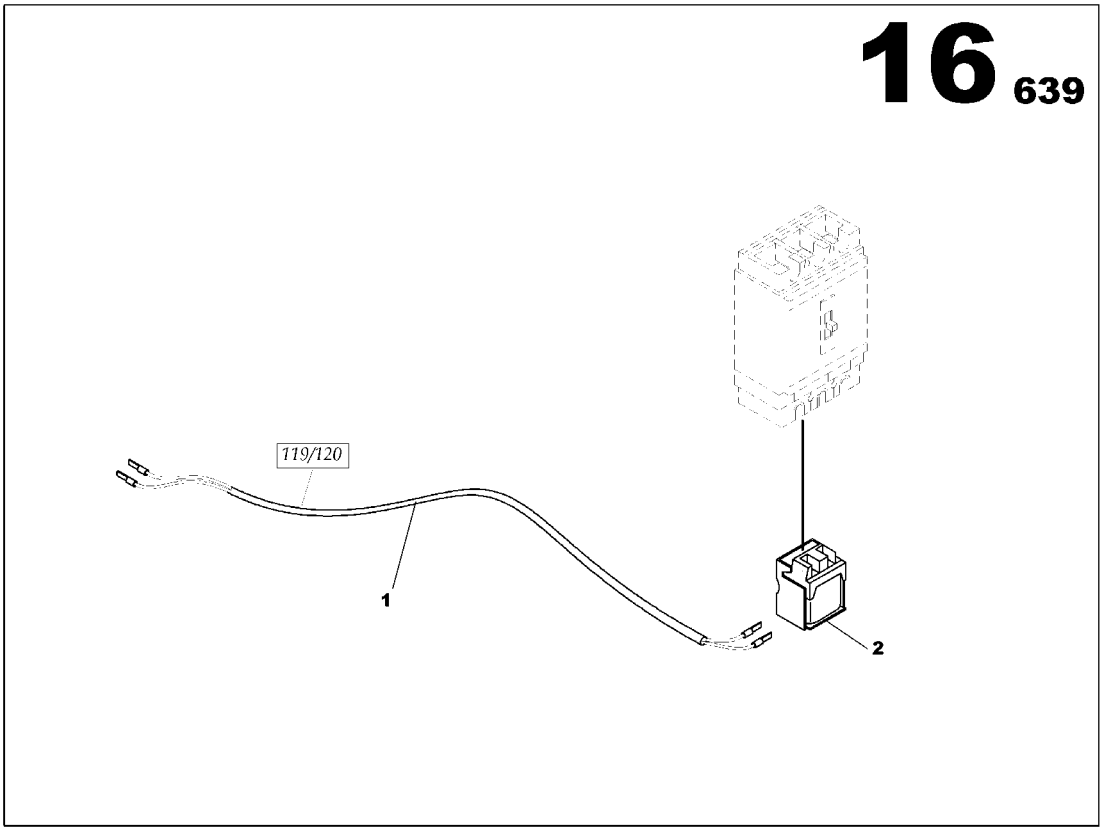

RELEASE COIL ASSEMBLY
17133083

Part numbers listed are only parts used in this model

Item	Part No.	Description	Qty	Un	From SN	To SN	Order PN	Page
1	17132812	INTELLISYS WIRING LOOM 119/120	1	UN			17132812	
2	85408573	CIRCUIT BREAKER SHUNT RELEASE COIL 200/280VAC	1	UN			85408573	

AUTO START OPTION

AUTO START OPTION

Part numbers listed are only parts used in this model

Item	Part No.	Description	Qty	Un	From SN	To SN	Order PN	Page
1	17137100	WATER PREHEATING ASSEMBLY 1000W	1	UN			17137100	219
2	85636173	EXTERNAL AMF PREDISPOSITION OPTION *-Information*	1	UN			85636173	225
3	17140724	WATER PREHEATING OPTION	1	UN			17140724	
4	17140732	BATTERY CHARGER OPTION	1	UN			17140732	
5	85636256	CURRENT SENSOR OPTION	1	UN			85636256	227
6	17133075	AUXILIARY CONTACT ASSEMBLY	1	UN			17133075	229
7	85635399	INTELLISYS 016 WIRING LOOM ASSEMBLY JD 6081	1	UN			85635399	231

WATER PREHEATING ASSEMBLY 1000W

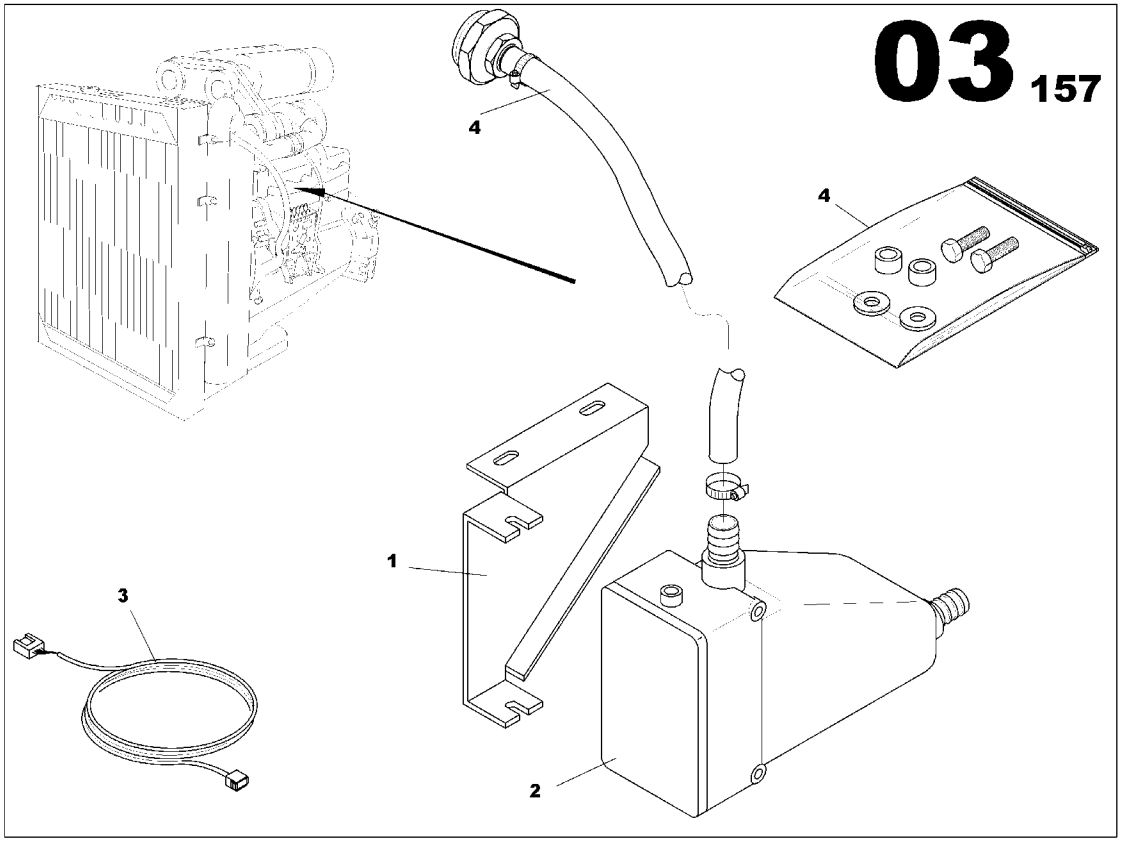

WATER PREHEATING ASSEMBLY 1000W
17137100

Part numbers listed are only parts used in this model

Item	Part No.	Description	Qty	Un	From SN	To SN	Order PN	Page
1	17137118	WATER PREHEATING ASSEMBLY	1	UN			17137118	221

WATER PREHEATING ASSEMBLY

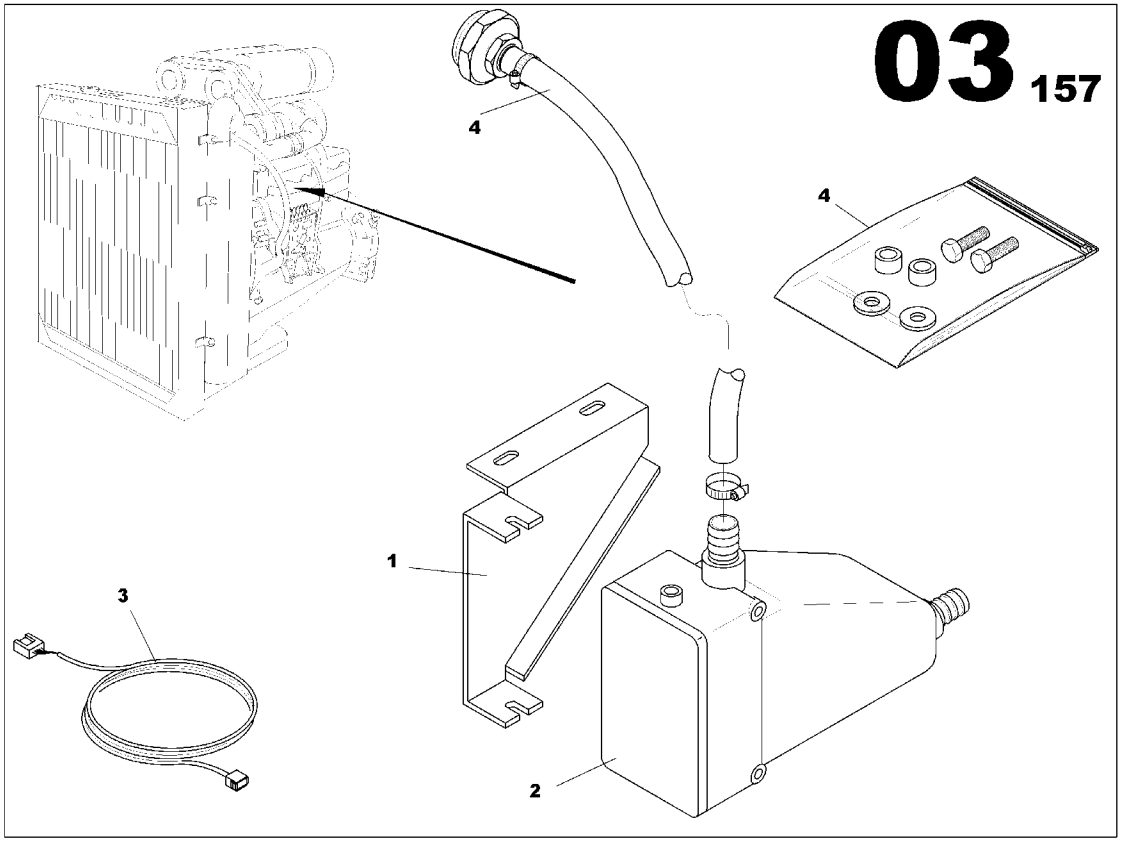

WATER PREHEATING ASSEMBLY
17137118

Part numbers listed are only parts used in this model

Item	Part No.	Description	Qty	Un	From SN	To SN	Order PN	Page
1	85430023	PREHEATER HOUSING BRACKET VOLVO 7/10L/12L	1	UN			85430023	
2	17137167	RESISTANCE HOUSING 1000W	1	UN			17137167	
3	85629475	BLOCK HEATER WIRING	1	UN			85629475	
4	17140922	SCREWS ASSEMBLY	1	UN			17140922	223

SCREWS ASSEMBLY

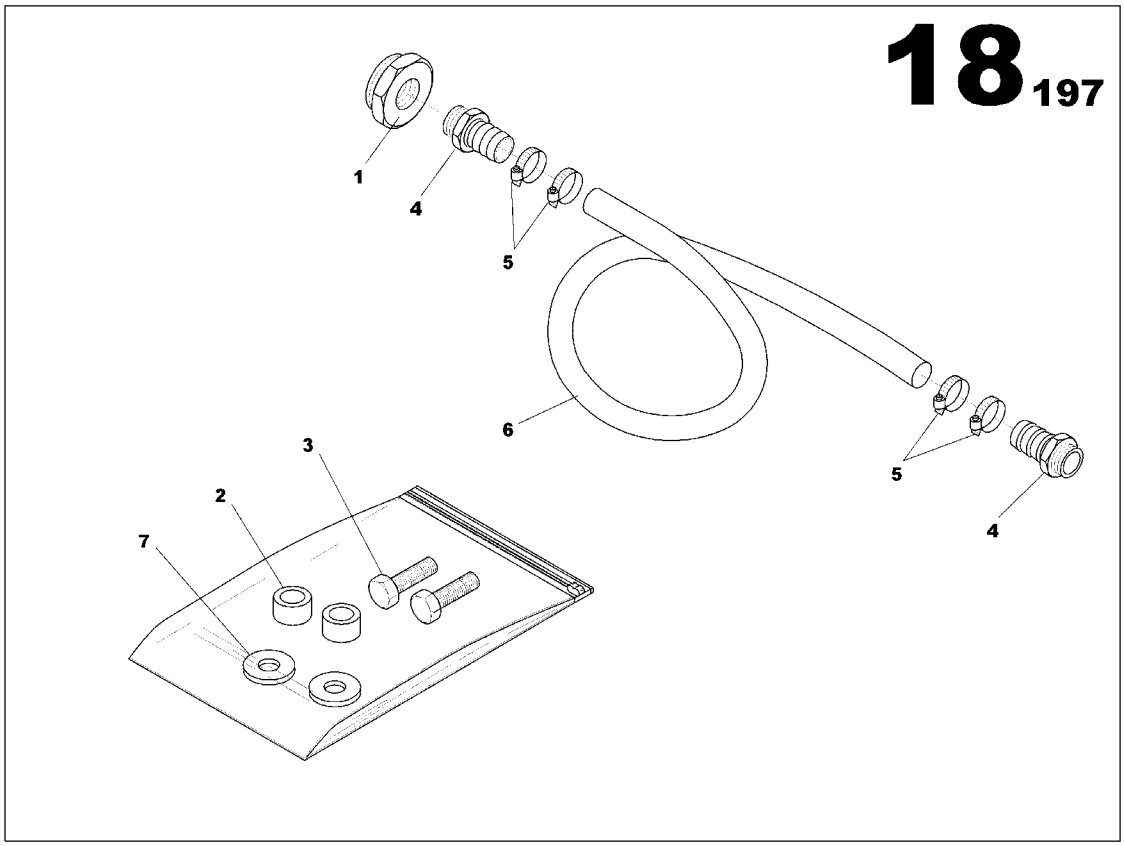

SCREWS ASSEMBLY
17140922

Part numbers listed are only parts used in this model

Item	Part No.	Description	Qty	Un	From SN	To SN	Order PN	Page
1	85423218	PIPE UNION REDUCER MAL/FEM 1-3/4UNF 1/2G	1	UN			85423218	
2	85421204	SPACER Th10 D15	2	UN			85421204	
3	85430296	SCREW H M5	2	UN			85430296	
4	85430254	PIPE UNION MAL/MAL 1/2G	2	UN			85430254	
5	85409423	HOSE CLIP D20/32	4	UN			85409423	
6	85424844	FLEXIBLE HOSE D16x26	0.7	ML			85424844	
7	85430270	WASHER 8X22	2	UN			85430270	

EXTERNAL AMF PREDISPOSITION OPTION

EXTERNAL AMF PREDISPOSITION OPTION
85636173

Part numbers listed are only parts used in this model

Item	Part No.	Description	Qty	Un	From SN	To SN	Order PN	Page

CURRENT SENSOR OPTION

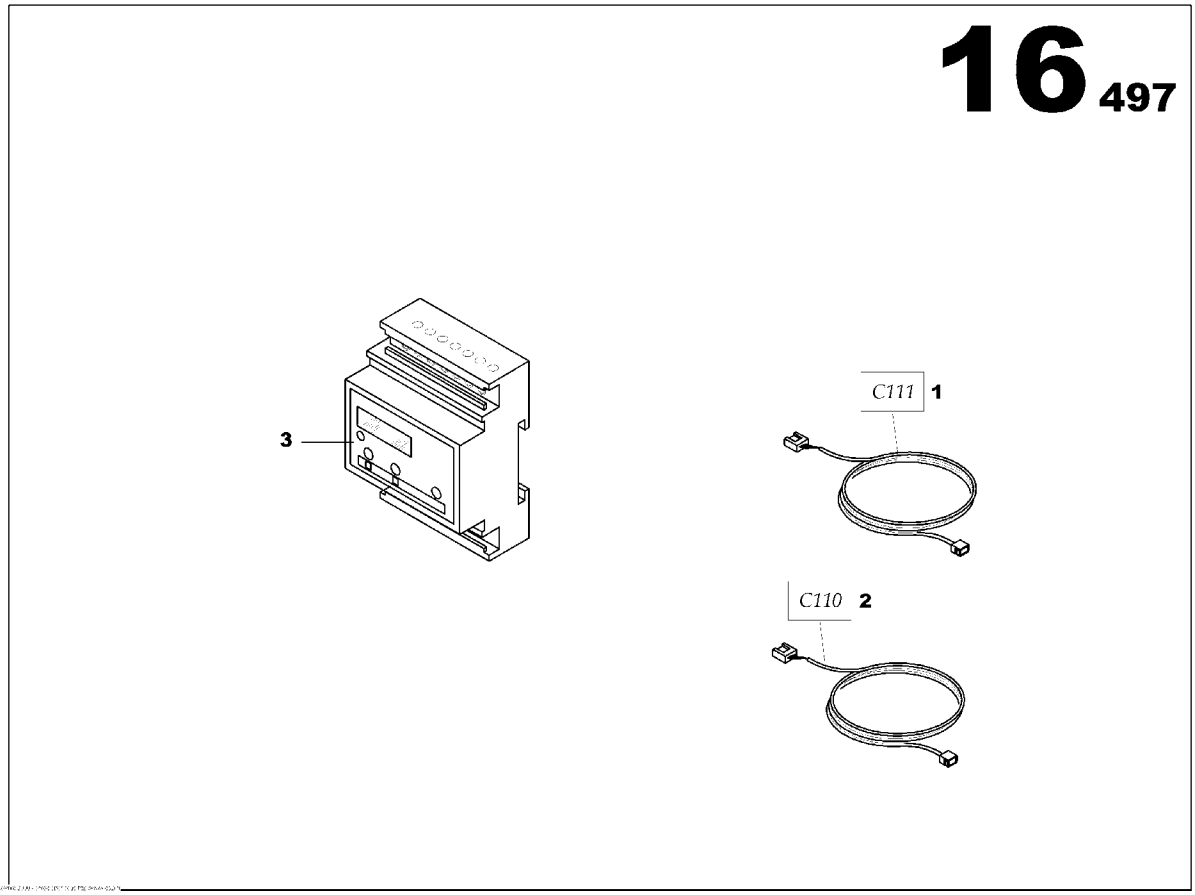

CURRENT SENSOR OPTION
85636256

Part numbers listed are only parts used in this model

Item	Part No.	Description	Qty	Un	From SN	To SN	Order PN	Page
1	85630663	WIRING LOOM C111 L800	1	UN			85630663	
2	85630721	WIRING LOOM C110 L300	1	UN			85630721	
3	85623809	CURRENT SENSOR MODULE	1	UN			85623809	

AUXILIARY CONTACT ASSEMBLY

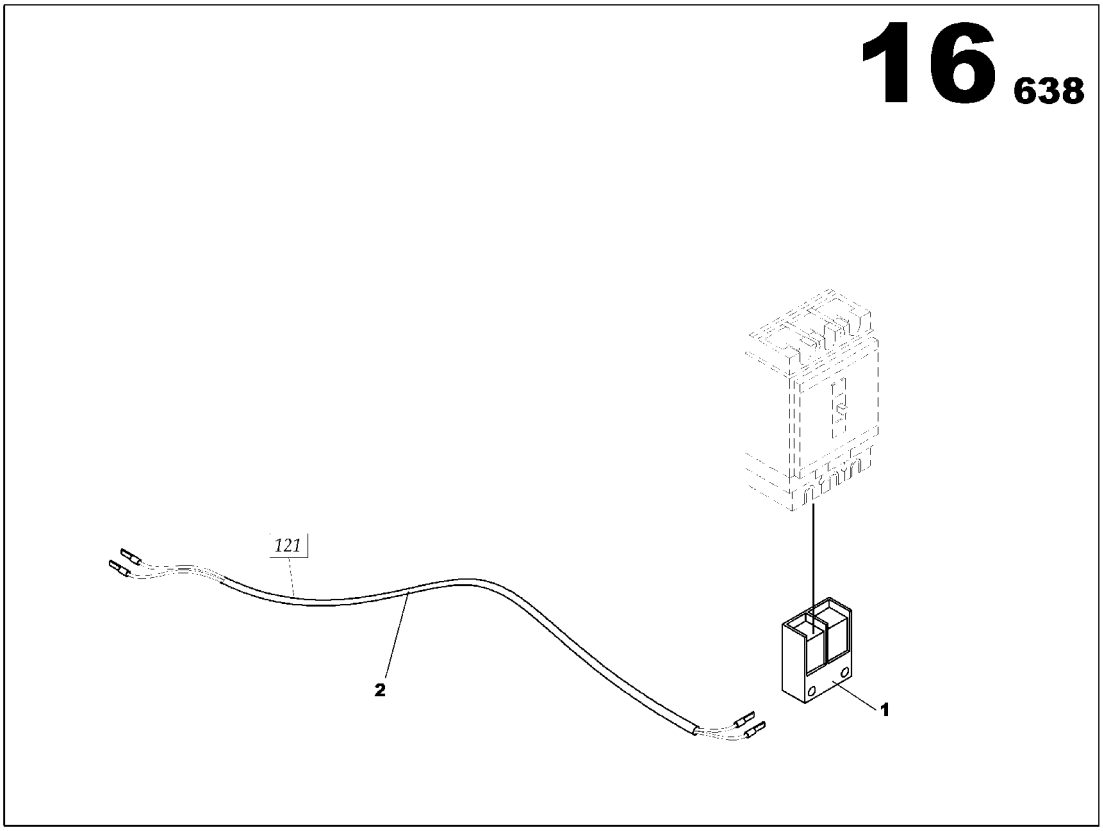

AUXILIARY CONTACT ASSEMBLY
17133075

Part numbers listed are only parts used in this model

Item	Part No.	Description	Qty	Un	From SN	To SN	Order PN	Page
1	17132820	INTELLISYS WIRING LOOM 121	1	UN			17132820	
2	85408581	AUXILARY CONTACT	1	UN			85408581	

INTELLISYS 016 WIRING LOOM ASSEMBLY JD 6081

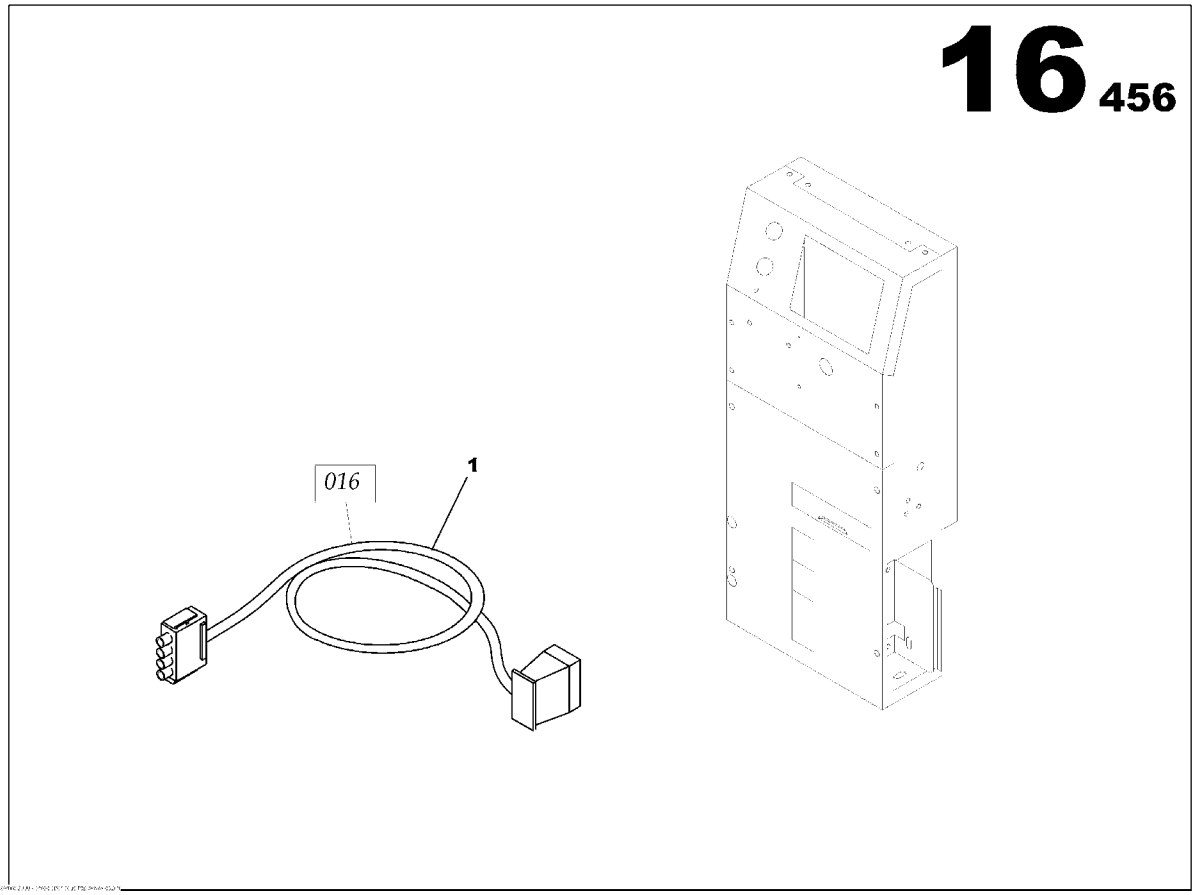

INTELLISYS 016 WIRING LOOM ASSEMBLY JD 6081
85635399

Part numbers listed are only parts used in this model

Item	Part No.	Description	Qty	Un	From SN	To SN	Order PN	Page
1	85635316	INTELLISYS WIRING LOOM 016	1	UN	02009106		85635316	

3 WAYS FUEL VALVES OPTION

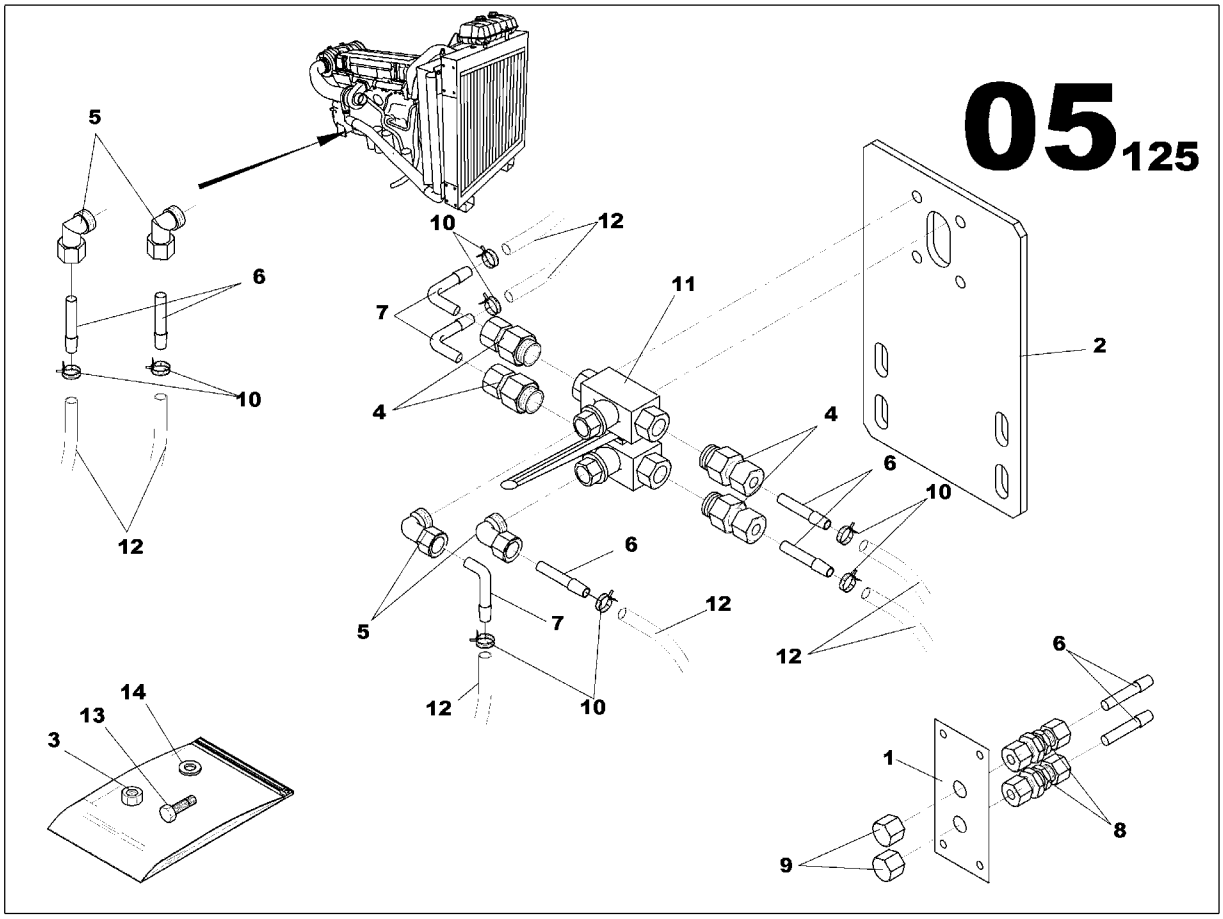

3 WAYS FUEL VALVES OPTION

Part numbers listed are only parts used in this model

Item	Part No.	Description	Qty	Un	From SN	To SN	Order PN	Page
1	17137456	3 WAYS FUEL VALVE ASSEMBLY	1	UN			17137456	235

3 WAYS FUEL VALVE ASSEMBLY

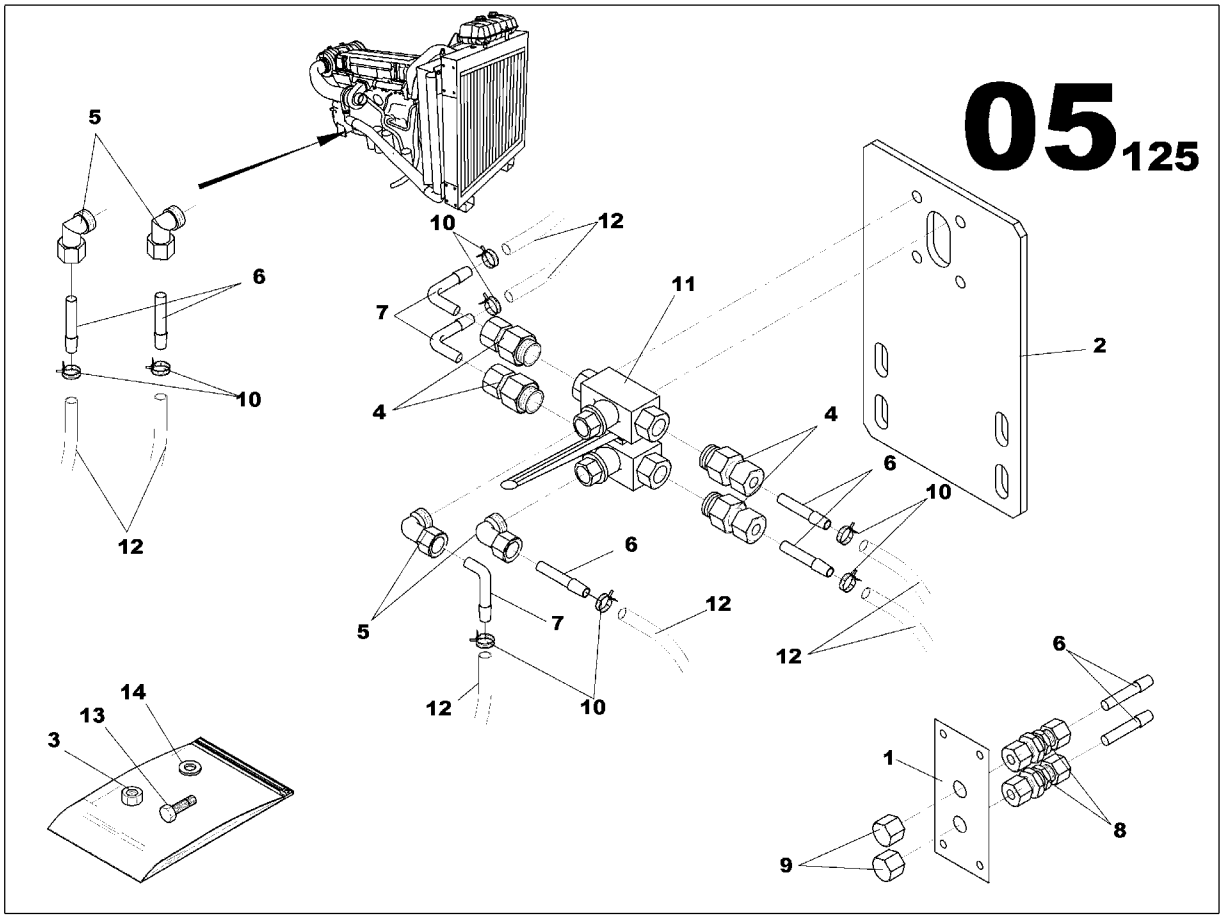

3 WAYS FUEL VALVE ASSEMBLY
17137456

Part numbers listed are only parts used in this model

Item	Part No.	Description	Qty	Un	From SN	To SN	Order PN	Page
1	17137449	3 WAYS FUEL VALVE ASSEMBLY	1	UN			17137449	237

3 WAYS FUEL VALVE ASSEMBLY

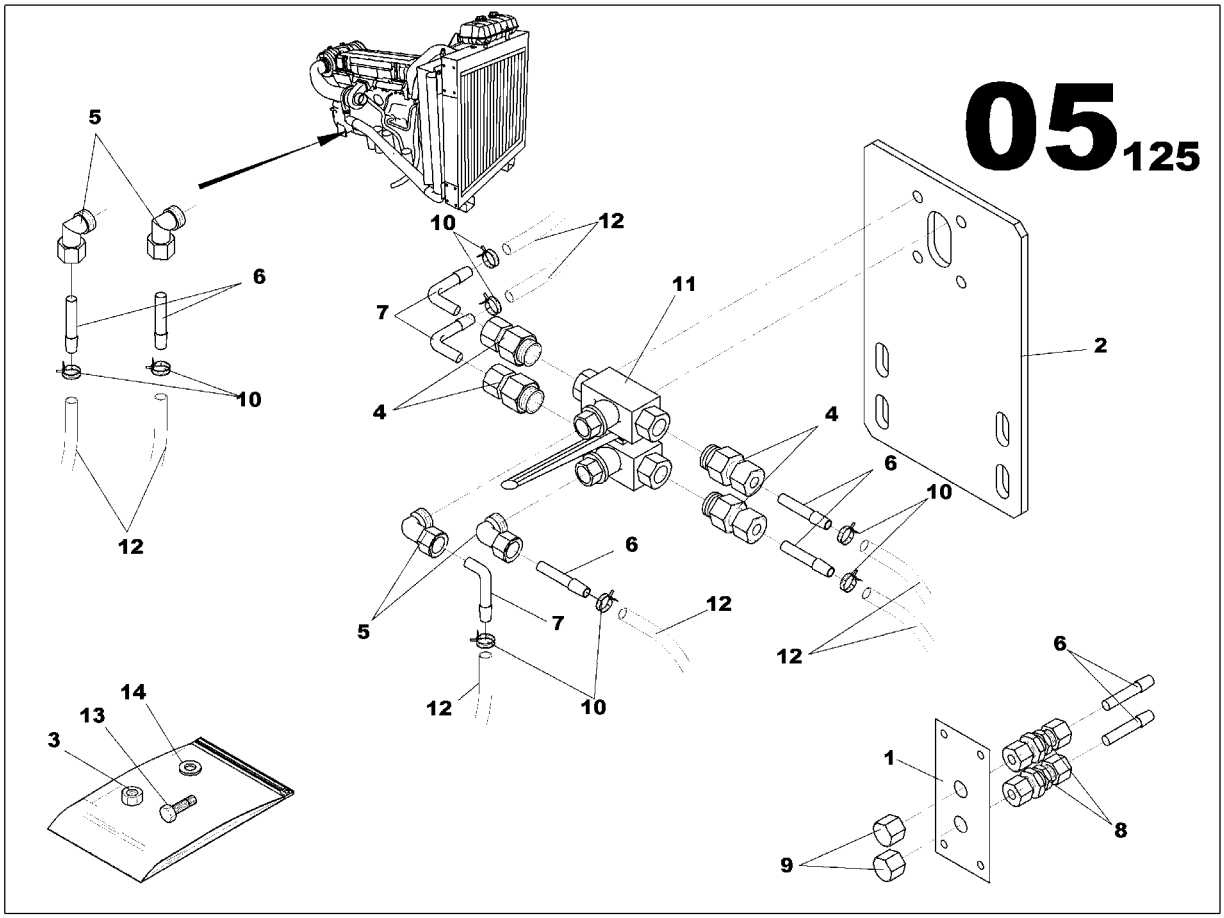

3 WAYS FUEL VALVE ASSEMBLY
17137449

Part numbers listed are only parts used in this model

Item	Part No.	Description	Qty	Un	From SN	To SN	Order PN	Page
1	85424174	EXTERIOR FILLING CONNECTION BRACKET	1	UN			85424174	
2	17137316	3 WAYS FUEL VALVE BRACKET	1	UN			17137316	
3	85429959	NUT M5	4	UN			85429959	
4	85430619	PIPE UNION REDUCER MAL/FEM 3/8G D10	4	UN			85430619	
5	85622660	PIPE UNION ELBOW 90° MAL/FEM 3/8G	4	UN			85622660	
6	85430627	PIPE UNION MAL/MAL D10	7	UN			85430627	
7	85430635	PIPE UNION ELBOW MAL/MAL D10	3	UN			85430635	
8	85423283	PIPE UNION FEM/FEM D10	2	UN			85423283	
9	85623007	PLUG D10	2	UN			85623007	
10	85509727	SPRING CLAMP D17/19	8	UN			85509727	
11	85631802	3 WAYS VALVE	1	UN			85631802	
12	85430643	FLEXIBLE HOSE D9x15	7.2	ML			85430643	
13	85632206	SCREW H M5x45	4	UN			85632206	
14	85429967	WASHER 5x12	8	UN			85429967	

REINFORCED INSULATION OPTION

REINFORCED INSULATION OPTION

Part numbers listed are only parts used in this model

Item	Part No.	Description	Qty	Un	From SN	To SN	Order PN	Page
1	85416634	ALTERNATOR LS 462VL	1	UN			85416634	

EXPLOSIVE ATHMOSPHERE OPTION

EXPLOSIVE ATHMOSPHERE OPTION

Part numbers listed are only parts used in this model

Item	Part No.	Description	Qty	Un	From SN	To SN	Order PN	Page
1	85418507	AIR SHUT OFF VALVE VO TWD1210-TAD12/16L ASSEMBLY	1	UN			85418507	243
2	85425080	SPARK ARRESTER INERIS DN175 ASSEMBLY	1	UN			85425080	247
3	17132796	INTELLISYS 021 WIRING LOOM ASSEMBLY JD 6081	1	UN			17132796	245

AIR SHUT OFF VALVE VO TWD1210-TAD12/16L ASSEMBLY

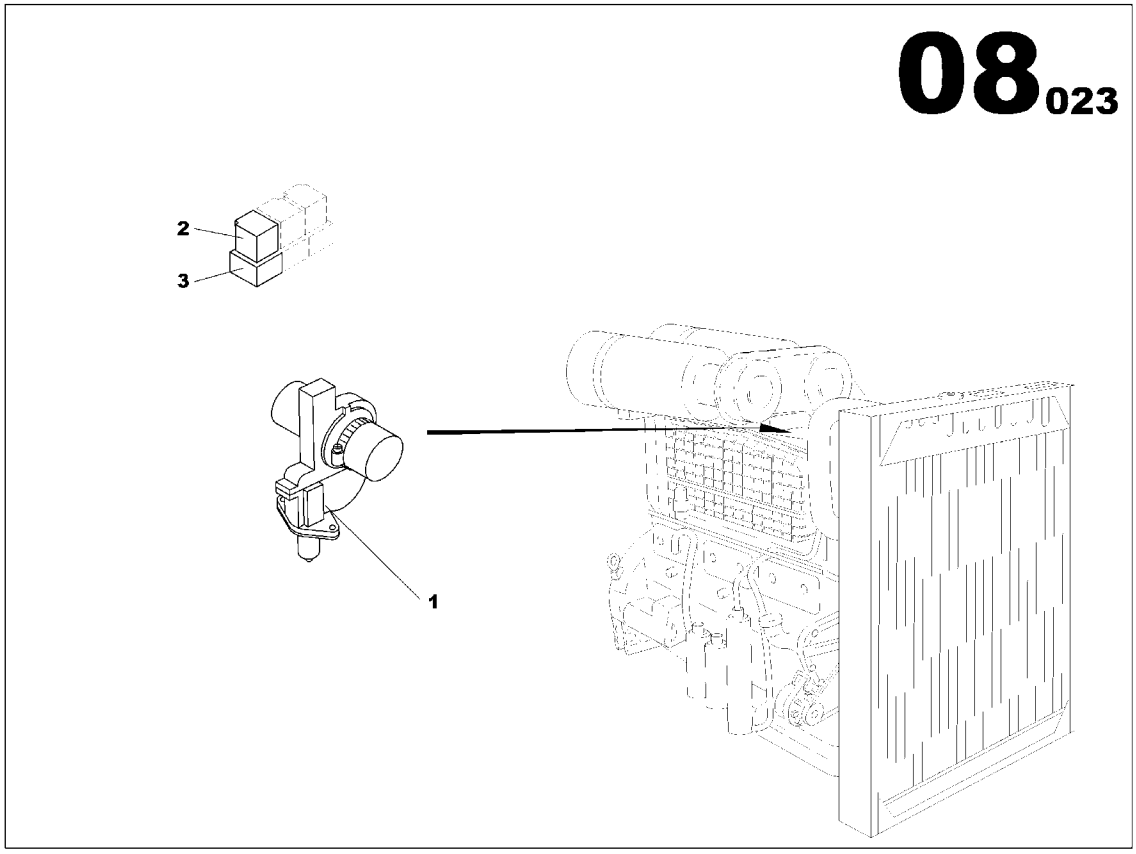

AIR SHUT OFF VALVE VO TWD1210-TAD12/16L ASSEMBLY 85418507

Part numbers listed are only parts used in this model

Item	Part No.	Description	Qty	Un	From SN	To SN	Order PN	Page
1	17137787	AIR SHUT OFF VALVE D76	1	UN			17137787	
2	85423366	RELAY 24V 10/20A	1	UN			85423366	
3	85408912	AUTOMOBILE RELAY BASE	1	UN			85408912	

INTELLISYS 021 WIRING LOOM ASSEMBLY JD 6081

INTELLISYS 021 WIRING LOOM ASSEMBLY JD 6081
17132796

Part numbers listed are only parts used in this model

Item	Part No.	Description	Qty	Un	From SN	To SN	Order PN	Page
1	17132804	INTELLISYS WIRING LOOM 021 EXTENSION	1	UN			17132804	

SPARK ARRESTER INERIS DN175 ASSEMBLY

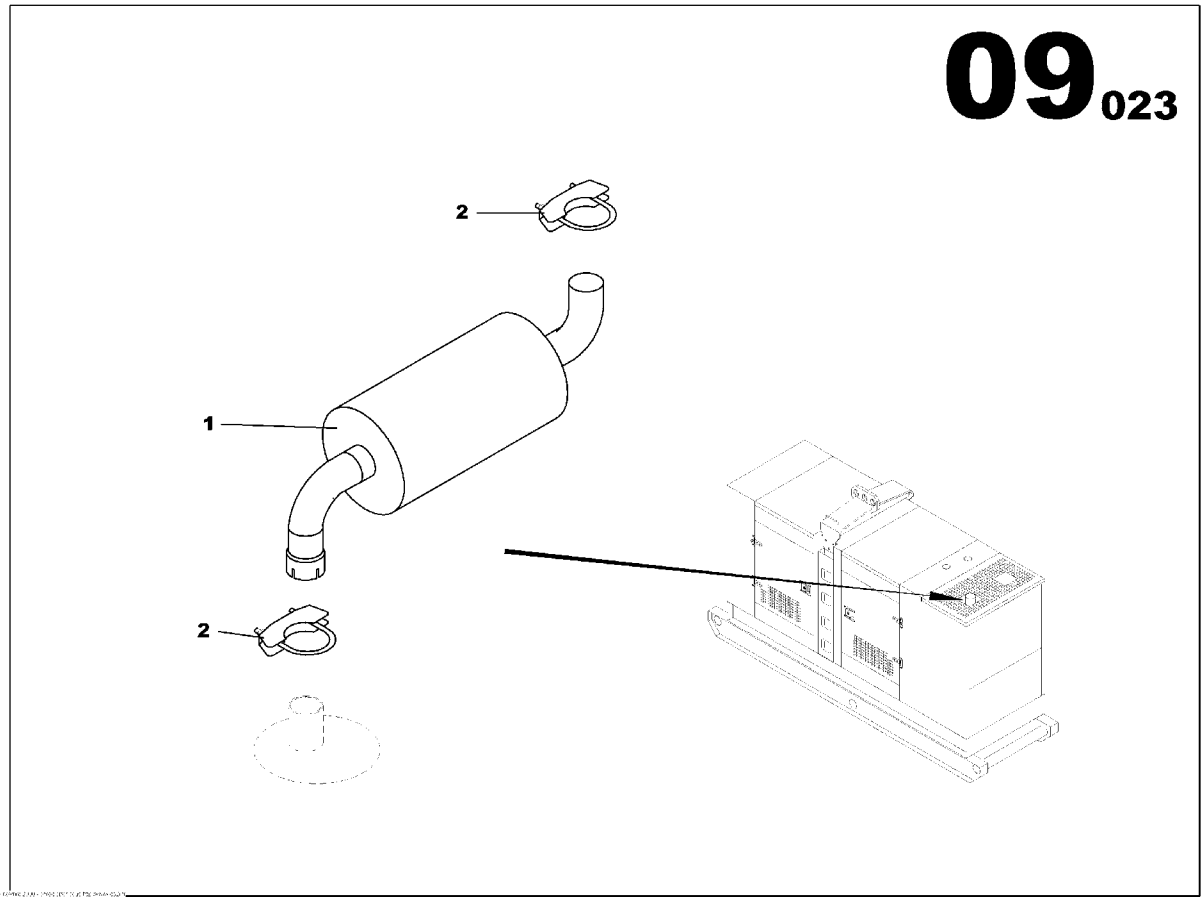

SPARK ARRESTER INERIS DN175 ASSEMBLY
85425080

Part numbers listed are only parts used in this model

Item	Part No.	Description	Qty	Un	From SN	To SN	Order PN	Page
1	85425098	INERIS SPARK ARRESTER DN125	1	UN			85425098	
2	85425106	HOSE CLAMP D203 ASSEMBLY	1	UN			85425106	249

HOSE CLAMP D203 ASSEMBLY

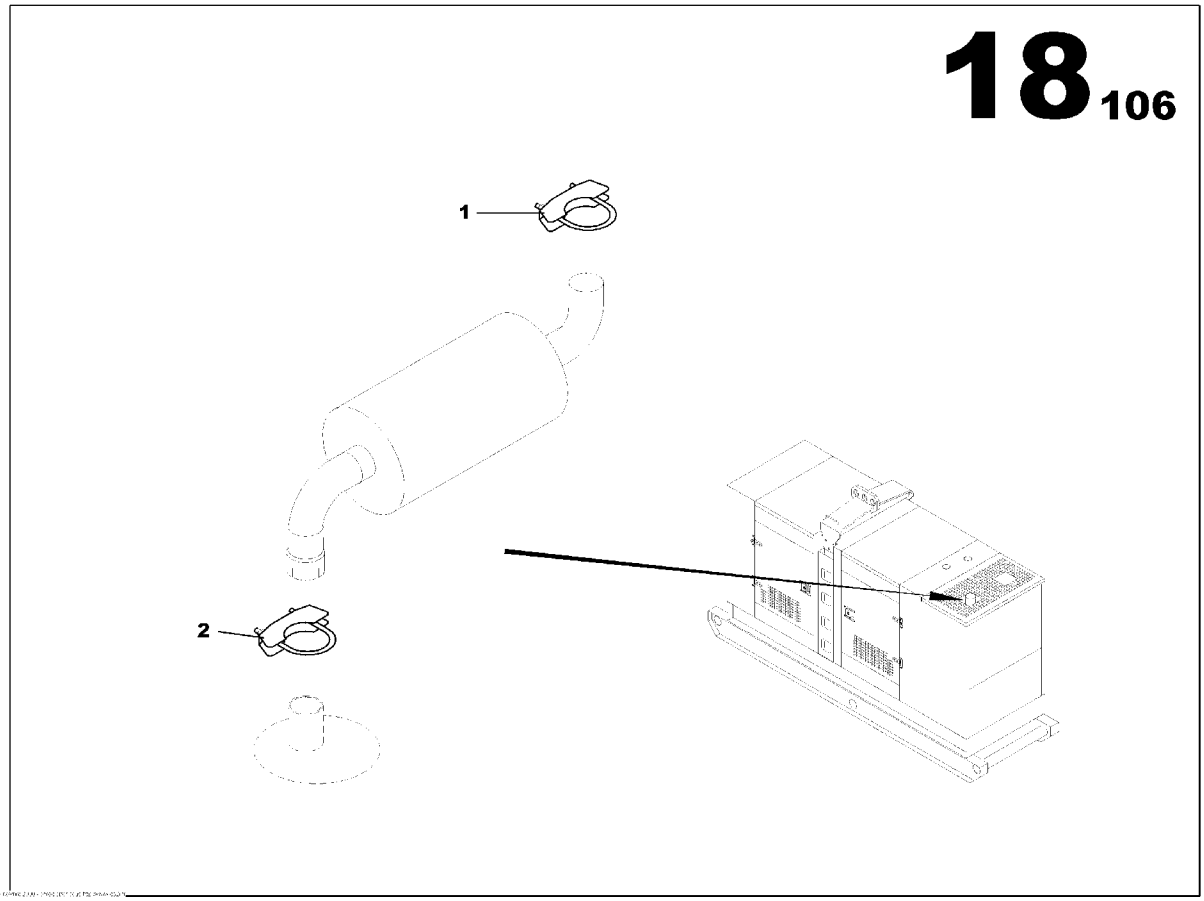

HOSE CLAMP D203 ASSEMBLY
85425106

Part numbers listed are only parts used in this model

Item	Part No.	Description	Qty	Un	From SN	To SN	Order PN	Page
1	85425114	BASE CLAMP D203	1	UN			85425114	
2	85425122	CLAMP D203	1	UN			85425122	

Index

Part number	Order number	Page
85623106	85623106	6
85416659	85416659	52
85416634	85416634	240
85421113	85421113	60
17137035	17137035	58
17137043	17137043	56
17137092	17137092	106
17137100	17137100	218
17137118	17137118	220
85430023	85430023	222
85629475	85629475	222
17137167	17137167	222
85424018	85424018	10
17137175	17137175	116
85422616	85422616	10
85501930	85501930	10
85623148	85623148	6
85403509	85403509	82
17137191	17137191	70
85424174	85424174	238
85403517	85403517	78
85629541	85629541	76
85421451	85421451	70
17131343	17131343	76
17137258	17137258	68
17137266	17137266	66
85633386	85633386	108
17137316	17137316	238
17137324	17137324	76
17130196	17130196	76

Part number	Order number	Page
17137423	17137423	74
17137431	17137431	66
17137449	17137449	236
17137456	17137456	234
17137530	17137530	20
17137548	17137548	18
85637437	85637437	22
17137571	17137571	22
85403707	85403707	90
85424331	85424331	90
85417814	85417814	90
85403723	85403723	90
17131509	17131509	90
17141110	17141110	90
85416568	17141110	90
17137712	17137712	88
17137720	17137720	86
85413581	85413581	14
85417699	85417699	14
85417541	85417541	16
85417541	85417541	14
85421444	85421444	14
85418507	85418507	242
85623171	85623171	6
85623189	85623189	14
17137779	17137779	116
17137787	17137787	244
85423614	85423614	100
85425098	85425098	248
85425080	85425080	242

Part number	Order number	Page
85496933	85496933	100
85622256	85622256	100
17137811	17137811	94
17137829	17137829	128
17137886	17137886	128
85626927	85626927	92
17137936	17137936	100
17137944	17137944	100
17137951	17137951	98
17137969	17137969	92
17137993	17137993	100
85404572	85404572	82
85404580	85404580	76
85417459	85417459	84
85427391	85427391	6
17138017	17138017	76
85423978	85423978	106
17138033	17138033	106
17138132	17138132	114
17138140	17138140	112
17138157	17138157	104
17138165	17138165	102
85401875	85401875	106
85497238	85497238	64
85497253	85497253	64
85497261	85497261	64
85497279	85497279	64
85497295	85497295	64
17138215	17138215	60
85623320	85623320	64

Index

Part number	Order number	Page
85623338	85623338	64
85623346	85623346	64
85623353	85623353	64
17138306	17138306	96
17138314	17138314	96
17138322	17138322	96
85497360	85497360	106
17138363	17138363	106
17138389	17138389	106
17138397	17138397	106
85497386	85497386	128
17138439	17138439	106
85424513	85424513	100
17138538	17138538	128
17138546	17138546	128
17138553	17138553	128
17138561	17138561	128
17138579	17138579	128
17138587	17138587	128
17138595	17138595	128
17138686	17138686	128
17138694	17138694	128
17138777	17138777	128
17138785	17138785	132
17138793	17138793	132
17138819	17138819	128
17138827	17138827	128
17138850	17138850	142
17138868	17138868	126
17138876	17138876	112

Part number	Order number	Page
17138991	17138991	128
17139007	17139007	128
17139015	17139015	128
17139023	17139023	128
17139031	17139031	128
17139049	17139049	128
17139056	17139056	128
17139064	17139064	128
17139080	17139080	120
17139189	17139189	120
17139197	17139197	116
17139247	17139247	128
17139254	17139254	128
17139320	17139320	128
17139346	17139346	128
17139387	17139387	128
17139395	17139395	128
17139460	17139460	134
17139486	17139486	112
17139494	17139494	132
17139528	17139528	134
85406130	85406130	144
85406155	85406155	128
85406189	85406189	128
85630515	85630515	150
85509305	85509305	128
17139544	17139544	144
17139551	17139551	144
17139569	17139569	144
85417186	85417186	128

Part number	Order number	Page
85406213	85406213	128
85492460	85492460	128
85509263	85509263	108
17139577	17139577	128
17139585	17139585	130
17139593	17139593	130
17139627	17139627	130
17139635	17139635	130
17139650	17139650	130
85417293	85417293	90
85417244	85417244	90
85417202	85417202	90
85406460	85406460	122
17135690	17135690	170
17139676	17139676	192
17132192	17132192	202
17132192	17132192	192
85416915	85416915	202
85423788	85423788	34
85634517	85634517	170
85634517	85634517	164
85638294	85638294	164
85638310	85638310	174
85638310	85638310	172
85638310	85638310	164
85634582	85634582	174
85634582	85634582	172
85634582	85634582	164
85638328	85638328	164
85634616	85634616	112

Index

Part number	Order number	Page
85638336	85638336	162
17132200	17132200	140
85638377	85638377	24
85638385	85638385	24
17132218	17132218	106
17139684	17139684	196
17132325	17132325	84
17139692	17139692	84
17139726	17139726	106
85638476	85638476	170
85638476	85638476	164
85638492	85638492	170
85638492	85638492	164
85638534	85638534	46
17139809	17139809	116
17132424	17132424	138
17139858	17139858	194
17139866	17139866	186
17139882	17139882	194
85638583	85638583	44
85638591	85638591	42
17139957	17139957	184
17139965	17139965	194
17139981	17139981	144
17140047	17140047	194
17140054	17140054	192
17140062	17140062	184
17140096	17140096	196
17132457	17132457	202
17140112	17140112	106

Part number	Order number	Page
17140120	17140120	106
17140146	17140146	196
17140153	17140153	196
17140161	17140161	194
17140179	17140179	144
17140187	17140187	142
17140195	17140195	138
17140203	17140203	184
85638690	85638690	36
85635217	85635217	38
85407906	85407906	112
85407922	85407922	116
85638708	85638708	30
85499309	85499309	34
85408078	85408078	34
85428100	85428100	34
85635308	85635308	182
17132796	17132796	242
17132804	17132804	246
85410942	85410942	180
85411437	85411437	18
17132812	17132812	216
85635316	85635316	232
17132820	17132820	230
85408227	85408227	136
85504017	85504017	174
85504017	85504017	172
17135708	17135708	174
17135708	17135708	172
85630663	85630663	228

Part number	Order number	Page
85503993	85503993	156
85630721	85630721	228
17140252	17140252	34
85636959	85636959	160
85504033	85504033	150
85635399	85635399	218
17132846	17132846	178
85635415	85635415	178
85499499	85499499	186
17140278	17140278	32
17140286	17140286	34
85638849	85638849	202
17140310	17140310	186
85638971	85638971	32
85635704	85635704	36
85635712	85635712	32
17140443	17140443	22
17140476	17140476	30
17140484	17140484	30
17140492	17140492	30
17140526	17140526	30
17140534	17140534	186
17140542	17140542	186
17140559	17140559	186
17140567	17140567	186
85408334	85408334	136
85408391	85408391	164
85623833	85623833	34
85502235	85502235	90
17133018	17133018	202

Index

Part number	Order number	Page
85417913	85417913	202
85408573	85408573	216
85408581	85408581	230
85408599	85408599	170
85504223	85504223	156
85408615	85408615	170
85408664	85408664	30
85408706	85408706	28
85412542	85412542	28
85415388	85415388	30
85408854	85408854	170
85423366	85423366	34
85423366	85423366	28
85423366	85423366	244
85413292	85413292	34
85408912	85408912	34
85408912	85408912	28
85408912	85408912	244
85423374	85423374	34
85412989	85412989	28
85412997	85412997	28
85427268	85427268	38
85639029	85639029	202
85427276	85427276	38
85427029	85427029	40
85426112	85426112	154
85426112	85426112	152
85639045	85639045	28
85426138	85426138	154
85426138	85426138	152

Part number	Order number	Page
85426146	85426146	154
85426146	85426146	152
85499754	85499754	46
85499754	85499754	186
85426120	85426120	154
85426120	85426120	152
85639052	85639052	30
85639060	85639060	28
85623809	85623809	228
85635886	85635886	202
85635894	85635894	164
85635902	85635902	170
85635902	85635902	164
85505154	85505154	154
85505154	85505154	152
85626828	85626828	176
17133067	17133067	214
17135716	17135716	172
17133687	17133687	174
85631422	85631422	174
85631422	85631422	172
17133075	17133075	218
17133083	17133083	184
17133109	17133109	204
17133117	17133117	202
17135039	17135039	202
17133125	17133125	202
85636991	85636991	150
85627198	85636991	150
17133133	17133133	202

Part number	Order number	Page
85411569	85411569	148
85636140	85636140	158
17133166	17133166	148
85636173	85636173	218
17140724	17140724	218
17133174	17133174	148
17140732	17140732	218
17140740	17140740	148
85636256	85636256	218
17140757	17140757	148
17135724	17135724	168
85639292	85639292	166
17140765	17140765	162
17140781	17140781	148
85423119	85423119	12
85423218	85423218	224
85421204	85421204	224
85421204	85421204	10
85409068	85409068	82
85409076	85409076	82
85425114	85425114	250
85409084	85409084	202
85409126	85409126	202
85424901	85424901	12
85409175	85409175	144
85409191	85409191	136
85639318	85639318	188
85639318	85639318	48
85429744	85429744	196
85429553	85429553	190

Index

Part number	Order number	Page
85429553	85429553	50
85429553	85429553	206
85429959	85429959	238
85507911	85507911	200
85507911	85507911	188
85507911	85507911	212
85507911	85507911	214
85507911	85507911	48
85507911	85507911	204
85507911	85507911	210
85507911	85507911	208
85509743	85509743	200
85430585	85430585	26
17133240	17133240	196
85430296	85430296	224
85409225	85409225	144
85409233	85409233	144
85409241	85409241	144
85636363	85636363	206
85636363	85636363	190
85636363	85636363	50
85636371	85636371	200
17130766	17130766	170
85636389	85636389	204
85636389	85636389	198
85636389	85636389	196
85636389	85636389	190
85636389	85636389	170
85636389	85636389	26
85636389	85636389	214
85636389	85636389	50
85636389	85636389	212
85636389	85636389	208
85631547	85631547	26
85636454	85636454	202
85639383	85639383	46
85639383	85639383	186
17140880	17140880	194
17140898	17140898	194
17140922	17140922	222
85639417	85639417	46
85639417	85639417	186
85639425	85639425	24
17133257	17133257	196
17133265	17133265	202
17133273	17133273	202
17133281	17133281	202
17133299	17133299	202
85509222	85509222	78
85415701	85415701	62
85430254	85430254	224
85409258	85409258	62
85622967	85622967	12
85622967	85622967	10
17140955	17140955	118
85430619	85430619	238
85622660	85622660	238
85507937	85507937	70
85507945	85507945	70
85430627	85430627	238
85430635	85430635	238
85409308	85409308	62
85423093	85423093	10
85423044	85423044	10
17140971	17140971	118
85423283	85423283	238
85623007	85623007	238
85631729	85631729	76
85631737	85631737	76
17140989	17140989	94
85417780	85417780	100
85501880	85501880	16
85409423	85409423	12
85409423	85409423	10
85409423	85409423	224
85425122	85425122	250
85425254	85425254	14
85417723	85417723	14
17130816	17130816	80
85425106	85425106	248
85504207	85504207	160
85504207	85504207	156
17130824	17130824	80
85509727	85509727	238
85509727	85509727	76
85509727	85509727	70
85631786	85631786	76
85410298	85410298	62
85425551	85425551	72
85507952	85507952	70

Index

Part number	Order number	Page
85421758	85421758	12
85421741	85421741	12
17133349	17133349	124
17133349	17133349	124
17141003	17141003	116
85416451	85416451	62
85424885	85424885	12
85631802	85631802	238
85416436	85416436	80
85430643	85430643	238
85424844	85424844	224
85623676	85623676	14
85629392	85629392	12
85629392	85629392	10
85506467	85506467	108
85501799	85501799	102
85500213	85500213	110
85503860	85503860	108
85623684	85623684	110
85631927	85631927	108
17135732	17135732	172
85639565	85639565	162
22207054	22207054	108
17135740	17135740	174
85639573	85639573	146
85639599	85639599	138
85639680	85639680	208
85636660	85636660	196
85636660	85636660	170
85636660	85636660	164

Part number	Order number	Page
85402170	85402170	8
85401891	85401891	8
85401990	85401990	8
85401370	85401370	8
85401594	85401594	8
85627271	85627271	8
85402139	85402139	8
85401628	85401628	8
85402162	85402162	8
85426203	85426203	8
85401404	85401404	8
85425825	85425825	8
85426104	85426104	8
85426096	85426096	8
85426088	85426088	8
85627297	85627297	8
85627347	85627347	8
17141359	17141359	8
85425577	85425577	54
85402444	85402444	54
85426179	85426179	54
85425957	85425957	54
85508828	85508828	54
85508877	85508877	54
85508919	85508919	54
85508976	85508976	54
85509016	85509016	54
85509065	85509065	54
85509123	85509123	54
85401354	85401354	16

Part number	Order number	Page
85401339	85401339	16
85501229	85501229	16
85501294	85501294	16
85401644	85401644	72
85503019	85503019	72
85503001	85503001	72
85502995	85502995	72
85502987	85502987	72
85502979	85502979	72
85502961	85502961	72
85502953	85502953	72
85502946	85502946	72
85502599	85502599	72
85502581	85502581	72
85502557	85502557	72
85402519	85402519	170
85504090	85504090	166
85504264	85504264	160
85504199	85504199	174
85504199	85504199	172
85504215	85504215	160
85504215	85504215	156
17135476	17135476	170
17135484	17135484	170
85639821	85639821	170
85639839	85639839	168
85425916	85425916	54
85636694	85636694	164
17130006	17130006	28
85632198	85632198	134

Index

Part number	Order number	Page
85632206	85632206	238
17131160	17131160	26
85410140	85410140	196
85636728	85636728	190
85636728	85636728	206
85636728	85636728	50
85429967	85429967	26
85429967	85429967	238
85636736	85636736	188
85636736	85636736	210
85636736	85636736	214
85636736	85636736	212
85636736	85636736	208
85636736	85636736	48
85429793	85429793	204
85429793	85429793	200
85636751	85636751	200
85430213	85430213	196
85430270	85430270	224
85429728	85429728	26
85632222	85632222	134

Part number	Order number	Page	Part number	Order number	Page