INGERSOLL-RAND

G440

PARTS MANUAL

17135641

Doosan purchased Bobcat Company from Ingersoll-Rand Company in 2007. Any reference to Ingersoll-Rand Company or use of trademarks, service marks, logos, or other proprietary identifying marks belonging to Ingersoll-Rand Company in this manual is historical or nominative in nature, and is not meant to suggest a current affiliation between Ingersoll-Rand Company and Doosan Company or the products of either.

G440 EDITION:05/08/2004

33519017901_0_1

Revised (01-13)

AFTERMARKET - 50 Hertz Generators

For more information on how to order parts or information regarding your local distributor (Europe, Middle East, Africa) please contact:

Facility Details **Coordonnées du Site** **Unternehmensdetails** **Dirección**	Ingersoll-Rand European Sales Ltd Portable Power Paragon Business Park Chorley New Road, Horwich Bolton BL6 6JN United Kingdom
Telephone **Téléphone** **Telefon** **Teléfono**	+44 (0) 1204 690 690
Fax	+44 (0) 1204 690 366
Emergency order phone **Numéro d'urgence pour commandes** **Dringende Aufträge, Telefon** **Teléfono de pedidos de urgencia**	+44 (0) 777 6170921
Office hours **Heures d'ouverture** **Bürostunden** **Horas de oficina**	Mon-Fri 8:00am to 4:30pm (GMT)

Telephone contact directory
Numéros des contacts
Telefonkontaktverzeichnis
Teléfonos de contacto

Harry Dale Aftermarket Marketing Manager	+44 (0) 1204 690 541
Malcolm Stott Marketing Analyst	+44 (0) 1204 690 396
Ian Parr Parts Co-ordinator	+44 (0) 1204 690 465
Howard Connolly Parts Co-ordinator	+44 (0) 1204 690 641
Martin James Parts Co-ordinator MEA	+44 (0) 1204 690 329

Imprimé avec FinePrint 2000 - enregistrer sous http://www.gs2.fr

G440

G440

Part numbers listed are only parts used in this model

Item	Part No.	Description	Qty	Un	From SN	To SN	Order PN	Page
1		G440 *-Basic Version*	1	UN				3
2		AUTO START OPTION	1	UN				209
3		REINFORCED INSULATION OPTION	1	UN				223
4		EXPLOSIVE ATHMOSPHERE OPTION	1	UN				227
5		3 WAYS FUEL VALVES OPTION	1	UN				235

G440

G440

Part numbers listed are only parts used in this model

Item	Part No.	Description	Qty	Un	From SN	To SN	Order PN	Page
1		ENGINE FUNCTION	1	UN				5
2		ALTERNATOR FUNCTION	1	UN				31
3		COOLER FUNCTION	1	UN				45
4		FUEL FUNCTION	1	UN				53
5		STARTING FUNCTION	1	UN				73
6		EXHAUST FUNCTION	1	UN				79
7		FRAME FUNCTION	1	UN				87
8		CANOPY FUNCTION	1	UN				97
9		ELECTRICAL FUNCTION	1	UN				123
10		DOCUMENTATION OPTION	1	UN				207

ENGINE FUNCTION

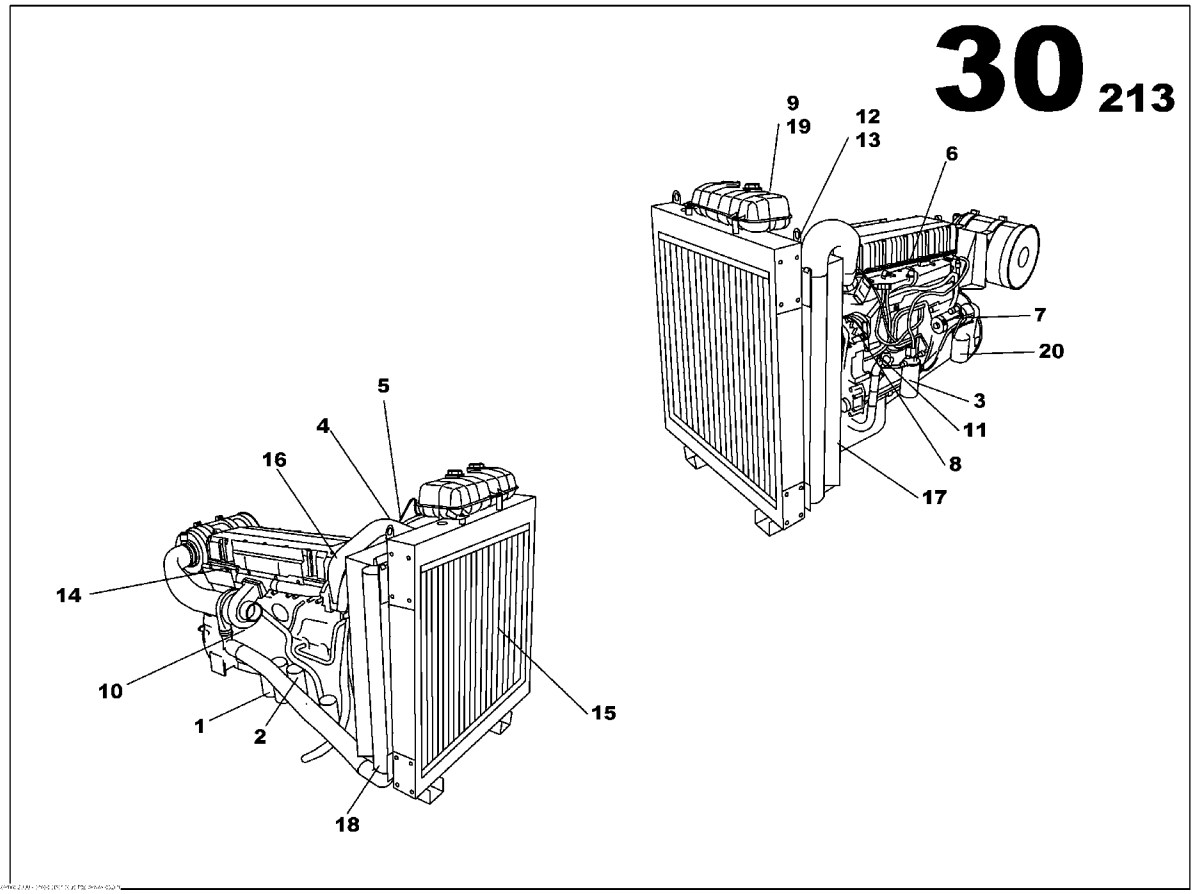

ENGINE FUNCTION

Part numbers listed are only parts used in this model

Item	Part No.	Description	Qty	Un	From SN	To SN	Order PN	Page
1	85628444	ENGINE VOLVO TAD1242 SAE 1/14	1	UN			85628444	7
2	85629525	OIL SUMP DRAIN PUMP ASSEMBLY	1	UN			85629525	9
3	85629756	AIR FILTER HEAVY DUTY ASSEMBLY	1	UN			85629756	13
4	85629939	TRANS. WATER TEMPERATURE-OIL PRESSURE ASSEMBLY	1	UN			85629939	17
5		SPEED CONTROL FUNCTION	1	UN				19
6		ENGINE WIRING FUNCTION	1	UN				21

ENGINE VOLVO TAD1242 SAE 1/14

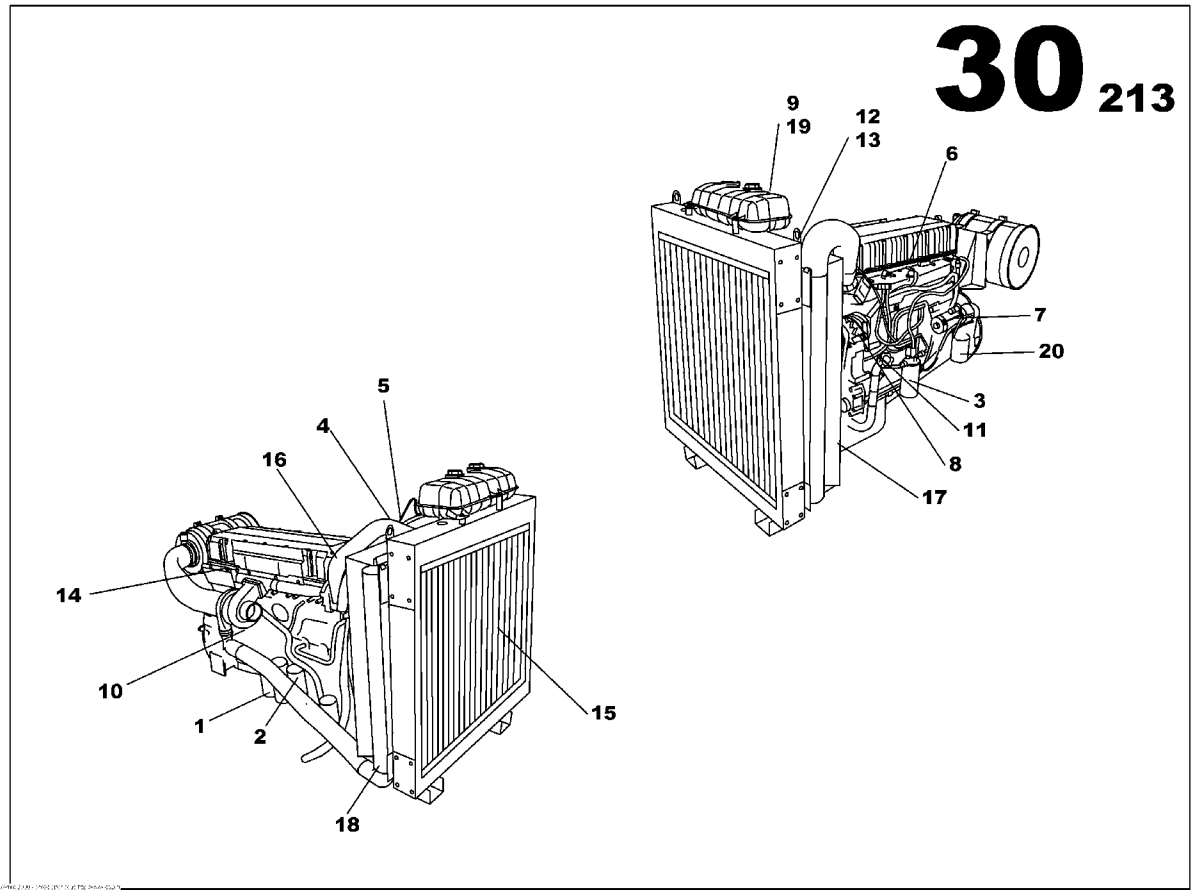

ENGINE VOLVO TAD1242 SAE 1/14
85628444

Part numbers listed are only parts used in this model

Item	Part No.	Description	Qty	Un	From SN	To SN	Order PN	Page
1	85401891	LUBE OIL FILTER	2	UN			85401891	
2	85426864	LUBE OIL FILTER	1	UN			85426864	
3	85627016	FUEL FILTER	2	UN			85627016	
4	85627313	FAN BELT	1	UN			85627313	
5	85627321	ALTERNATOR BELT	1	UN			85627321	
6	85628378	COMPLETE INJECTOR	6	UN			85628378	
7	85627339	ELECTRIC STARTER	1	UN			85627339	
8	85628386	CHARGING ALTERNATOR	1	UN			85628386	
9	85632024	WATER PUMP KIT	1	UN			85632024	
10	85627289	PRESSURE SWITCH	1	UN			85627289	
11	85402139	TEMPERATURE SWITCH	1	UN			85402139	
12	85402162	THERMOSTAT	1	UN			85402162	
13	85402170	GASKET - THERMOSTAT	1	UN			85402170	
14	85627305	ROCKER COVER GASKET	1	UN			85627305	
15	85628402	RADIATOR	1	UN			85628402	
16	85628410	RADIATOR HOSE	1	UN			85628410	
17	85628428	RADIATOR HOSE	1	UN			85628428	
18	85628436	AIR COOLER	1	UN			85628436	
19	85632032	WATER PUMP SEAL	1	UN			85632032	
20	85632040	ENGINE CONTROLER	1	UN			85632040	

OIL SUMP DRAIN PUMP ASSEMBLY

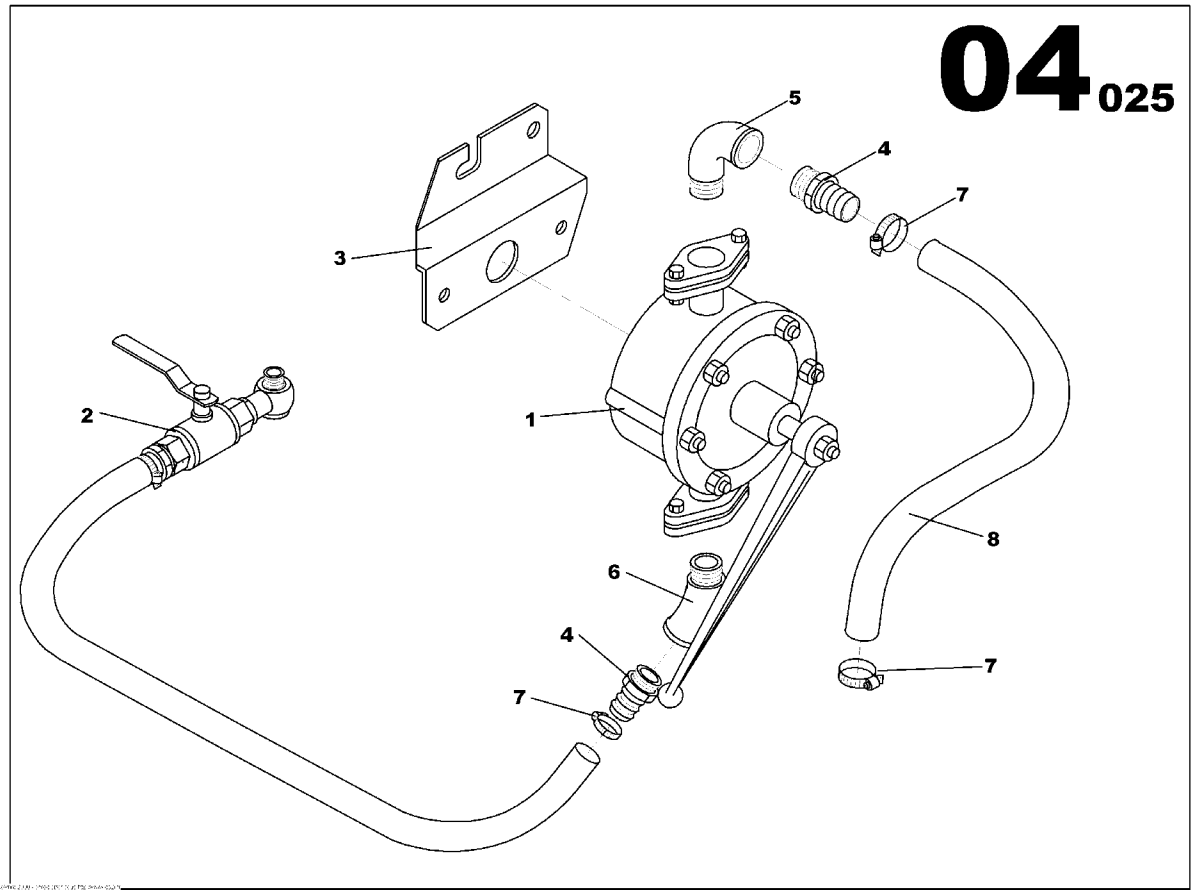

OIL SUMP DRAIN PUMP ASSEMBLY
85629525

Part numbers listed are only parts used in this model

Item	Part No.	Description	Qty	Un	From SN	To SN	Order PN	Page
1	85422616	HYDRAULIC MANUAL PUMP	1	UN			85422616	
2	85501930	OIL SUMP DRAIN TAP ASSEMBLY	1	UN			85501930	11
3	85629517	OIL SUMP PUMP BRACKET VO TAD 12L	1	UN			85629517	
4	85622967	PIPE UNION MAL/MAL 3/4G	2	UN			85622967	
5	85423093	PIPE UNION ELBOW 90° MAL/FEM 3/4G	1	UN			85423093	
6	85423044	PIPE UNION ELBOW 45° MAL/FEM 3/4G	1	UN			85423044	
7	85629392	FLEXIBLE HOSE D25x31	0.6	ML			85629392	
8	85409423	HOSE CLIP D20/32	2	UN			85409423	

OIL SUMP DRAIN TAP ASSEMBLY

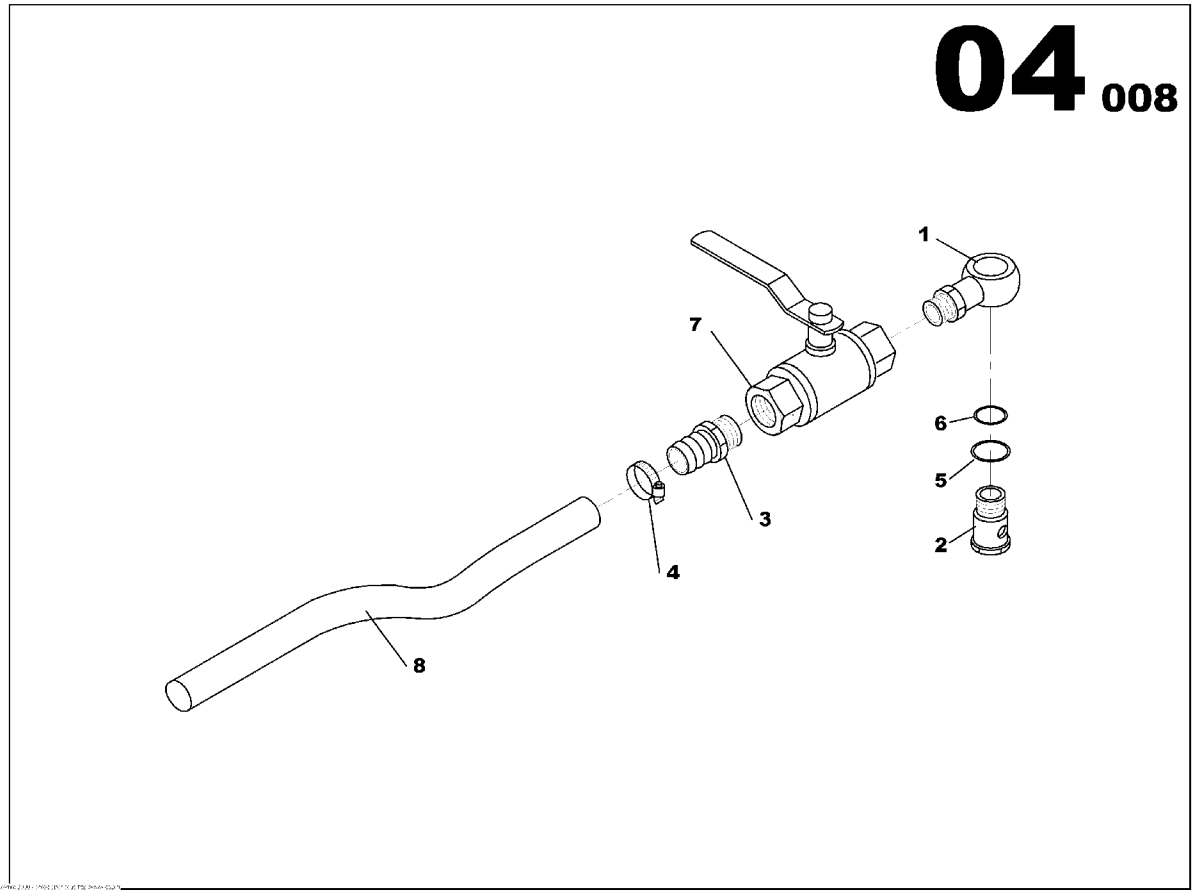

OIL SUMP DRAIN TAP ASSEMBLY
85501930

Part numbers listed are only parts used in this model

Item	Part No.	Description	Qty	Un	From SN	To SN	Order PN	Page
1	85424901	BANJO SCREW M24x1.5 L45	1	UN			85424901	
2	85423119	PIPE UNION BANJO D25.3 - 3/4G	1	UN			85423119	
3	85409423	HOSE CLIP D20/32	1	UN			85409423	
4	85629392	FLEXIBLE HOSE D25x31	1.5	ML			85629392	
5	85622967	PIPE UNION MAL/MAL 3/4G	1	UN			85622967	
6	85421758	GASKET D26x32	1	UN			85421758	
7	85421741	GASKET D24x32	1	UN			85421741	
8	85424885	2 WAYS VALVE	1	UN			85424885	

AIR FILTER HEAVY DUTY ASSEMBLY

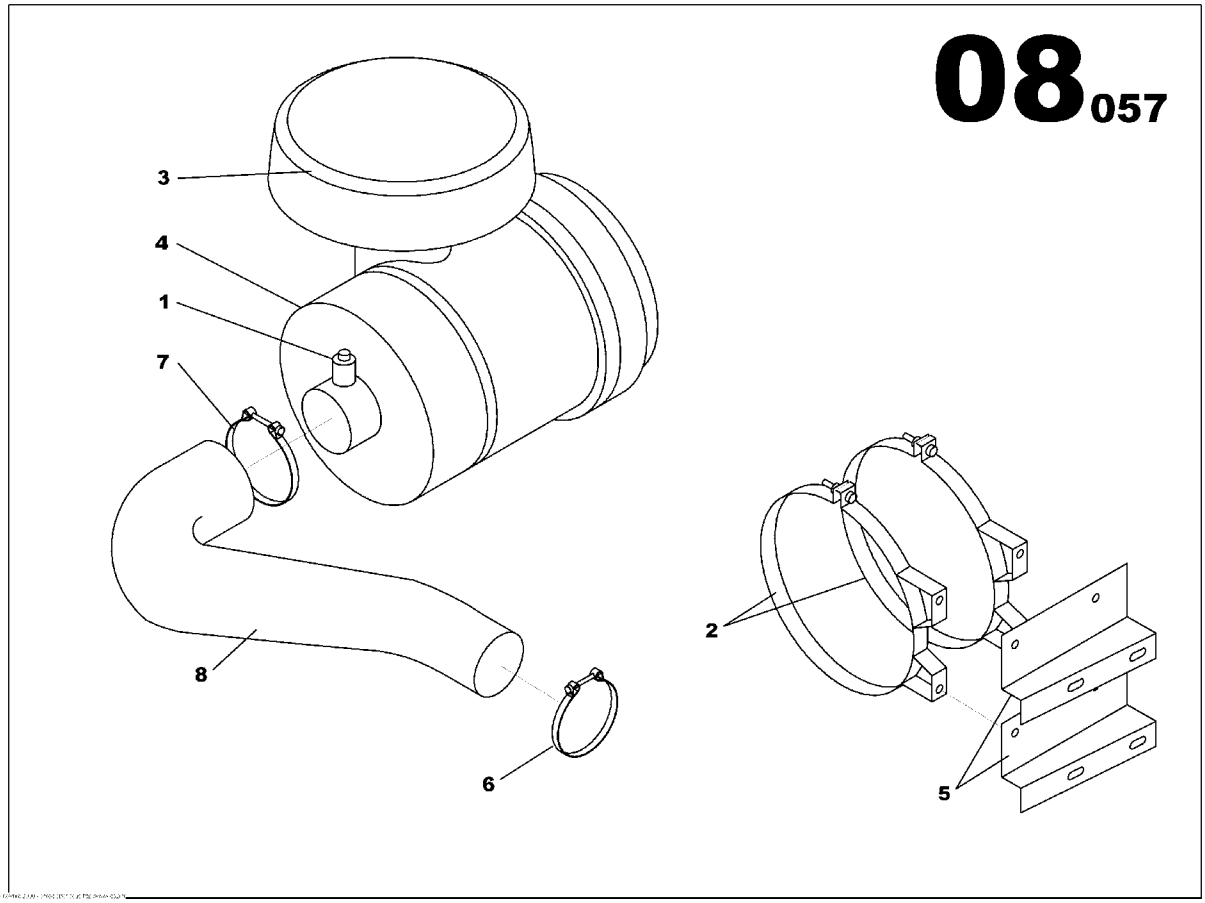

AIR FILTER HEAVY DUTY ASSEMBLY
85629756

Part numbers listed are only parts used in this model

Item	Part No.	Description	Qty	Un	From SN	To SN	Order PN	Page
1	85413581	AIR RESTRICTION INDICATOR	1	UN			85413581	
2	85417699	AIR CLEANER CLAMP D381	2	UN			85417699	
3	85417541	RAIN CAP	1	UN			85417541	
4	85421444	AIR FILTER HEAVY DUTY	1	UN			85421444	15
5	85629749	AIR FILTER BRACKET VO TAD 12L	2	UN			85629749	
6	85425254	T BOLT CLAMP D113/121	1	UN			85425254	
7	85417723	T BOLT CLAMP D162/174	1	UN			85417723	
8	85631851	RUBBER HOSE ELBOW D101,5	1	UN			85631851	

AIR FILTER HEAVY DUTY

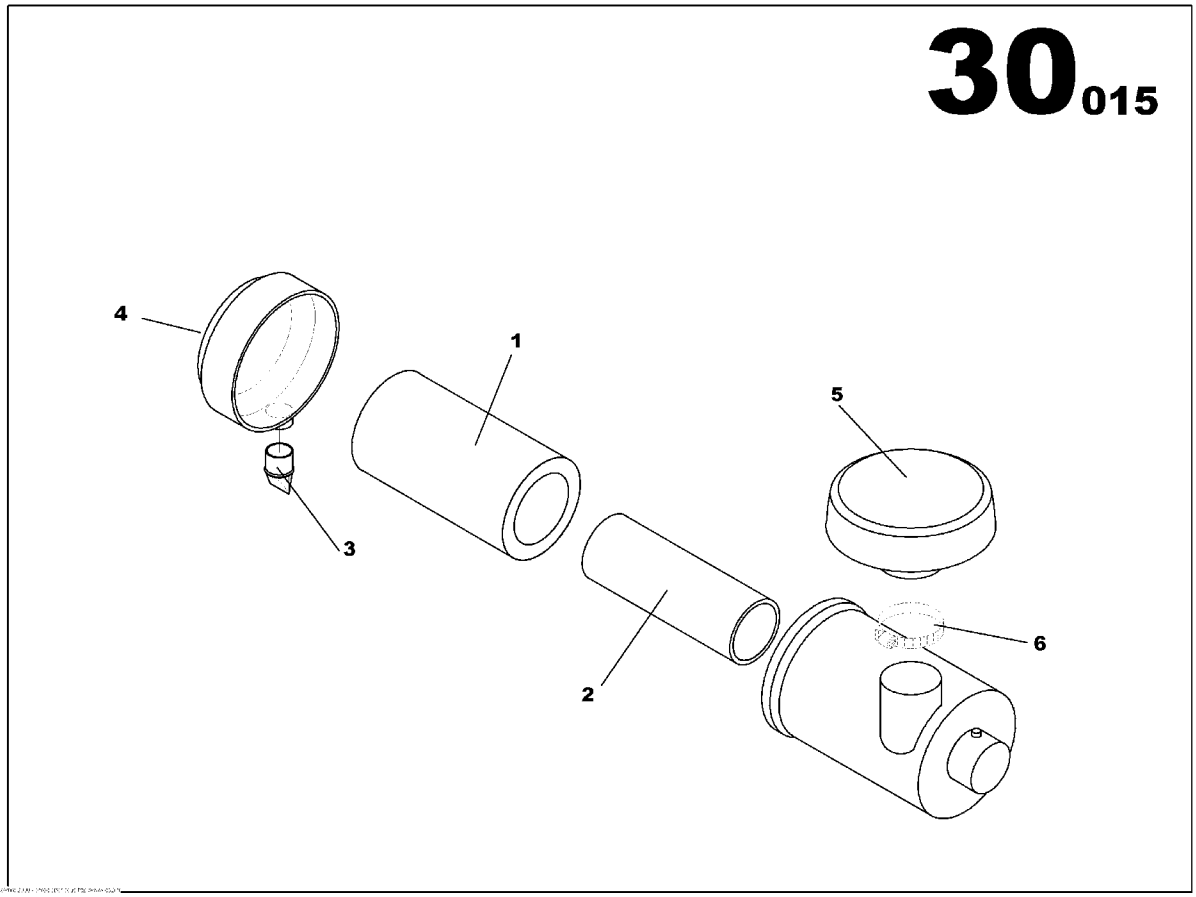

AIR FILTER HEAVY DUTY
85421444

Part numbers listed are only parts used in this model

Item	Part No.	Description	Qty	Un	From SN	To SN	Order PN	Page
1	85401339	AIR FILTER CARTRIDGE	1	UN			85401339	
2	85401354	AIR FILTER CARTRIDGE	1	UN			85401354	
3	85501229	VACUATOR VALVE	1	UN			85501229	
4	85501294	DUST CUP	1	UN			85501294	
5	85417541	RAIN CAP	1	UN			85417541	
6	85501880	HOSE CLIP D180/200	1	UN			85501880	

TRANS. WATER TEMPERATURE-OIL PRESSURE ASSEMBLY

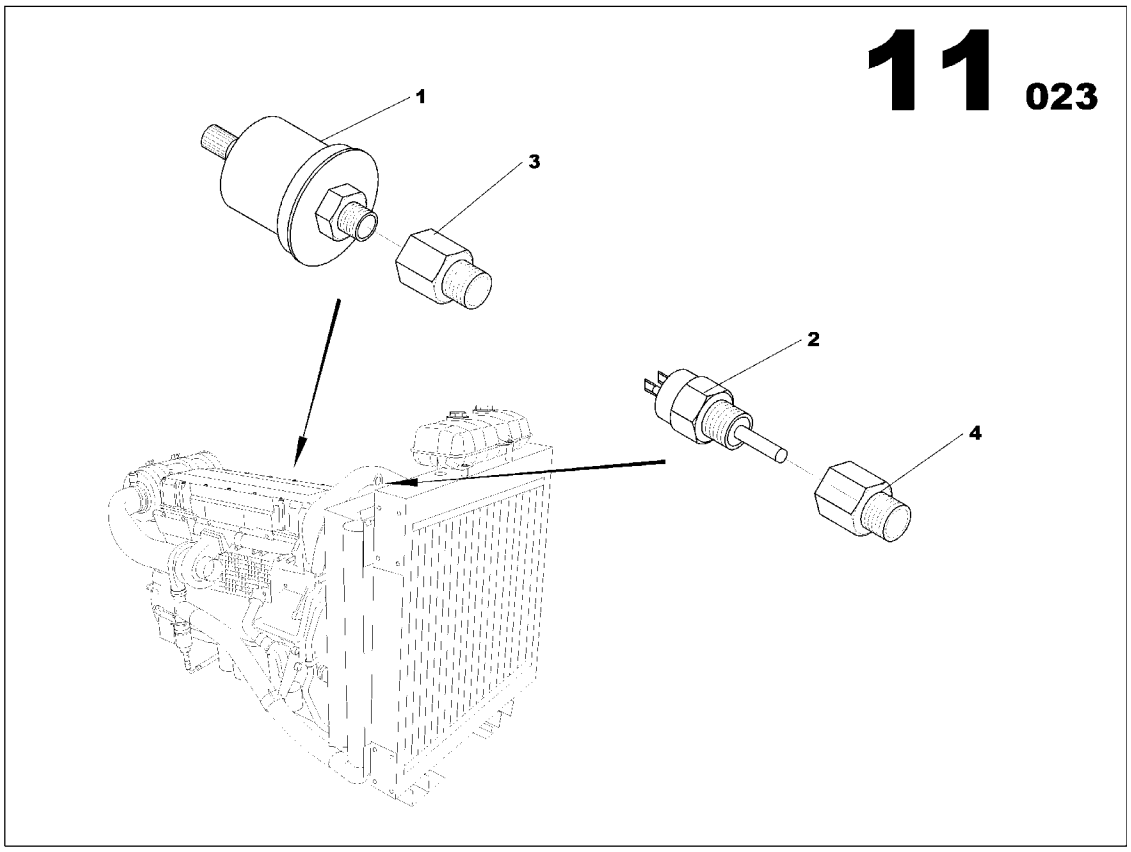

TRANS. WATER TEMPERATURE-OIL PRESSURE ASSEMBLY
85629939

Part numbers listed are only parts used in this model

Item	Part No.	Description	Qty	Un	From SN	To SN	Order PN	Page
1	85404598	PRESSURE SWITCH 00/10 BAR	1	UN			85404598	
2	85404606	TEMPERATURE SENSOR 40/120°	1	UN			85404606	
3	85631703	PIPE UNION REDUCER MAL/FEM M16x150	1	UN			85631703	
4	85631745	PIPE UNION REDUCER MAL/FEM M16x150	1	UN			85631745	

SPEED CONTROL FUNCTION

SPEED CONTROL FUNCTION

Part numbers listed are only parts used in this model

Item	Part No.	Description	Qty	Un	From SN	To SN	Order PN	Page
1	17140260	ENGINE WIRING LOOM VOLVO 12L	1	UN			17140260	

ENGINE WIRING FUNCTION

ENGINE WIRING FUNCTION

Part numbers listed are only parts used in this model

Item	Part No.	Description	Qty	Un	From SN	To SN	Order PN	Page
1	85630804	ENGINE WIRING LOOM VO 12L	1	UN			85630804	23
2	85638971	INTELLISYS 010 WIRING LOOM ASSEMBLY JD 6081	1	UN			85638971	25
3	85635712	ELECTRIC SHAFT ASSEMBLY	1	UN			85635712	29

ENGINE WIRING LOOM VO 12L

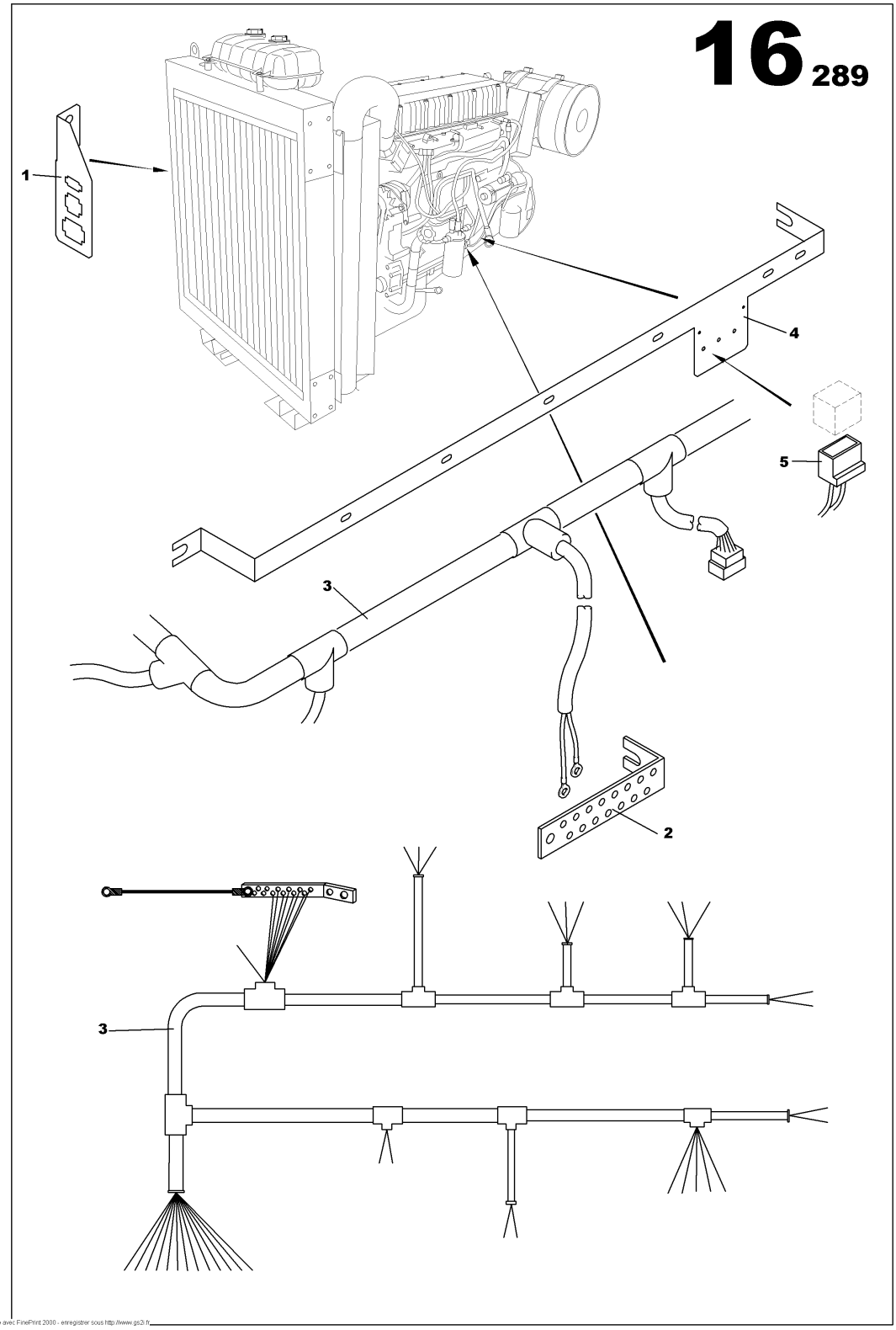

Imprimé avec FinePrint 2000 - enregistrer sous http://www.gs2i.fr

ENGINE WIRING LOOM VO 12L
85630804

Part numbers listed are only parts used in this model

Item	Part No.	Description	Qty	Un	From SN	To SN	Order PN	Page
1	85630622	CONNECTOR BRACKET	1	UN			85630622	
2	85416907	COPPER BAR 5x25	1	UN			85416907	
3	85630812	ENGINE WIRING LOOM VOLVO 12L	1	UN			85630812	
4	85630820	WIRING BRACKET VO TAD 12L	1	UN			85630820	
5	85408912	AUTOMOBILE RELAY BASE	1	UN			85408912	

INTELLISYS 010 WIRING LOOM ASSEMBLY JD 6081

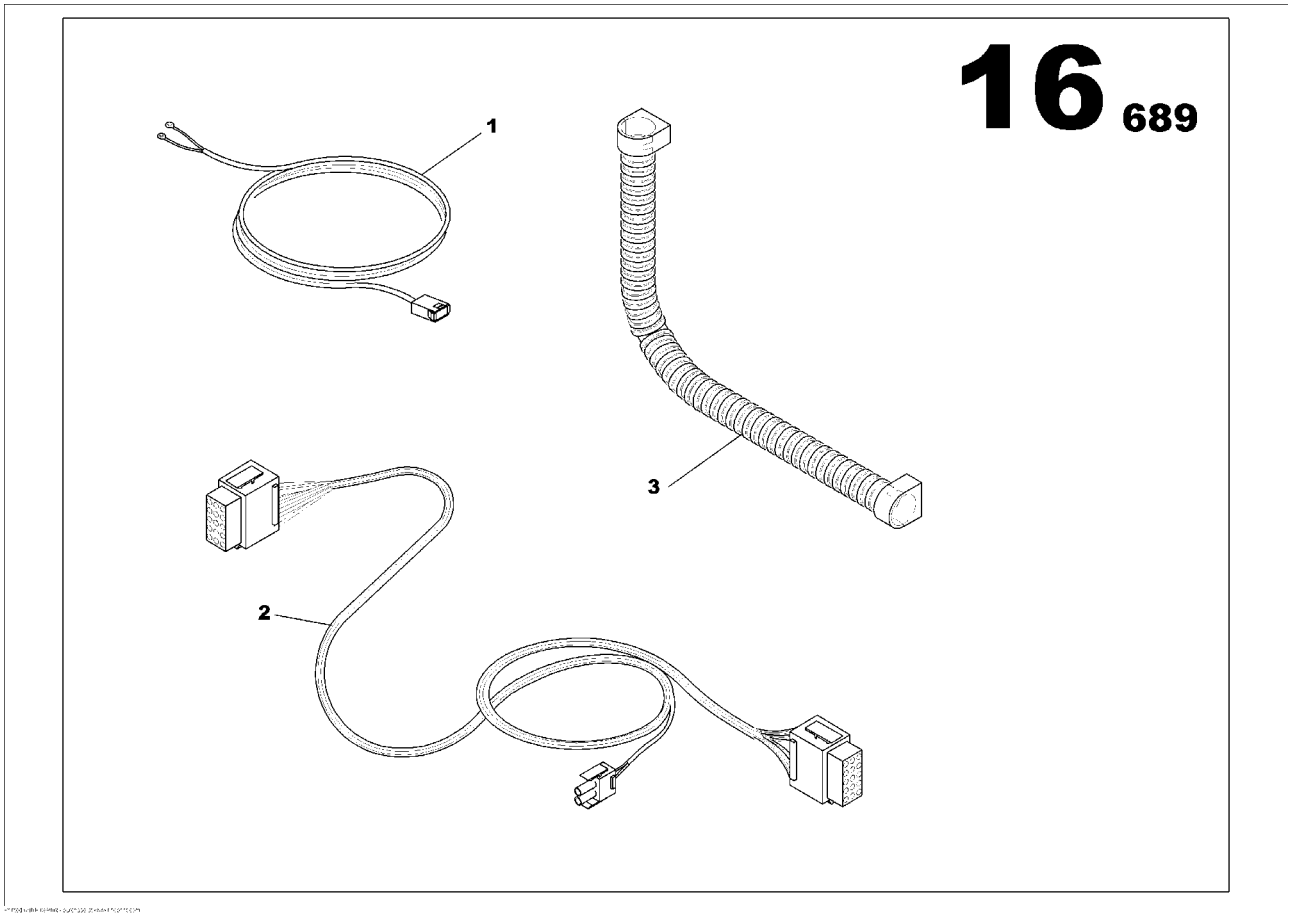

INTELLISYS 010 WIRING LOOM ASSEMBLY JD 6081
85638971

Part numbers listed are only parts used in this model

Item	Part No.	Description	Qty	Un	From SN	To SN	Order PN	Page
1	85638690	INTELLISYS WIRING LOOM 010-BAT	1	UN			85638690	
2	85635704	INTELLISYS 010 WIRING LOOM ASSEMBLY JD 6081	1	UN	032004983		85635704	27

INTELLISYS 010 WIRING LOOM ASSEMBLY JD 6081

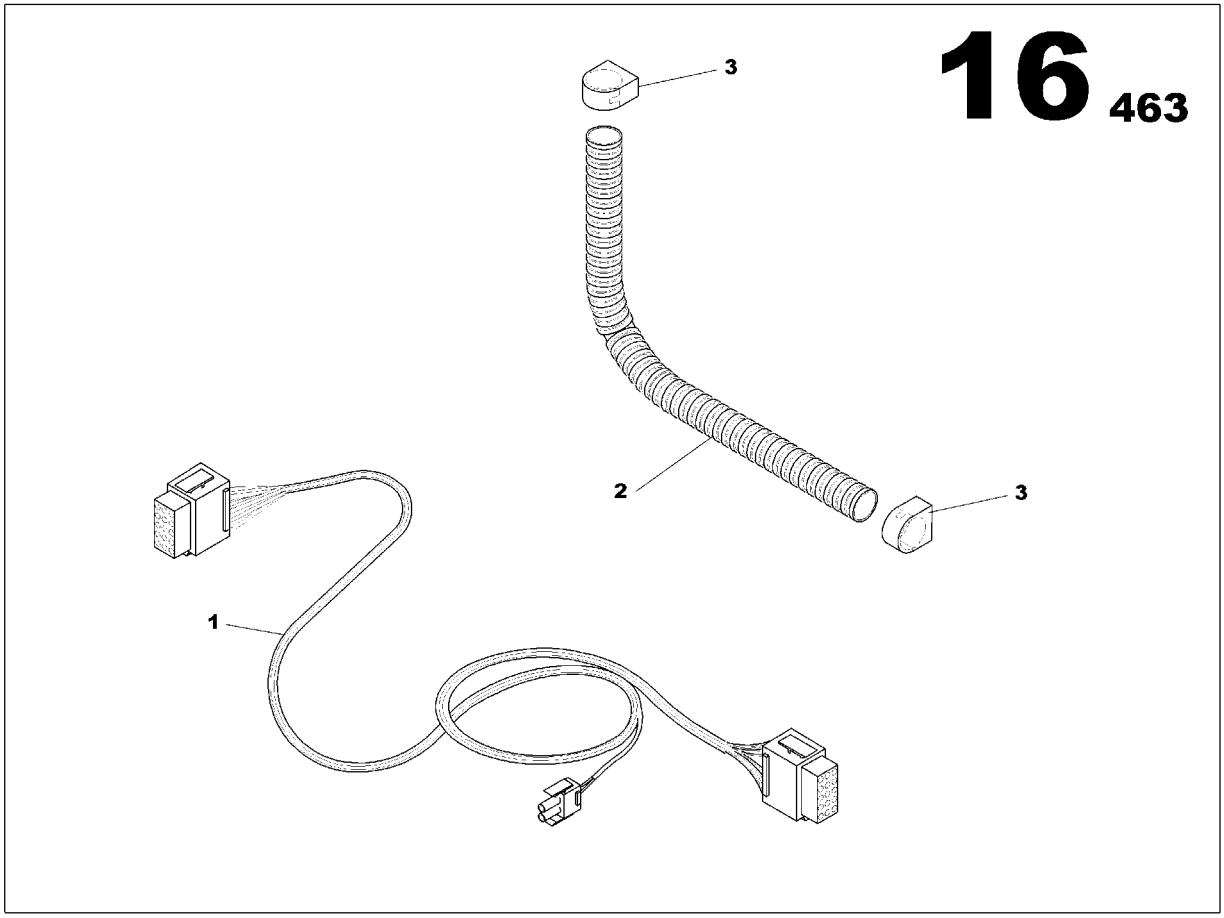

INTELLISYS 010 WIRING LOOM ASSEMBLY JD 6081
85635704

Part numbers listed are only parts used in this model

Item	Part No.	Description	Qty	Un	From SN	To SN	Order PN	Page
1	85635217	INTELLISYS WIRING LOOM 010	1	UN			85635217	
2	85427268	ELECTRICAL SHAFT D29	1.7	ML			85427268	
3	85427276	CLIP D29	2	UN			85427276	

ELECTRIC SHAFT ASSEMBLY

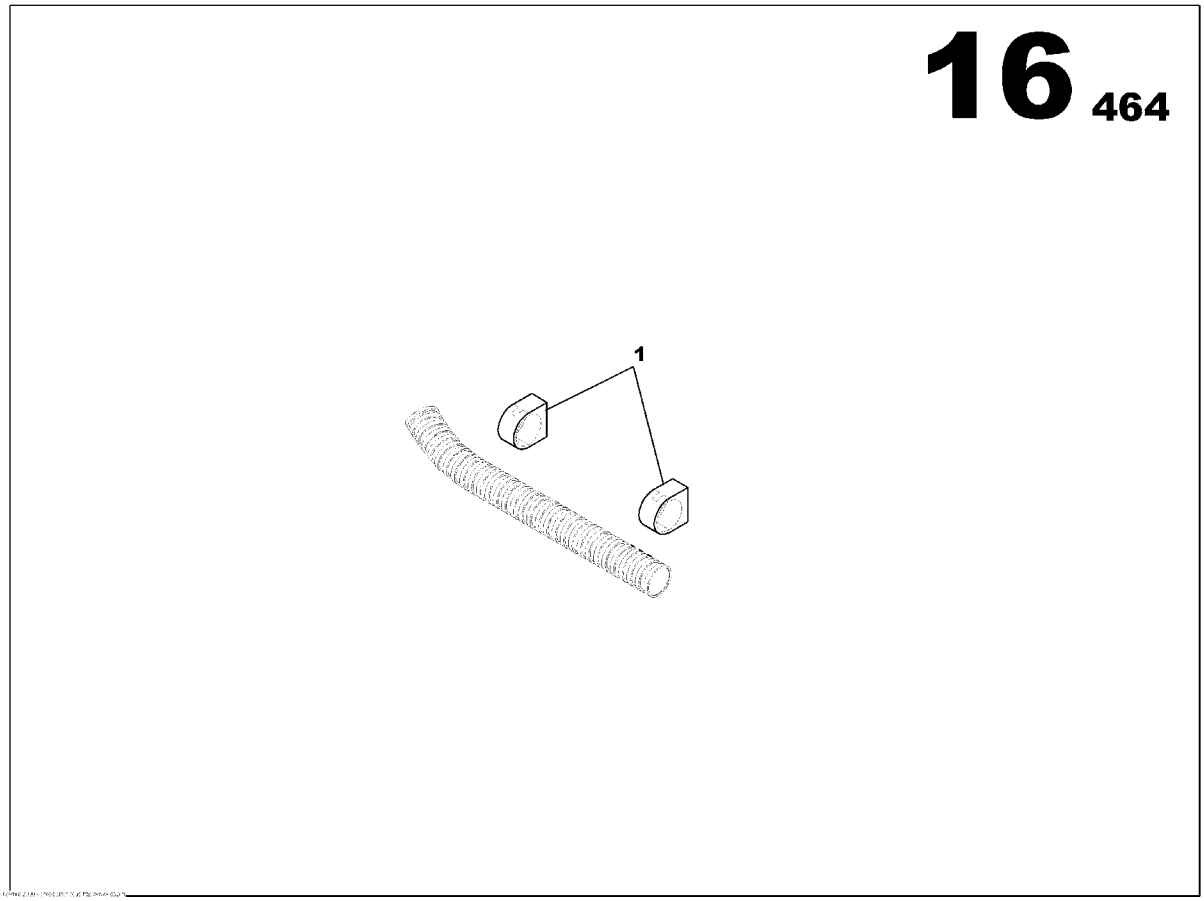

ELECTRIC SHAFT ASSEMBLY
85635712

Part numbers listed are only parts used in this model

Item	Part No.	Description	Qty	Un	From SN	To SN	Order PN	Page
1	85427029	CLIP D29	2	UN			85427029	

ALTERNATOR FUNCTION

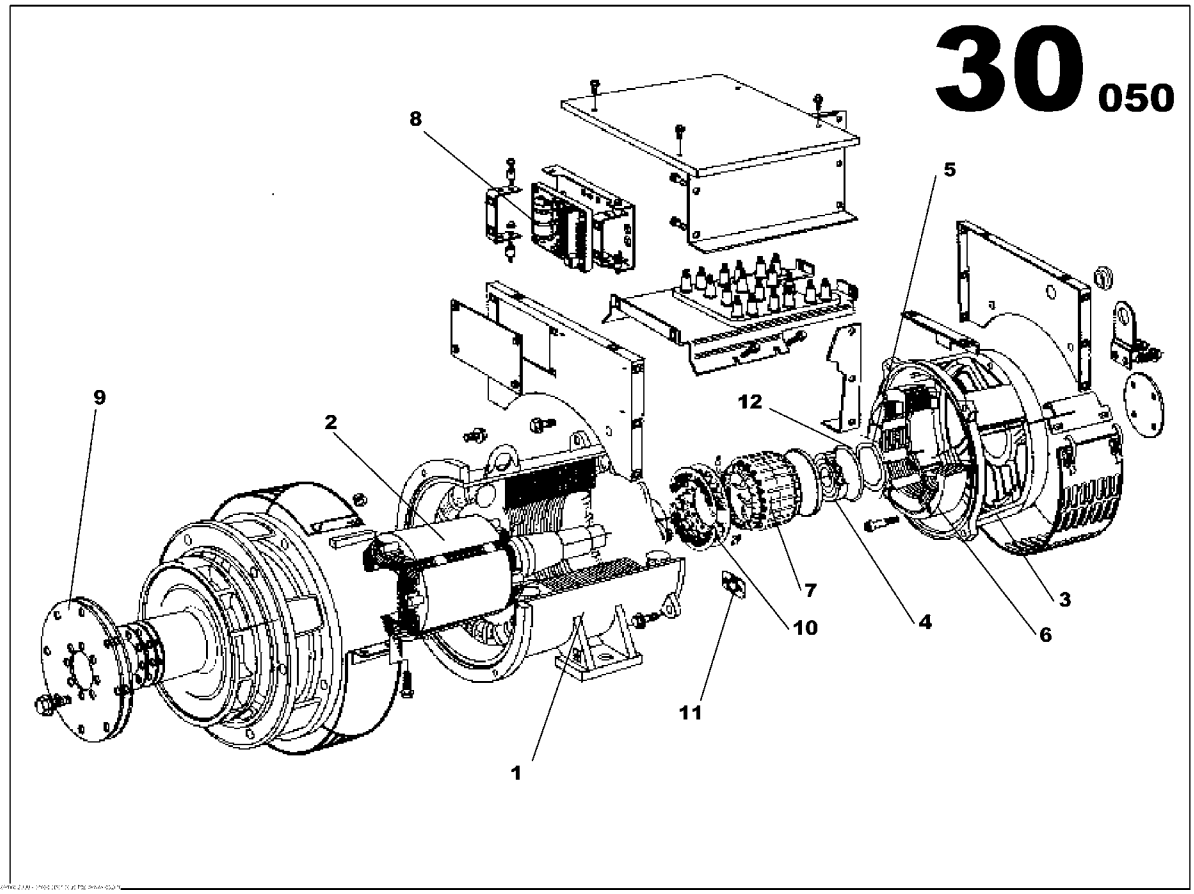

ALTERNATOR FUNCTION

Part numbers listed are only parts used in this model

Item	Part No.	Description	Qty	Un	From SN	To SN	Order PN	Page
1	17139940	OUTPUT CABLES ALTERNATOR ASSEMBLY	1	UN			17139940	33
2		ALTERNATOR	1	UN				41

OUTPUT CABLES ALTERNATOR ASSEMBLY

OUTPUT CABLES ALTERNATOR ASSEMBLY
17139940

Part numbers listed are only parts used in this model

Item	Part No.	Description	Qty	Un	From SN	To SN	Order PN	Page
1	17139932	OUTPUT CABLES ALTERNATOR ASSEMBLY	1	UN			17139932	35

OUTPUT CABLES ALTERNATOR ASSEMBLY

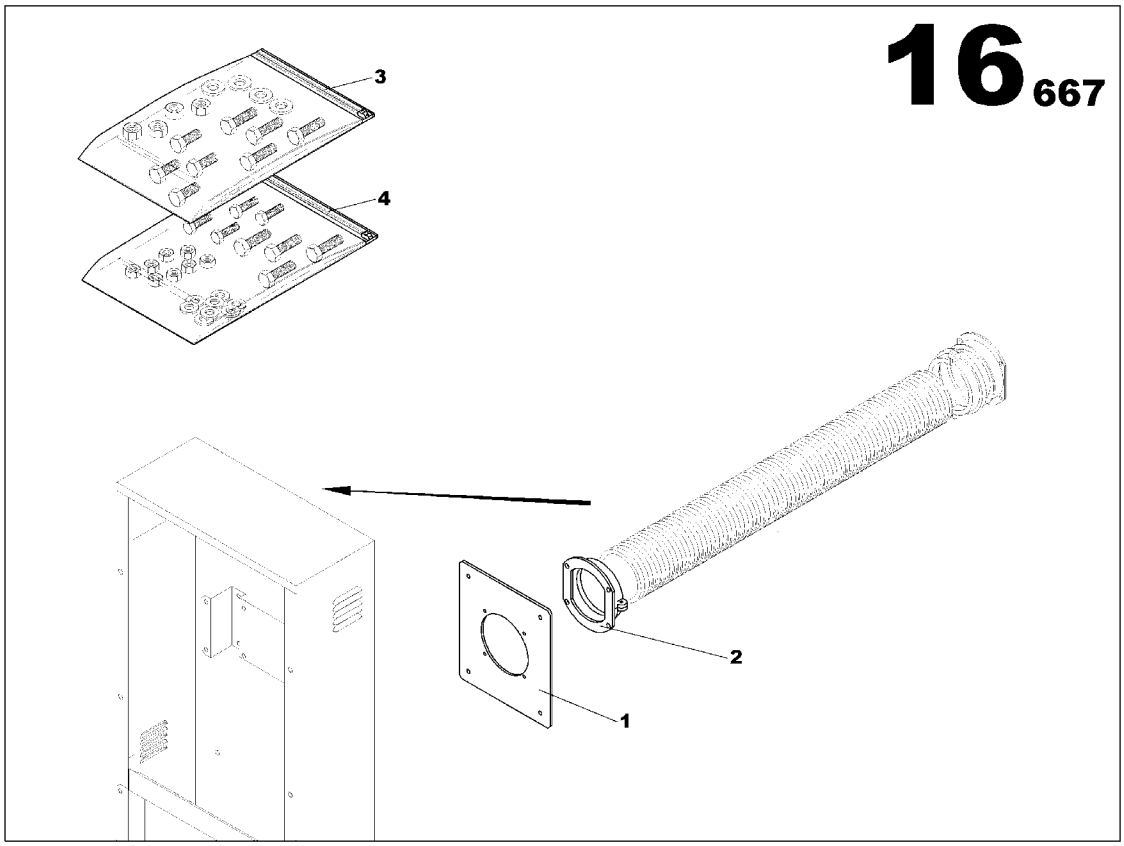

OUTPUT CABLES ALTERNATOR ASSEMBLY
17139932

Part numbers listed are only parts used in this model

Item	Part No.	Description	Qty	Un	From SN	To SN	Order PN	Page
1	17139833	PLATEN PANEL ALTERNATOR OPTION	1	UN			17139833	
2	85499754	PIPE UNION PG70	1	UN			85499754	
3	85639383	SCREWS ASSEMBLY	1	UN			85639383	37
4	85639417	SCREWS ASSEMBLY	1	UN			85639417	39

SCREWS ASSEMBLY

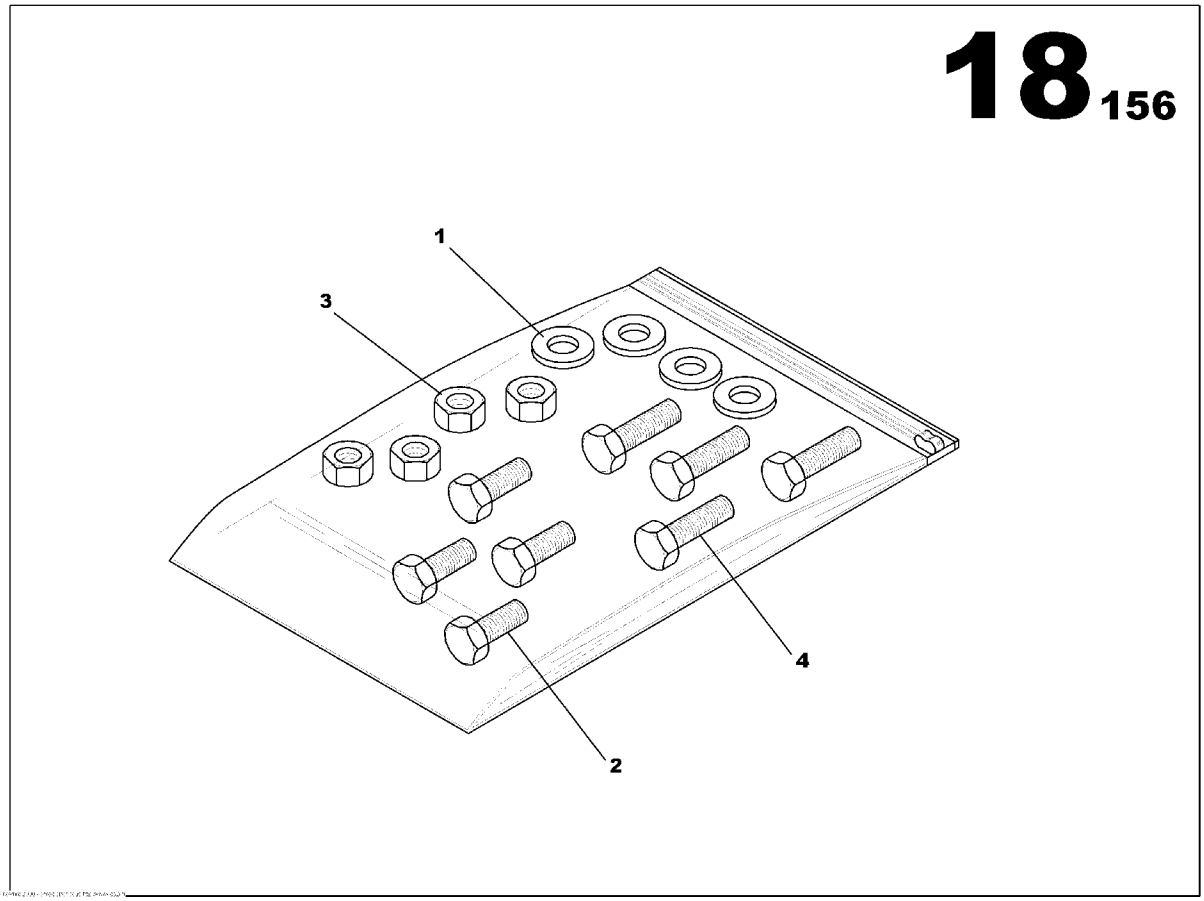

SCREWS ASSEMBLY
85639383

Part numbers listed are only parts used in this model

Item	Part No.	Description	Qty	Un	From SN	To SN	Order PN	Page
1	85636736	WASHER 6x12	4	UN			85636736	
2	85639318	SCREW H M6x16	4	UN	02010754		85639318	
3	85507911	NUT M6	4	UN			85507911	

SCREWS ASSEMBLY

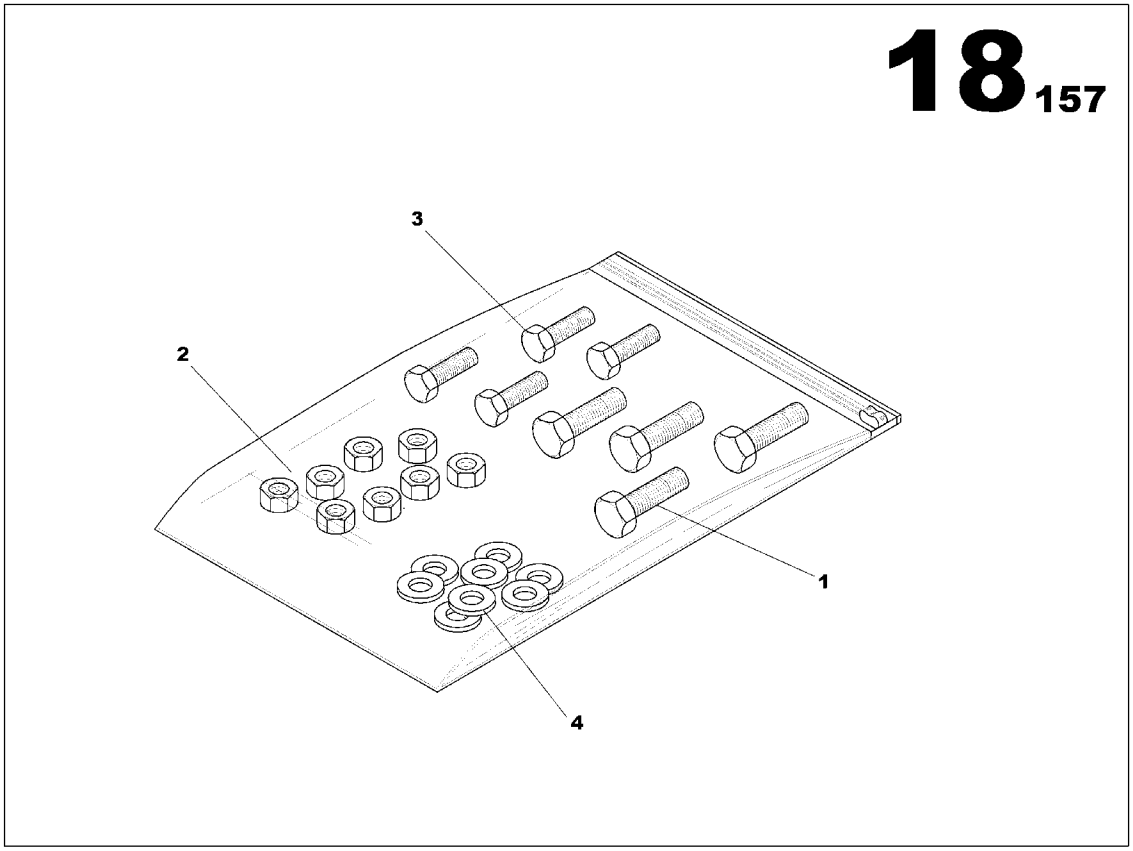

SCREWS ASSEMBLY
85639417

Part numbers listed are only parts used in this model

Item	Part No.	Description	Qty	Un	From SN	To SN	Order PN	Page
1	85636389	SCREW H M6x16	4	UN			85636389	
2	85429553	NUT M4	4	UN			85429553	
3	85636363	SCREW HS M4x16	4	UN			85636363	
4	85636728	WASHER 4x10	8	UN			85636728	

ALTERNATOR

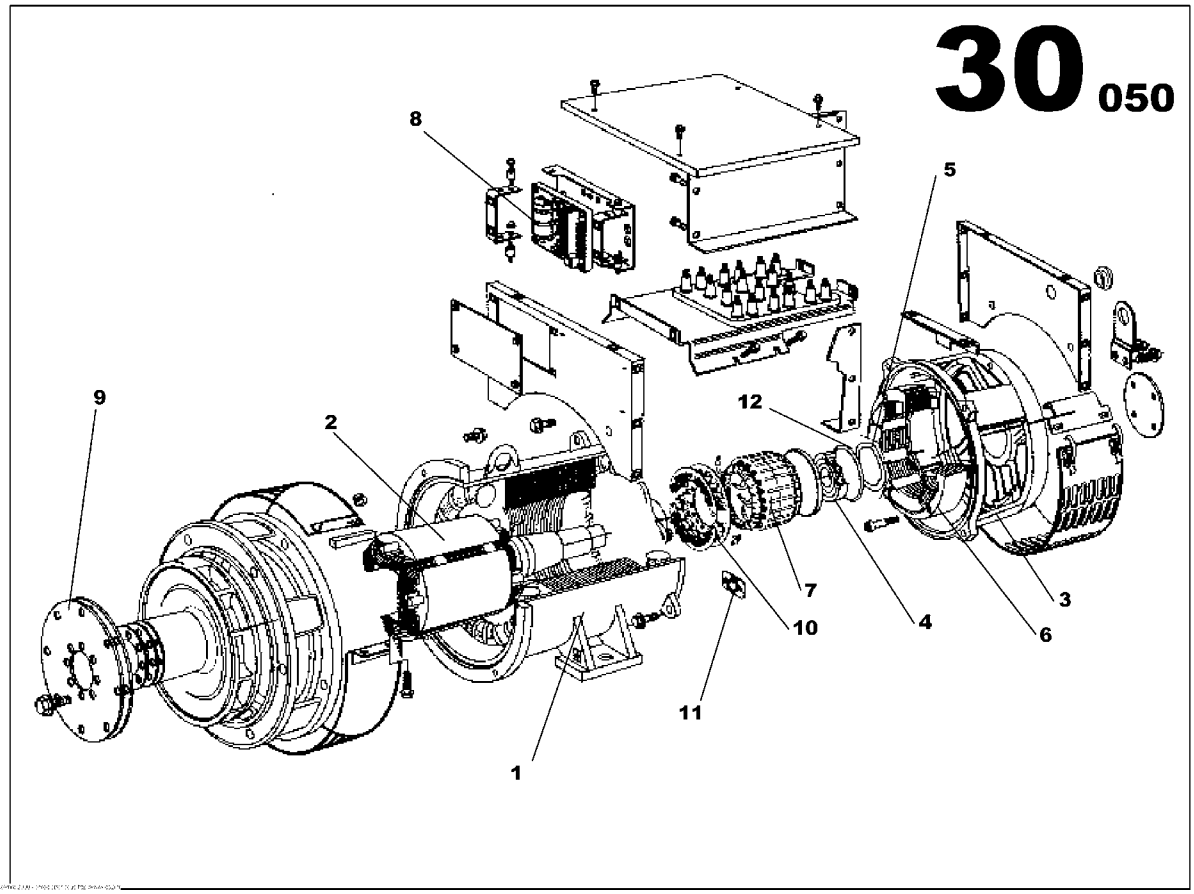

ALTERNATOR

Part numbers listed are only parts used in this model

Item	Part No.	Description	Qty	Un	From SN	To SN	Order PN	Page
1	85416667	ALTERNATOR LS 471M	1	UN			85416667	43

ALTERNATOR LS 471M

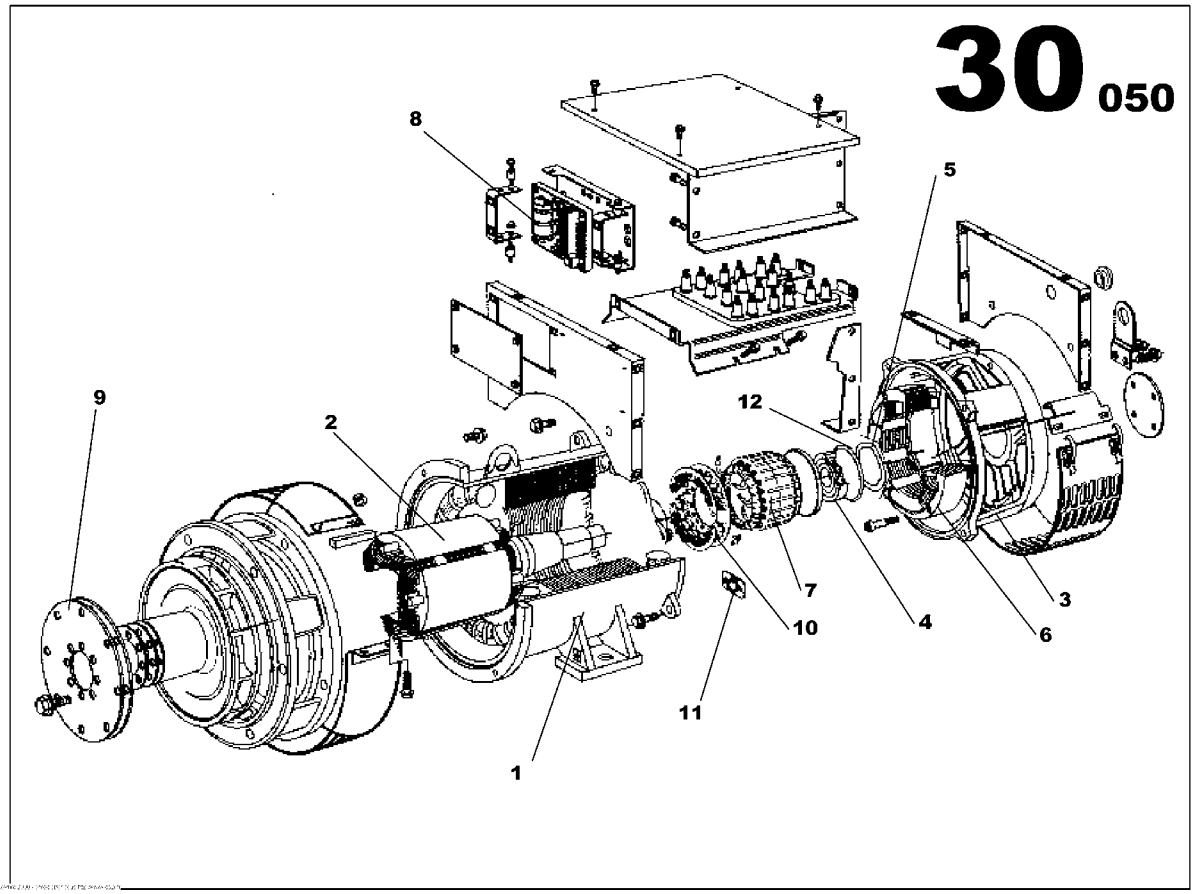

ALTERNATOR LS 471M
85416667

Part numbers listed are only parts used in this model

Item	Part No.	Description	Qty	Un	From SN	To SN	Order PN	Page
1	85508836	WOUND STATOR ASSEMBLY *Alternator S/N needed to supply this part-*	1	UN			85508836	
2	85509131	WOUND ROTOR ASSEMBLY *Alternator S/N needed to supply this part-*	1	UN			85509131	
3	85508885	N.D.E BRACKET	1	UN			85508885	
4	85425916	BALL BEARING	1	UN			85425916	
5	85509065	WAVY WASHER	1	UN			85509065	
6	85508935	WOUND EXCITER FIELD	1	UN			85508935	
7	85508984	WOUND EXCITER ARMATURE	1	UN			85508984	
8	85425577	GOVERNOR	1	UN			85425577	
9	85425957	COUPLING DISC LSA 471 and 462L6/VL12	1	UN			85425957	
10	85426179	DIODE BRIDGE	1	UN			85426179	
11	85402444	SURGE SUPPRESSOR	1	UN			85402444	
12	85509016	O RING	1	UN			85509016	

COOLER FUNCTION

COOLER FUNCTION

Part numbers listed are only parts used in this model

Item	Part No.	Description	Qty	Un	From SN	To SN	Order PN	Page
1	85629442	RADIATOR VO TAD 12L ASSEMBLY	1	UN			85629442	47

RADIATOR VO TAD 12L ASSEMBLY

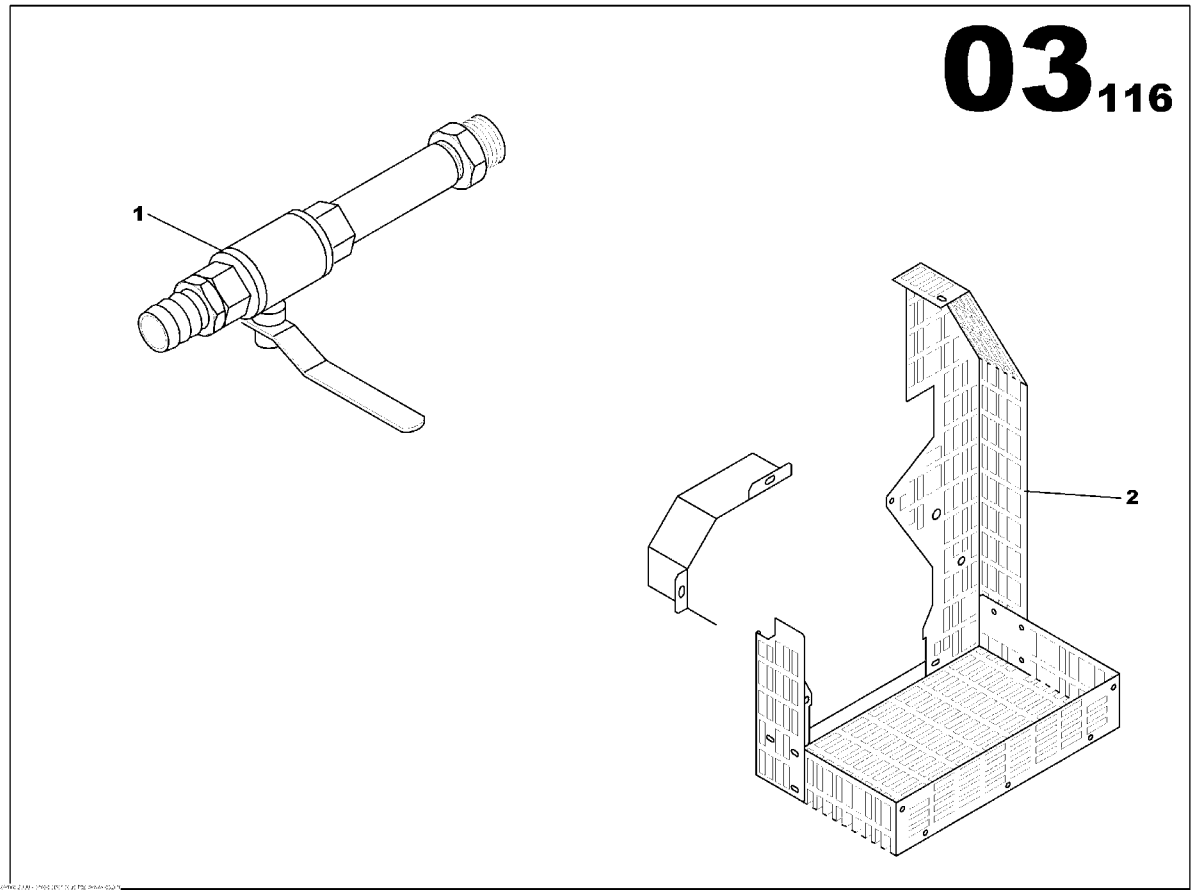

RADIATOR VO TAD 12L ASSEMBLY
85629442

Part numbers listed are only parts used in this model

Item	Part No.	Description	Qty	Un	From SN	To SN	Order PN	Page
1	85629459	VOLVO RADIATOR DRAIN ASSEMBLY	1	UN			85629459	49
2	85630093	PULLEY GUARD FRONT TAD 12L ASSEMBLY	1	UN			85630093	51

VOLVO RADIATOR DRAIN ASSEMBLY

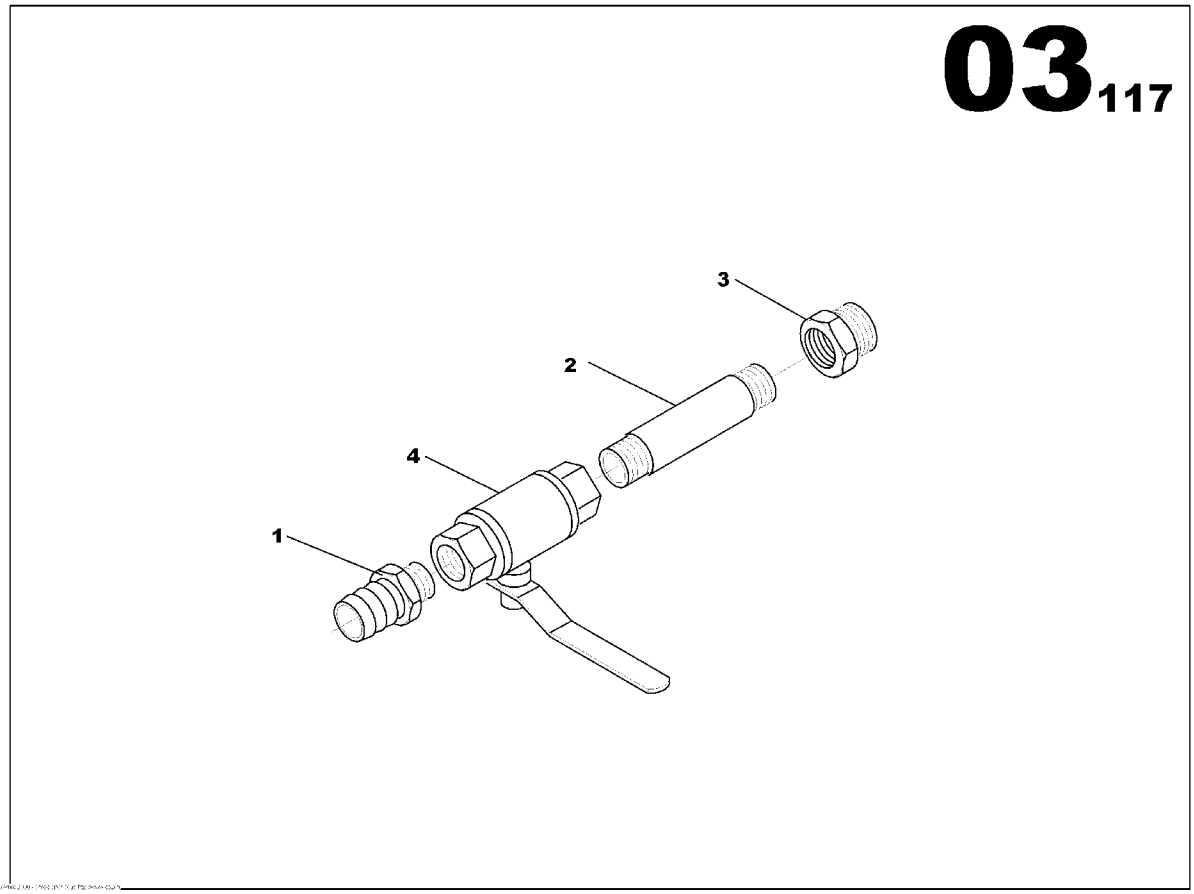

VOLVO RADIATOR DRAIN ASSEMBLY
85629459

Part numbers listed are only parts used in this model

Item	Part No.	Description	Qty	Un	From SN	To SN	Order PN	Page
1	85409258	PIPE UNION MAL/MAL 3/8G	1	UN			85409258	
2	85631653	PIPE UNION MAL/MAL 3/4G	1	UN			85631653	
3	85631695	PIPE UNION REDUCER MAL/FEM M22x150 3/8G	1	UN			85631695	
4	85416451	2 WAYS VALVE	1	UN			85416451	

PULLEY GUARD FRONT TAD 12L ASSEMBLY

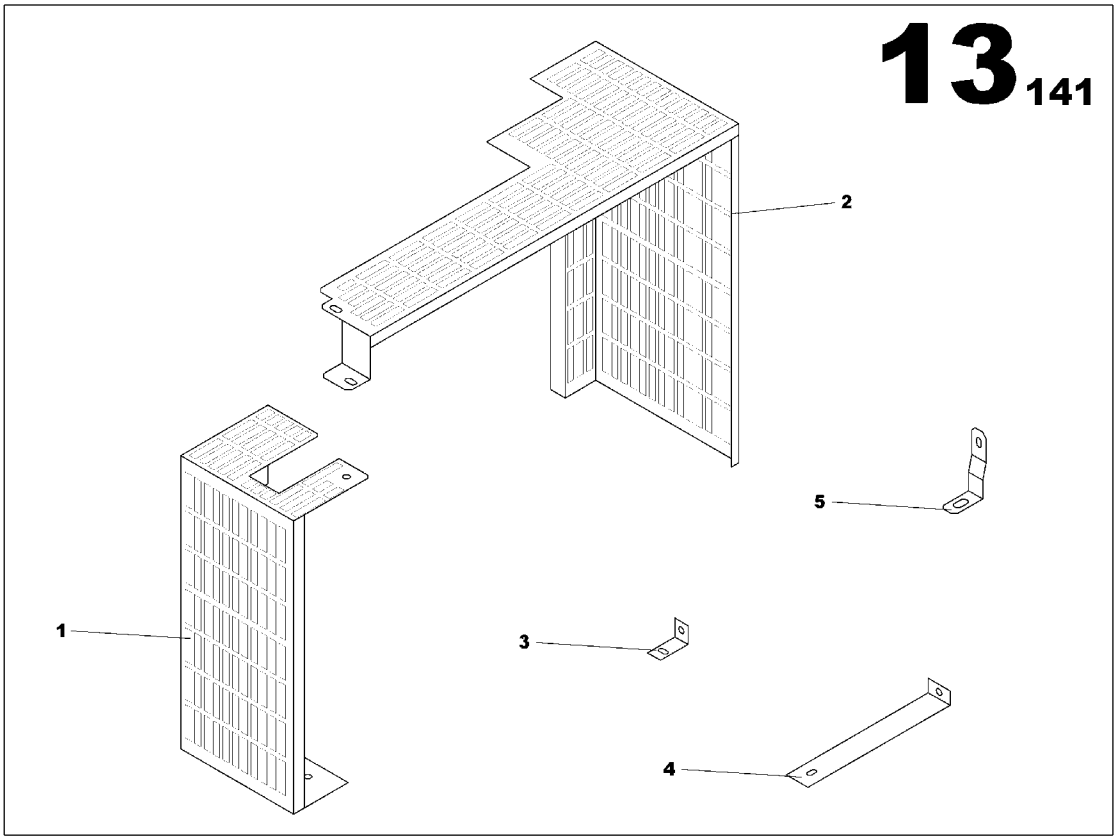

PULLEY GUARD FRONT TAD 12L ASSEMBLY
85630093

Part numbers listed are only parts used in this model

Item	Part No.	Description	Qty	Un	From SN	To SN	Order PN	Page
1	85630101	RADIATOR PULLEY GUARD FRONT VO TAD 12L	1	UN			85630101	
2	85630119	RADIATOR PULLEY GUARD FRONT VO TAD 12L	1	UN			85630119	
3	85630127	FAN BELT GUARD BRACKET VO TAD12LG	1	UN			85630127	
4	85630135	FAN BELT GUARD BRACKET VO TAD12LG	1	UN			85630135	
5	85630143	FAN BELT GUARD BRACKET VO TAD12LG	1	UN			85630143	

FUEL FUNCTION

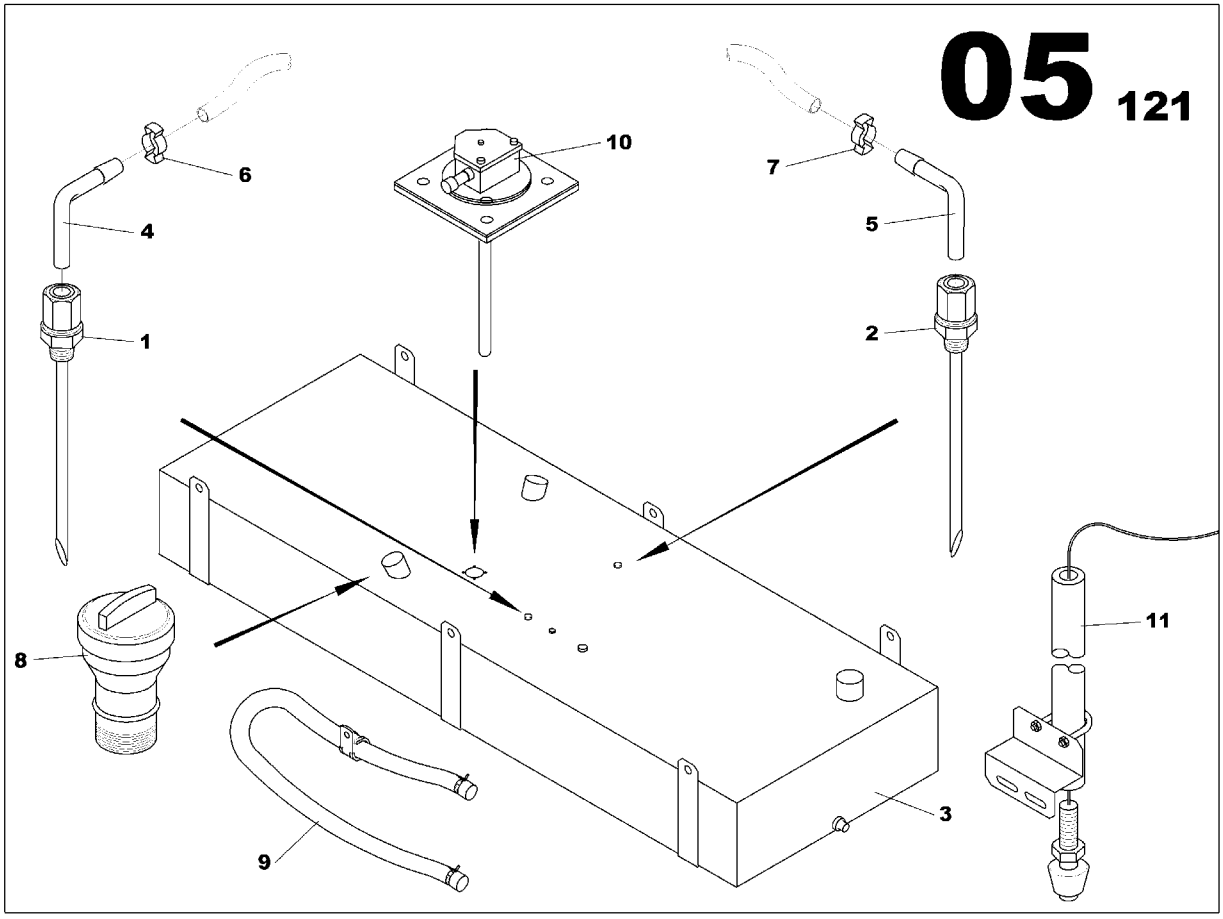

FUEL FUNCTION

Part numbers listed are only parts used in this model

Item	Part No.	Description	Qty	Un	From SN	To SN	Order PN	Page
1	17137373	FUEL TANK ASSEMBLY	1	UN			17137373	55
2	17137480	FUEL PREFILTER KIT ASSEMBLY	1	UN			17137480	67

FUEL TANK ASSEMBLY

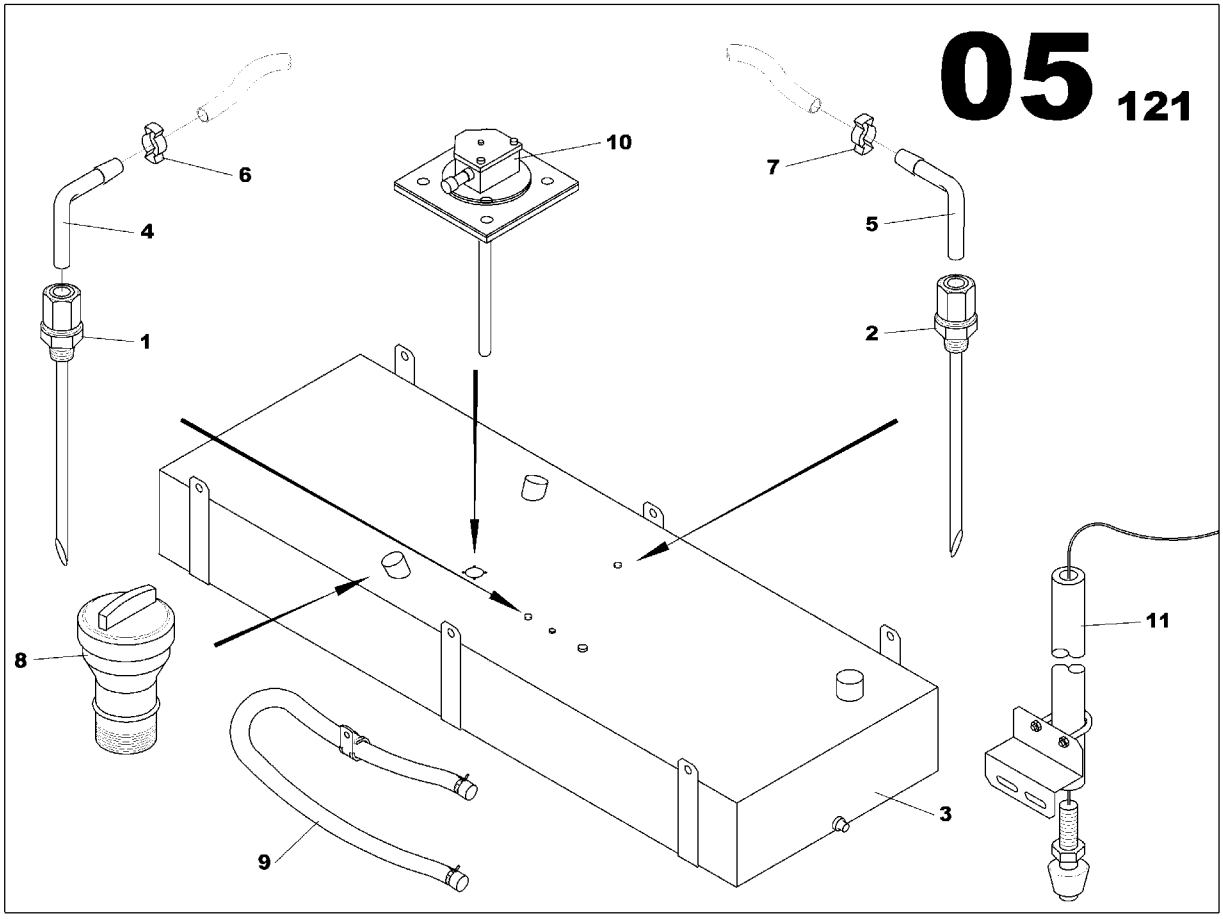

FUEL TANK ASSEMBLY
17137373

Part numbers listed are only parts used in this model

Item	Part No.	Description	Qty	Un	From SN	To SN	Order PN	Page
1	17137365	FUEL TANK ASSEMBLY	1	UN			17137365	57

FUEL TANK ASSEMBLY

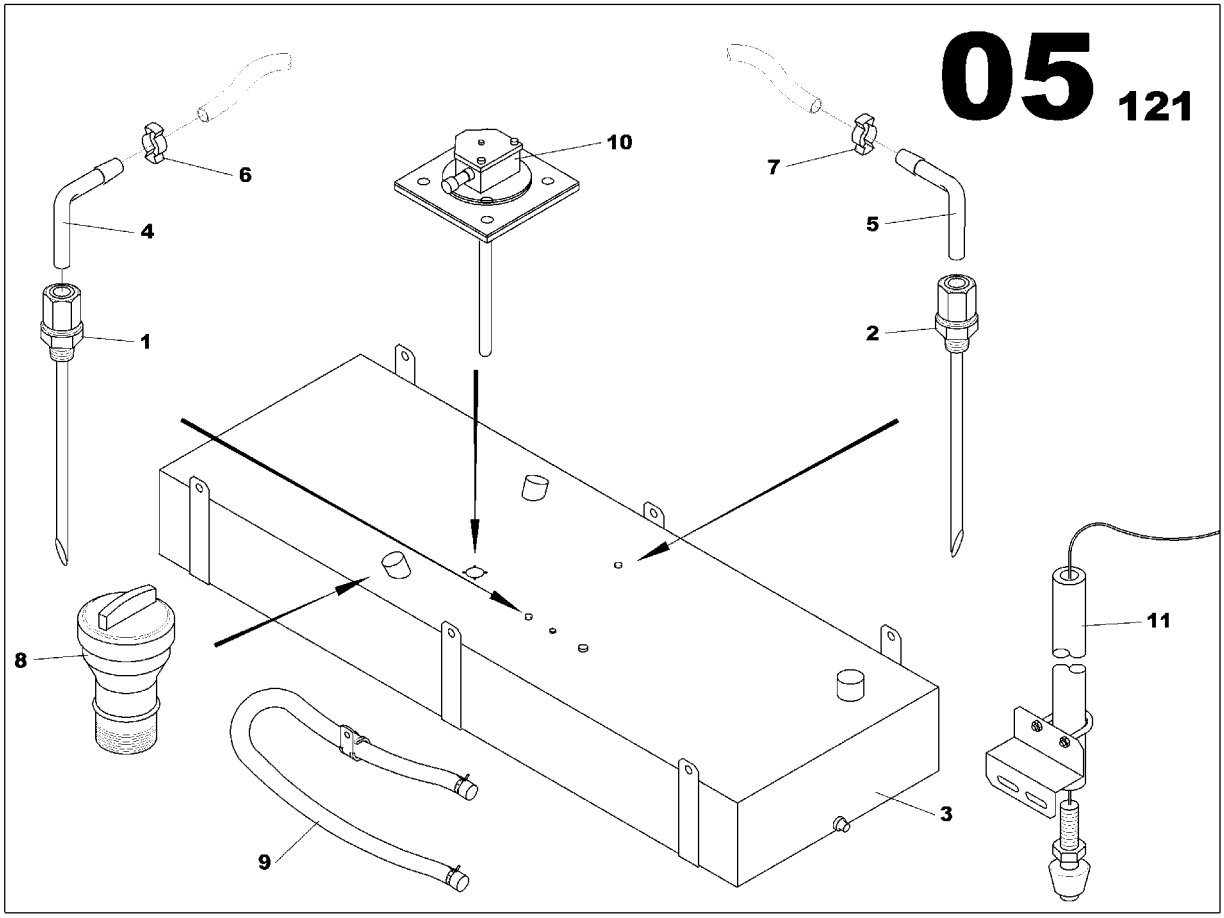

FUEL TANK ASSEMBLY
17137365

Part numbers listed are only parts used in this model

Item	Part No.	Description	Qty	Un	From SN	To SN	Order PN	Page
1	17131343	FUEL SUCCION PIPE L470 D10 1/2G	1	UN			17131343	
2	17137241	FUEL SUCCION PIPE L470 D10 1/2G	1	UN			17137241	
3	17137324	TANK 1368L	1	UN			17137324	
3	17137324	TANK 1368L	1	UN			17137324	
4	85631729	PIPE UNION ELBOW MAL/FEM D10	1	UN			85631729	
5	85631737	PIPE UNION ELBOW MAL/FEM D12	1	UN			85631737	
6	85509727	SPRING CLAMP D17/19	2	UN			85509727	
7	85631786	SPRING CLAMP D19/21	2	UN			85631786	
8	85629541	FUEL FILLING FUNNEL BASE TANK	1	UN			85629541	59
9	17130196	COMBUSTIBLE VENT TANK ASSEMBLY	1	UN			17130196	61
10	85404580	TRANS. FUEL LEVEL ASSEMBLY	1	UN			85404580	63
11	17138017	LEAKAGE DETECTION RETENTION BUND ASSEMBLY	1	UN			17138017	
11	17138017	LEAKAGE DETECTION RETENTION BUND ASSEMBLY	1	UN			17138017	65

FUEL FILLING FUNNEL BASE TANK

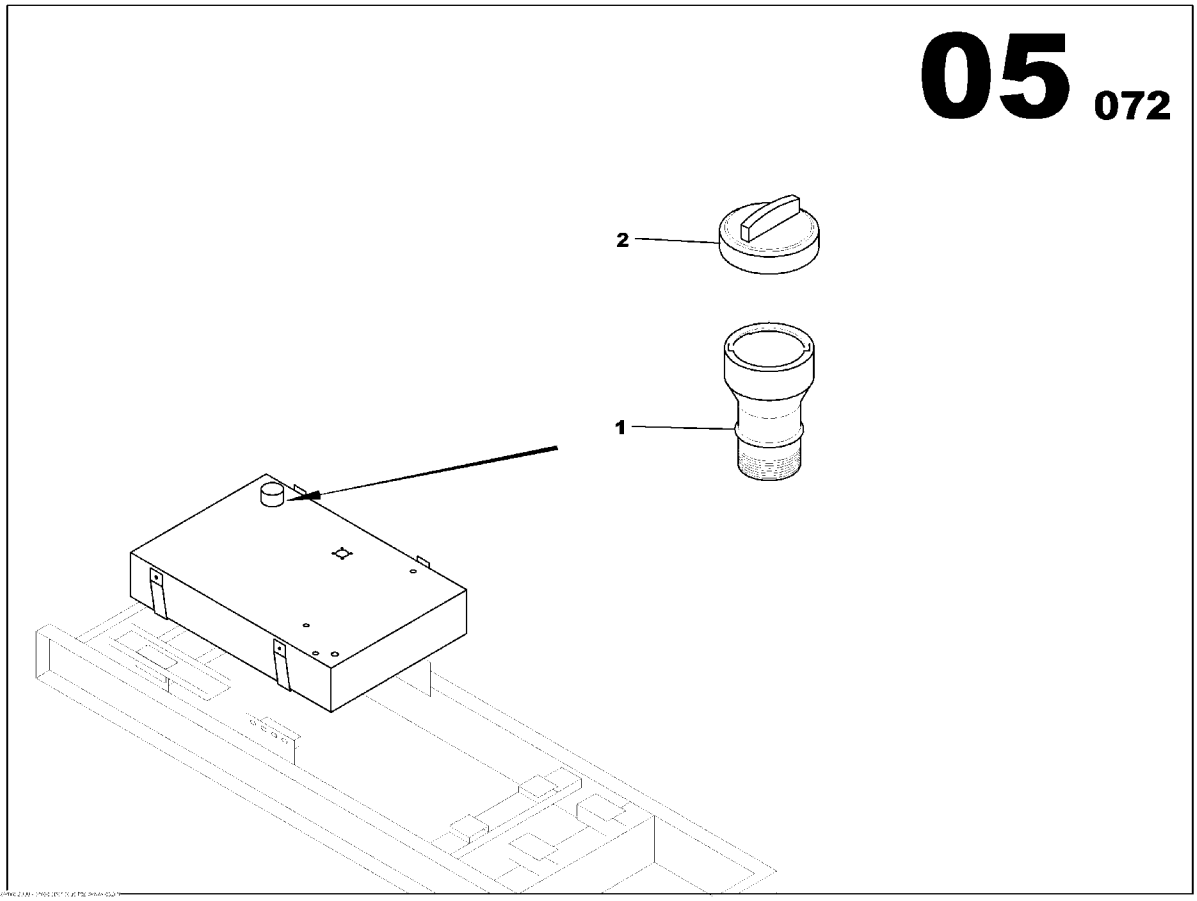

FUEL FILLING FUNNEL BASE TANK
85629541

Part numbers listed are only parts used in this model

Item	Part No.	Description	Qty	Un	From SN	To SN	Order PN	Page
1	85403517	FUEL FILLING FUNNEL BASE TANK	1	UN			85403517	
2	85509222	TANK CAP	1	UN			85509222	

COMBUSTIBLE VENT TANK ASSEMBLY

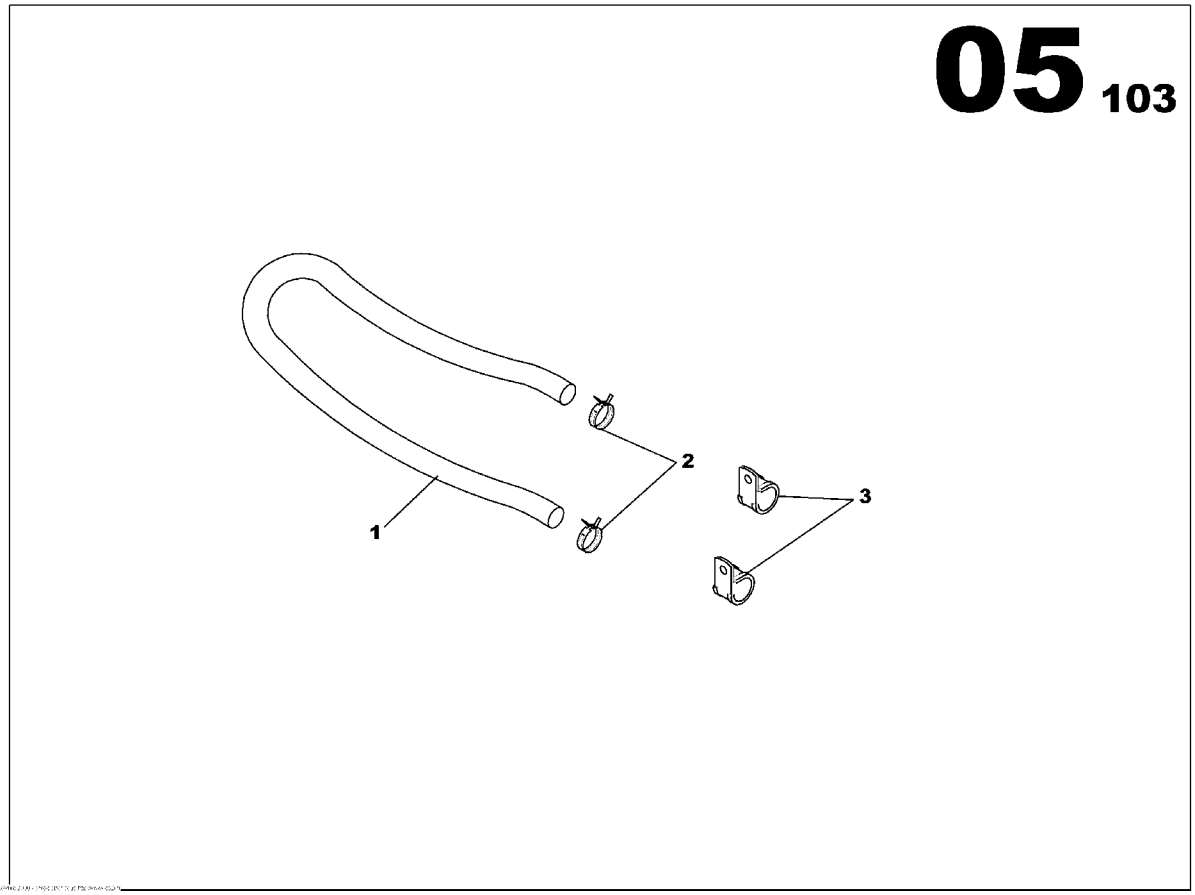

COMBUSTIBLE VENT TANK ASSEMBLY
17130196

Part numbers listed are only parts used in this model

Item	Part No.	Description	Qty	Un	From SN	To SN	Order PN	Page
1	85416436	FLEXIBLE HOSE D8x14	1	ML			85416436	
2	17130824	SPRING CLAMP D10/13	1	UN			17130824	
3	17130816	CLAMP D20	2	UN			17130816	

TRANS. FUEL LEVEL ASSEMBLY

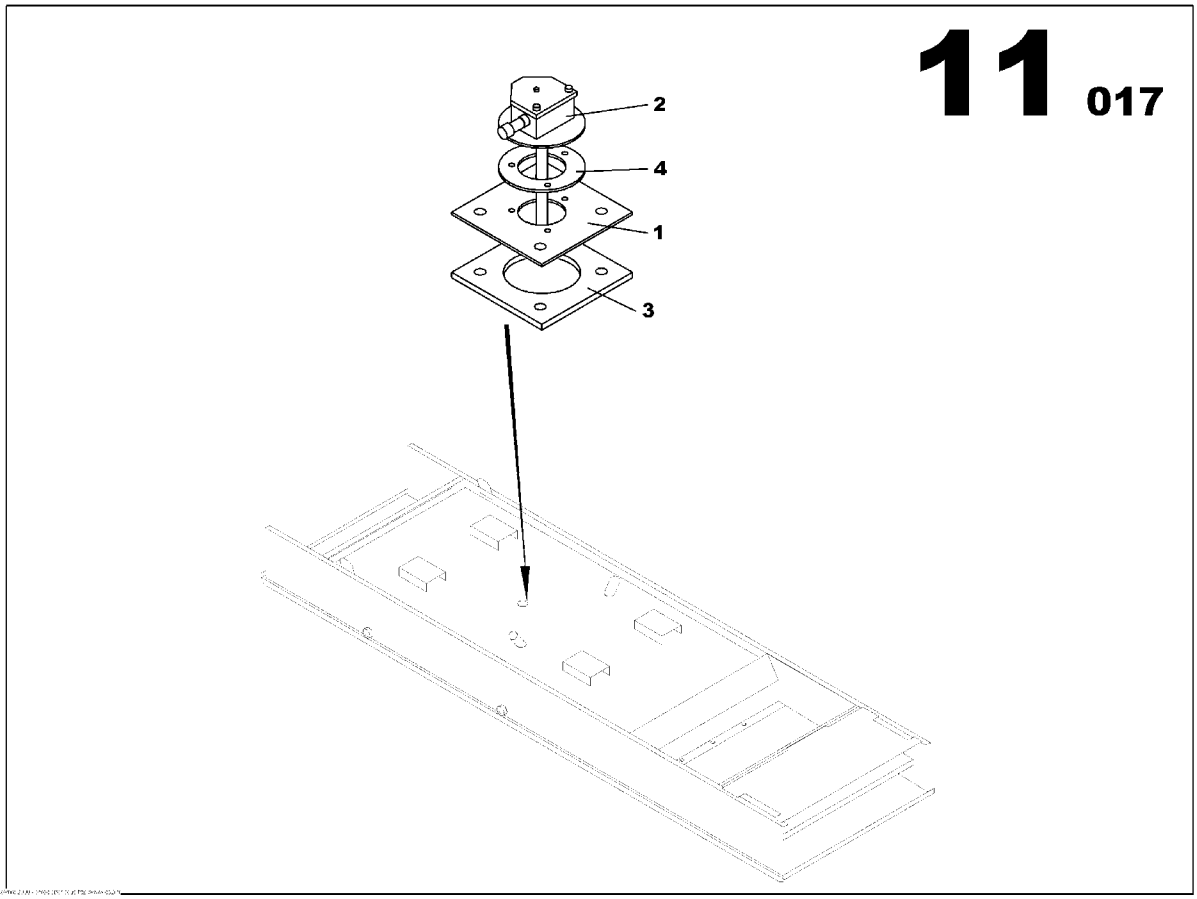

TRANS. FUEL LEVEL ASSEMBLY
85404580

Part numbers listed are only parts used in this model

Item	Part No.	Description	Qty	Un	From SN	To SN	Order PN	Page
1	85403509	LEVEL SENSOR ADAPTER	1	UN			85403509	
2	85404572	LEVEL SENSOR	1	UN			85404572	
3	85409068	SQARE FLANGE GASKET	1	UN			85409068	
4	85409076	ROUND FLANGE GASKET	1	UN			85409076	

LEAKAGE DETECTION RETENTION BUND ASSEMBLY

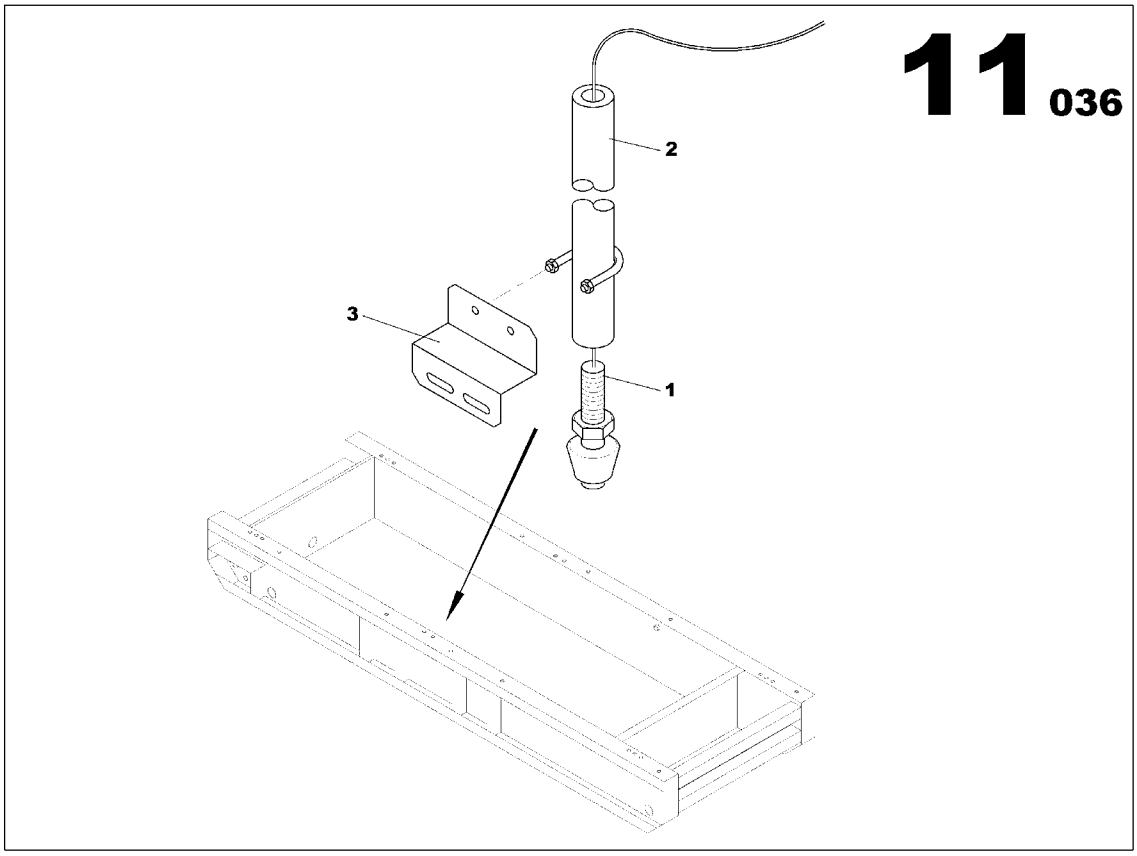

LEAKAGE DETECTION RETENTION BUND ASSEMBLY
17138017

Part numbers listed are only parts used in this model

Item	Part No.	Description	Qty	Un	From SN	To SN	Order PN	Page
1	85417459	LEVEL SWITCH	1	UN			85417459	
2	17132325	LEVEL SWITCH BRACKET	1	UN			17132325	
3	17139692	LEVEL SWITCH BRACKET	1	UN			17139692	

FUEL PREFILTER KIT ASSEMBLY

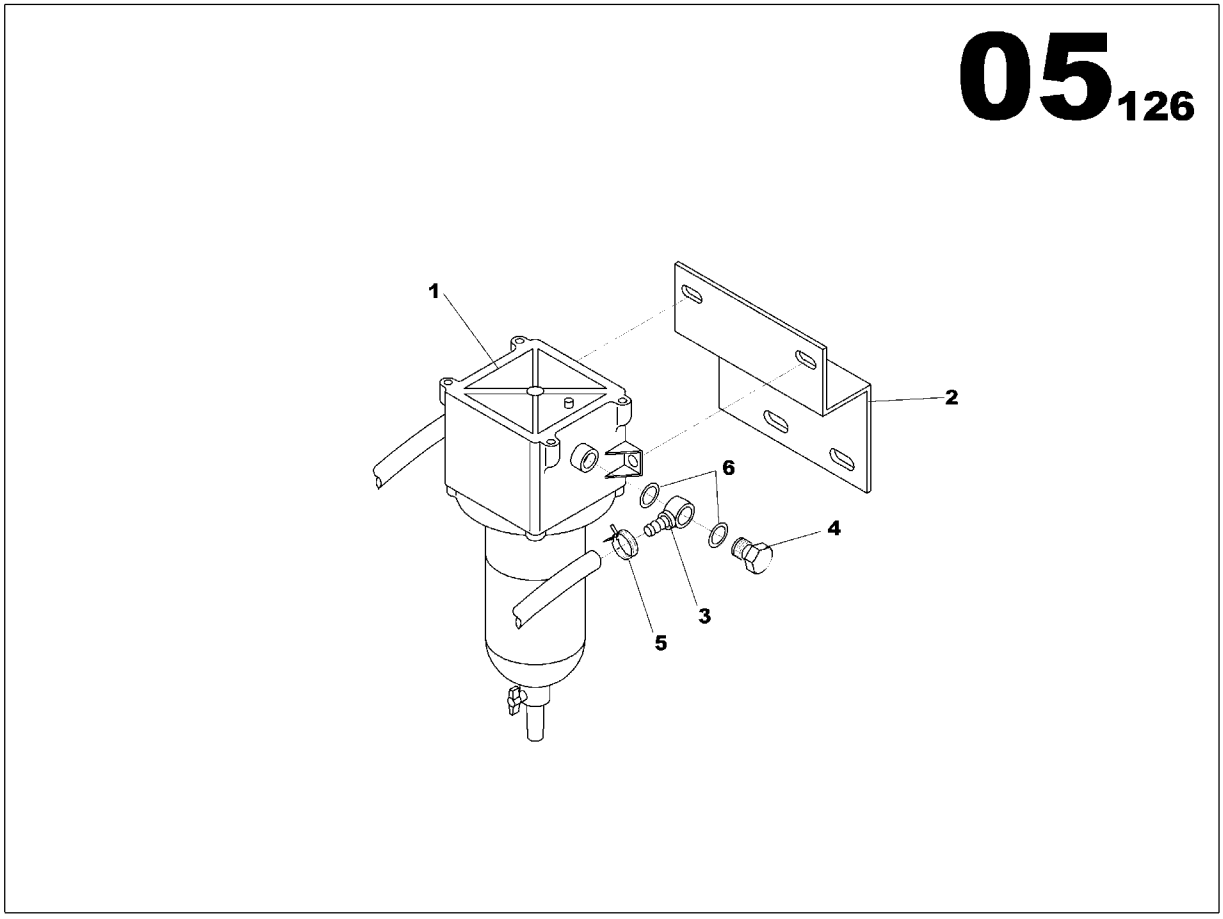

FUEL PREFILTER KIT ASSEMBLY
17137480

Part numbers listed are only parts used in this model

Item	Part No.	Description	Qty	Un	From SN	To SN	Order PN	Page
1	17137472	FUEL PREFILTER KIT ASSEMBLY	1	UN			17137472	69

FUEL PREFILTER KIT ASSEMBLY

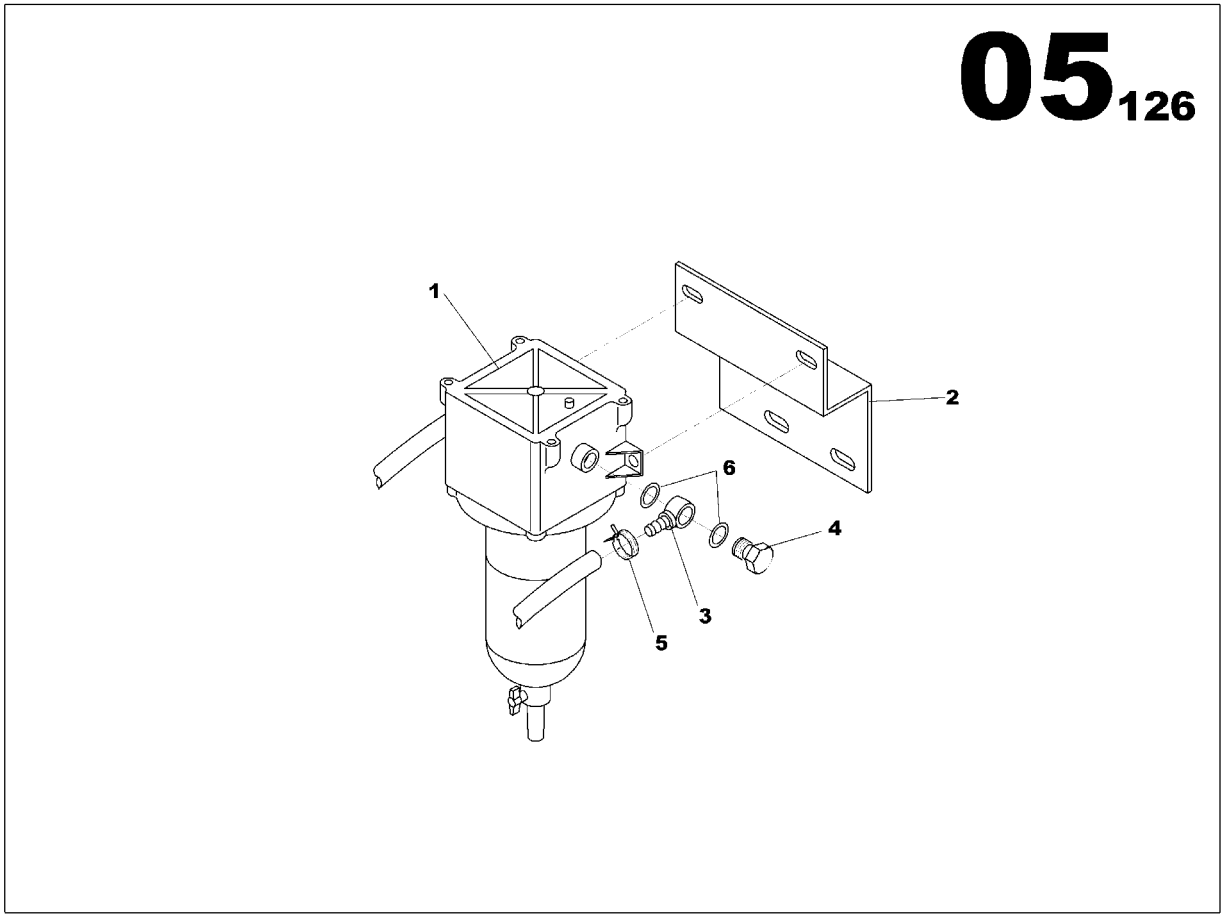

FUEL PREFILTER KIT ASSEMBLY
17137472

Part numbers listed are only parts used in this model

Item	Part No.	Description	Qty	Un	From SN	To SN	Order PN	Page
1	85421451	DECANTATION CARTRIDGE FILTER	1	UN			85421451	71
2	17137308	FUEL PREFILTER BRACKET	1	UN			17137308	
3	17140963	BANJO CONNECTOR MALE D12	2	UN			17140963	
4	85507945	BANJO SCREW M16X150 L28	2	UN			85507945	
5	85509727	SPRING CLAMP D17/19	2	UN			85509727	
6	85507952	GASKET D16x22	4	UN			85507952	

DECANTATION CARTRIDGE FILTER

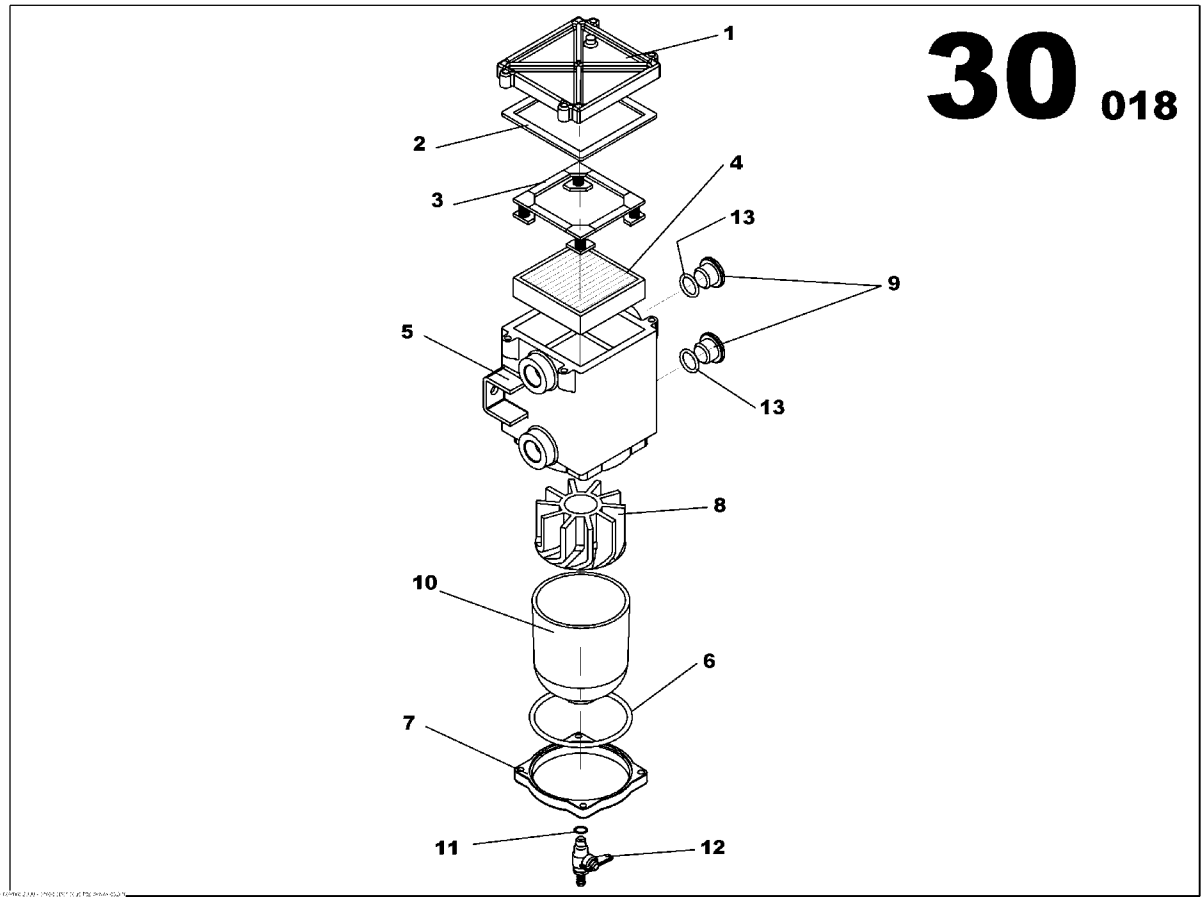

DECANTATION CARTRIDGE FILTER
85421451

Part numbers listed are only parts used in this model

Item	Part No.	Description	Qty	Un	From SN	To SN	Order PN	Page
1	85502557	COVER	1	UN			85502557	
2	85502581	SEPARATOR FILTER LID GASKET	1	UN			85502581	
3	85502599	SEPARATOR FILTER SPRING CASSETTE	1	UN			85502599	
4	85401644	SEPARATOR FILTER CARTRIDGE	1	UN			85401644	
5	85502946	SEPARATOR FILTER HOUSING	1	UN			85502946	
6	85502953	SEPARATOR FILTER BOWL GASKET	1	UN			85502953	
7	85502961	SEPARATOR FILTER BOWL RETAINER RING	1	UN			85502961	
8	85502979	SEPARATOR FILTER CENTRIFUGE	1	UN			85502979	
9	85502987	PLUG	2	UN			85502987	
10	85502995	SEPARATOR FILTER BOWL	1	UN			85502995	
11	85503001	SEPARATOR FILTER O-RING	1	UN			85503001	
12	85503019	SEPARATOR FILTER DRAIN COCK	1	UN			85503019	
13	85425551	GASKET D16x20	2	UN			85425551	

STARTING FUNCTION

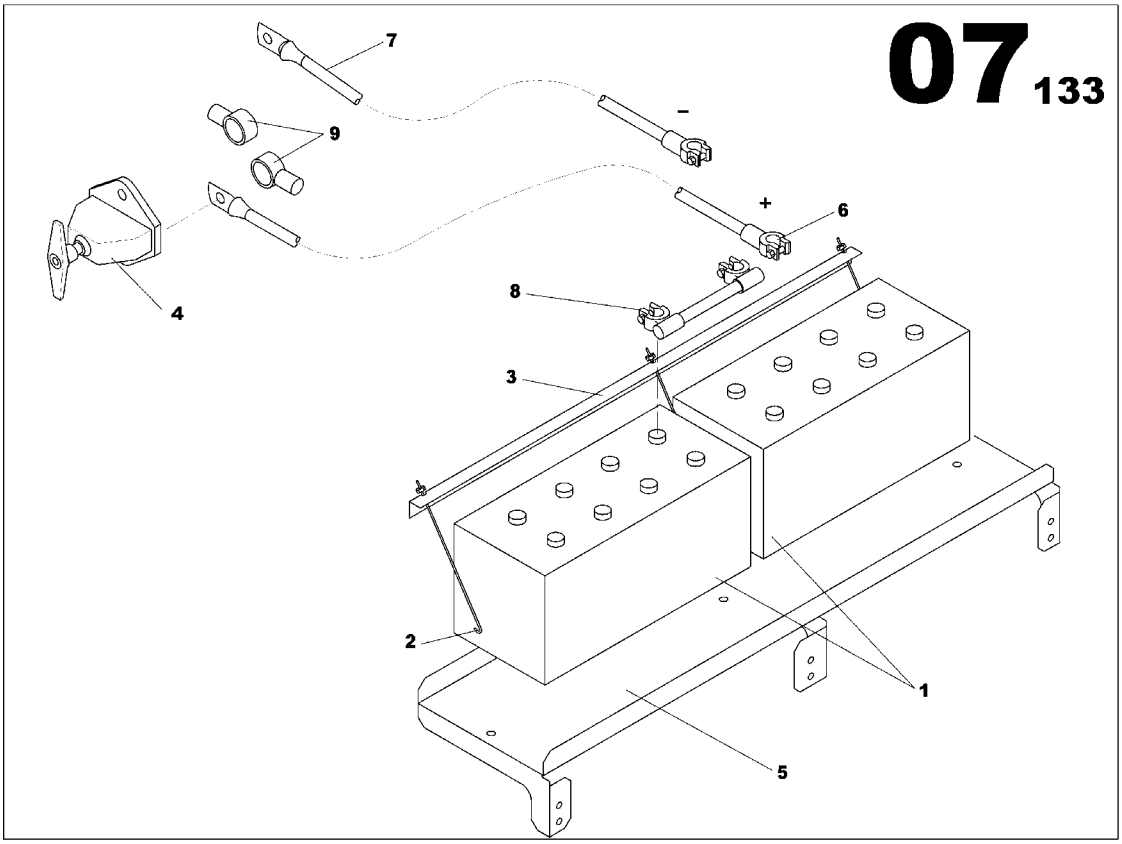

STARTING FUNCTION

Part numbers listed are only parts used in this model

Item	Part No.	Description	Qty	Un	From SN	To SN	Order PN	Page
1	17137688	ELECTRIC STARTER ASSEMBLY	1	UN			17137688	75

ELECTRIC STARTER ASSEMBLY

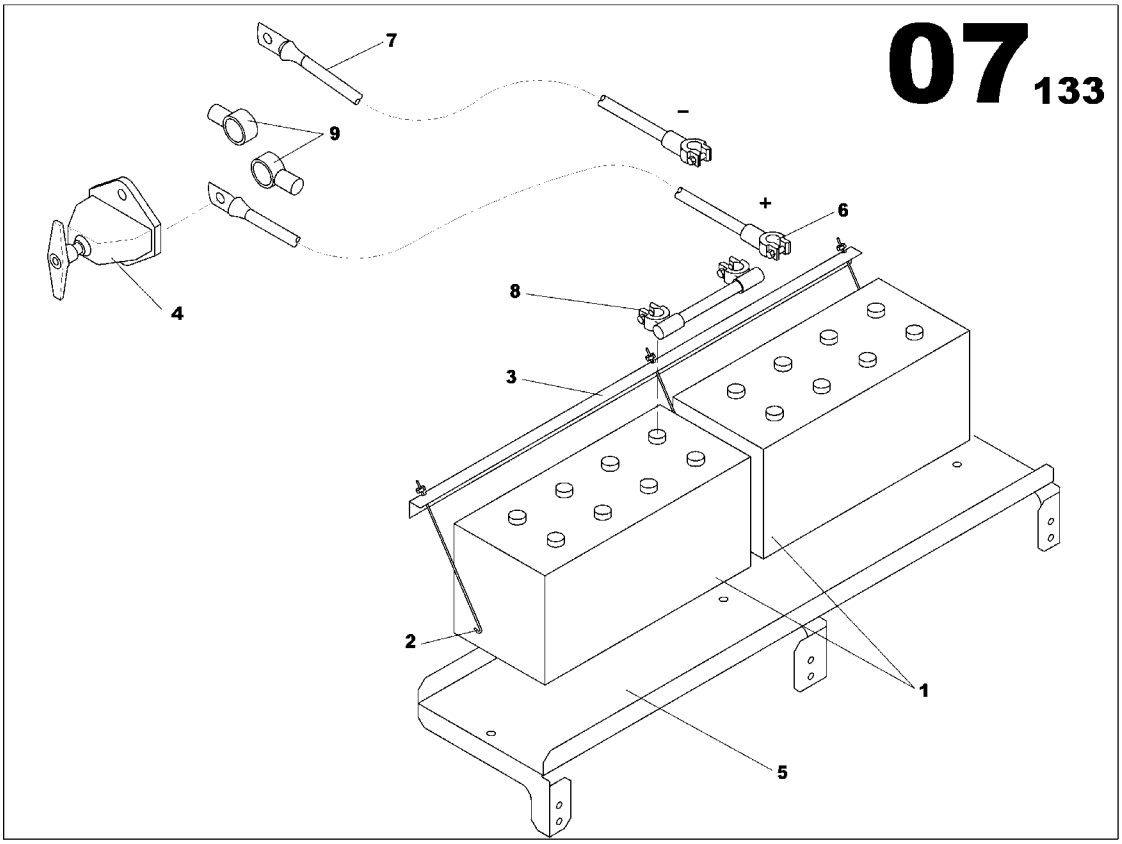

ELECTRIC STARTER ASSEMBLY
17137688

Part numbers listed are only parts used in this model

Item	Part No.	Description	Qty	Un	From SN	To SN	Order PN	Page
1	17137670	ELECTRIC STARTER ASSEMBLY	1	UN			17137670	77

ELECTRIC STARTER ASSEMBLY

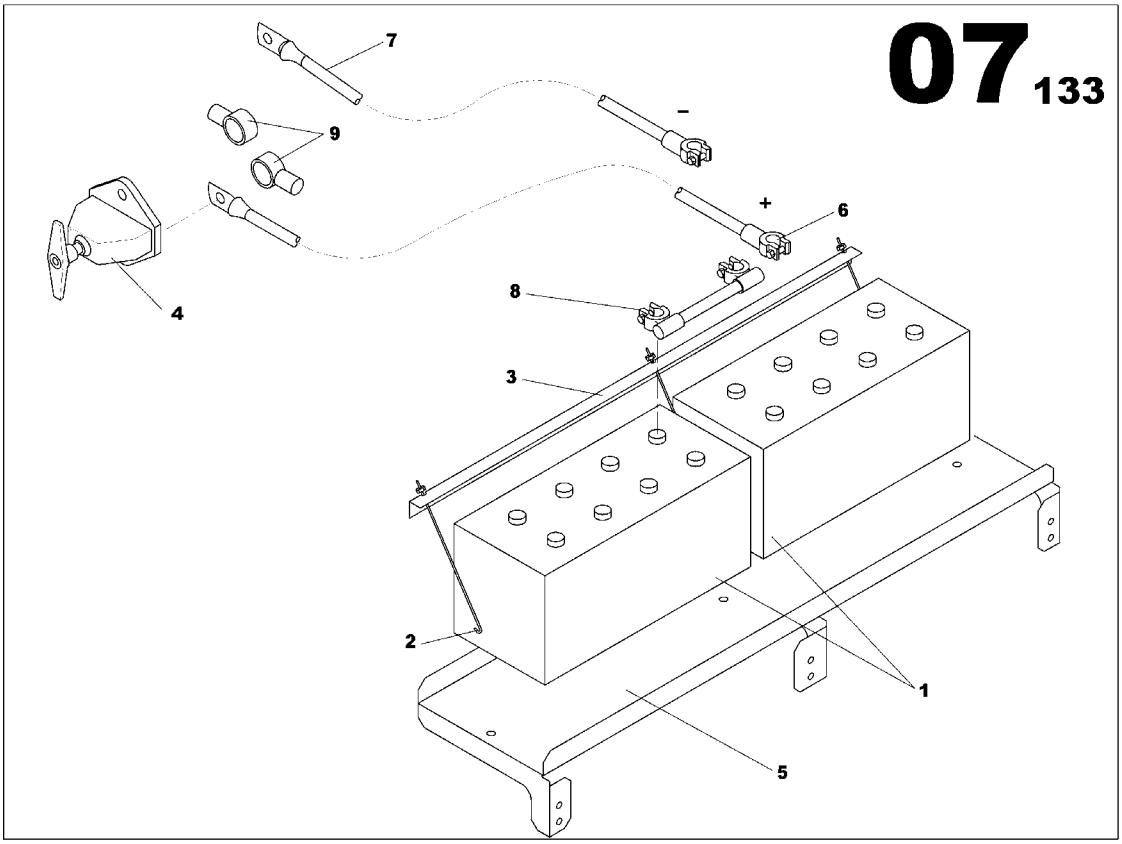

ELECTRIC STARTER ASSEMBLY
17137670

Part numbers listed are only parts used in this model

Item	Part No.	Description	Qty	Un	From SN	To SN	Order PN	Page
1	85416568	STARTING BATTERY 12V 160Ah 650A	2	UN	0	04007706	17141110	
1	17141110	STARTING BATTERY 12V 170Ah 1000AE	2	UN	04007707		17141110	
2	85424331	ACCUMULATOR FIXING STRETCH	3	UN			85424331	
3	85417814	STARTING BATTERY BRACKET ANGLE BAR 3 HOLES	1	UN			85417814	
4	85403723	BATTERY ISOLATOR SWITCH	1	UN			85403723	
5	17137605	BATTERY SUPPORT BRACKET	1	UN			17137605	
6	85417244	BATTERY CABLE(-) 70mm2 L1000 BLACK	1	UN			85417244	
7	85417202	LEFT BATTERY CABLE 50mm2 L195 BLACK	1	UN			85417202	
7	85417293	BATTERY CABLE(+) 50mm2 L1000 RED	1	UN			85417293	
8	85502235	COWL	2	UN			85502235	

EXHAUST FUNCTION

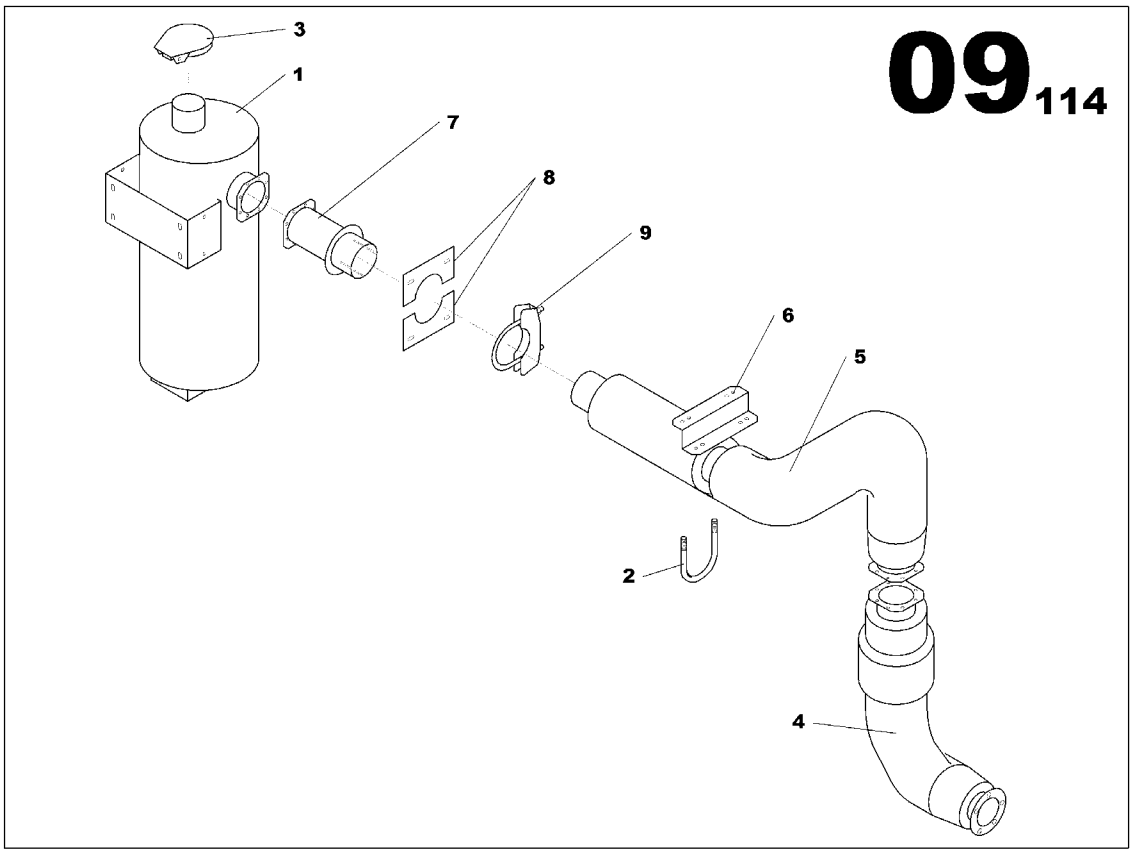

EXHAUST FUNCTION

Part numbers listed are only parts used in this model

Item	Part No.	Description	Qty	Un	From SN	To SN	Order PN	Page
1	17137837	HOT SPOT GUARDS ASSEMBLY	1	UN			17137837	81
2	17137910	EXHAUST MUFFLER M228 ASSEMBLY	1	UN			17137910	83

HOT SPOT GUARDS ASSEMBLY

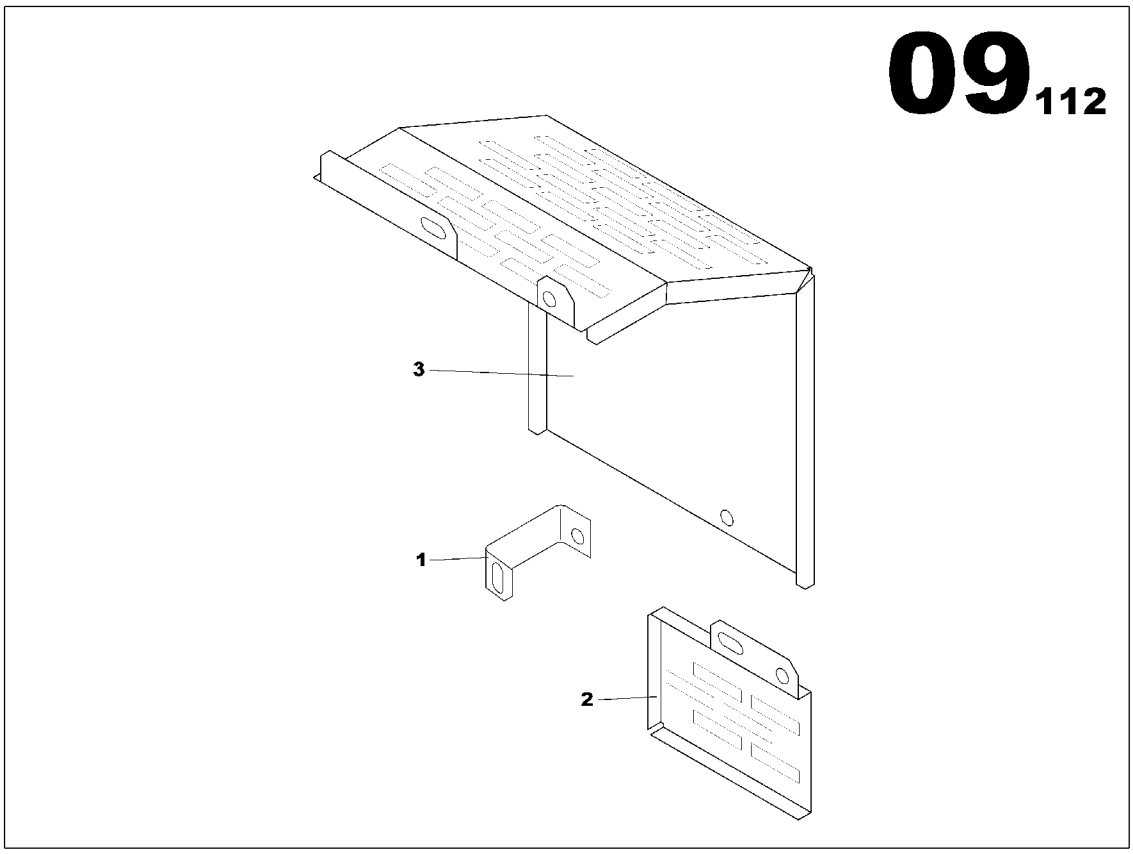

HOT SPOT GUARDS ASSEMBLY
17137837

Part numbers listed are only parts used in this model

Item	Part No.	Description	Qty	Un	From SN	To SN	Order PN	Page
1	17138223	FIXING PLATE	1	UN			17138223	
2	17138231	HOT SPOT GUARD	1	UN			17138231	
3	17138249	HOT SPOT GUARD	1	UN			17138249	

EXHAUST MUFFLER M228 ASSEMBLY

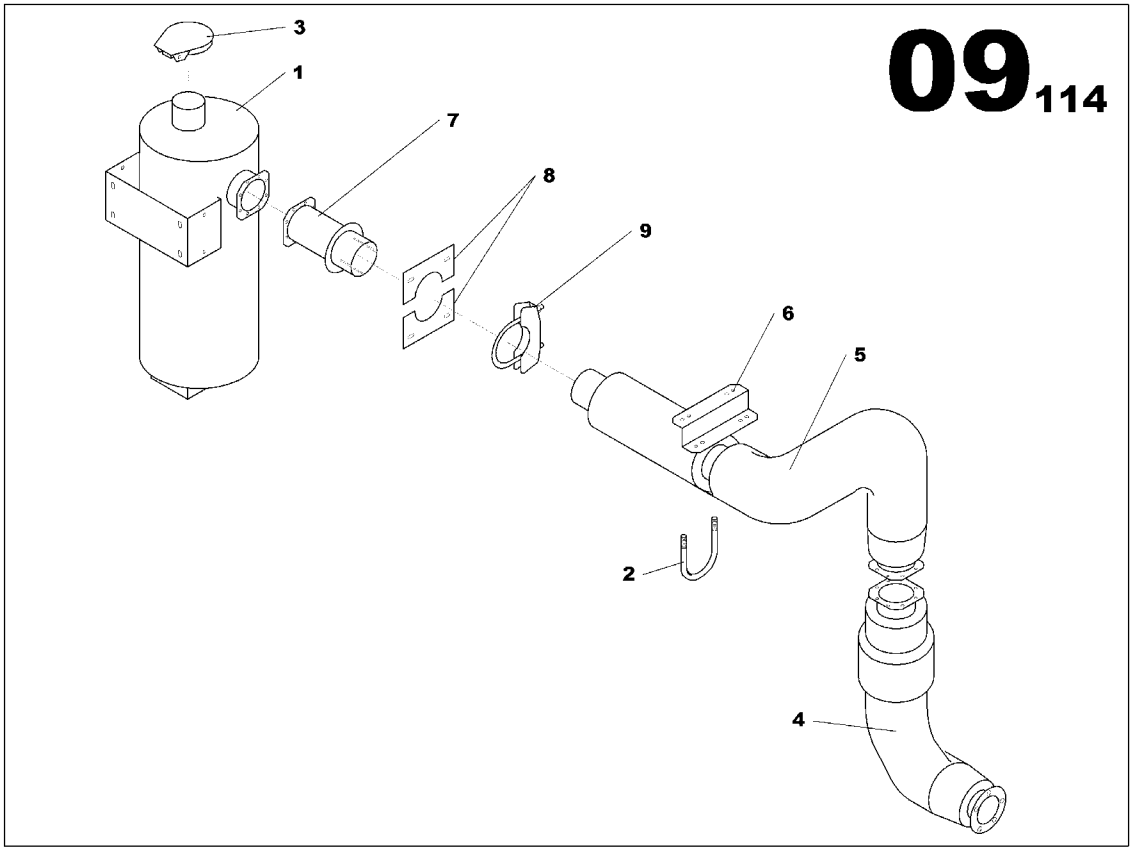

EXHAUST MUFFLER M228 ASSEMBLY
17137910

Part numbers listed are only parts used in this model

Item	Part No.	Description	Qty	Un	From SN	To SN	Order PN	Page
1	17137902	EXHAUST MUFFLER M228 ASSEMBLY	1	UN			17137902	85

EXHAUST MUFFLER M228 ASSEMBLY

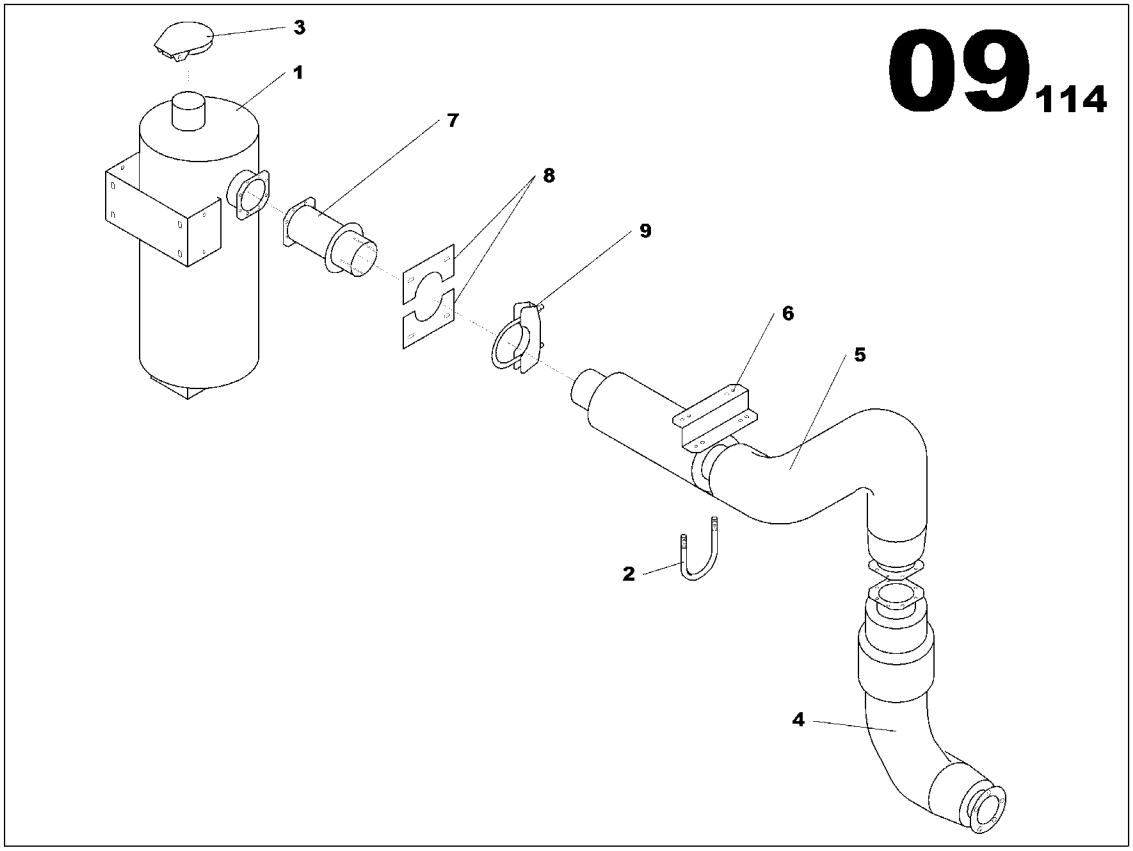

EXHAUST MUFFLER M228 ASSEMBLY
17137902

Part numbers listed are only parts used in this model

Item	Part No.	Description	Qty	Un	From SN	To SN	Order PN	Page
1	85423614	40dB MUFFLER	1	UN			85423614	
2	85496933	HOSE CLAMP	1	UN			85496933	
3	85622256	EXHAUST RAIN FLAP D193	1	UN			85622256	
4	85629863	EXHAUST PIPE DN125 VOLVO	1	UN			85629863	
5	17137894	EXHAUST PIPE D140 VO M228	1	UN			17137894	
6	17137936	EXHAUST HOSE M228 BRACKET	1	UN			17137936	
7	17137993	MUFFLER EXTENSION	1	UN			17137993	
8	85424513	EXHAUST PASSAGE PANEL M405	2	UN			85424513	
9	85417780	HOSE CLAMP D140	1	UN			85417780	

FRAME FUNCTION

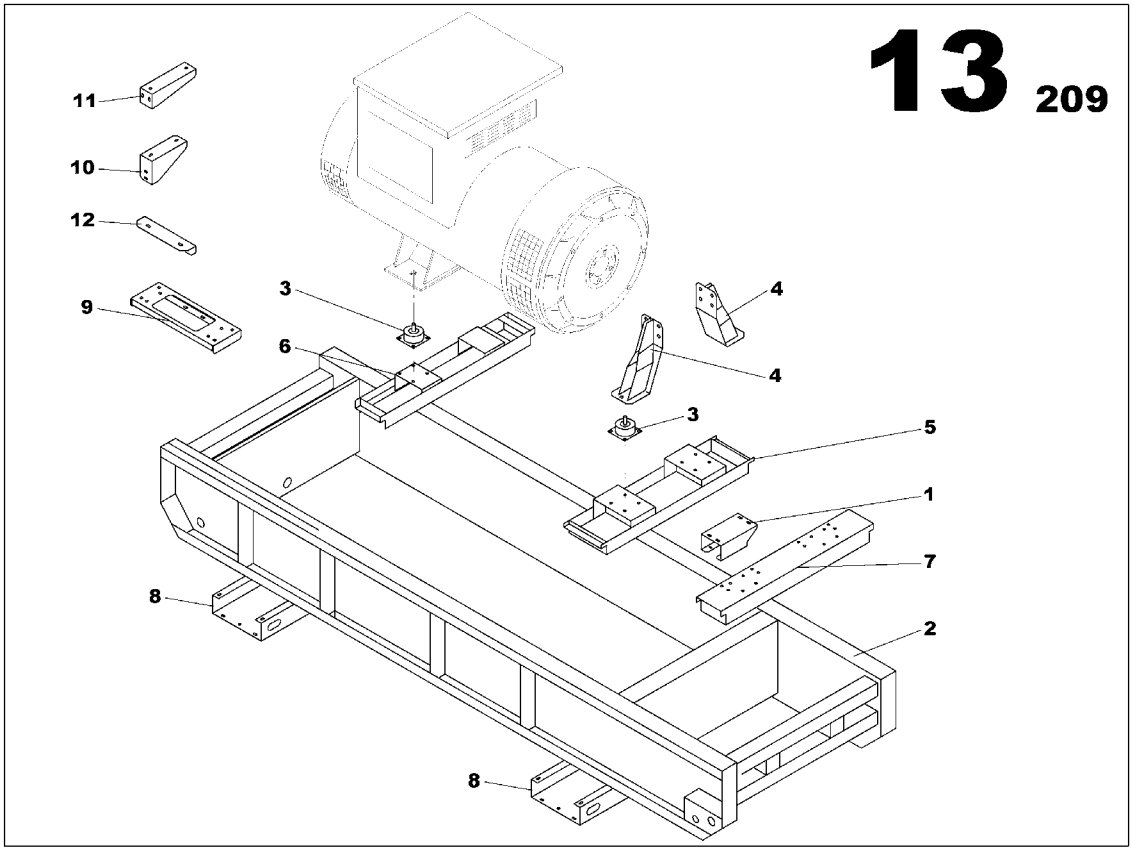

FRAME FUNCTION

Part numbers listed are only parts used in this model

Item	Part No.	Description	Qty	Un	From SN	To SN	Order PN	Page
1	17138108	FRAME ASSEMBLY	1	UN			17138108	89
2	85427748	G440 ACCESSORY ASSEMBLY	1	UN			85427748	93

FRAME ASSEMBLY

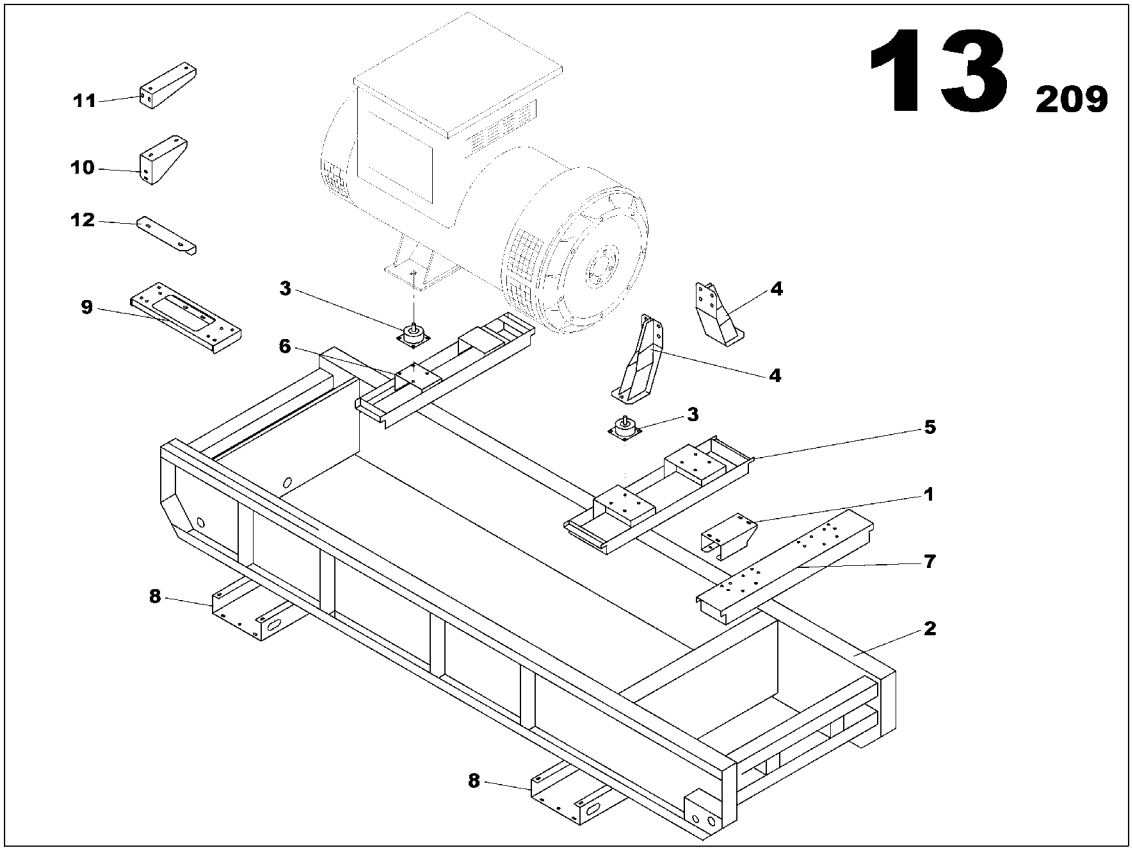

FRAME ASSEMBLY
17138108

Part numbers listed are only parts used in this model

Item	Part No.	Description	Qty	Un	From SN	To SN	Order PN	Page
1	17138090	FRAME M228 ASSEMBLY	1	UN			17138090	91

FRAME M228 ASSEMBLY

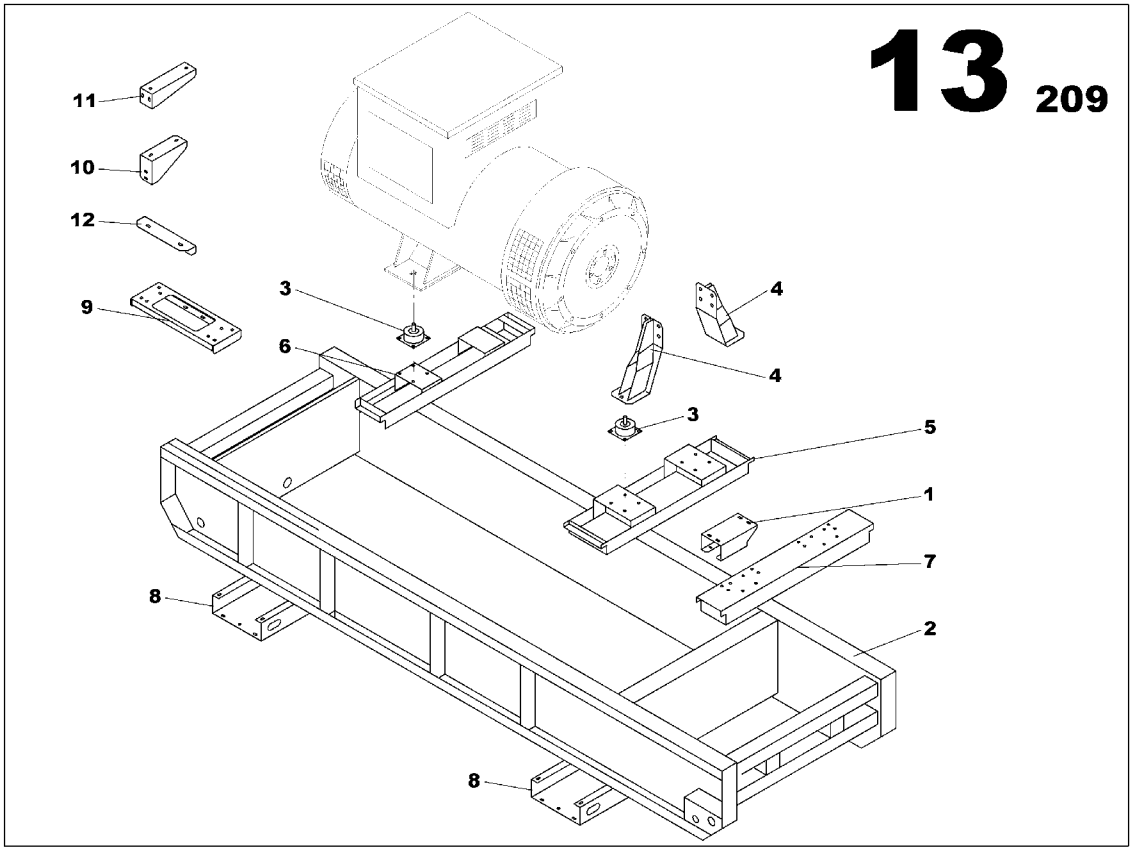

FRAME M228 ASSEMBLY
17138090

Part numbers listed are only parts used in this model

Item	Part No.	Description	Qty	Un	From SN	To SN	Order PN	Page
1	17137084	RADIATOR BRACKET	1	UN			17137084	
1	17137084	RADIATOR BRACKET	2	UN			17137084	
2	17138033	FRAME VO TAD1032/TAD1242 M228	1	UN			17138033	
2	17138033	FRAME VO TAD1032/TAD1242 M228	1	UN			17138033	
3	85401875	ANTI-VIBRATION MOUNT 0800daN 8.5mm	4	UN			85401875	
4	85630150	ENGINE SUPPORT VO 12L LEFT RIGHT SIDE	2	UN			85630150	
5	17138355	ENGINE TRAVERSE M228	1	UN			17138355	
6	17138371	ALTERNATOR TRAVERSE M228	1	UN			17138371	
7	17138397	RADIATOR TRAVERSE	1	UN			17138397	
7	17138397	RADIATOR TRAVERSE	1	UN			17138397	
8	17138439	FORK LIFT CHANNEL	2	UN			17138439	
9	17132218	CONTROL PANEL BRACKET M227	1	UN			17132218	
10	17139726	BRACKET SQUARE	1	UN			17139726	
11	17140112	AIPR BRACKET	1	UN			17140112	
12	17140120	AIPR BRACKET	1	UN			17140120	

G440 ACCESSORY ASSEMBLY

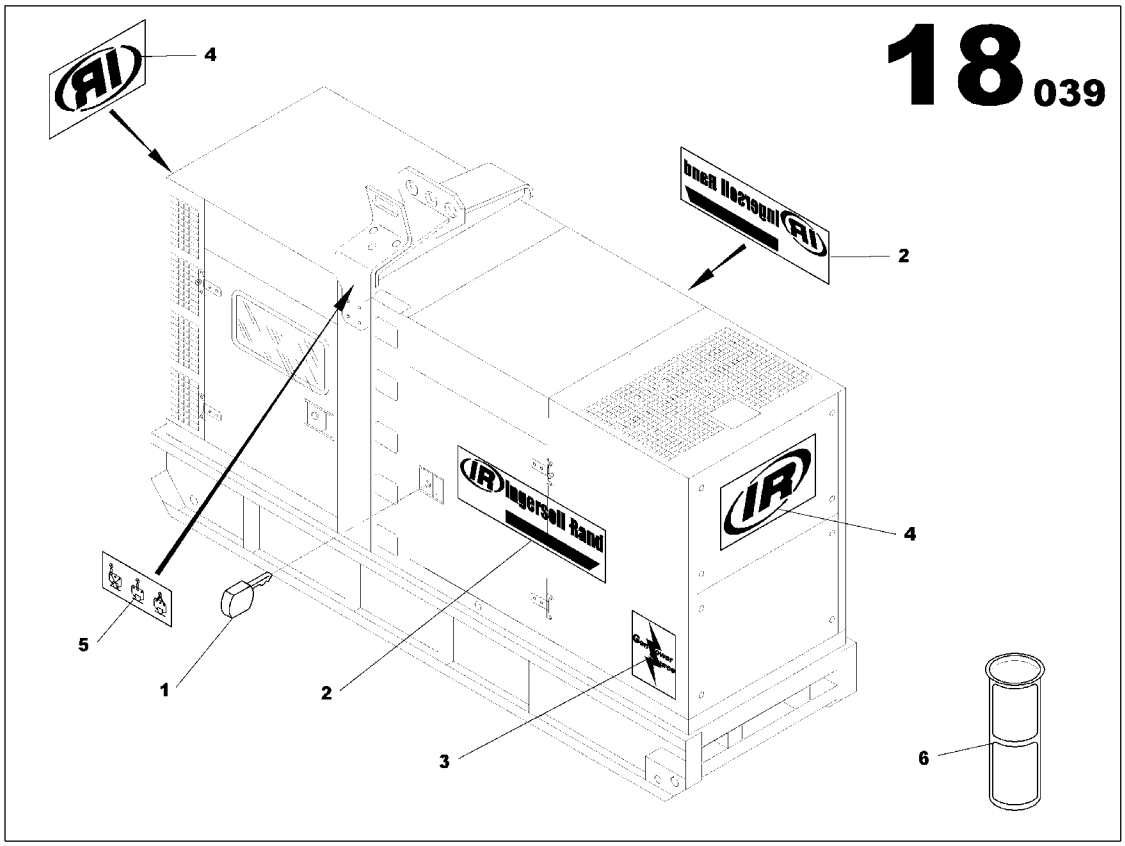

G440 ACCESSORY ASSEMBLY
85427748

Part numbers listed are only parts used in this model

Item	Part No.	Description	Qty	Un	From SN	To SN	Order PN	Page
1	85509263	WBH LATCHE KEY	1	UN			85509263	
2	85503886	STICKER G440	2	UN			85503886	
3	85506467	STICKER	1	UN			85506467	
4	85631927	DECALS ASSEMBLY	1	UN			85631927	95
5	22207054	STICKER OPERATING INSTRUCTIONS	1	UN			22207054	
6	85633386	FUEL FILTER-SCREEN	1	UN			85633386	

DECALS ASSEMBLY

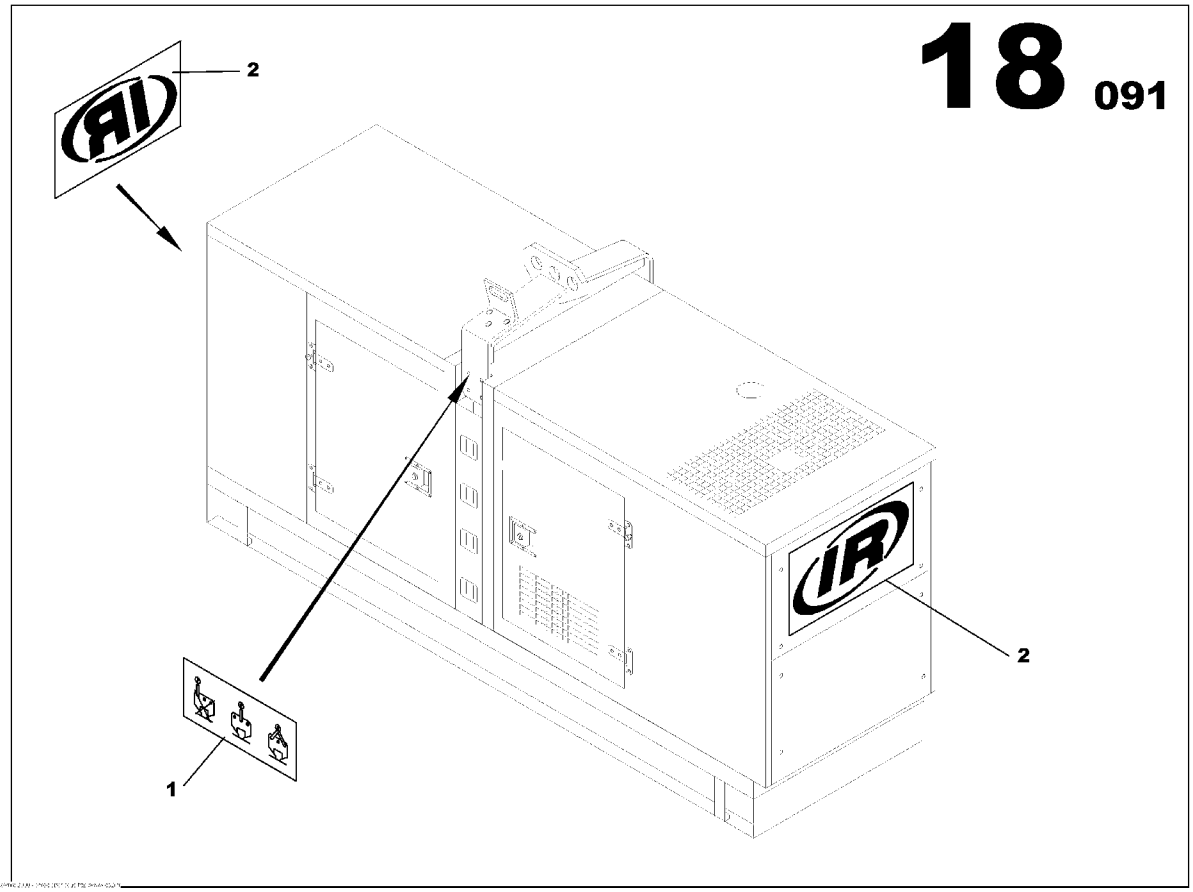

DECALS ASSEMBLY
85631927

Part numbers listed are only parts used in this model

Item	Part No.	Description	Qty	Un	From SN	To SN	Order PN	Page
1	85500213	STICKER IR	2	UN			85500213	
2	85623684	STICKER CANOPY MANUTENTION SYMBOL	1	UN			85623684	

CANOPY FUNCTION

CANOPY FUNCTION

Part numbers listed are only parts used in this model

Item	Part No.	Description	Qty	Un	From SN	To SN	Order PN	Page
1	17138181	FITTINGS M228 VO TAD1242GE ASSEMBLY	1	UN			17138181	99
2	17138876	CANOPY M228 ASSEMBLY	1	UN			17138876	111
3	17139486	CENTRAL LIFTING ARCH ASSEMBLY	1	UN			17139486	117
4	85634616	EMERGENCY STOP PANEL ASSEMBLY	1	UN			85634616	
5	85407906	EARTH ROD WITH CABLE CANOPY ASSEMBLY	1	UN			85407906	121

FITTINGS M228 VO TAD1242GE ASSEMBLY

FITTINGS M228 VO TAD1242GE ASSEMBLY
17138181

Part numbers listed are only parts used in this model

Item	Part No.	Description	Qty	Un	From SN	To SN	Order PN	Page
1	17138173	M228 MISCELLANEOUS ASSEMBLY	1	UN			17138173	101

M228 MISCELLANEOUS ASSEMBLY

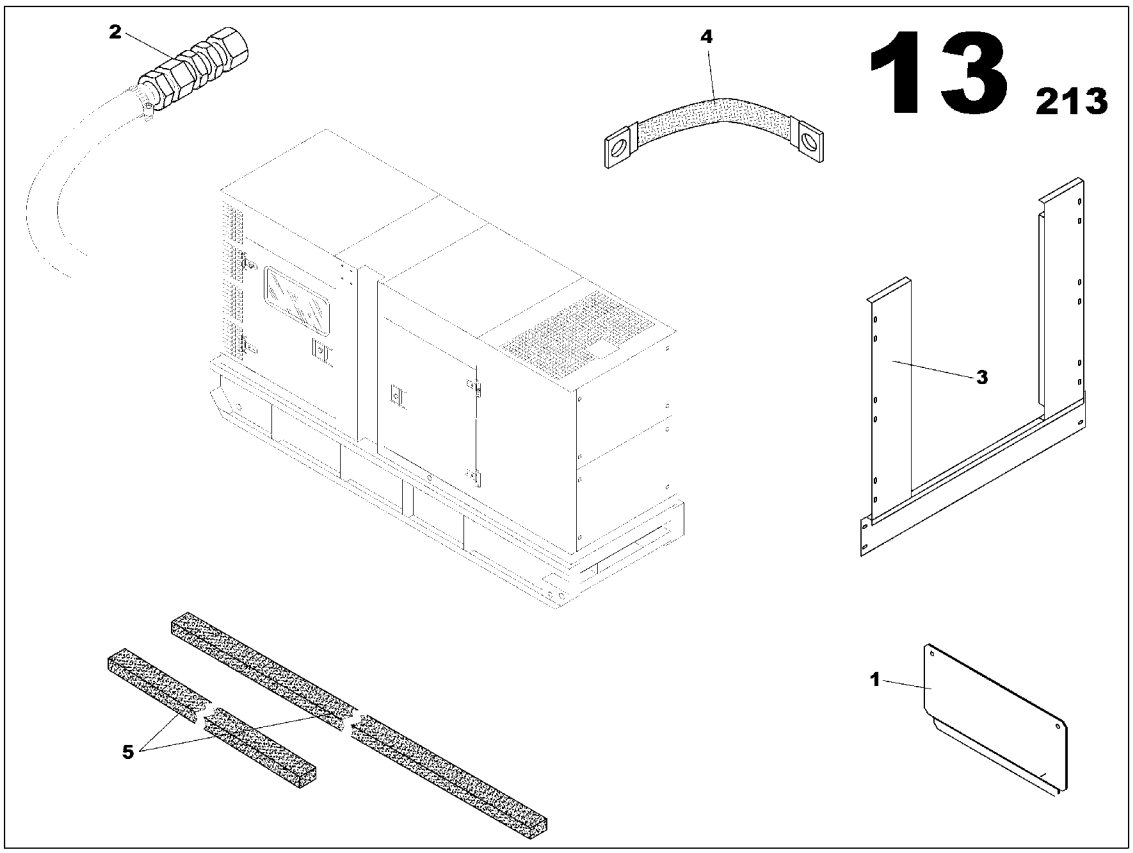

M228 MISCELLANEOUS ASSEMBLY
17138173

Part numbers listed are only parts used in this model

Item	Part No.	Description	Qty	Un	From SN	To SN	Order PN	Page
1	17139809	CABLE OUTLET PLATE	1	UN			17139809	
2	17137175	OIL CRANKCASE	1	UN			17137175	103
3	17139098	RADIATOR BASE M228 PLATE ASSEMBLY	1	UN			17139098	105
4	85407922	GROUND WIRES ASSEMBLY	1	UN			85407922	107
5	17141003	CANOPY/FRAME M228 GASKET ASSEMBLY	1	UN			17141003	109

OIL CRANKCASE

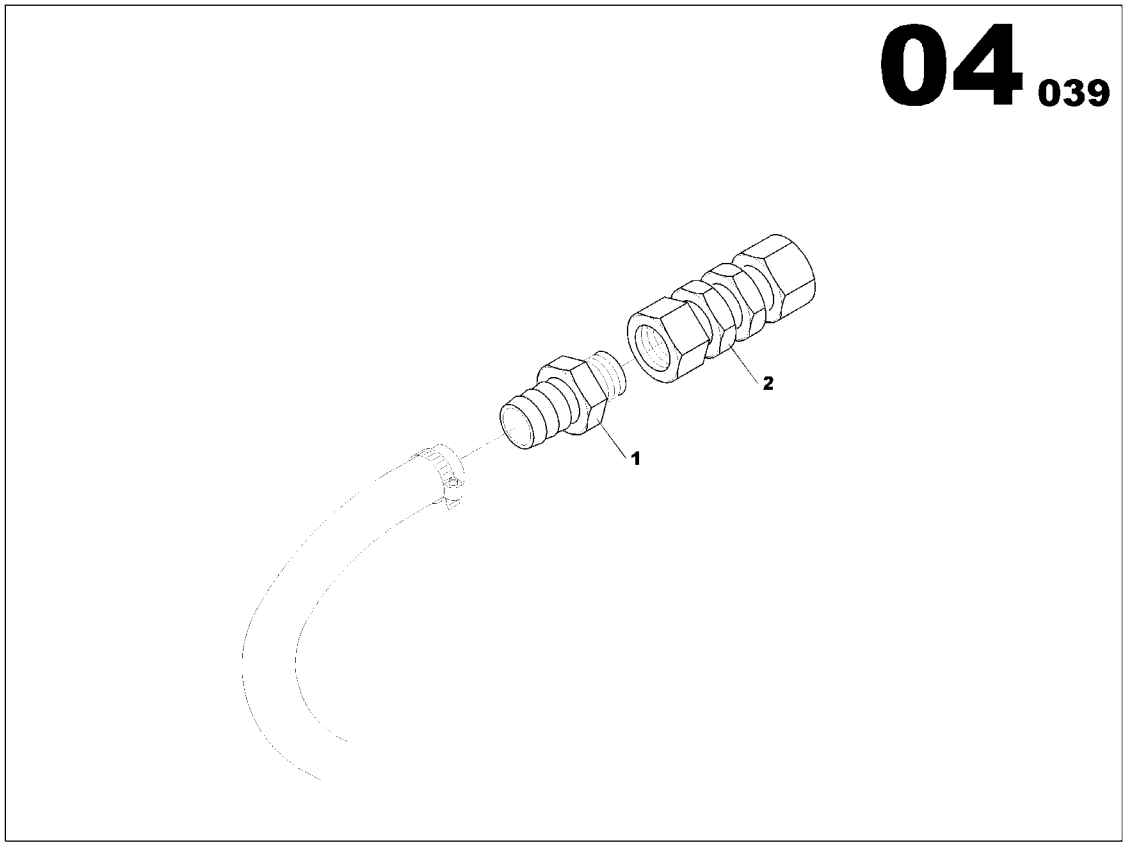

OIL CRANKCASE
17137175

Part numbers listed are only parts used in this model

Item	Part No.	Description	Qty	Un	From SN	To SN	Order PN	Page
1	17140955	PIPE UNION MAL/MAL 1G	1	UN			17140955	
2	17140971	PIPE UNION FEM/FEM 1G	1	UN			17140971	

RADIATOR BASE M228 PLATE ASSEMBLY

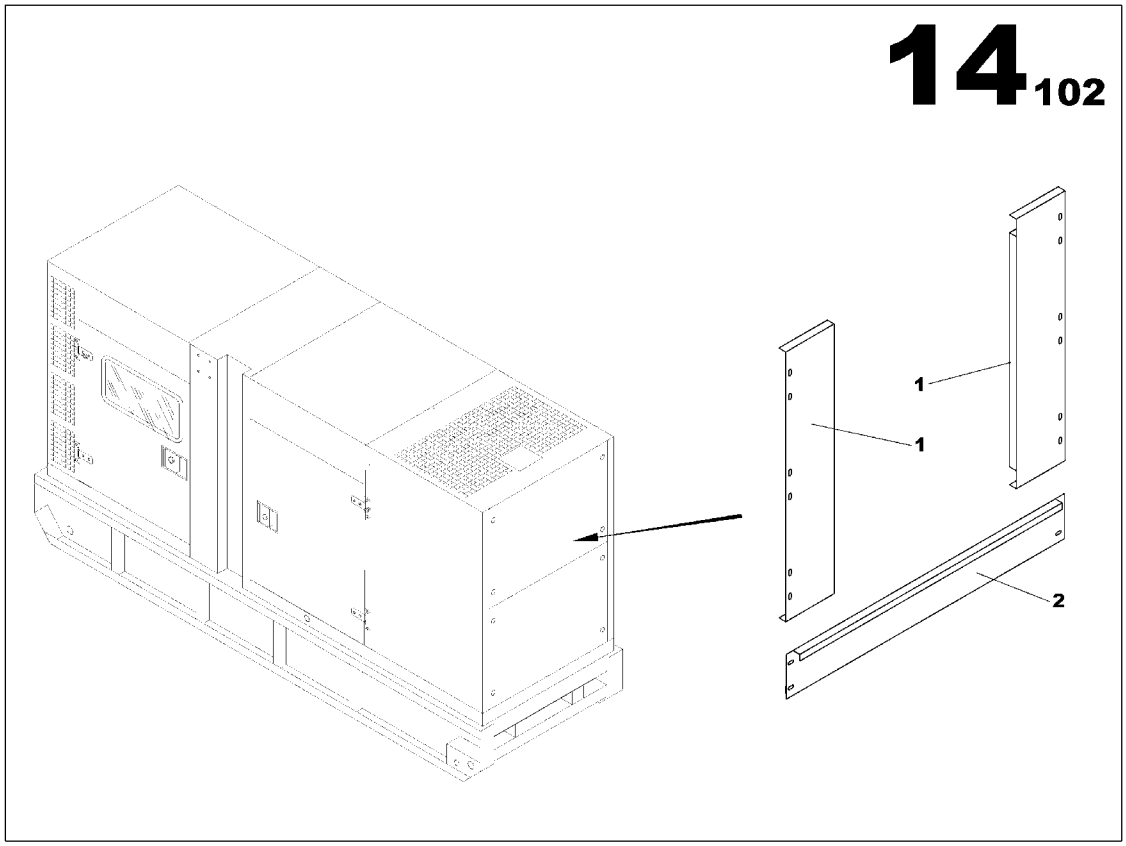

RADIATOR BASE M228 PLATE ASSEMBLY
17139098

Part numbers listed are only parts used in this model

Item	Part No.	Description	Qty	Un	From SN	To SN	Order PN	Page
1	17139072	RADIATOR LEFT/RIGHT PANEL M228	2	UN			17139072	
2	17139080	RADIATOR PANEL LOWER M228	1	UN			17139080	

GROUND WIRES ASSEMBLY

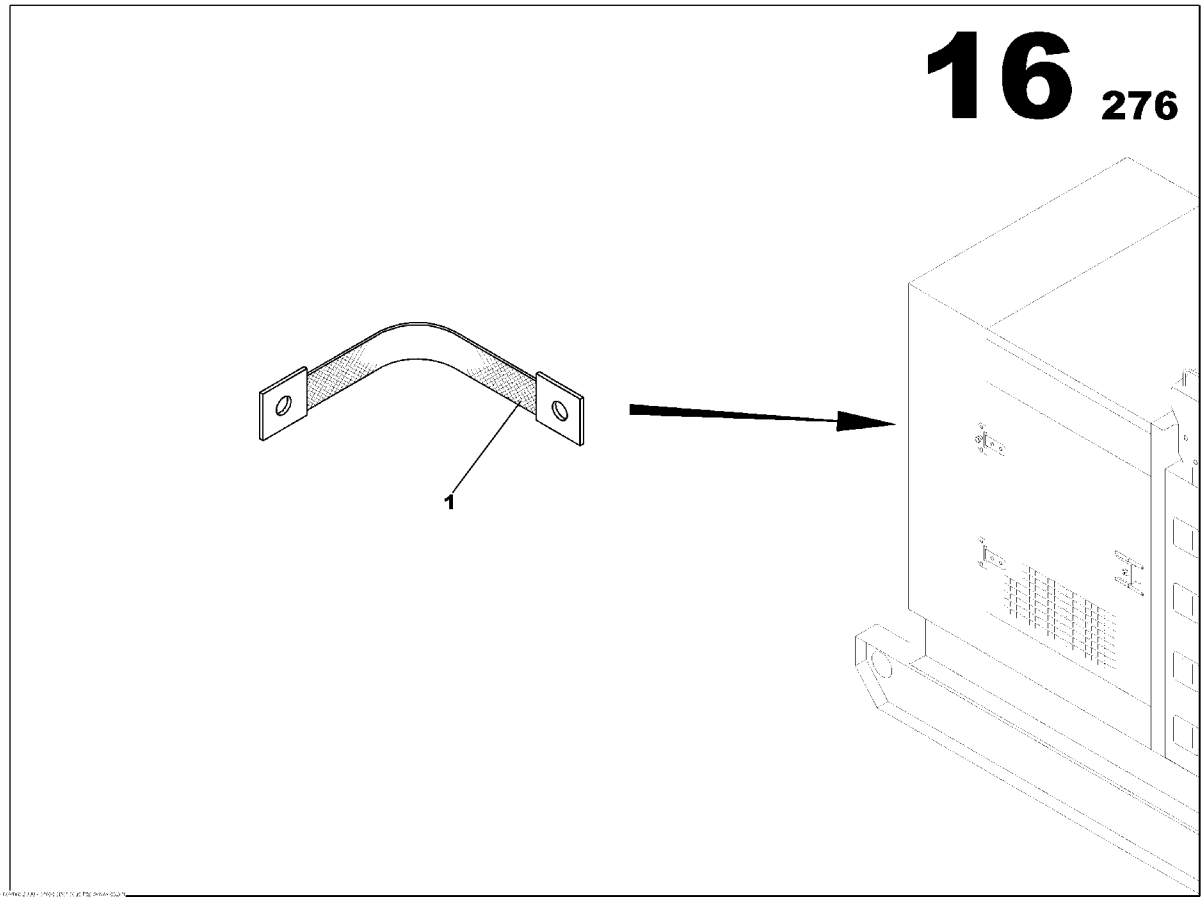

GROUND WIRES ASSEMBLY
85407922

Part numbers listed are only parts used in this model

Item	Part No.	Description	Qty	Un	From SN	To SN	Order PN	Page
1	85406460	GROUND WIRE 16mm2	4	UN			85406460	

CANOPY/FRAME M228 GASKET ASSEMBLY

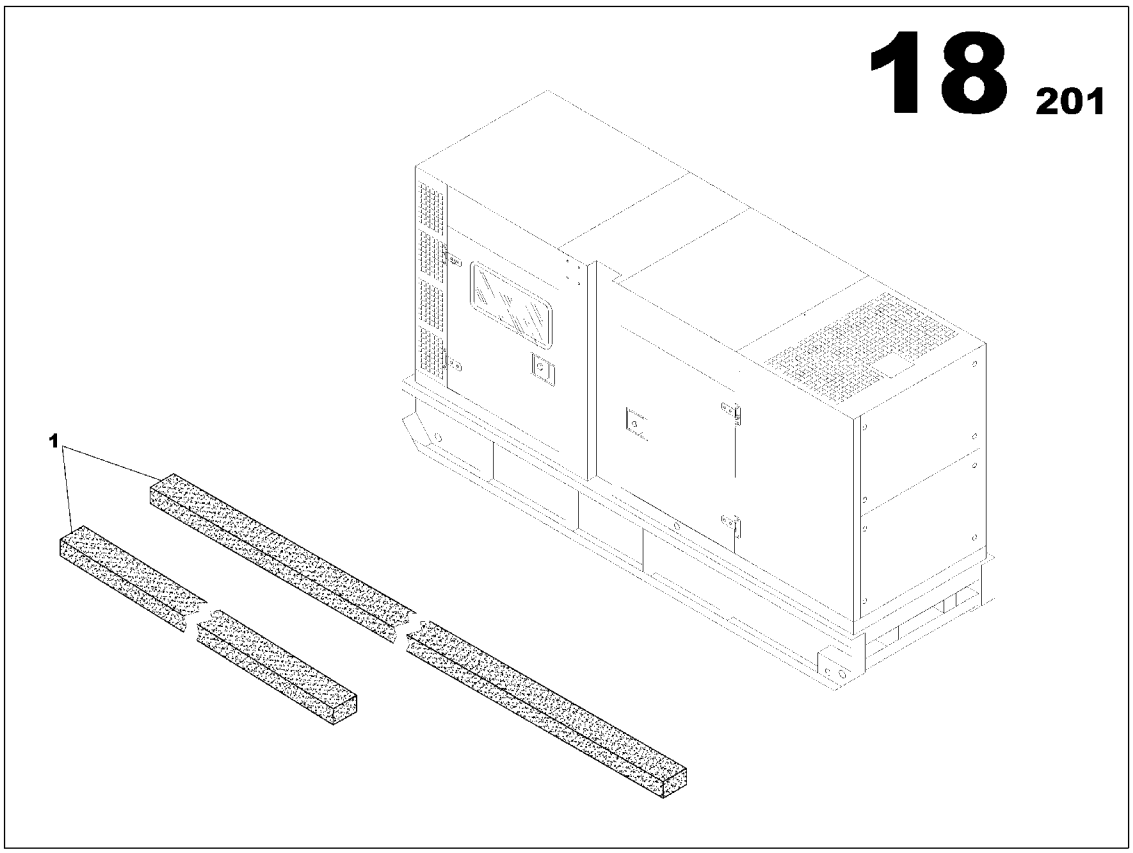

CANOPY/FRAME M228 GASKET ASSEMBLY
17141003

Part numbers listed are only parts used in this model

Item	Part No.	Description	Qty	Un	From SN	To SN	Order PN	Page
1	17133349	LINEAR SEAL	1.32	M			17133349	
1	17133349	LINEAR SEAL	3.16	M			17133349	

CANOPY M228 ASSEMBLY

14 099

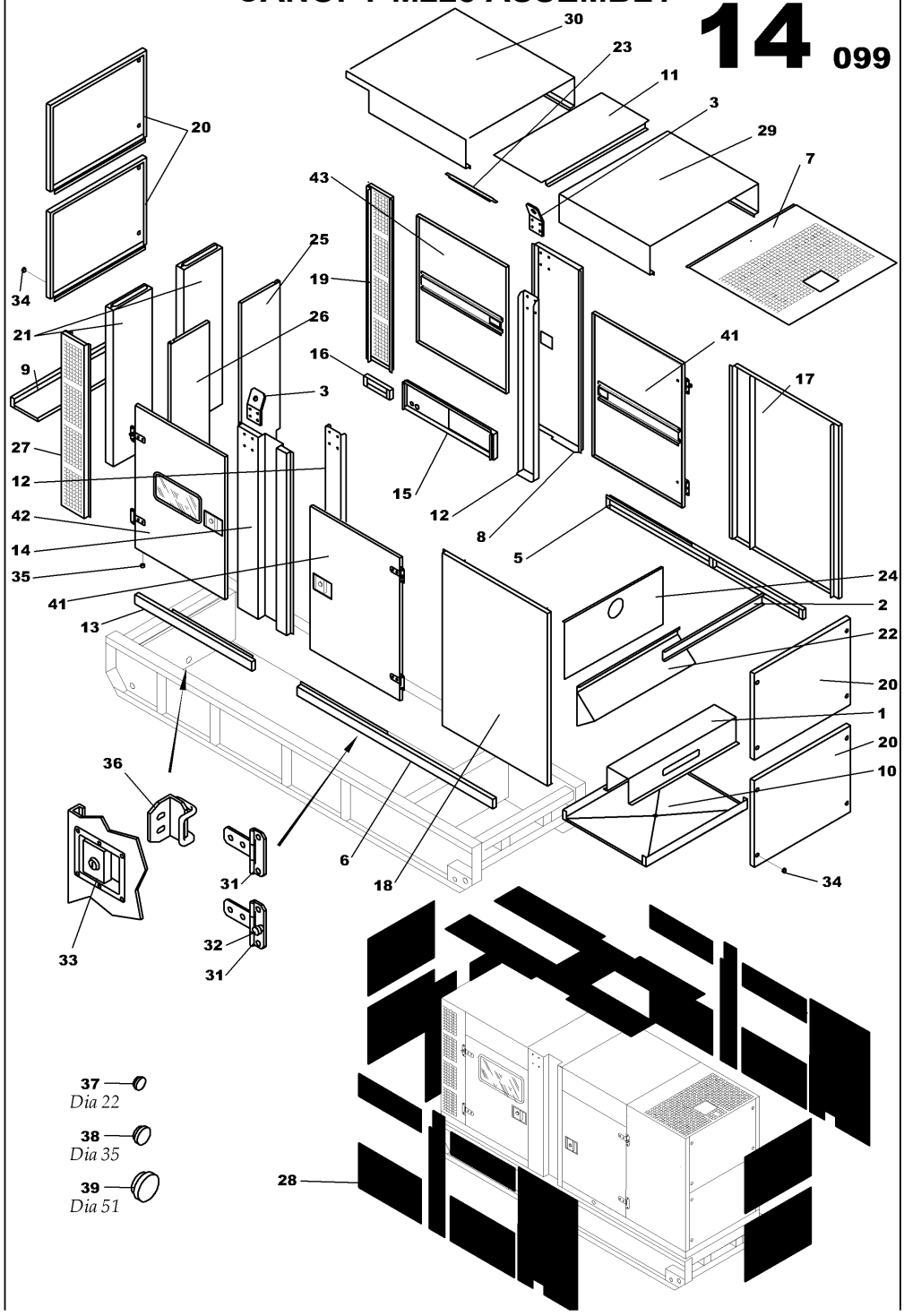

Printed with FinePrint - purchase at www.fineprint.com

CANOPY M228 ASSEMBLY
17138876

Part numbers listed are only parts used in this model

Item	Part No.	Description	Qty	Un	From SN	To SN	Order PN	Page
1	17138868	CANOPY M228 ASSEMBLY	1	UN			17138868	113

CANOPY M228 ASSEMBLY

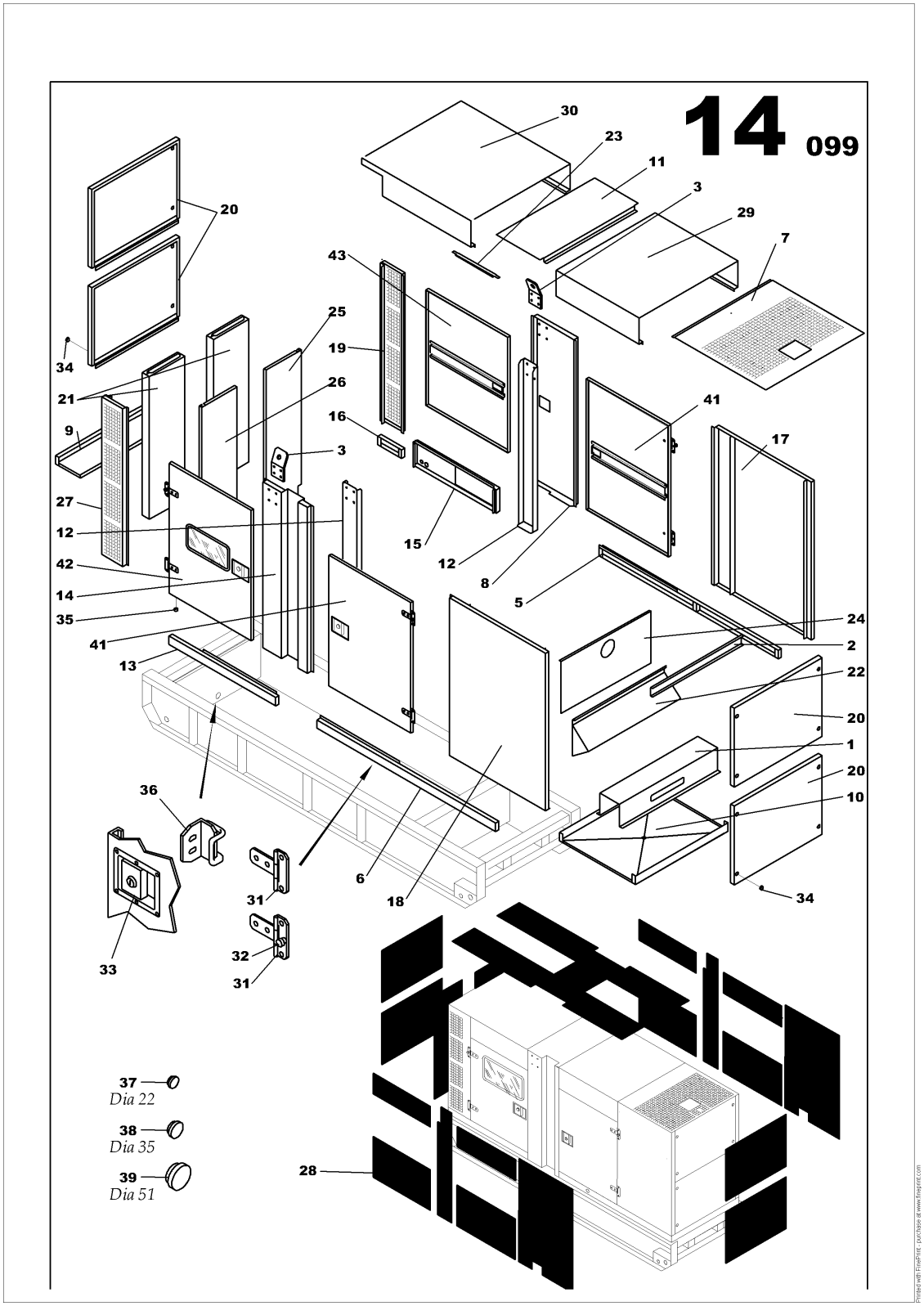

CANOPY M228 ASSEMBLY
17138868

Part numbers listed are only parts used in this model

Item	Part No.	Description	Qty	Un	From SN	To SN	Order PN	Page
1	17137829	MUFFLER BRACKET	1	UN			17137829	
2	17137886	MUFFLER BRACKET	1	UN			17137886	
3	85497386	LIFTING BRACKET M424/425/426	2	UN			85497386	
5	17138538	BASEFRAME SIDE M228	1	UN			17138538	
6	17138546	BASEFRAME SIDE M228	1	UN			17138546	
7	17138553	AIR OUTLET LOUVER M228	1	UN			17138553	
8	17138561	SIDE SUPPORT ARCH RIGHT M228	1	UN			17138561	
9	17138579	REAR CLOSURE PANEL CANOPY M228	1	UN			17138579	
10	17138587	HOOD FRONT UNDERSHEETING M228	1	UN			17138587	
11	17138595	HOOD SUPPORT ARCH M228	1	UN			17138595	
12	17138686	SUPPORT ARCH M228/229	2	UN			17138686	
13	17138694	BASEFRAME SIDE M228	1	UN			17138694	
14	17138777	SIDE SUPPORT ARCH LEFT M228	1	UN			17138777	
15	17138819	BASEFRAME SIDE M228	1	UN			17138819	
16	17138827	BASEFRAME SIDE M228	1	UN			17138827	
17	17138991	RIGHT FRONT PLENUM PANEL M228	1	UN			17138991	
18	17139007	LEFT FORWARD PLENUM PANEL M228	1	UN			17139007	
19	17139015	RIGHT REAR PLENUM PANEL M228	1	UN			17139015	
20	17139023	M228/229 HEAD/REAR PANEL	4	UN			17139023	
21	17139031	SOUND SHIELD M228/229	2	UN			17139031	
22	17139049	AIR DEFLECTOR M228 FRONT	1	UN			17139049	
23	17139056	CANOPY CENTRAL ARCH ISOLATION BRACKET M228/M229	3	UN			17139056	
24	17139064	RADIATOR UPPER PANEL M228	1	UN			17139064	
25	17139247	AIR DEFLECTOR M228 REAR RIGHT	1	UN			17139247	
26	17139254	AIR DEFLECTOR M228 REAR LEFT	1	UN			17139254	
27	17139320	LEFT REAR PLENUM PANEL M228	1	UN			17139320	
28	17139346	SOUNDPROOF PANELS BATCH M228	1	UN			17139346	
29	17139387	CANOPY FRONT TOP M228	1	UN			17139387	
30	17139395	CANOPY REAR TOP M228	1	UN			17139395	
31	85406155	DOOR HINGE	8	UN			85406155	
32	85406189	ANTI-VIBRATION MOUNT 140daN 15mm	4	UN			85406189	
33	85509305	CANOPY DOOR LOCK KEY LOCK *-Key: N° 455 supply without key*	4	UN			85509305	
34	85417186	PLUG D22.8	16	UN			85417186	
35	85406213	PLUG D6.9	6	UN			85406213	
36	85492460	STRIKER PLATE M400 CANOPY DOOR	4	UN			85492460	
37	17139577	PLUG D22	1	UN			17139577	

CANOPY M228 ASSEMBLY

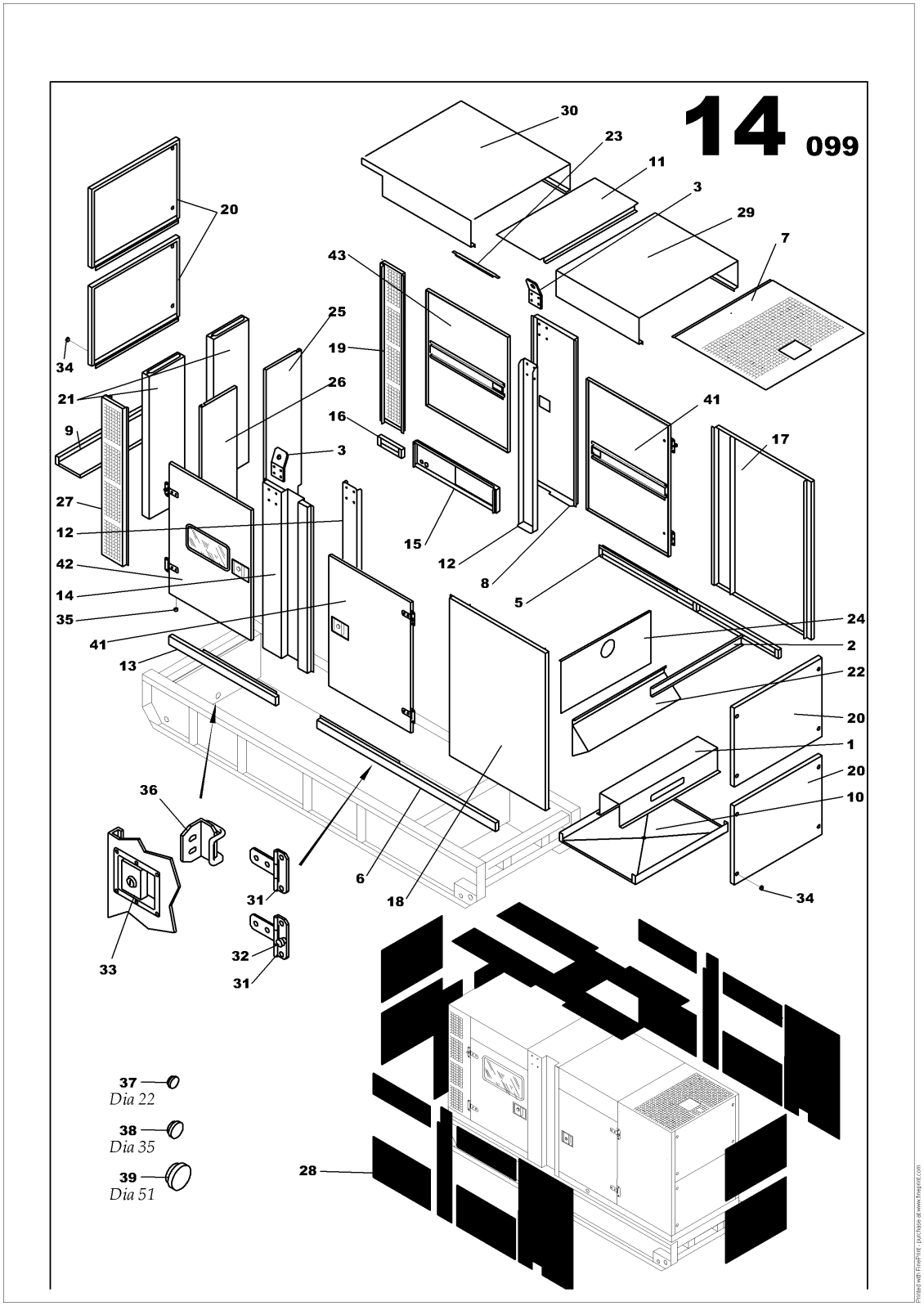

CANOPY M228 ASSEMBLY
17138868

Part numbers listed are only parts used in this model

Item	Part No.	Description	Qty	Un	From SN	To SN	Order PN	Page
38	17139585	PLUG D35	1	UN			17139585	
39	17139593	PLUG D51	1	UN			17139593	
41	17139627	CANOPY DOOR M228	2	UN			17139627	
42	17139635	CONTROL PANEL DOOR M228	1	UN			17139635	
43	17139650	CANOPY DOOR M228	1	UN			17139650	

CENTRAL LIFTING ARCH ASSEMBLY

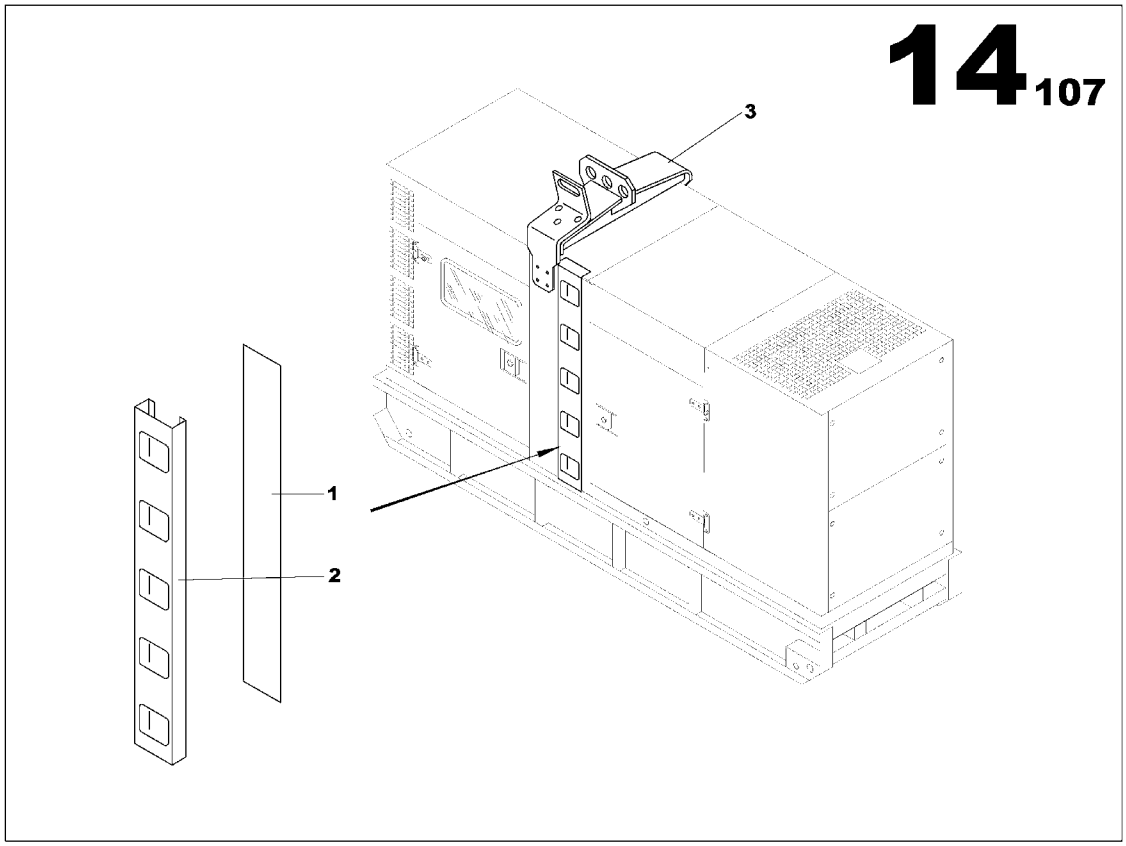

CENTRAL LIFTING ARCH ASSEMBLY
17139486

Part numbers listed are only parts used in this model

Item	Part No.	Description	Qty	Un	From SN	To SN	Order PN	Page
1	17138785	LADDER M227	1	UN			17138785	
2	17138793	LADDER PROTECTION PANEL M228/229	1	UN			17138793	
3	17139494	LIFTING FRAME ASSEMBLY	1	UN			17139494	119

LIFTING FRAME ASSEMBLY

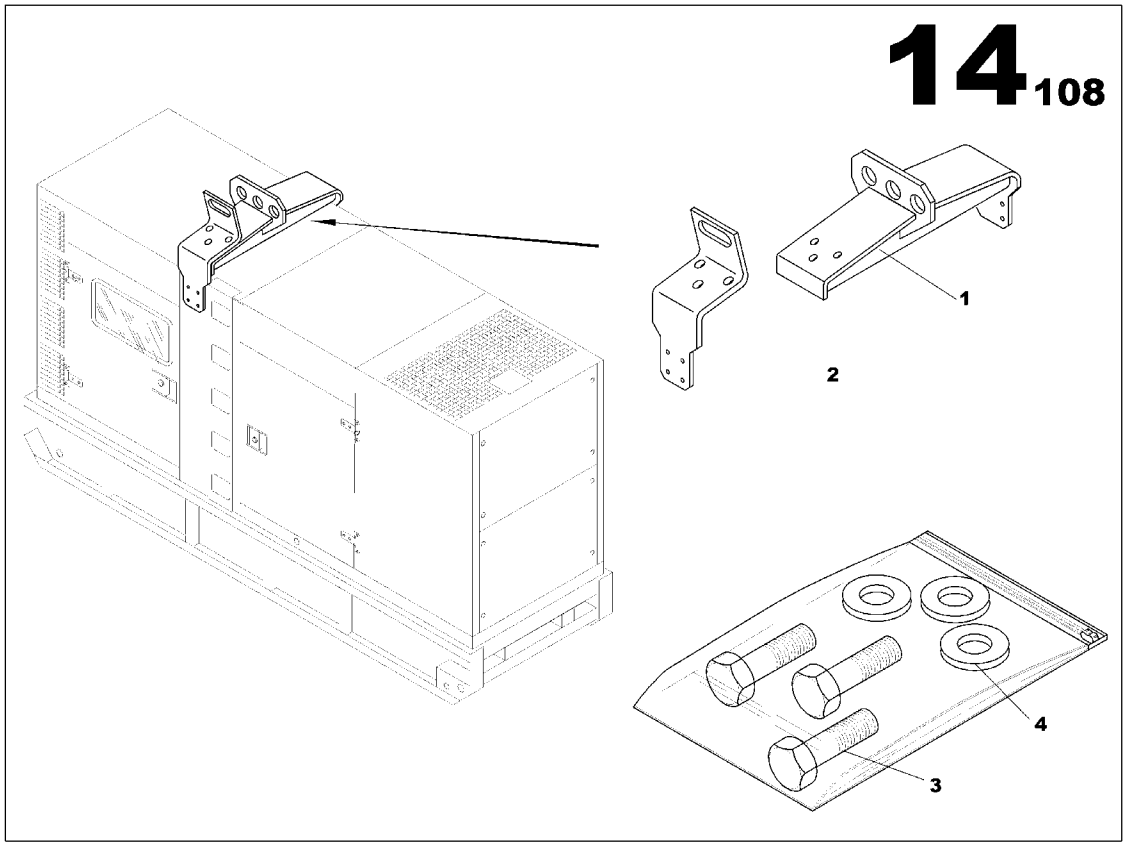

LIFTING FRAME ASSEMBLY
17139494

Part numbers listed are only parts used in this model

Item	Part No.	Description	Qty	Un	From SN	To SN	Order PN	Page
1	17139460	LIFTING FRAME 4500daN M228 CANOPY	1	UN			17139460	
2	17139528	LIFTING BRACKET M228	1	UN			17139528	
3	85632198	SCREW H M20x50	3	UN			85632198	
4	85632222	WASHER 20x40	3	UN			85632222	

EARTH ROD WITH CABLE CANOPY ASSEMBLY

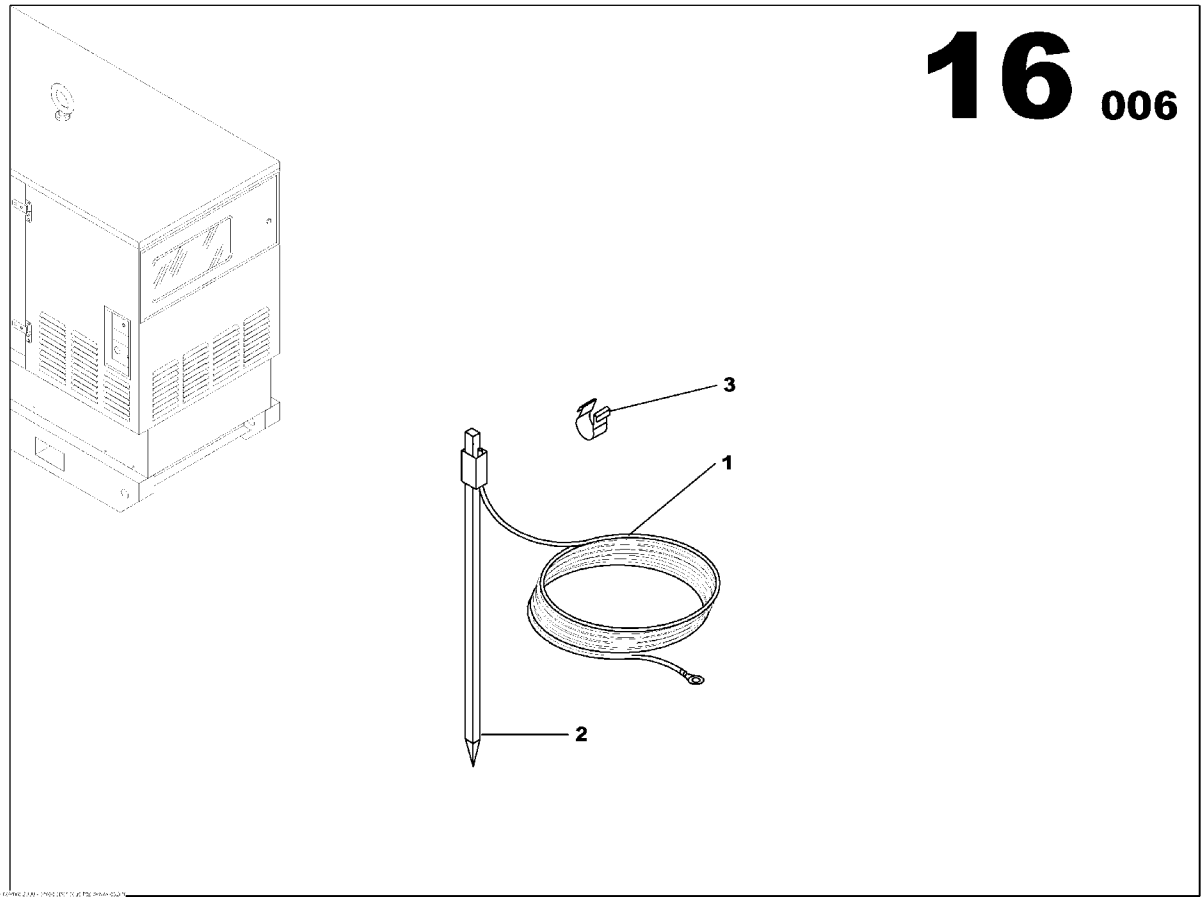

EARTH ROD WITH CABLE CANOPY ASSEMBLY
85407906

Part numbers listed are only parts used in this model

Item	Part No.	Description	Qty	Un	From SN	To SN	Order PN	Page
1	85408227	NEUTRAL/EARTH SYSTEM CABLE 25mm2 L10000 Gr/Ye	1	UN			85408227	
2	85408334	EARTH ROD L1000	1	UN			85408334	
3	85409191	CLIP-ON BRACKET	2	UN			85409191	

ELECTRICAL FUNCTION

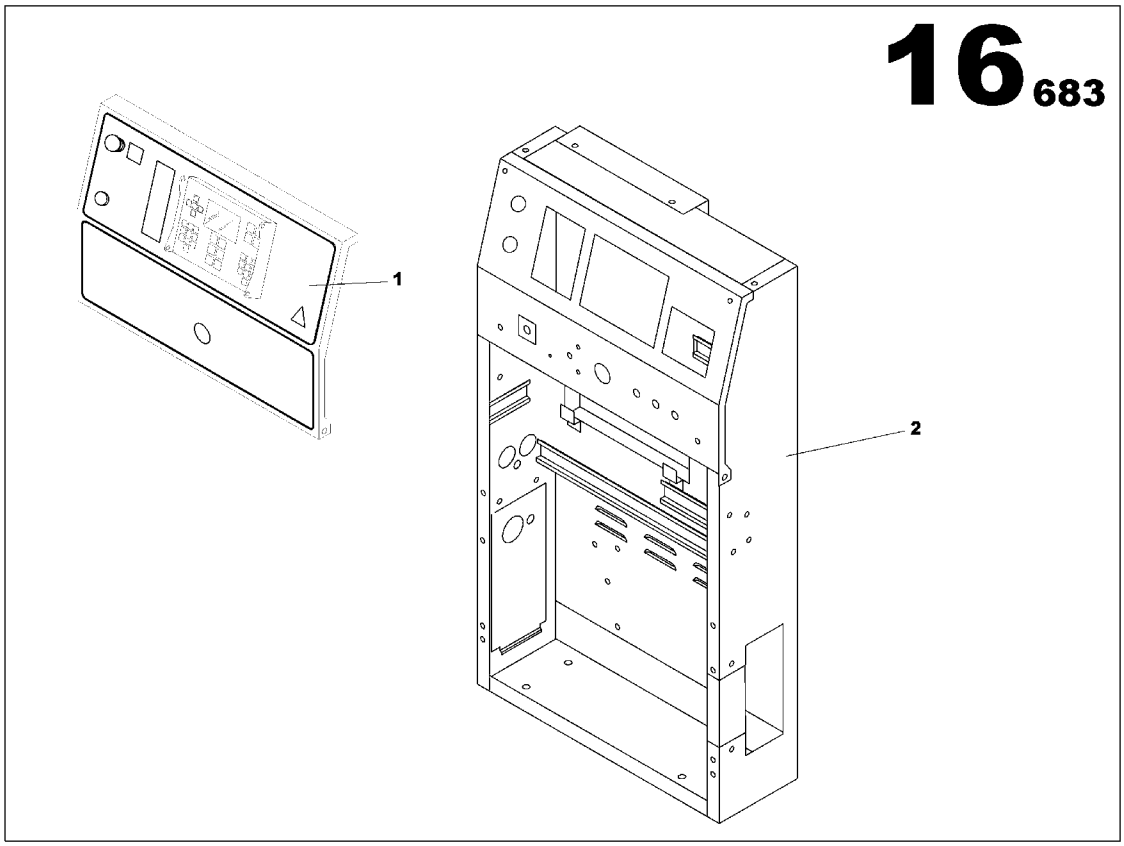

ELECTRICAL FUNCTION

Part numbers listed are only parts used in this model

Item	Part No.	Description	Qty	Un	From SN	To SN	Order PN	Page
1	17132424	PROTECTION PANEL OPTION	1	UN			17132424	125
2	17140195	AIPR ASSEMBLY	1	UN			17140195	127
3	85639599	DECALS TERMINAL BLOCK ASSEMBLY	1	UN			85639599	131
4		CONTROL PANEL FONCTION	1	UN				133
5		ELECTRIC SUPPLY FUNCTION	1	UN				173

PROTECTION PANEL OPTION

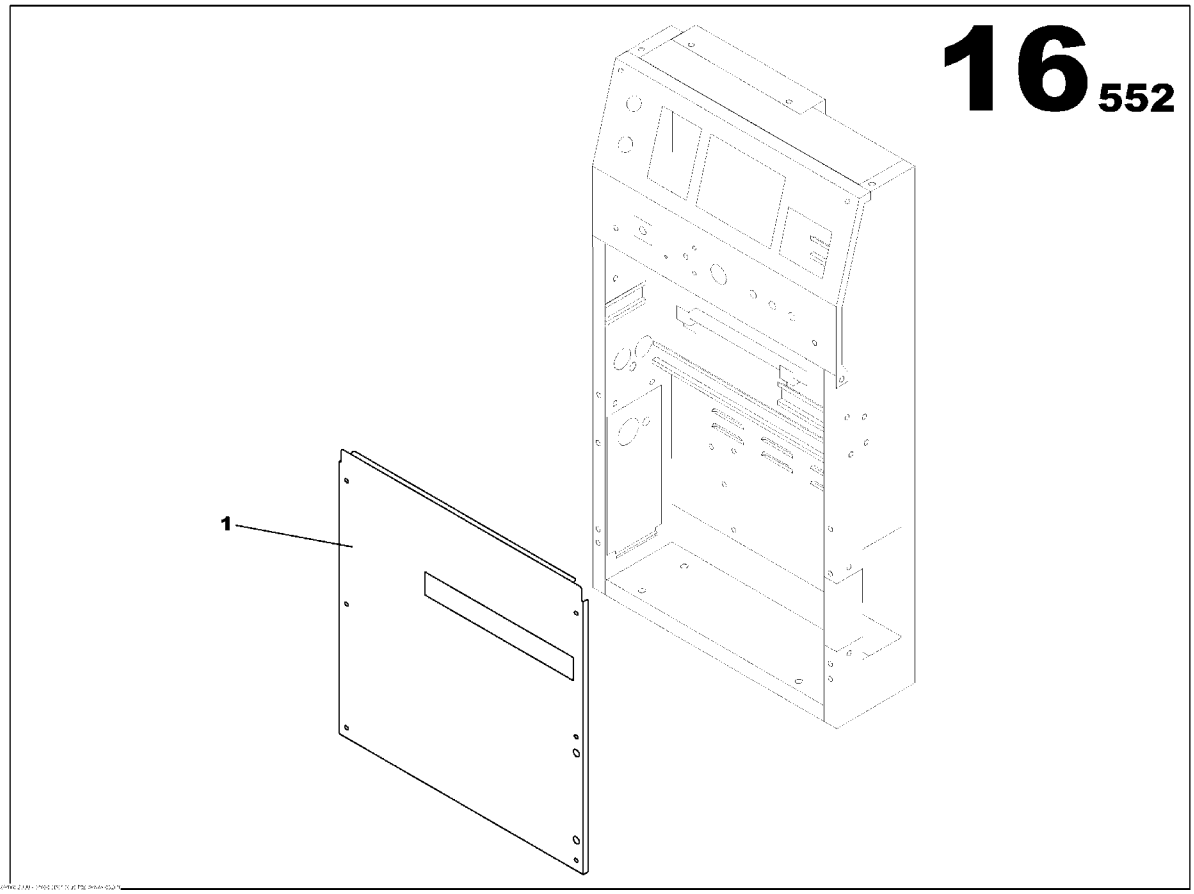

PROTECTION PANEL OPTION
17132424

Part numbers listed are only parts used in this model

Item	Part No.	Description	Qty	Un	From SN	To SN	Order PN	Page
1	17132200	S4500 CLOSURE PANEL	1	UN			17132200	

AIPR ASSEMBLY

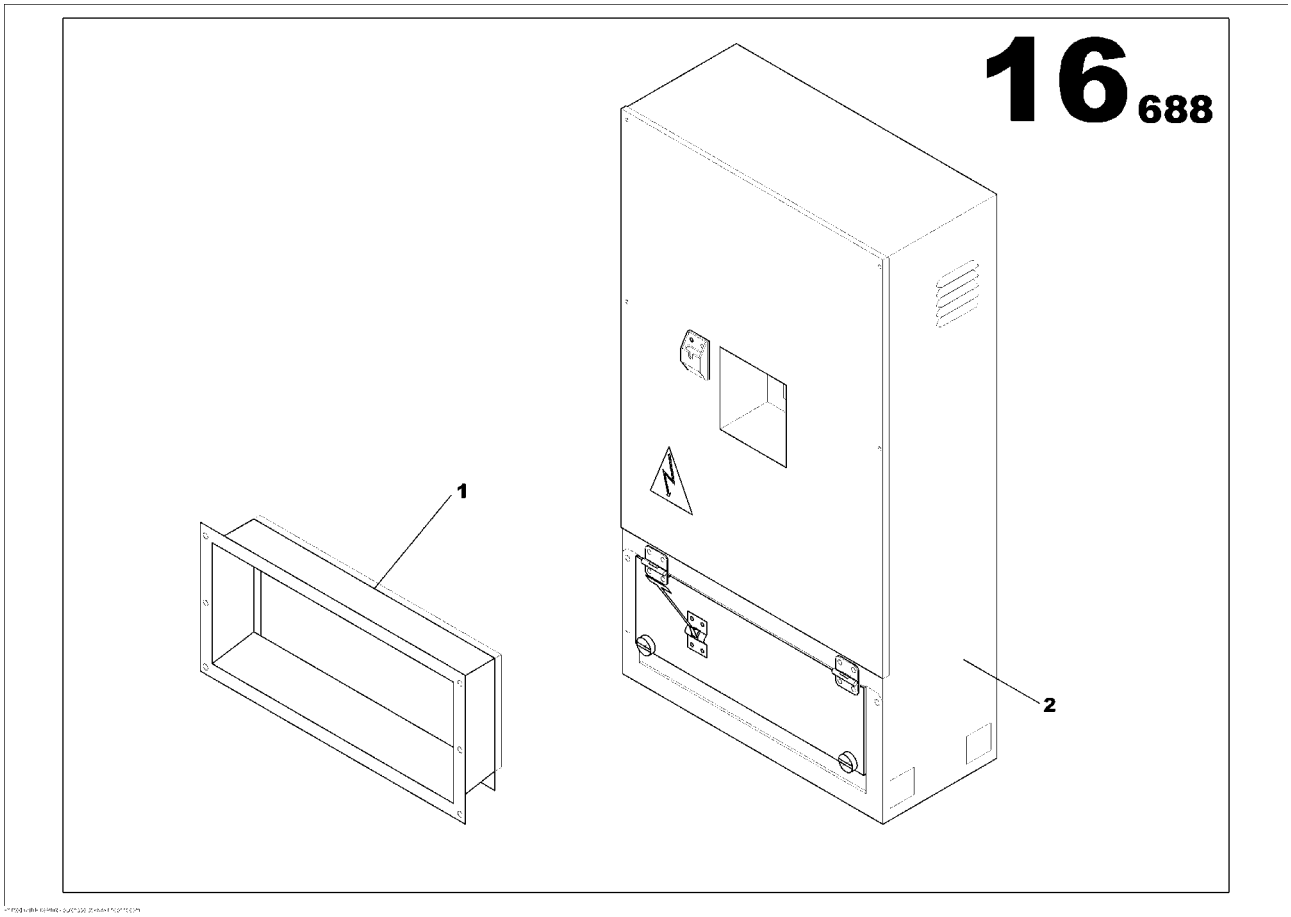

AIPR ASSEMBLY
17140195

Part numbers listed are only parts used in this model

Item	Part No.	Description	Qty	Un	From SN	To SN	Order PN	Page
1	17138850	AIPR ACCES PANEL	1	UN			17138850	
2	17140187	AIPR ASSEMBLY	1	UN			17140187	129

AIPR ASSEMBLY

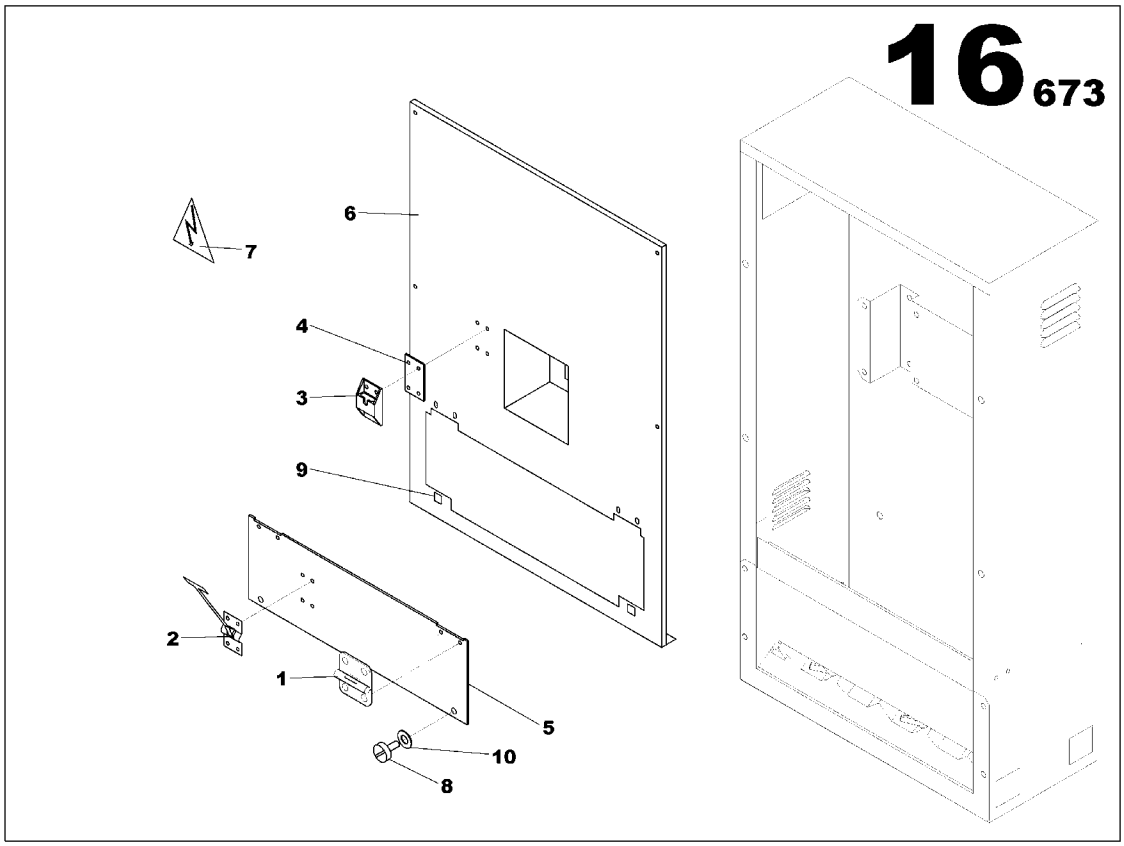

AIPR ASSEMBLY
17140187

Part numbers listed are only parts used in this model

Item	Part No.	Description	Qty	Un	From SN	To SN	Order PN	Page
1	85406130	DOOR HINGE	2	UN			85406130	
2	17139544	INOXIDABLE HOOK 90mm	1	UN			17139544	
3	17139551	DOOR STOP	1	UN			17139551	
4	17139569	BASE PLATE PAD FOR PLATE	1	UN			17139569	
5	17139981	DOOR PLEXI AIPR	1	UN			17139981	
6	17140179	AIPR PANEL	1	UN			17140179	
7	85409175	STICKER ELECTRIC DANGER SYMBOL	1	UN			85409175	
8	85409225	1/4 TURN SCREW D9 *-Order 31801021601NE*	2	UN			85409225	
9	85409233	CAPTIVE NUT FOR 1/4 TURN BOLT *-Order 31801021601NE*	2	UN			85409233	
10	85409241	WASHER FOR 1/4 TURN FASTENER *-Order 31801021601NE*	2	UN			85409241	

DECALS TERMINAL BLOCK ASSEMBLY

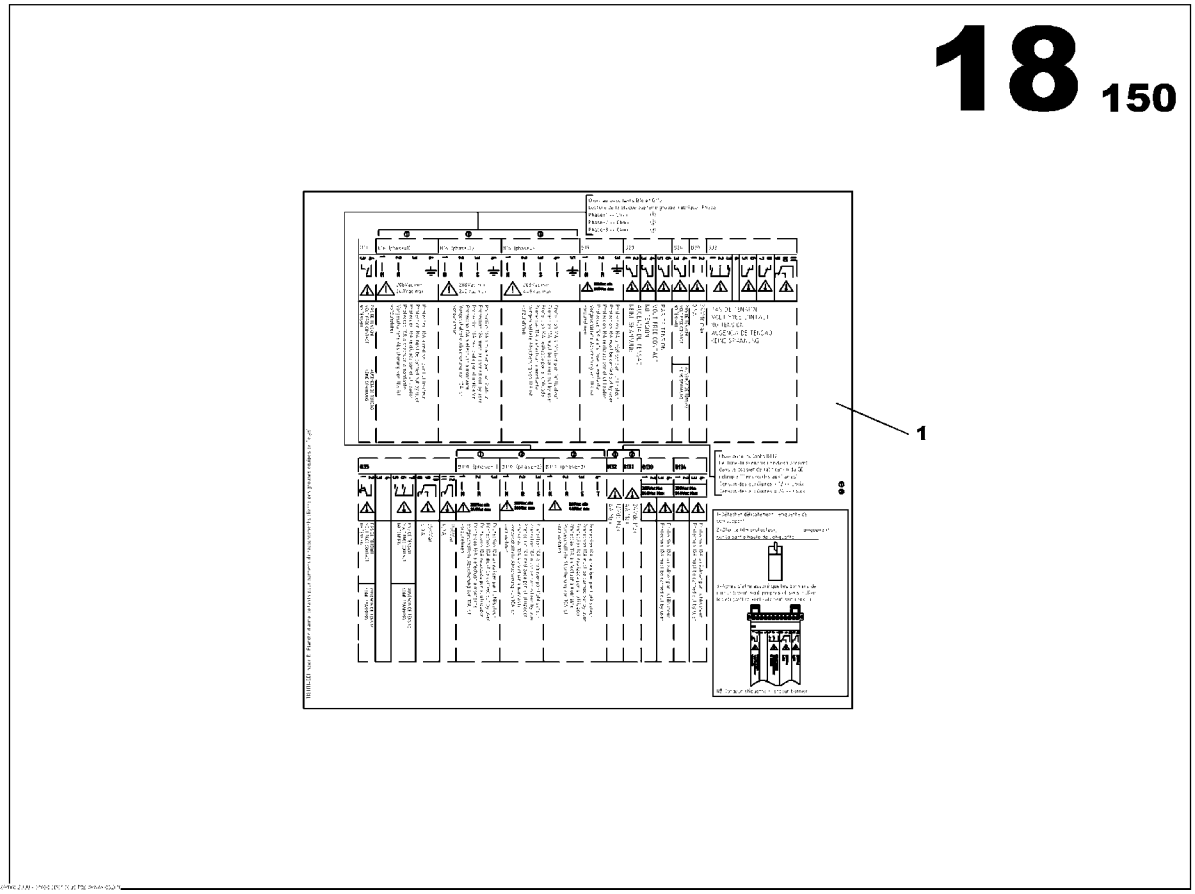

DECALS TERMINAL BLOCK ASSEMBLY
85639599

Part numbers listed are only parts used in this model

Item	Part No.	Description	Qty	Un	From SN	To SN	Order PN	Page
1	85639573	STICKER TERMINAL BLOCK	1	UN	03012825		85639573	

CONTROL PANEL FUNCTION

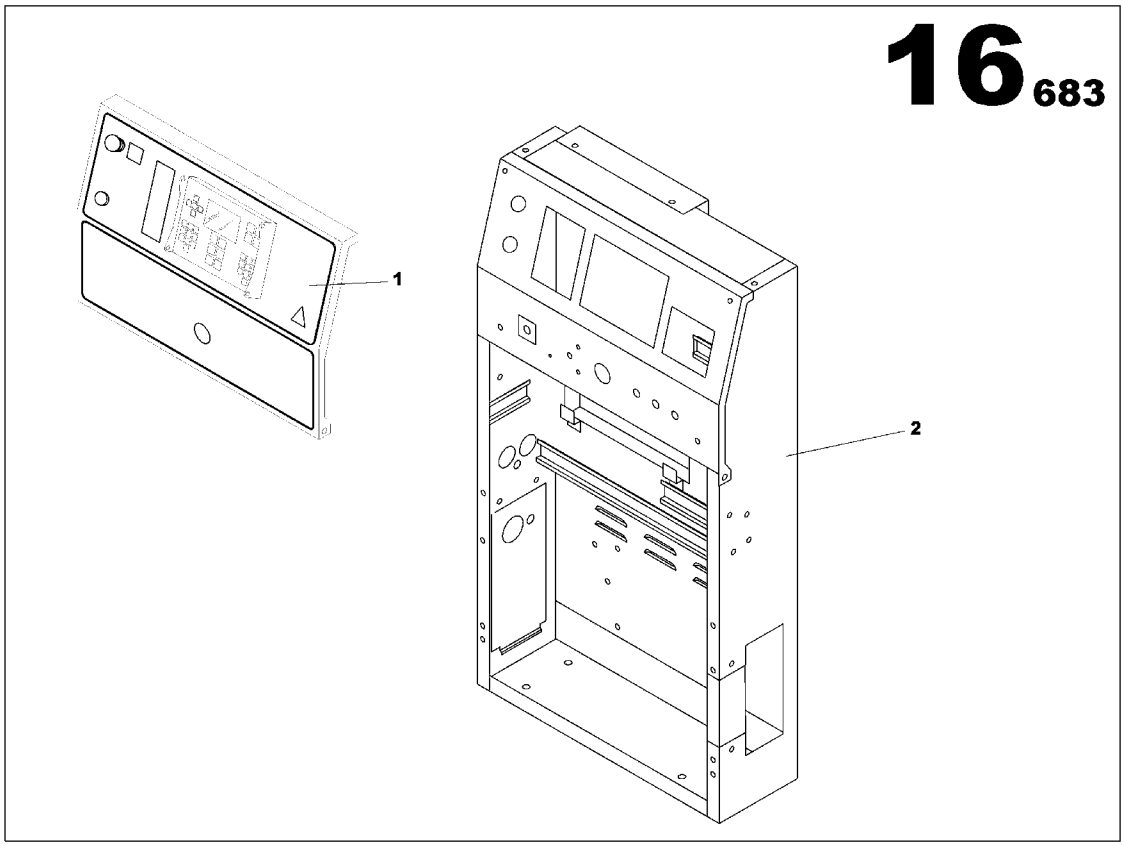

CONTROL PANEL FUNCTION

Part numbers listed are only parts used in this model

Item	Part No.	Description	Qty	Un	From SN	To SN	Order PN	Page
1	17139916	SPEED POTENTIOMETER OPTION	1	UN			17139916	135
2	85411569	INTELLISYS OPTION CB CARD	1	UN			85411569	137
3	17133174	ELECTRIC PACK OPTION	1	UN			17133174	143
4	17140740	EARTH LEAKAGE OPTION	1	UN			17140740	
5	17140757	INTELLISYS OPTION LOW FUEL LEVEL	1	UN			17140757	
6	17140773	INTERFACE D12 INTELLISYS OPTION S4500	1	UN			17140773	147
7	17140781	S4500 DASHBOARD OPTION	1	UN			17140781	151
8		WIRING LOOM FUNCTION	1	UN				167

SPEED POTENTIOMETER OPTION

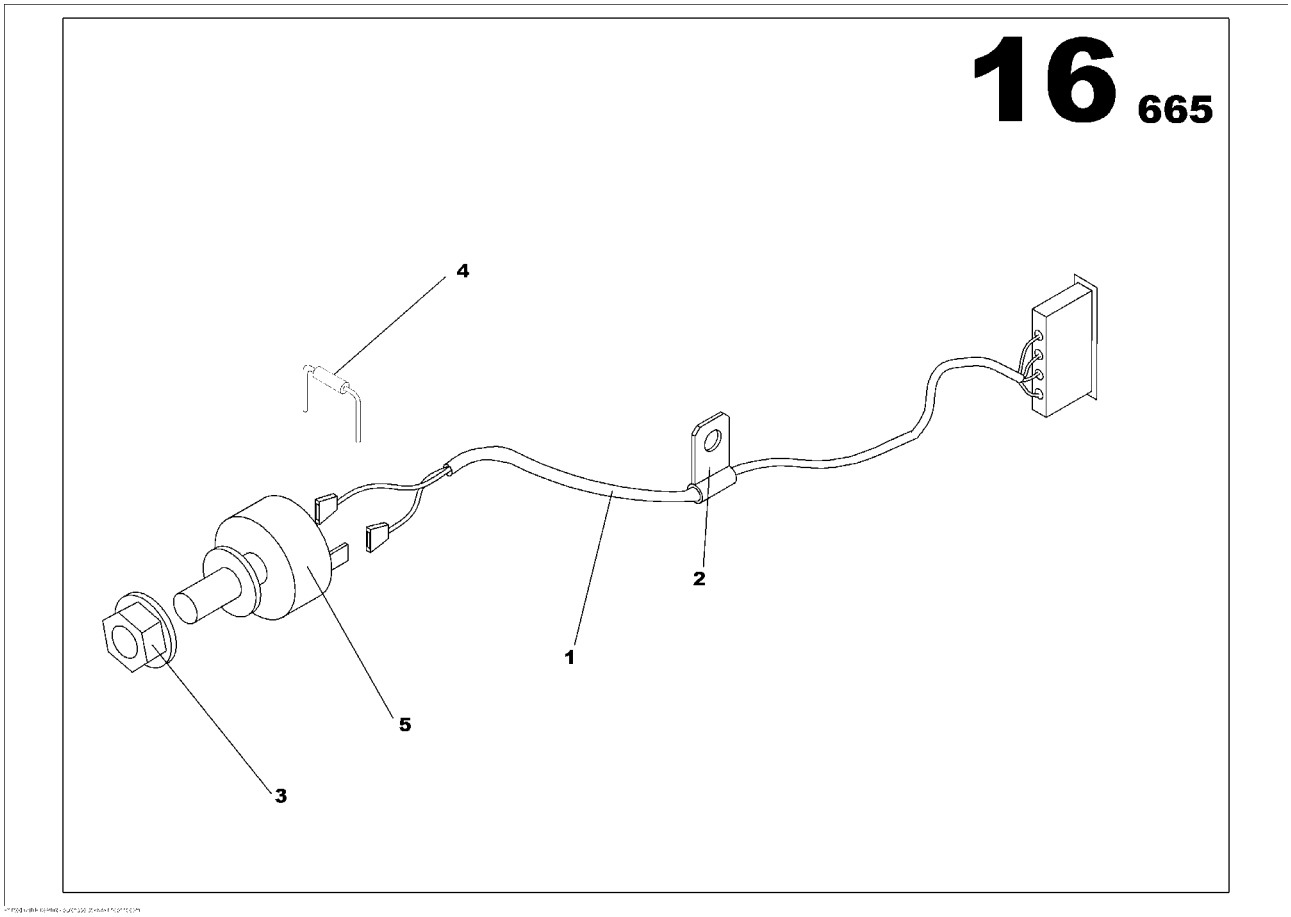

SPEED POTENTIOMETER OPTION
17139916

Part numbers listed are only parts used in this model

Item	Part No.	Description	Qty	Un	From SN	To SN	Order PN	Page
1	85503993	WIRING LOOM C105 L540	1	UN			85503993	
2	85504207	CLAMP D4.7	1	UN			85504207	
3	85504215	LOCK AXE SYSTEM	1	UN			85504215	
4	17141375	RESISTOR 1k Ohms	1	UN			17141375	
5	85504223	POTENTIOMETER 4.7kOHMS	1	UN			85504223	

INTELLISYS OPTION CB CARD

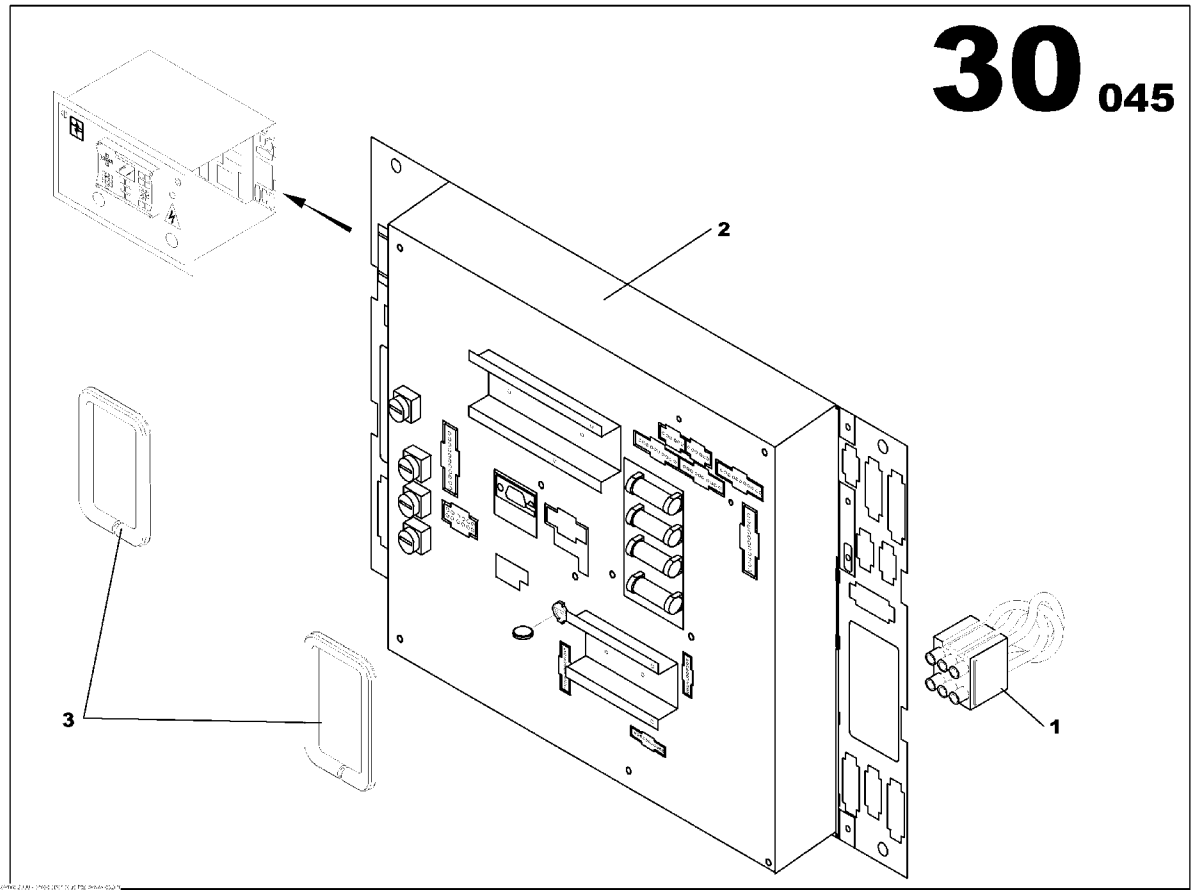

INTELLISYS OPTION CB CARD
85411569

Part numbers listed are only parts used in this model

Item	Part No.	Description	Qty	Un	From SN	To SN	Order PN	Page
1	85504033	WIRING LOOM C35S	1	UN			85504033	
2	85627198	INTELLISYS CARD CB12 *-1,06F*	1	UN	02010540	04000933	85636991	139
2	85636991	INTELLISYS CARD CB12 *-1.10G*	1	UN	04000934		85636991	141
3	85630515	LINEAR SEAL	0.2	ML			85630515	

INTELLISYS CARD CB12

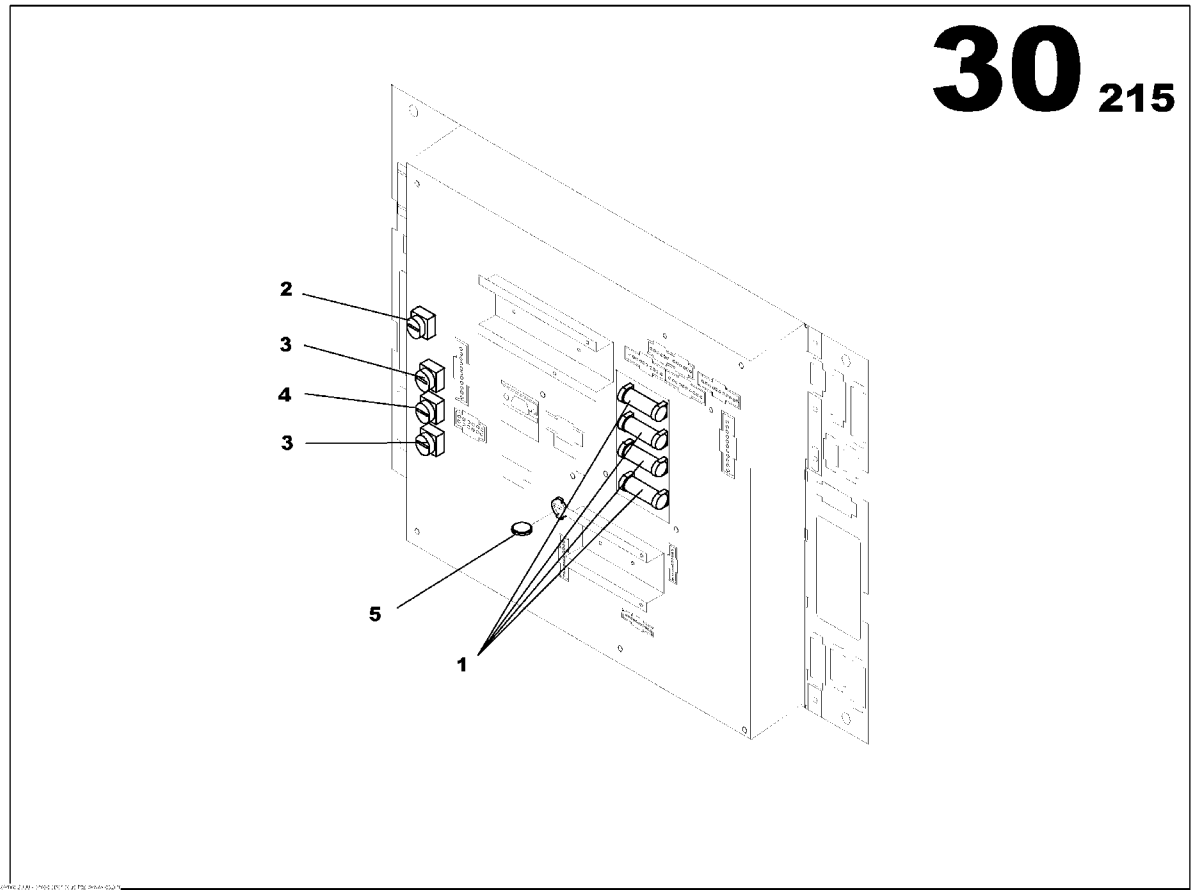

INTELLISYS CARD CB12
85627198

Part numbers listed are only parts used in this model

Item	Part No.	Description	Qty	Un	From SN	To SN	Order PN	Page
1	85426112	FUSE CYLINDRICAL 12.5A	4	UN			85426112	
2	85426120	FUSE CYLINDRICAL 10A	1	UN			85426120	
3	85426138	FUSE CYLINDRICAL 1A	2	UN			85426138	
4	85426146	FUSE CYLINDRICAL 2,5A	1	UN			85426146	
5	85505154	CR2032 CELL	1	UN			85505154	

INTELLISYS CARD CB12

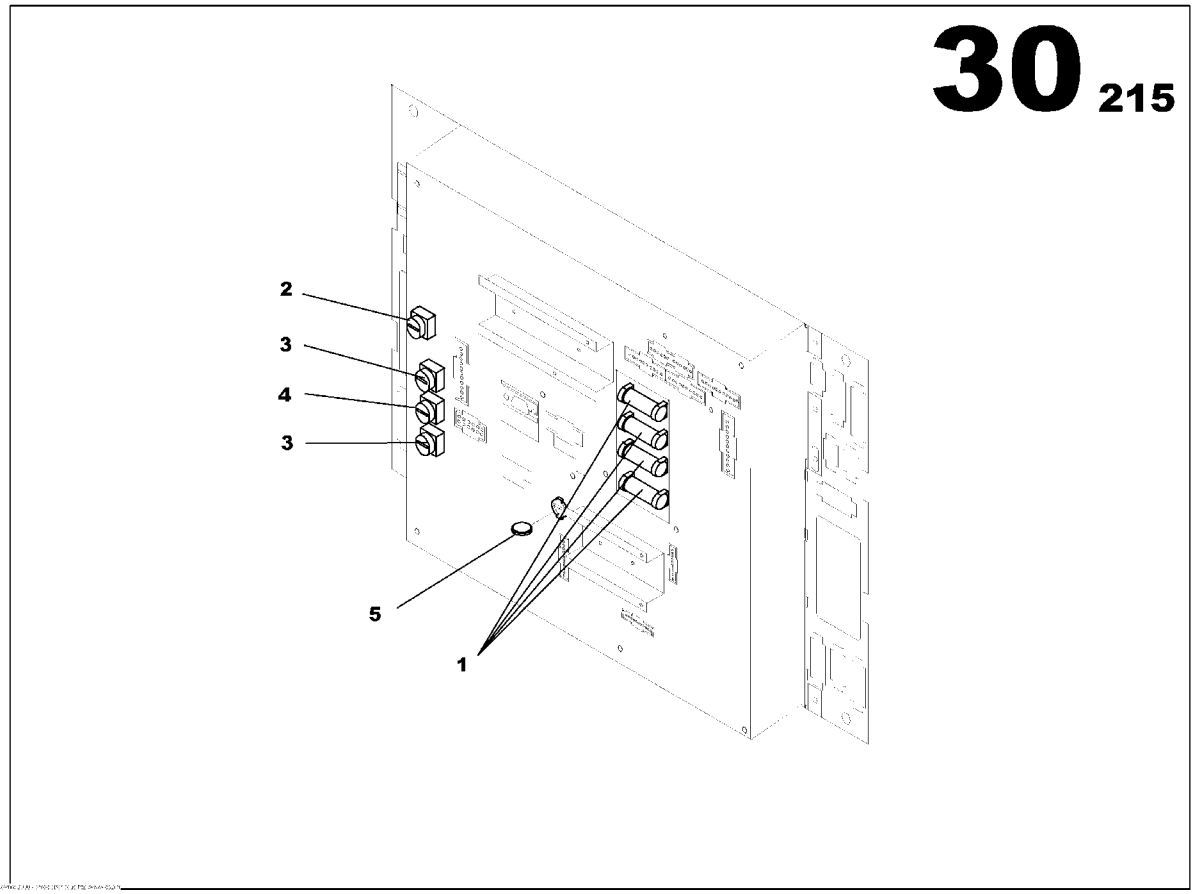

INTELLISYS CARD CB12

85636991

Part numbers listed are only parts used in this model

Item	Part No.	Description	Qty	Un	From SN	To SN	Order PN	Page
1	85426112	FUSE CYLINDRICAL 12.5A	4	UN			85426112	
2	85426120	FUSE CYLINDRICAL 10A	1	UN			85426120	
3	85426138	FUSE CYLINDRICAL 1A	2	UN			85426138	
4	85426146	FUSE CYLINDRICAL 2,5A	1	UN			85426146	
5	85505154	CR2032 CELL	1	UN			85505154	

ELECTRIC PACK OPTION

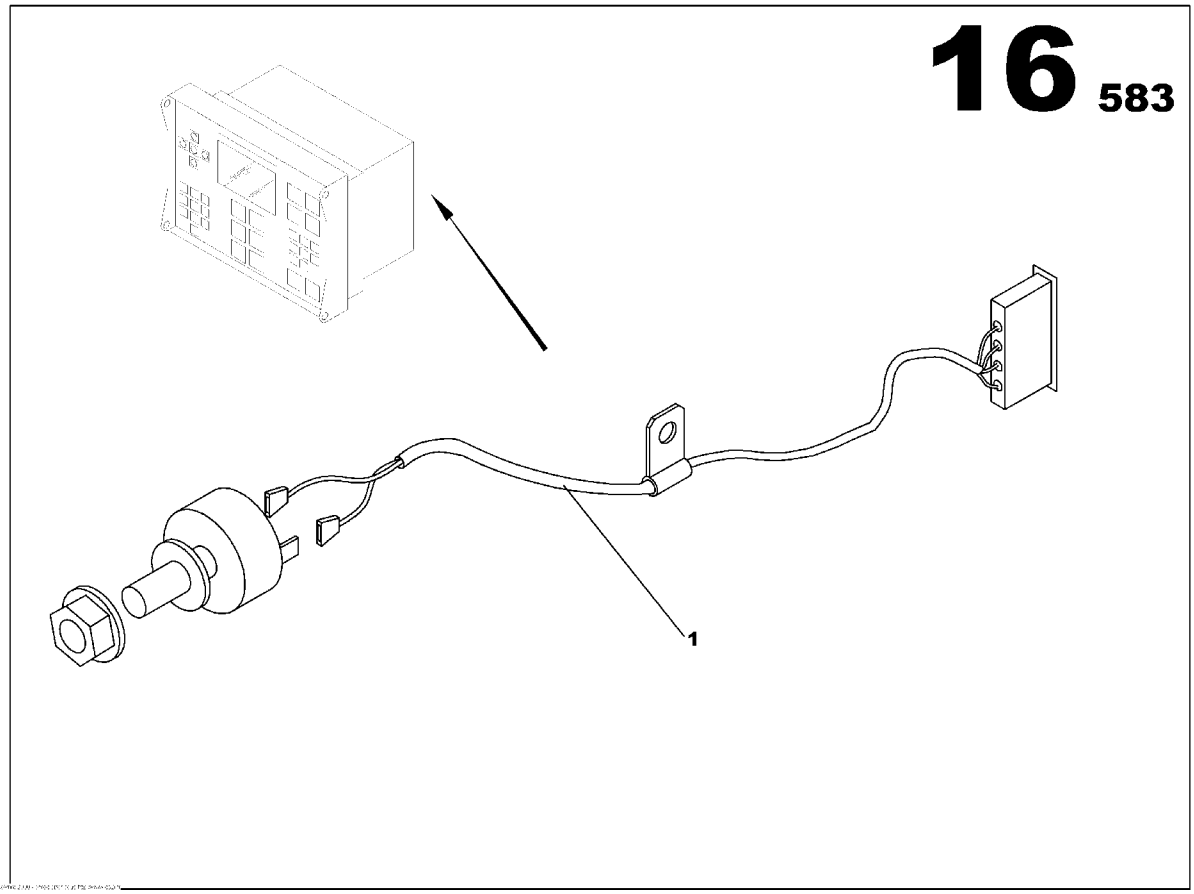

ELECTRIC PACK OPTION
17133174

Part numbers listed are only parts used in this model

Item	Part No.	Description	Qty	Un	From SN	To SN	Order PN	Page
1	85636140	VOLTAGE POTENTIOMETER OPTION	1	UN			85636140	145

VOLTAGE POTENTIOMETER OPTION

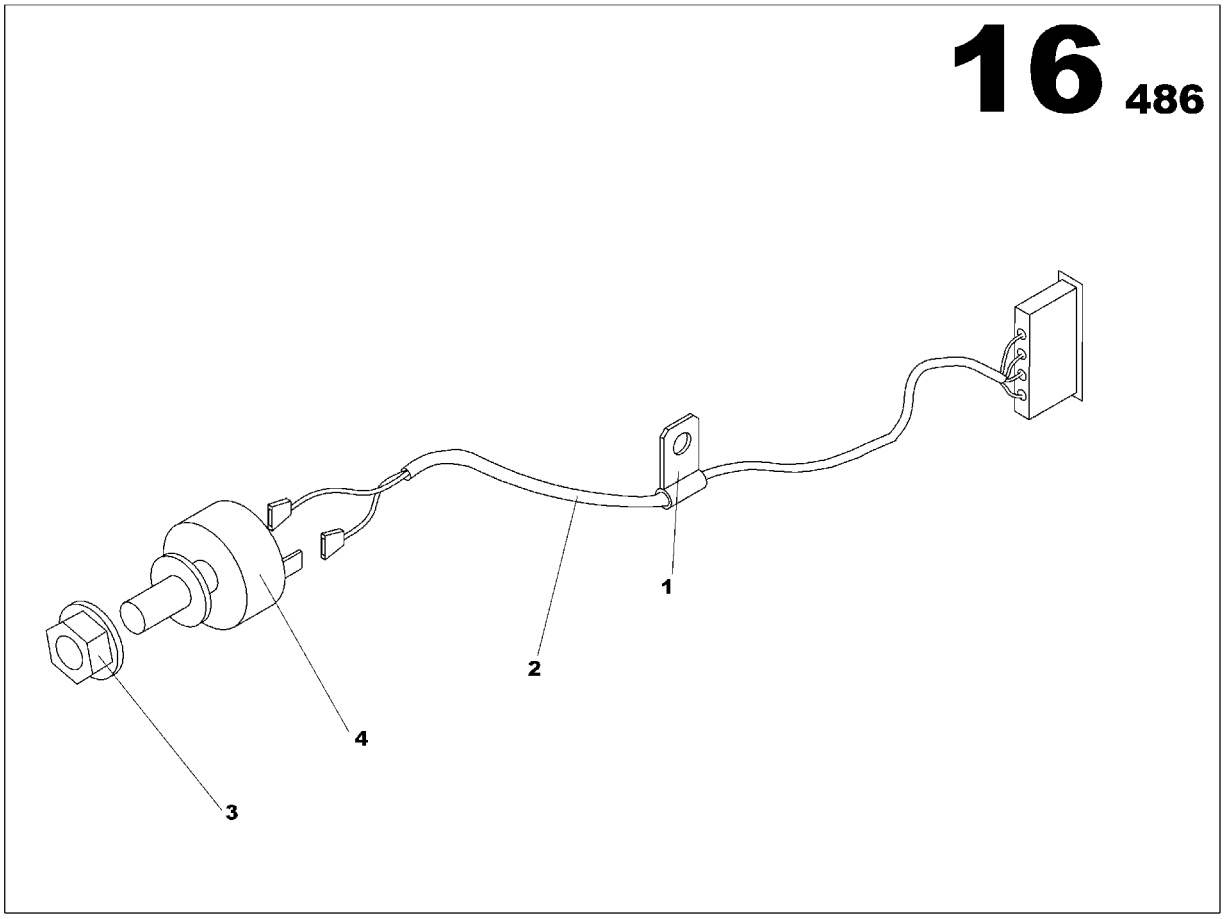

VOLTAGE POTENTIOMETER OPTION
85636140

Part numbers listed are only parts used in this model

Item	Part No.	Description	Qty	Un	From SN	To SN	Order PN	Page
1	85504207	CLAMP D4.7	1	UN			85504207	
2	85636959	INTELLISYS WIRING LOOM 031	1	UN			85636959	
3	85504215	LOCK AXE SYSTEM	1	UN			85504215	
4	85504264	POTENTIOMETER 1kOHMS	1	UN			85504264	

INTERFACE D12 INTELLISYS OPTION S4500

INTERFACE D12 INTELLISYS OPTION S4500
17140773

Part numbers listed are only parts used in this model

Item	Part No.	Description	Qty	Un	From SN	To SN	Order PN	Page
1	85632115	PUSH BUTTON D22	1	UN			85632115	149
2	85632123	LIGHTING PUSH BUTTON D22	1	UN			85632123	
3	85638724	WIRING LOOM W	1	UN			85638724	
4	85427102	345 INTELLISYS MODULE	1	UN			85427102	
5	85408912	AUTOMOBILE RELAY BASE	1	UN			85408912	
6	85423366	RELAY 24V 10/20A	1	UN			85423366	
7	85632081	INTREFACE	3	UN			85632081	

PUSH BUTTON D22

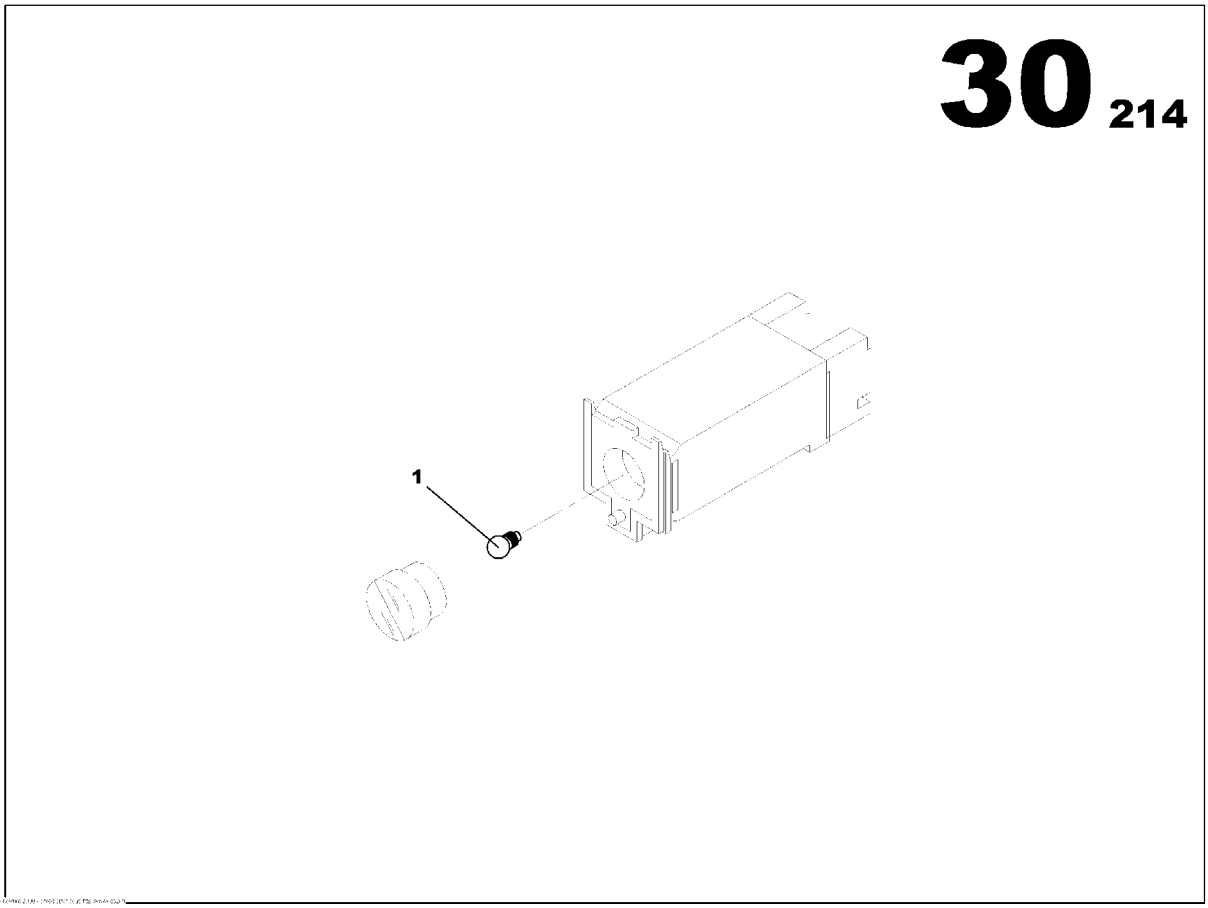

PUSH BUTTON D22
85632115

Part numbers listed are only parts used in this model

Item	Part No.	Description	Qty	Un	From SN	To SN	Order PN	Page
1	85632172	LAMP 06V BA9S TYPE	1	UN			85632172	

S4500 DASHBOARD OPTION

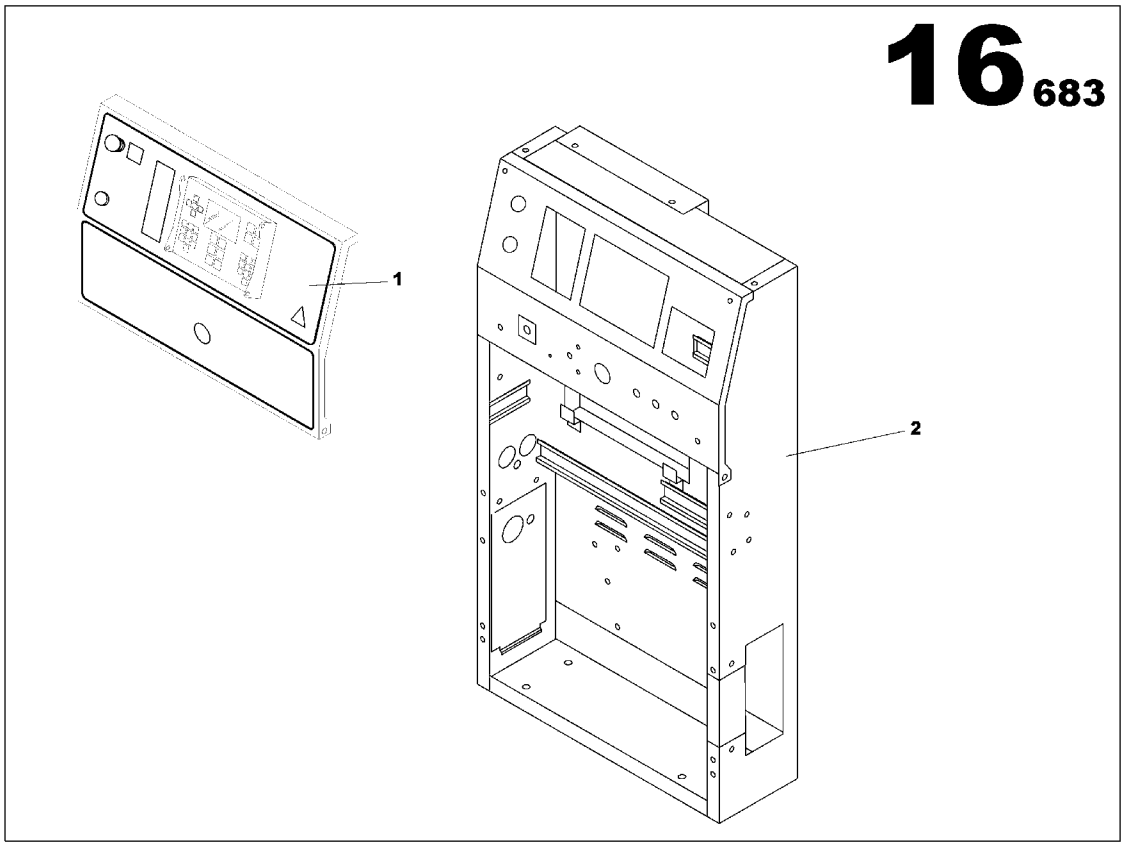

S4500 DASHBOARD OPTION
17140781

Part numbers listed are only parts used in this model

Item	Part No.	Description	Qty	Un	From SN	To SN	Order PN	Page
1	85639565	PLASTIQUE PLATE L548xh310	1	UN			85639565	
2	85638336	CONTROL PANEL SHEET METAL ASSEMBLY	1	UN			85638336	153
3	17140765	CONTROL PANEL ASSEMBLY	1	UN			17140765	155

CONTROL PANEL SHEET METAL ASSEMBLY

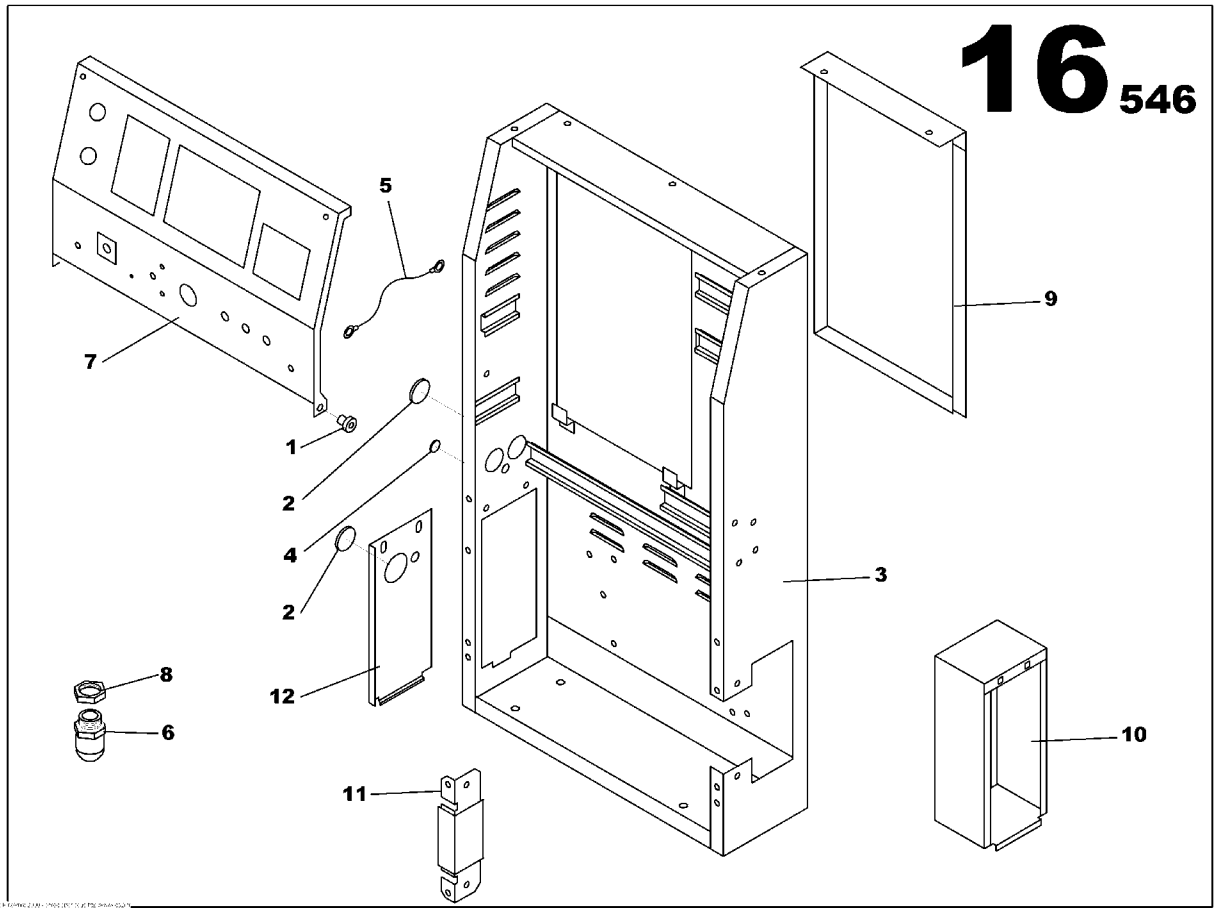

CONTROL PANEL SHEET METAL ASSEMBLY
85638336

Part numbers listed are only parts used in this model

Item	Part No.	Description	Qty	Un	From SN	To SN	Order PN	Page
1	85636660	SLEAVE BEARING	2	UN			85636660	
2	85408391	RUBBER GROMMET D47	3	UN			85408391	
3	85638294	CONTROL PANEL S4500 HOUSING	1	UN			85638294	
4	85636694	RUBBER GROMMET D15	1	UN			85636694	
5	85634582	COVER STOP CONTROL PANEL S3500	2	UN			85634582	
6	85635894	GLAND NUT PG13	1	UN			85635894	
7	85638310	CONTROL PANEL BRACKET	1	UN			85638310	
8	85635902	PG13 NUT	1	UN			85635902	
9	85634517	REAR CLOSURE PANEL S3500 CONTROL PANEL	1	UN			85634517	
10	85638492	SPACER	1	UN			85638492	
11	85638328	SUPPORT PANEL S4500 CONTROL PANEL	1	UN			85638328	
12	85638476	CABLE OUTLET PLATE	1	UN			85638476	

CONTROL PANEL ASSEMBLY

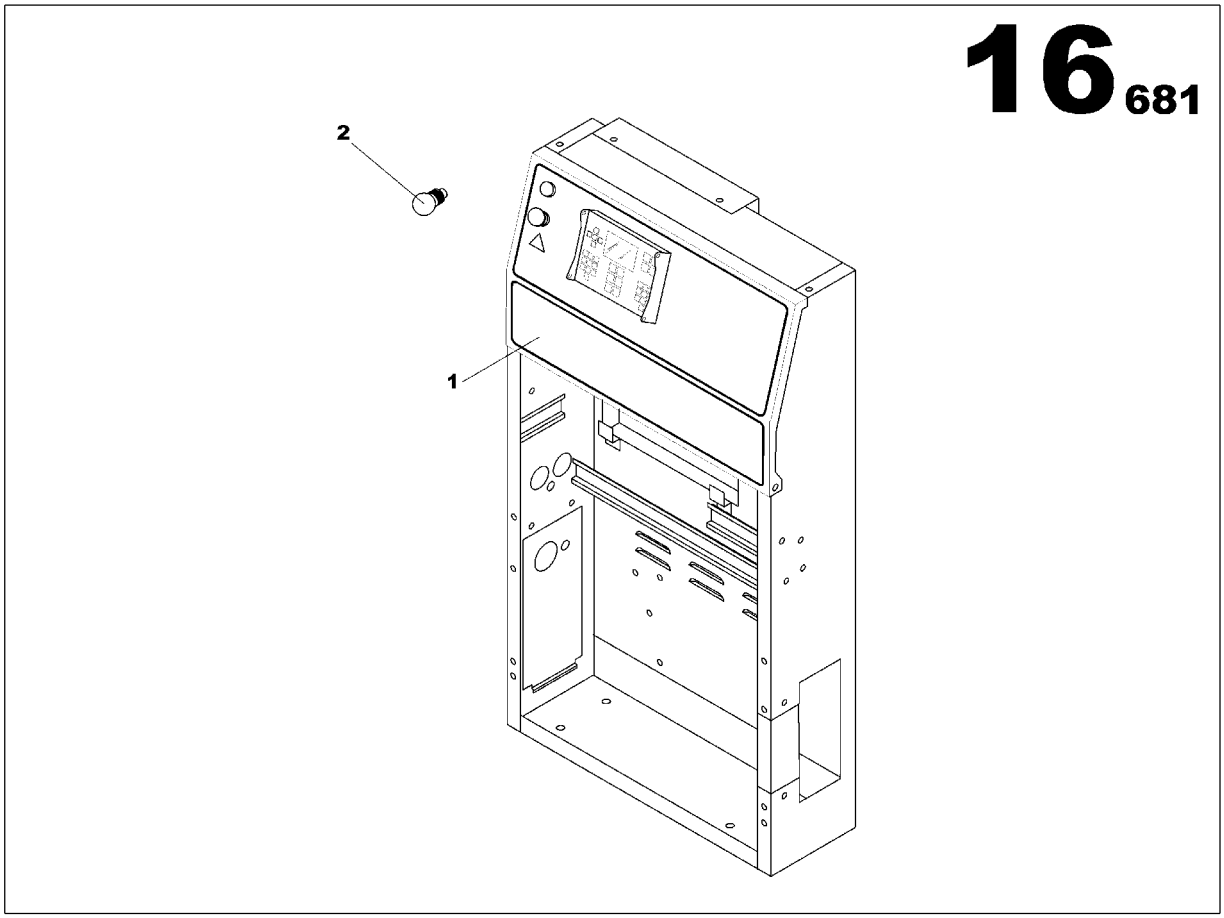

CONTROL PANEL ASSEMBLY
17140765

Part numbers listed are only parts used in this model

Item	Part No.	Description	Qty	Un	From SN	To SN	Order PN	Page
1	85639292	CONTROL PANEL ASSEMBLY	1	UN			85639292	157
2	85504090	LAMP 30V BA9S TYPE	1	UN			85504090	

CONTROL PANEL ASSEMBLY

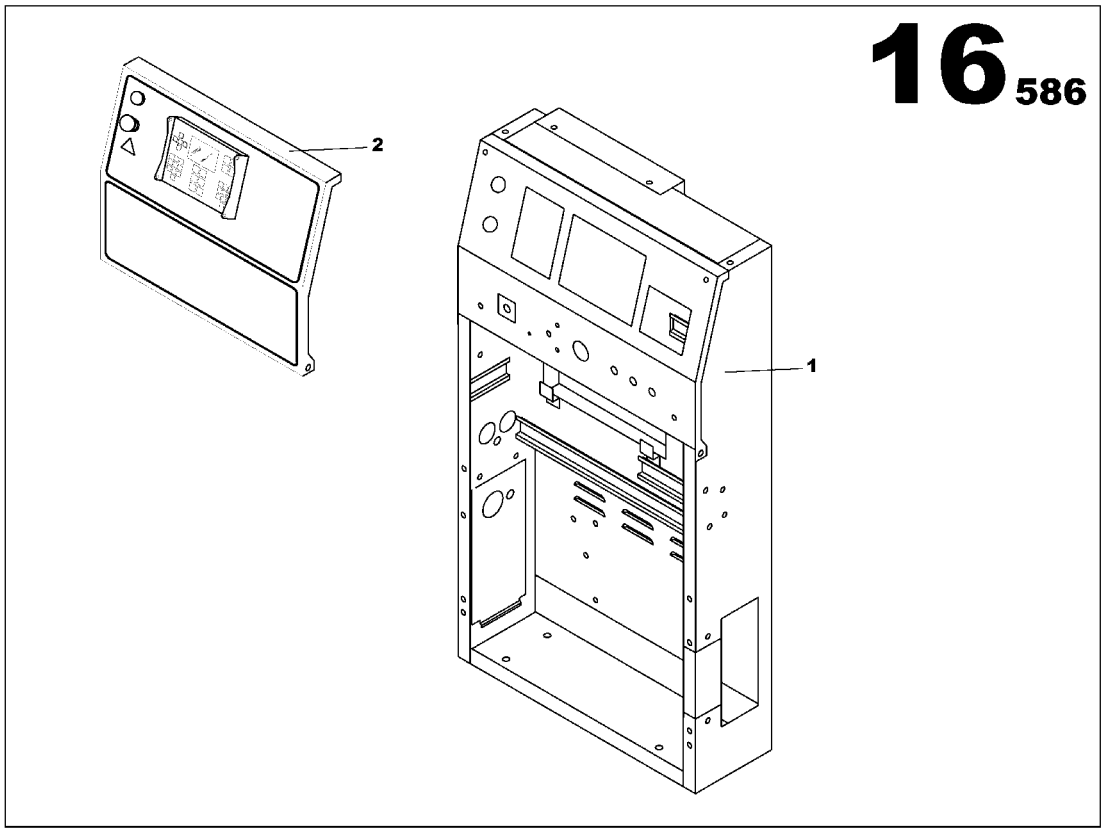

CONTROL PANEL ASSEMBLY
85639292

Part numbers listed are only parts used in this model

Item	Part No.	Description	Qty	Un	From SN	To SN	Order PN	Page
1	17135724	S4500 DASHBOARD OPTION	1	UN			17135724	159
2	85639839	BASIC S4500 FRONT FACE	1	UN			85639839	163

S4500 DASHBOARD OPTION

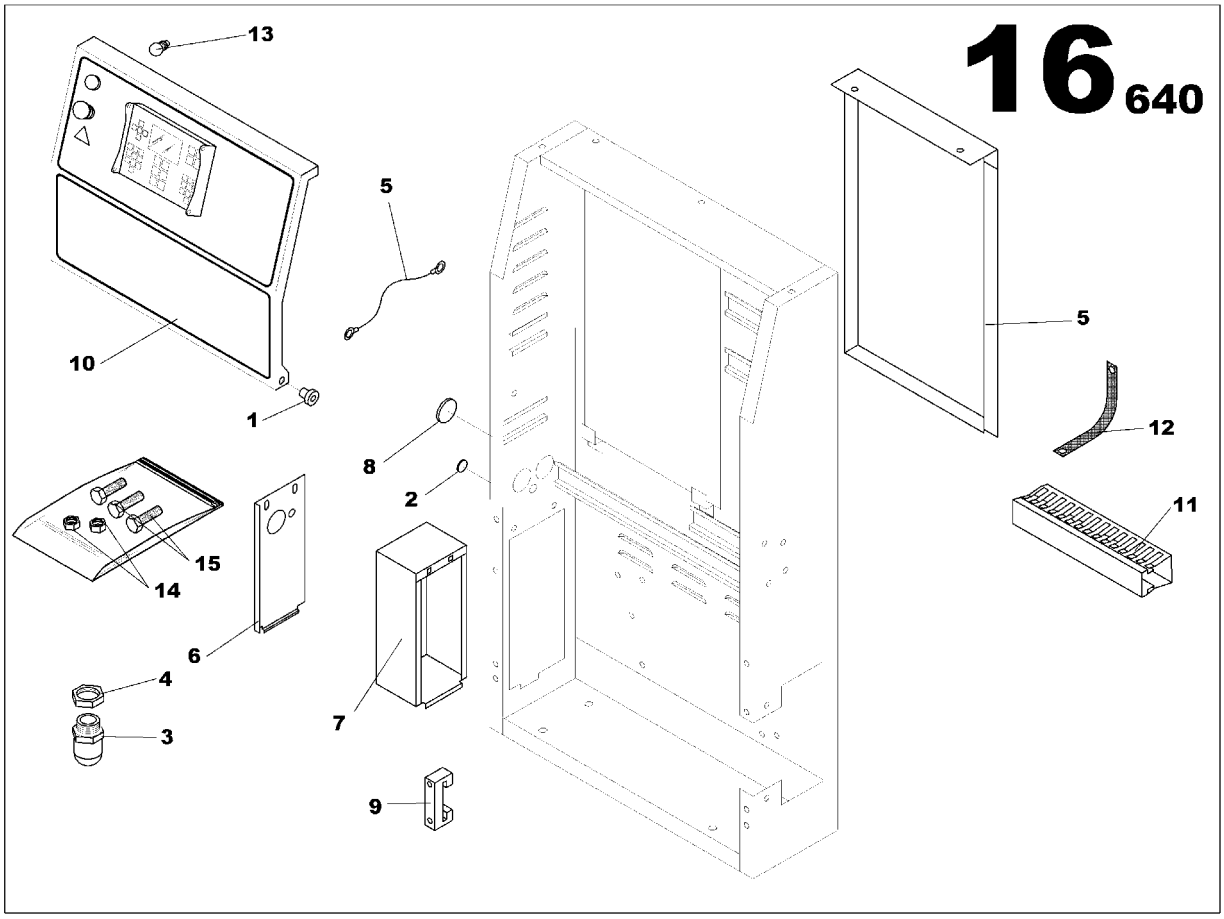

S4500 DASHBOARD OPTION
17135724

Part numbers listed are only parts used in this model

Item	Part No.	Description	Qty	Un	From SN	To SN	Order PN	Page
1	85636660	SLEAVE BEARING	2	UN			85636660	
2	17135476	PLUG	1	UN			17135476	
3	85408615	GLAND NUT PG13	1	UN			85408615	
4	85635902	PG13 NUT	1	UN			85635902	
5	85634517	REAR CLOSURE PANEL S3500 CONTROL PANEL	1	UN			85634517	
6	85638476	CABLE OUTLET PLATE	1	UN			85638476	
7	85638492	SPACER	1	UN			85638492	
8	85408599	RUBBER GROMMET D37	1	UN			85408599	
9	85408854	STOP	1	UN			85408854	
10	85639821	BASIC S4500 FRONT FACE	1	UN			85639821	161
11	17135484	CONNECTING TERMINAL	1	UN			17135484	
12	17135690	GROUND WIRES 16mm2 600mm	1	UN			17135690	
13	85402519	LAMP 12V BA9S TYPE	1	UN			85402519	
14	17130766	NUT M6	2	UN			17130766	
15	85636389	SCREW H M6x16	10	UN			85636389	

BASIC S4500 FRONT FACE

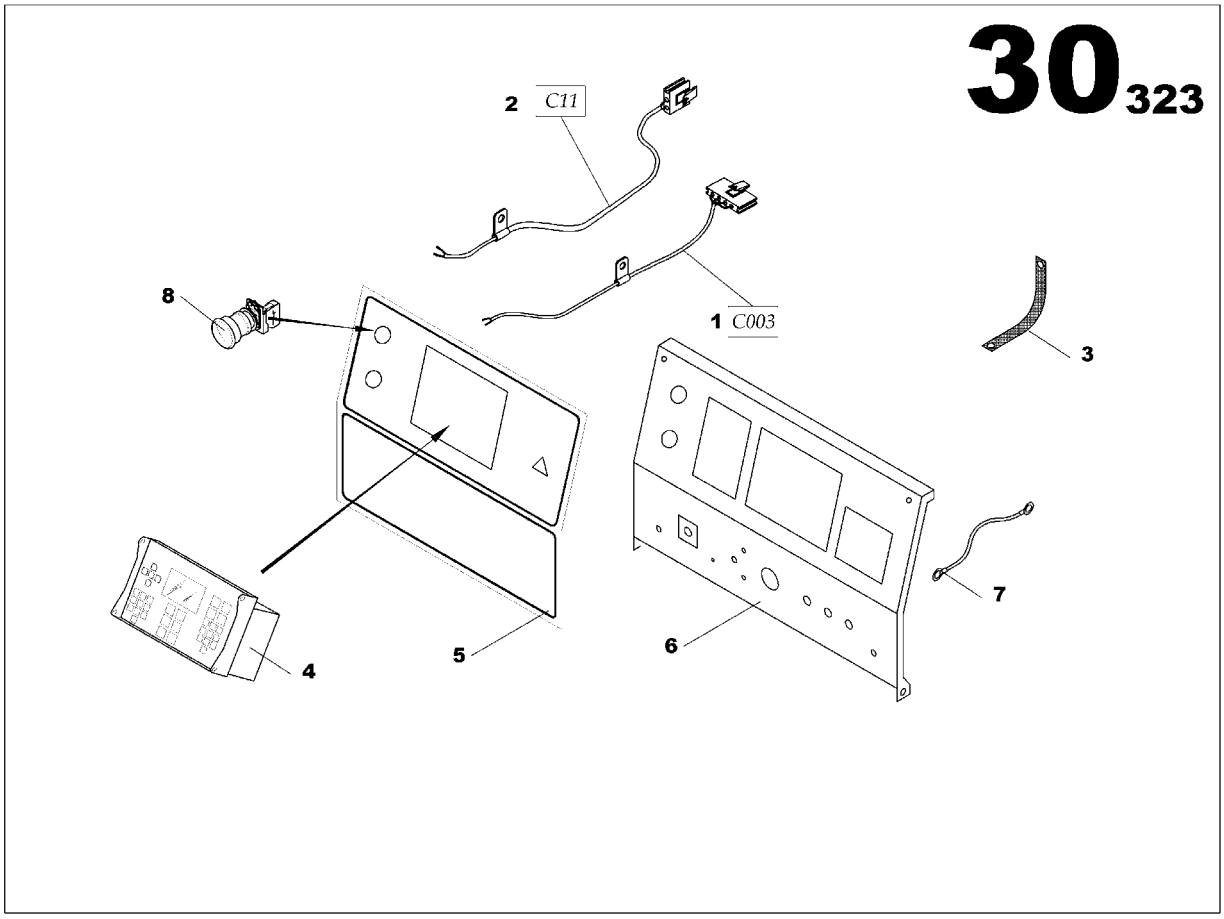

BASIC S4500 FRONT FACE
85639821

Part numbers listed are only parts used in this model

Item	Part No.	Description	Qty	Un	From SN	To SN	Order PN	Page
1	85504017	INTELLISYS WIRING LOOM 003	1	UN			85504017	
2	17135708	WIRING LOOM C11 L660	1	UN			17135708	
3	85504199	GROUND WIRE 10mm2 L :200mm	1	UN			85504199	
4	17135716	INTELLISYS DISPLAY *-SDMO PLATE SOFT 1.3*	1	UN			17135716	
5	17135732	PLASTIC PLATE L548xh310	1	UN			17135732	
6	85638310	CONTROL PANEL BRACKET	1	UN			85638310	
7	85634582	COVER STOP CONTROL PANEL S3500	2	UN			85634582	
8	85631422	EMERGENCY STOP BUTTON	1	UN			85631422	

BASIC S4500 FRONT FACE

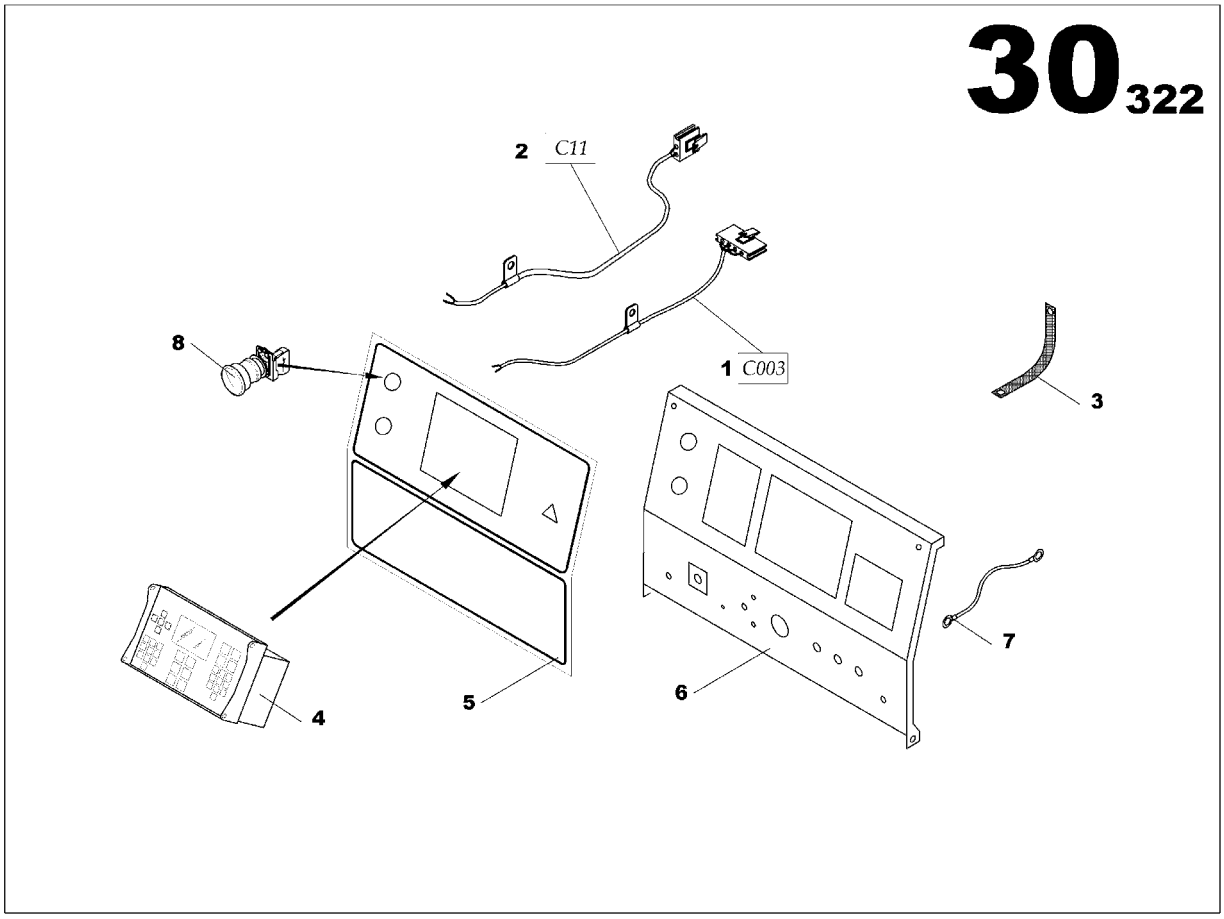

BASIC S4500 FRONT FACE
85639839

Part numbers listed are only parts used in this model

Item	Part No.	Description	Qty	Un	From SN	To SN	Order PN	Page
1	85504017	INTELLISYS WIRING LOOM 003	1	UN			85504017	
2	17135708	WIRING LOOM C11 L660	1	UN			17135708	
3	85504199	GROUND WIRE 10mm2 L :200mm	1	UN			85504199	
4	17133687	INTELLISYSTM DISPLAY *-IR PLATE SOFT 1.3*	1	UN			17133687	165
5	17135740	PLASTIC PLATE L548xh310	1	UN			17135740	
6	85638310	CONTROL PANEL BRACKET	1	UN			85638310	
7	85634582	COVER STOP CONTROL PANEL S3500	2	UN			85634582	
8	85631422	EMERGENCY STOP BUTTON	1	UN			85631422	

INTELLISYS tm DISPLAY

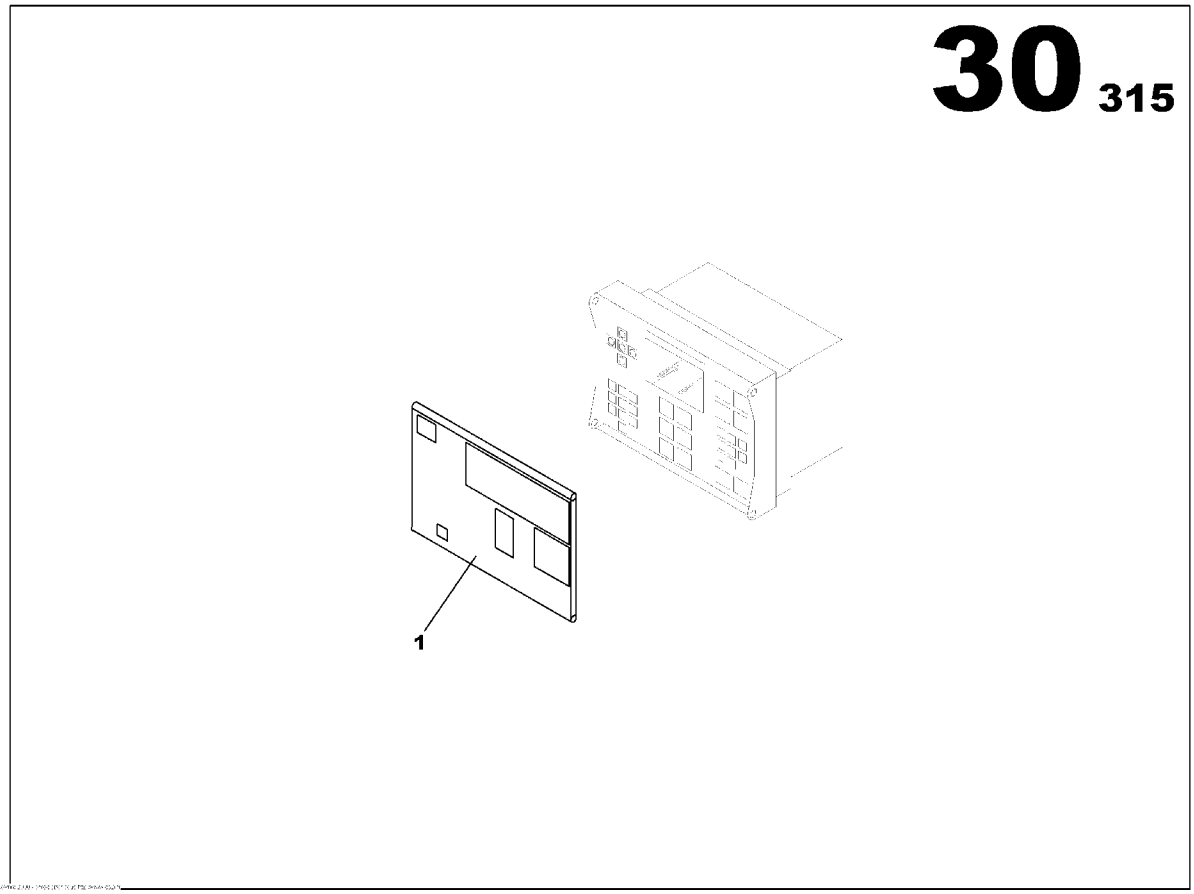

INTELLISYS tm DISPLAY
17133687

Part numbers listed are only parts used in this model

Item	Part No.	Description	Qty	Un	From SN	To SN	Order PN	Page
1	85626828	INTELLYSYS DISPLAY COVER	1	UN			85626828	

WIRING LOOM FUNCTION

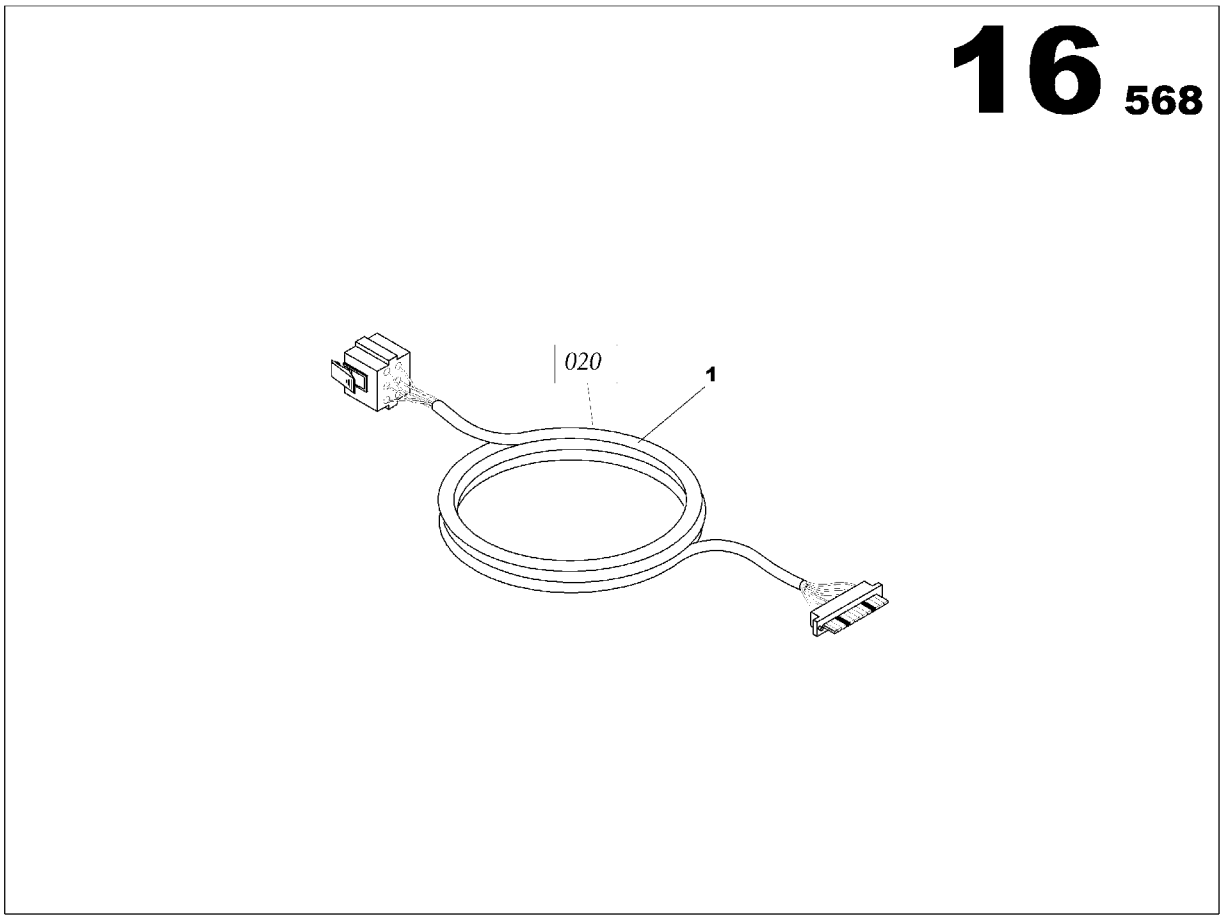

WIRING LOOM FUNCTION

Part numbers listed are only parts used in this model

Item	Part No.	Description	Qty	Un	From SN	To SN	Order PN	Page
1	17132846	INTELLISYS 020 WIRING LOOM ASSEMBLY JD 6081	1	UN			17132846	169
2	85635415	INTELLISYS 035 WIRING LOOM ASSEMBLY JD 6081	1	UN			85635415	171

INTELLISYS 020 WIRING LOOM ASSEMBLY JD 6081

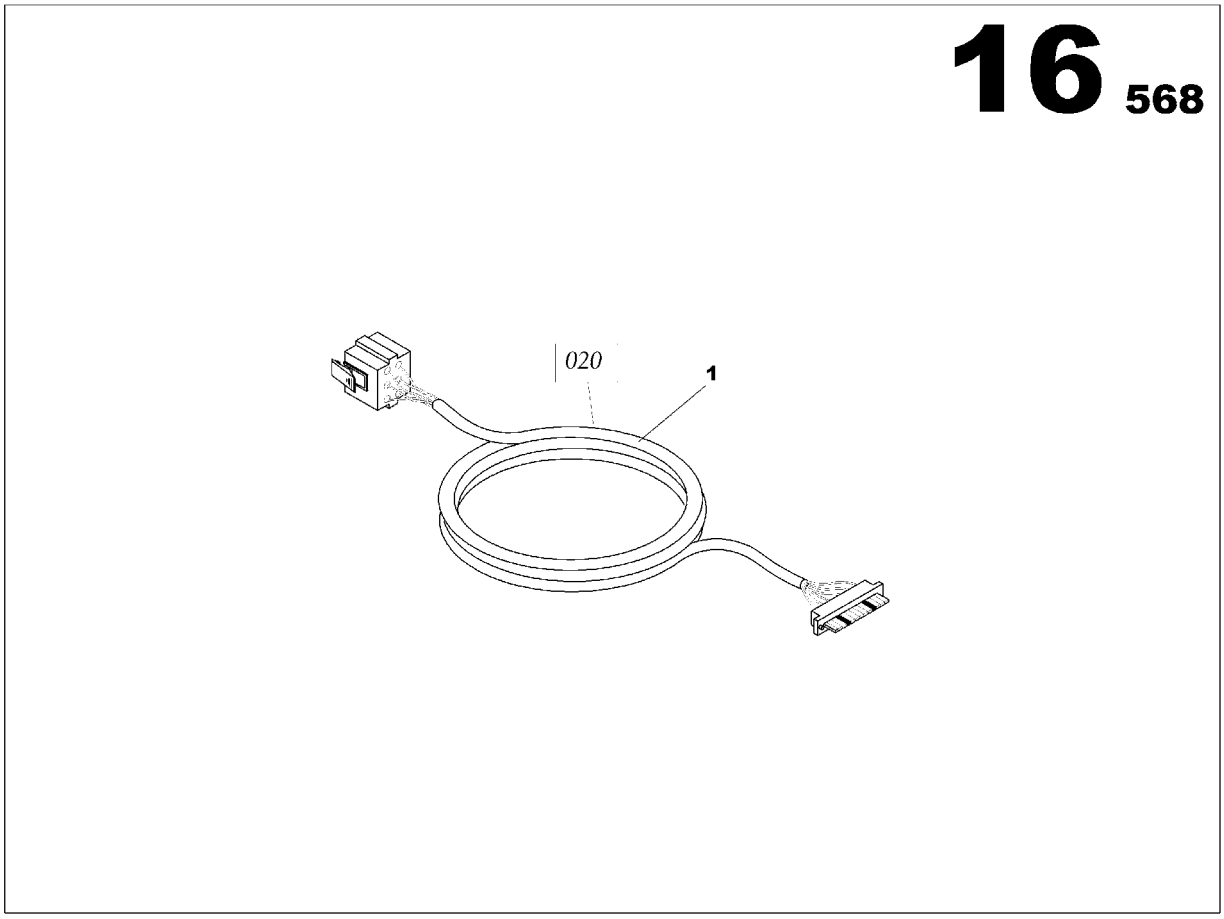

INTELLISYS 020 WIRING LOOM ASSEMBLY JD 6081
17132846

Part numbers listed are only parts used in this model

Item	Part No.	Description	Qty	Un	From SN	To SN	Order PN	Page
1	85410942	INTELLISYS WIRING LOOM 020	1	UN			85410942	

INTELLISYS 035 WIRING LOOM ASSEMBLY JD 6081

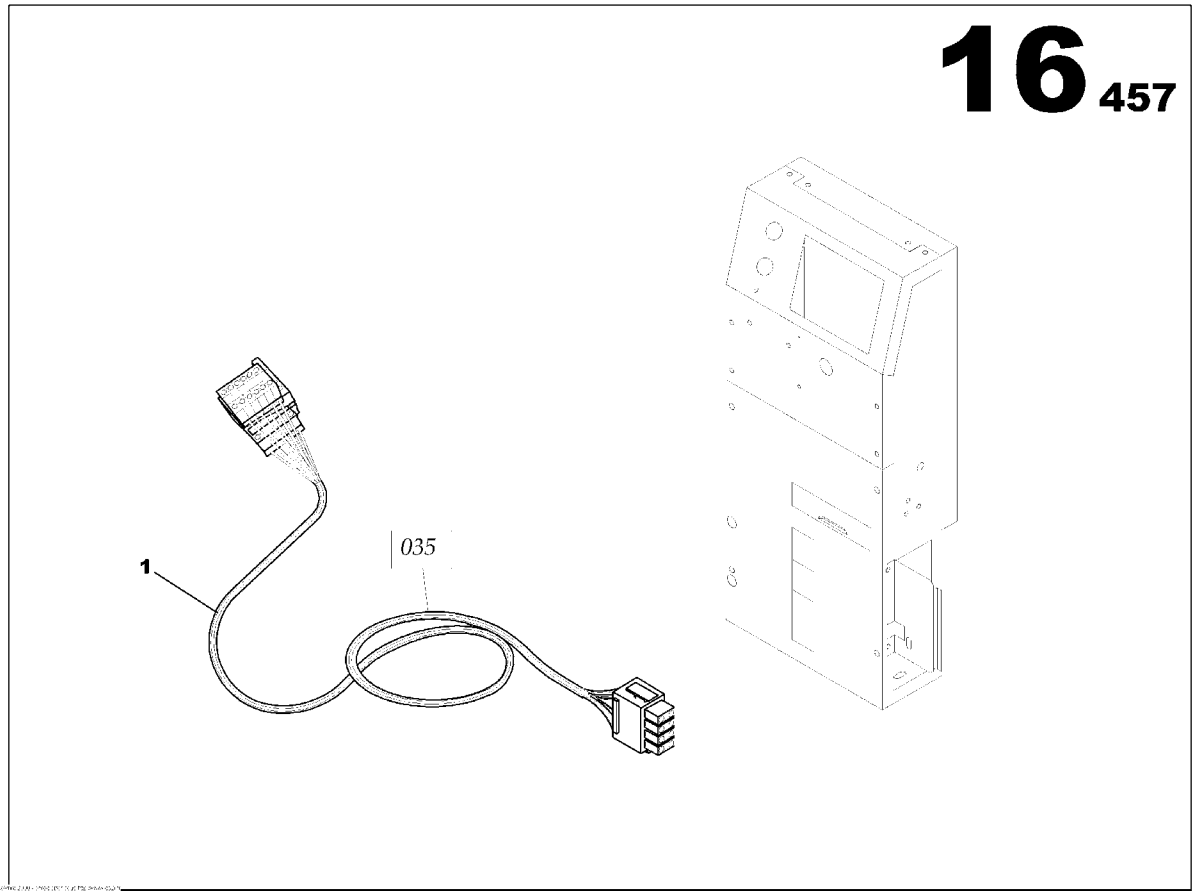

INTELLISYS 035 WIRING LOOM ASSEMBLY JD 6081
85635415

Part numbers listed are only parts used in this model

Item	Part No.	Description	Qty	Un	From SN	To SN	Order PN	Page
1	85635308	INTELLISYS WIRING LOOM 035	1	UN	02010280		85635308	

ELECTRIC SUPPLY FUNCTION

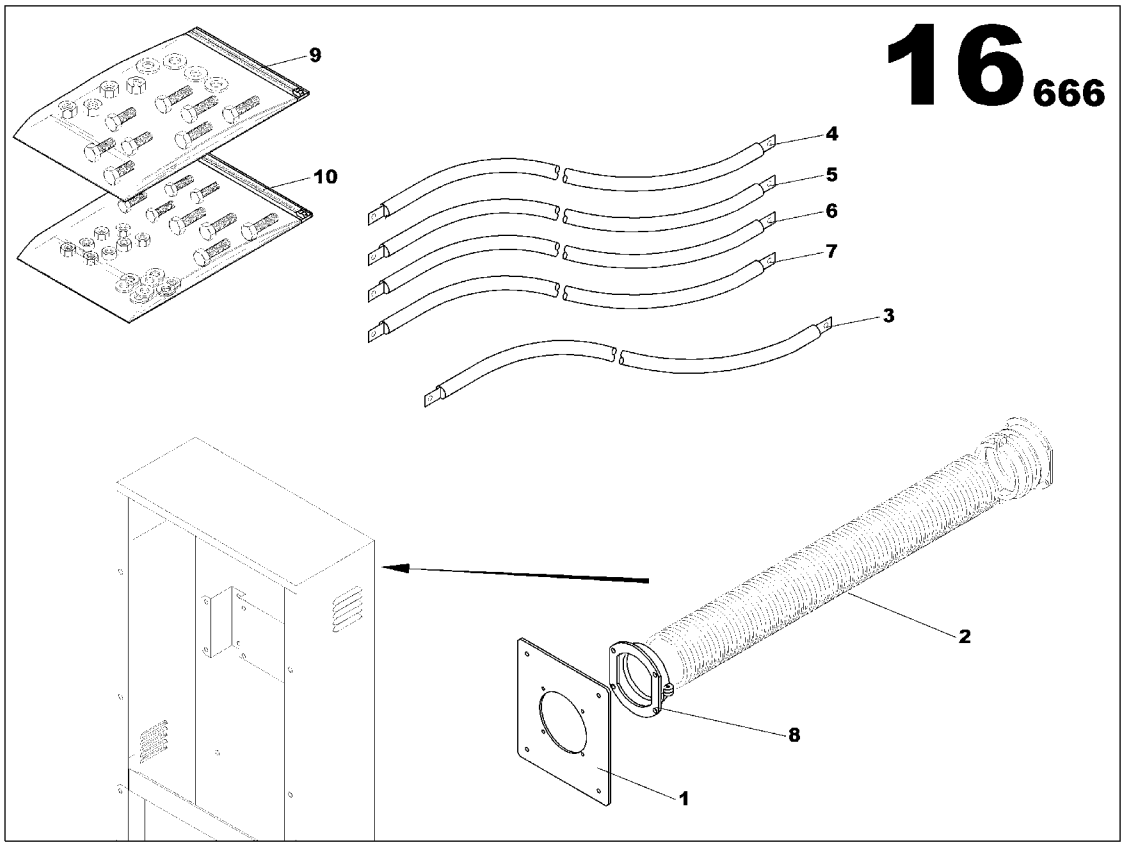

ELECTRIC SUPPLY FUNCTION

Part numbers listed are only parts used in this model

Item	Part No.	Description	Qty	Un	From SN	To SN	Order PN	Page
1	17139924	ELECTRIC CONNECTION 630A ASSEMBLY	1	UN			17139924	175
2	17140062	AIPR ASSEMBLY	1	UN			17140062	181
3	17140203	AIPR 630A ASSEMBLY	1	UN			17140203	191
4	17133083	RELEASE COIL ASSEMBLY	1	UN			17133083	205

ELECTRIC CONNECTION 630A ASSEMBLY

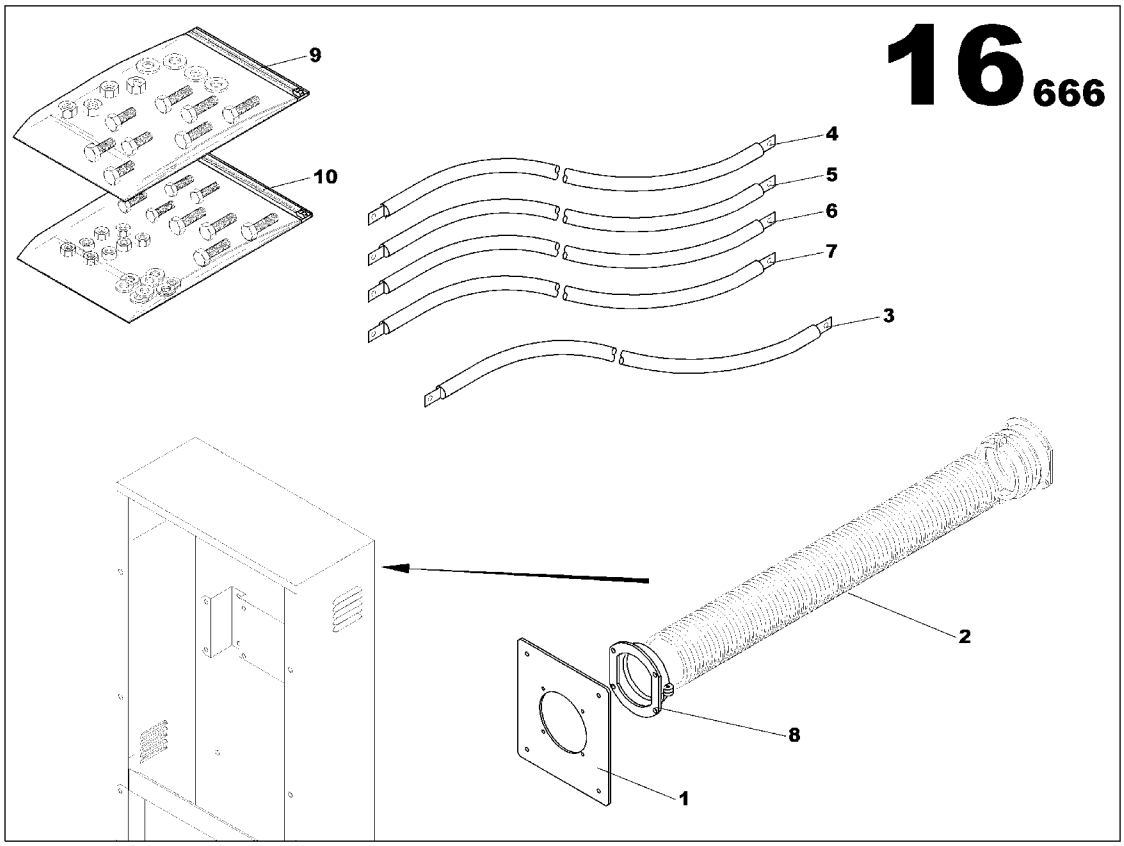

ELECTRIC CONNECTION 630A ASSEMBLY
17139924

Part numbers listed are only parts used in this model

Item	Part No.	Description	Qty	Un	From SN	To SN	Order PN	Page
1	17139833	PLATEN PANEL ALTERNATOR OPTION	1	UN			17139833	
2	85499499	ELECTRICAL SHAFT D48	0.85	ML			85499499	
3	17140310	EARTHING CABLE 50mm2 L2000	1	UN			17140310	
4	17140575	POWER CABLE AIPR 630A	1	UN			17140575	
5	17140583	POWER CABLE AIPR 630A	1	UN			17140583	
6	17140591	POWER CABLE AIPR 630A	1	UN			17140591	
7	17140609	POWER CABLE AIPR 630A	1	UN			17140609	
8	85499754	PIPE UNION PG70	1	UN			85499754	
9	85639383	SCREWS ASSEMBLY	1	UN			85639383	177
10	85639417	SCREWS ASSEMBLY	1	UN			85639417	179

SCREWS ASSEMBLY

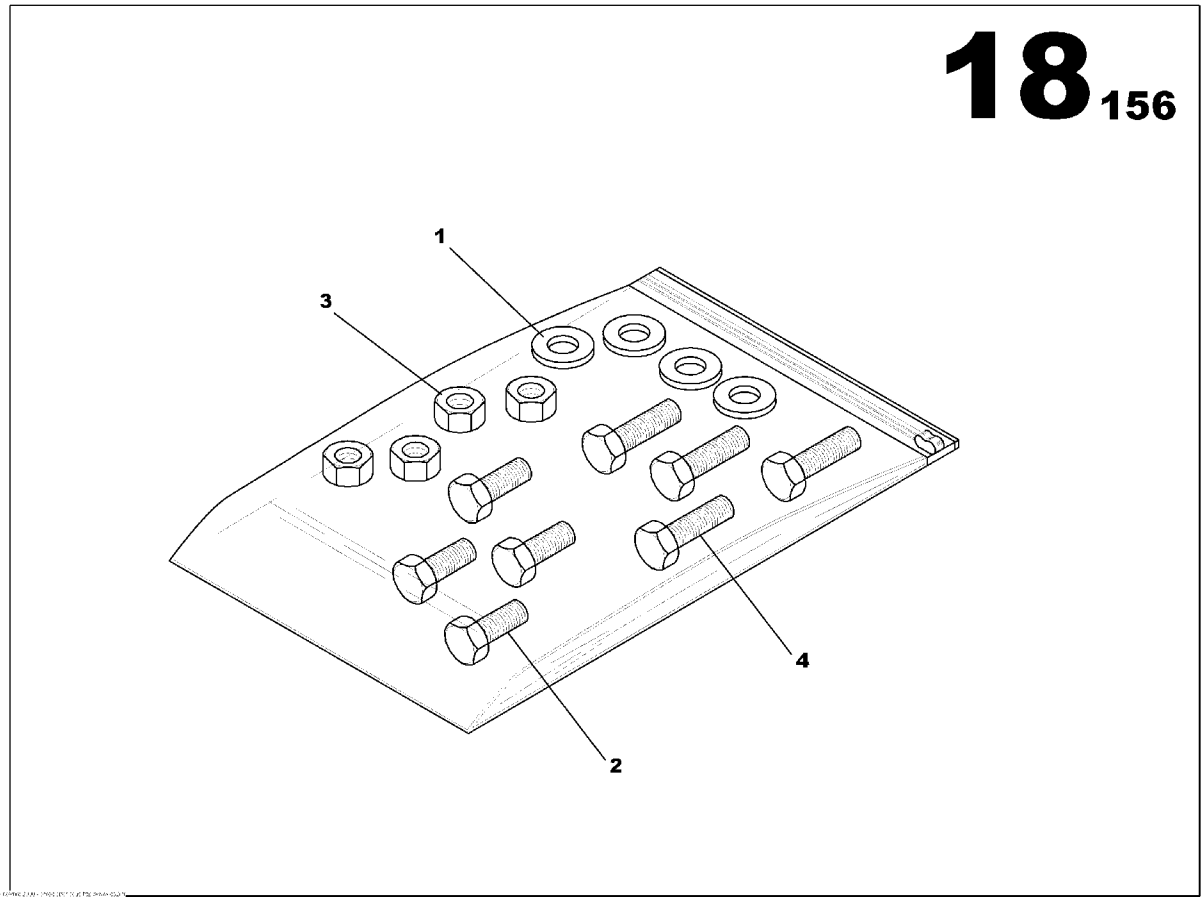

SCREWS ASSEMBLY
85639383

Part numbers listed are only parts used in this model

Item	Part No.	Description	Qty	Un	From SN	To SN	Order PN	Page
1	85636736	WASHER 6x12	4	UN			85636736	
2	85639318	SCREW H M6x16	4	UN	02010754		85639318	
3	85507911	NUT M6	4	UN			85507911	

SCREWS ASSEMBLY

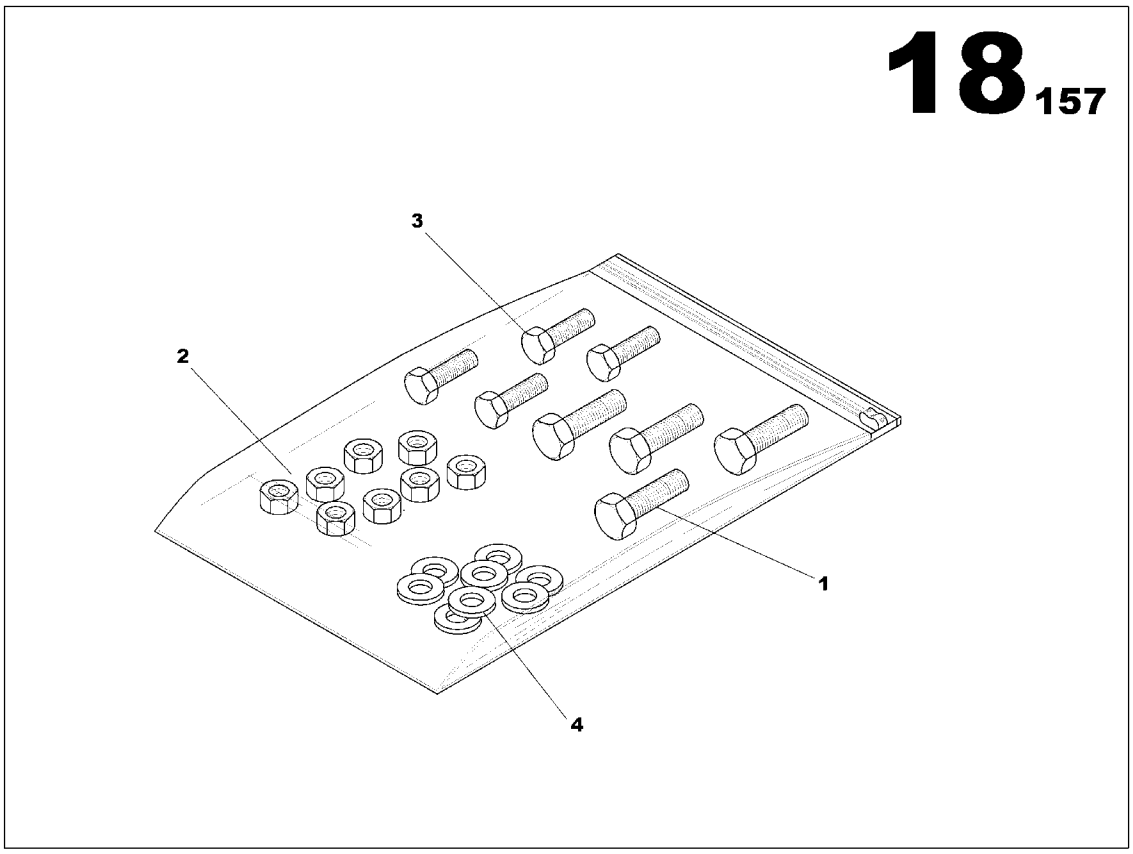

SCREWS ASSEMBLY
85639417

Part numbers listed are only parts used in this model

Item	Part No.	Description	Qty	Un	From SN	To SN	Order PN	Page
1	85636389	SCREW H M6x16	4	UN			85636389	
2	85429553	NUT M4	4	UN			85429553	
3	85636363	SCREW HS M4x16	4	UN			85636363	
4	85636728	WASHER 4x10	8	UN			85636728	

AIPR ASSEMBLY

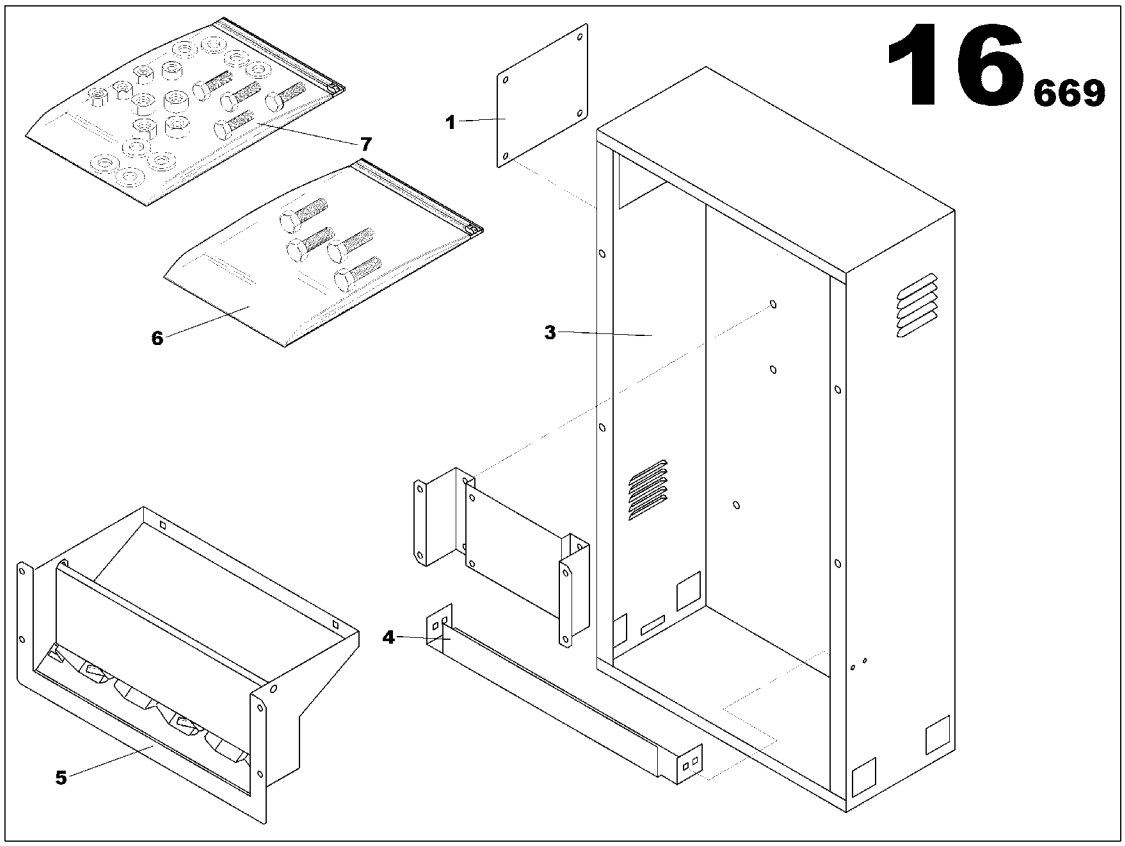

AIPR ASSEMBLY
17140062

Part numbers listed are only parts used in this model

Item	Part No.	Description	Qty	Un	From SN	To SN	Order PN	Page
1	17139676	GROUND WIRE 16mm2	1	UN			17139676	
2	17132192	GROUND WIRE 16mm2	1	UN			17132192	
3	17140054	AIPR ASSEMBLY	1	UN			17140054	183

AIPR ASSEMBLY

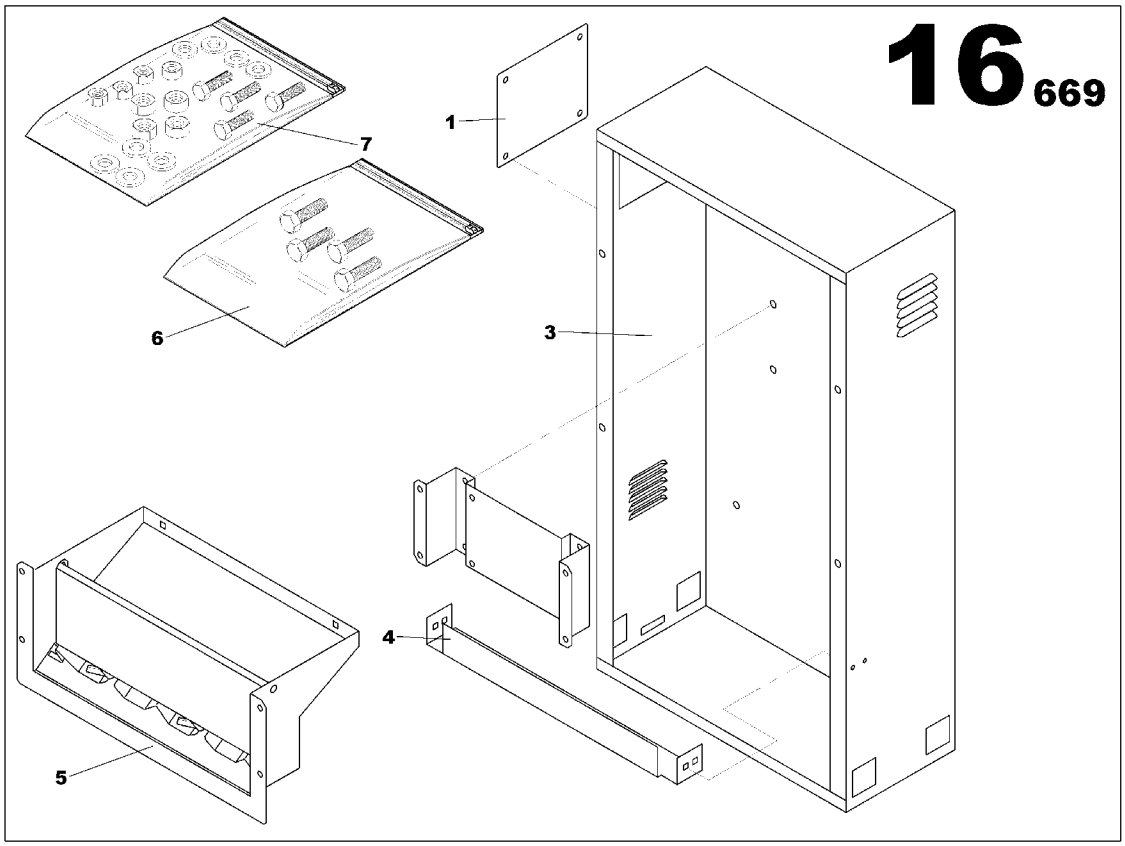

AIPR ASSEMBLY
17140054

Part numbers listed are only parts used in this model

Item	Part No.	Description	Qty	Un	From SN	To SN	Order PN	Page
1	17139858	PLATEN PANEL ALTERNATOR OPTION	1	UN			17139858	
2	17139882	CONTROL PANEL CIRCUIT BREAKER BRACKET	1	UN			17139882	
3	17139965	CIRCUIT BREAKER HOUSING	1	UN			17139965	
4	17140047	CABLE OUTLET PLATE	1	UN			17140047	
5	17140161	BRACKET CABLE COLLAR AIPR ASSEMBLY	1	UN			17140161	185
6	17140880	SCREWS MCPS AIPR ASSEMBLY	1	UN			17140880	187
7	17140898	SCREWS MCPS AIPR ASSEMBLY	1	UN			17140898	189

BRACKET CABLE COLLAR AIPR ASSEMBLY

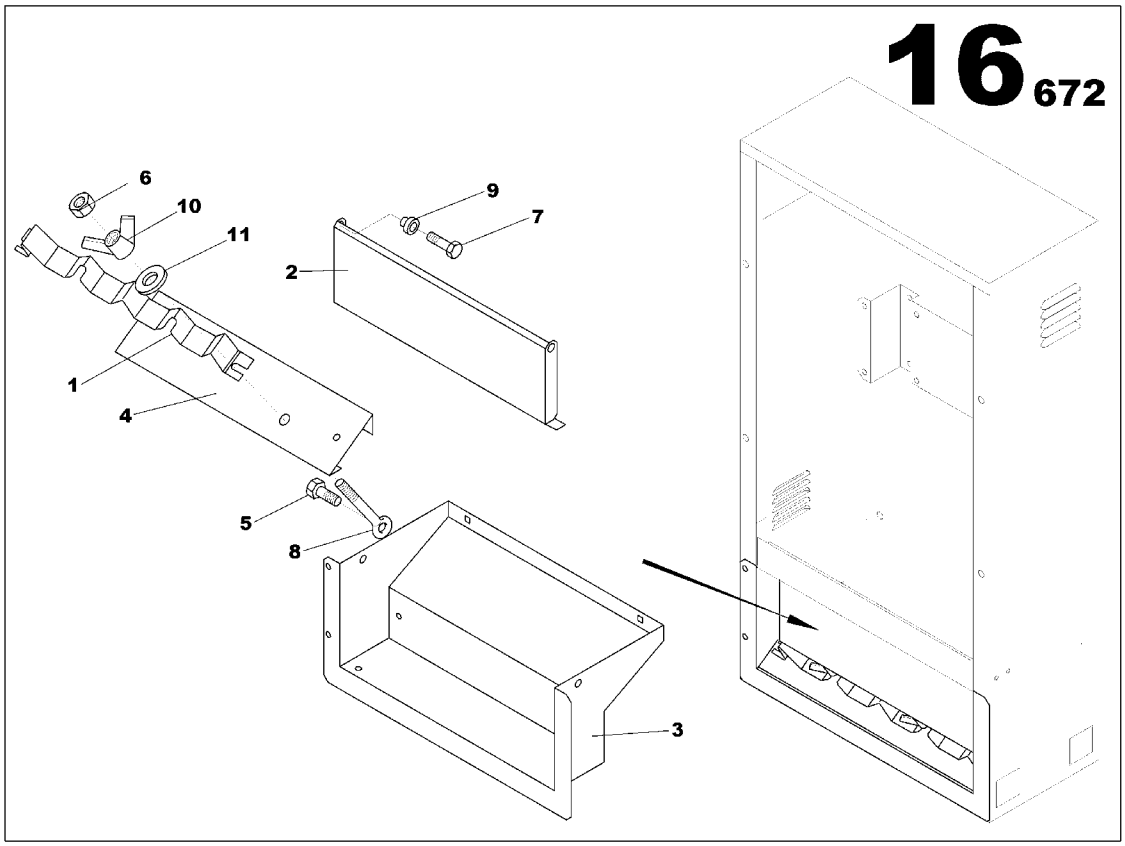

BRACKET CABLE COLLAR AIPR ASSEMBLY
17140161

Part numbers listed are only parts used in this model

Item	Part No.	Description	Qty	Un	From SN	To SN	Order PN	Page
1	17139684	CABLE AIPR BRACKET	1	UN			17139684	
2	17140096	TOLE BASCULANTE AIPR	1	UN			17140096	
3	17140146	CABLE PASSAGE PANEL M405	1	UN			17140146	
4	17140153	CABLE COLLAR AIPR BRACKET	1	UN			17140153	
5	85429744	SCREW H M8x25	2	UN			85429744	
6	17133240	NUT M8	2	UN			17133240	
7	85636389	SCREW H M6x16	2	UN			85636389	
8	17133257	SCREW	2	UN			17133257	
9	85636660	SLEAVE BEARING	2	UN			85636660	
10	85410140	WING NUT M8	2	UN			85410140	
11	85430213	WASHER 8x18	2	UN			85430213	

SCREWS MCPS AIPR ASSEMBLY

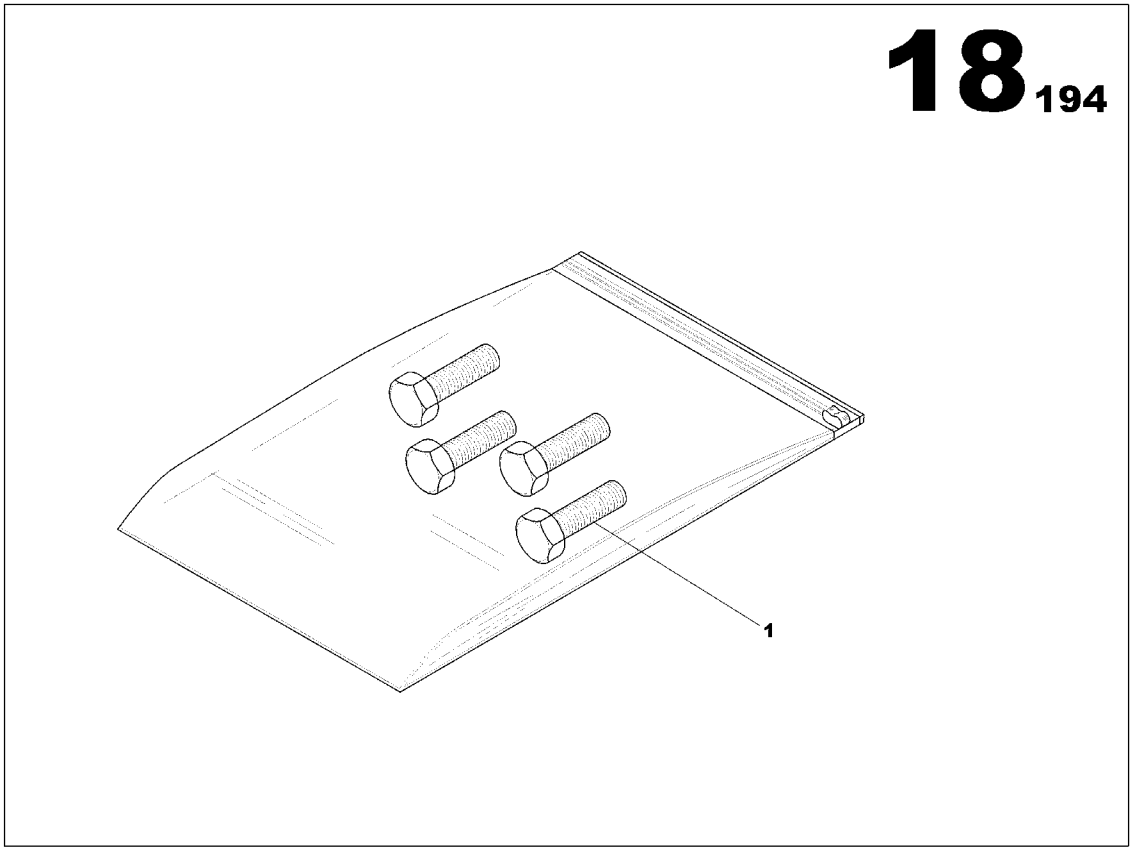

SCREWS MCPS AIPR ASSEMBLY
17140880

Part numbers listed are only parts used in this model

Item	Part No.	Description	Qty	Un	From SN	To SN	Order PN	Page
1	85636389	SCREW H M6x16	4	UN			85636389	

SCREWS MCPS AIPR ASSEMBLY

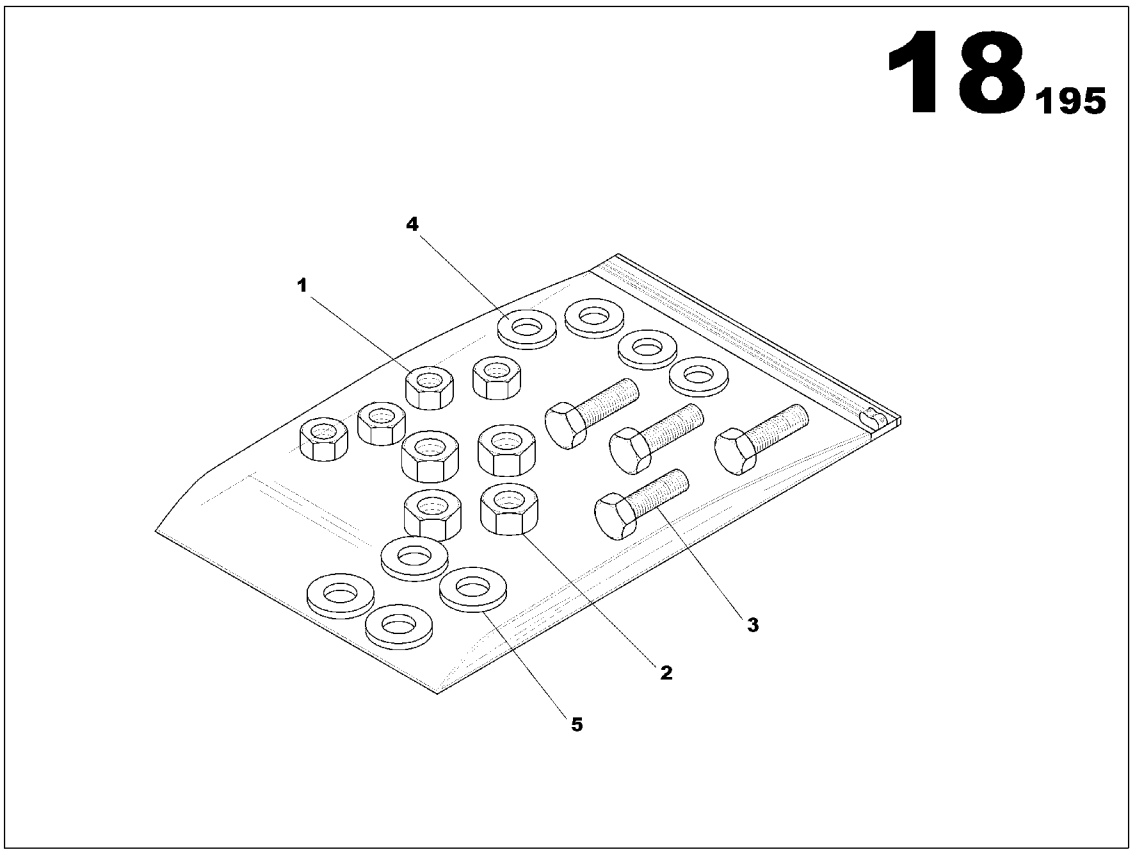

SCREWS MCPS AIPR ASSEMBLY
17140898

Part numbers listed are only parts used in this model

Item	Part No.	Description	Qty	Un	From SN	To SN	Order PN	Page
1	85507911	NUT M6	4	UN			85507911	
2	85509743	NUT M8	4	UN			85509743	
3	85636371	SCREW H M8x20	4	UN			85636371	
4	85429793	WASHER 6x14	4	UN			85429793	
5	85636751	WASHER 8x16	4	UN			85636751	

AIPR 630A ASSEMBLY

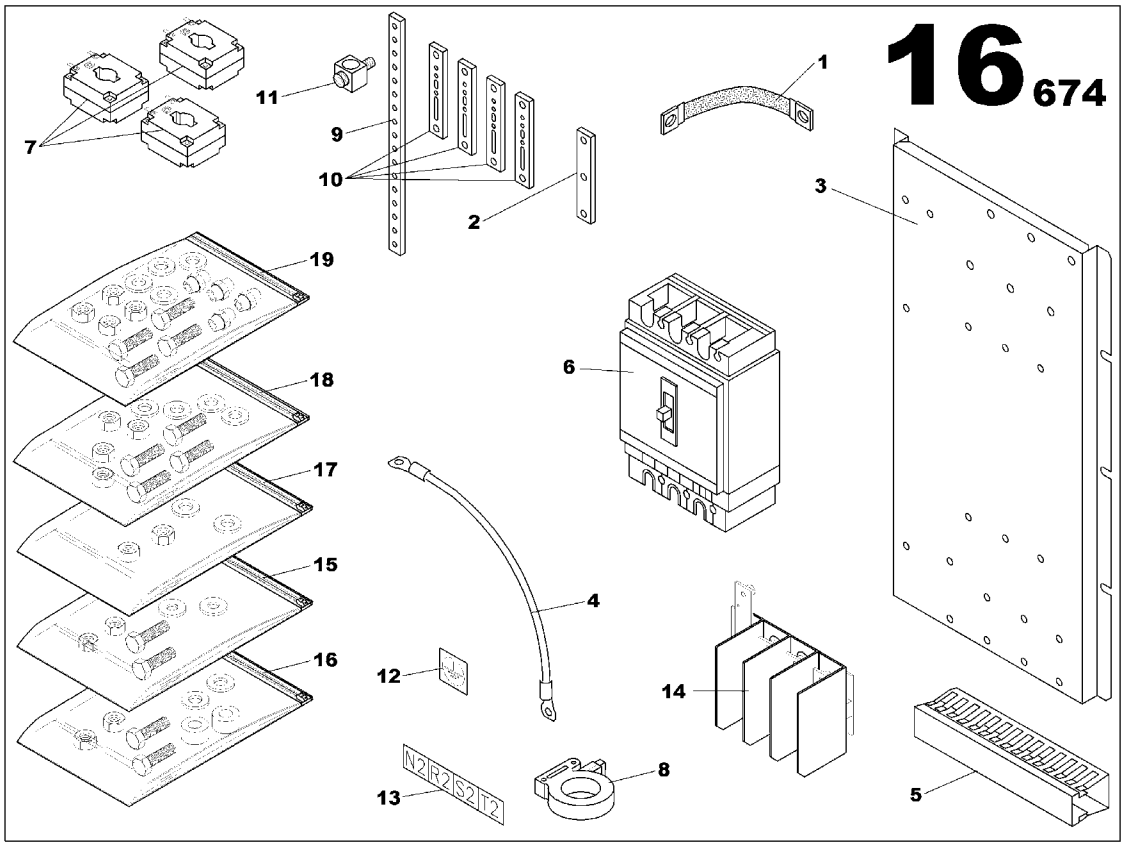

AIPR 630A ASSEMBLY
17140203

Part numbers listed are only parts used in this model

Item	Part No.	Description	Qty	Un	From SN	To SN	Order PN	Page
1	17132192	GROUND WIRE 16mm2	1	UN			17132192	
2	85416915	COPPER BAR 10x30	1	UN			85416915	
3	17132457	CIRCUIT BREAKER AIPR BRACKET	1	UN			17132457	
4	85638849	NEUTRAL/EARTH SYSTEM CABLE 35mm2	1	UN			85638849	
5	17133018	WIRING LOOM SUPPORT	0.5	ML			17133018	
6	85417913	COMPACT CIRCUIT BREAKER 4x630A	1	UN			85417913	
7	85639029	CURRENT TRANSFORMER 600/5	3	UN			85639029	
8	85635886	TORE	1	UN			85635886	
9	17135039	COPPER BAR 5x30	1	UN			17135039	
10	17133125	COPPER BAR 10x30	4	UN			17133125	
11	17133133	TERMINALS	1	UN			17133133	
12	85409084	STICKER EARTH SYMBOL	1	UN			85409084	
13	85409126	STICKER POWER LINK	1	UN			85409126	
14	17133117	SEPARATOR SCREEN ASSEMBLY	1	UN			17133117	193
15	85636454	SCREWS ASSEMBLY	1	UN			85636454	195
16	17133265	SCREWS MCPS AIPR ASSEMBLY	1	UN			17133265	197
17	17133273	SCREWS MCPS AIPR ASSEMBLY	1	UN			17133273	199
18	17133281	SCREWS MCPS AIPR ASSEMBLY	1	UN			17133281	201
19	17133299	SCREWS MCPS AIPR ASSEMBLY	1	UN			17133299	203

SEPARATOR SCREEN ASSEMBLY

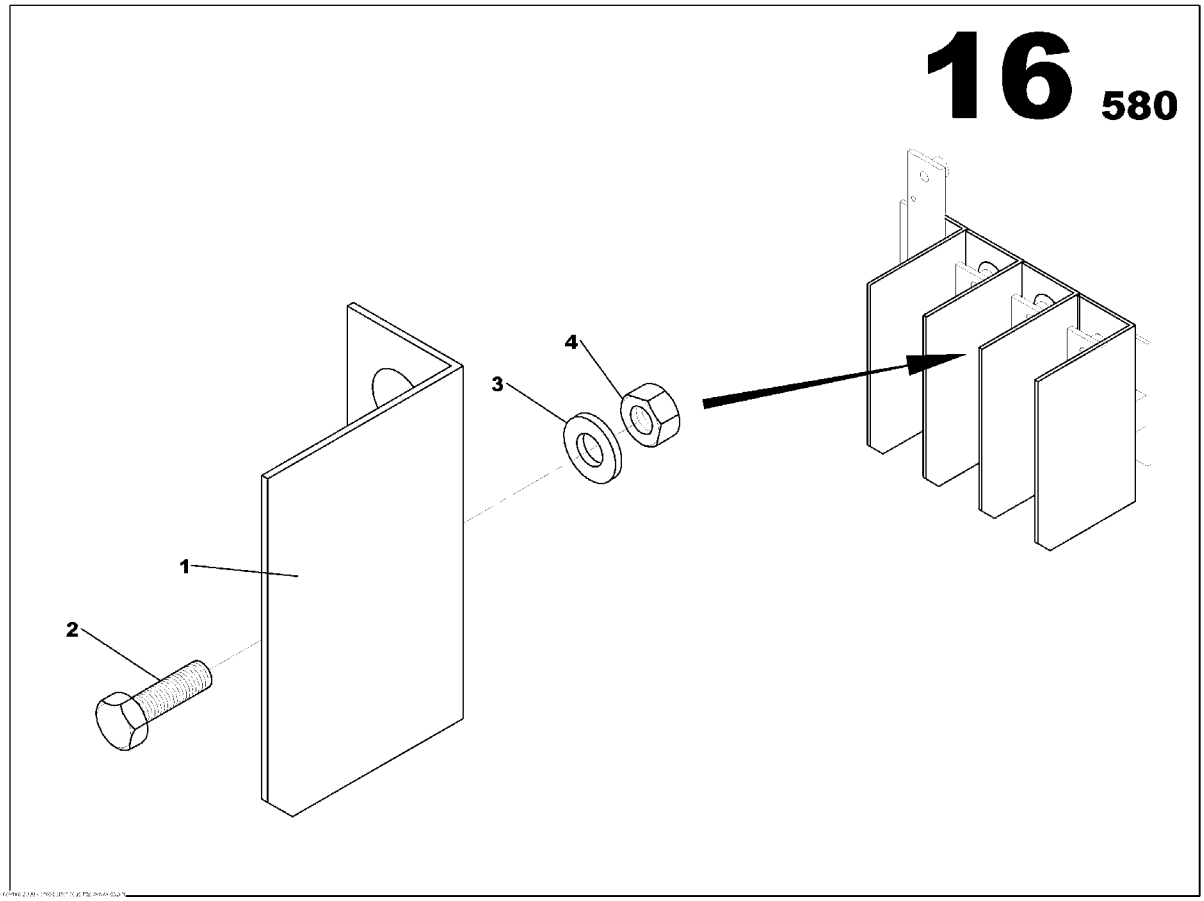

SEPARATOR SCREEN ASSEMBLY
17133117

Part numbers listed are only parts used in this model

Item	Part No.	Description	Qty	Un	From SN	To SN	Order PN	Page
1	17133109	PHASE ISOLATOR AIPR	4	UN			17133109	
2	85636389	SCREW H M6x16	4	UN			85636389	
3	85429793	WASHER 6x14	4	UN			85429793	
4	85507911	NUT M6	4	UN			85507911	

SCREWS ASSEMBLY

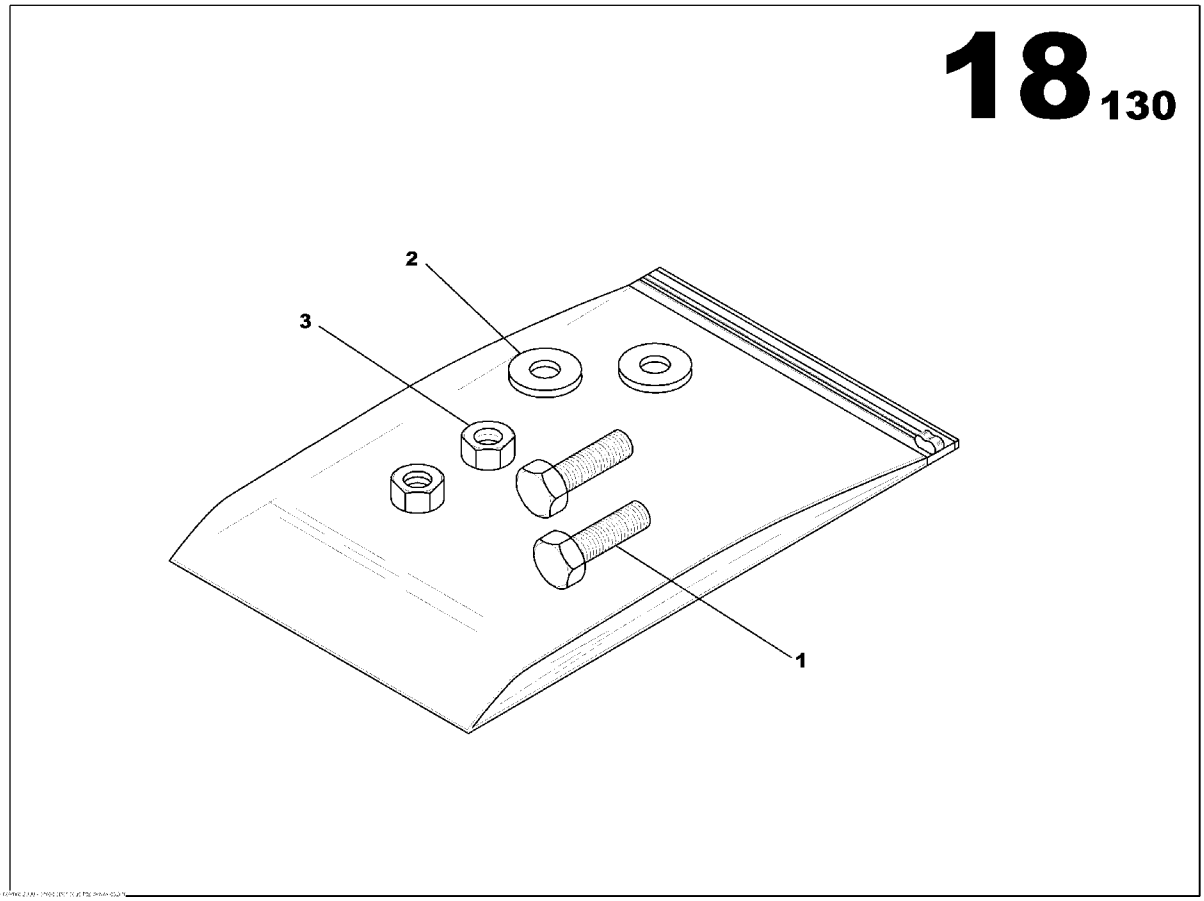

SCREWS ASSEMBLY
85636454

Part numbers listed are only parts used in this model

Item	Part No.	Description	Qty	Un	From SN	To SN	Order PN	Page
1	85636363	SCREW HS M4x16	2	UN			85636363	
2	85636728	WASHER 4x10	2	UN			85636728	
3	85429553	NUT M4	2	UN			85429553	

SCREWS MCPS AIPR ASSEMBLY

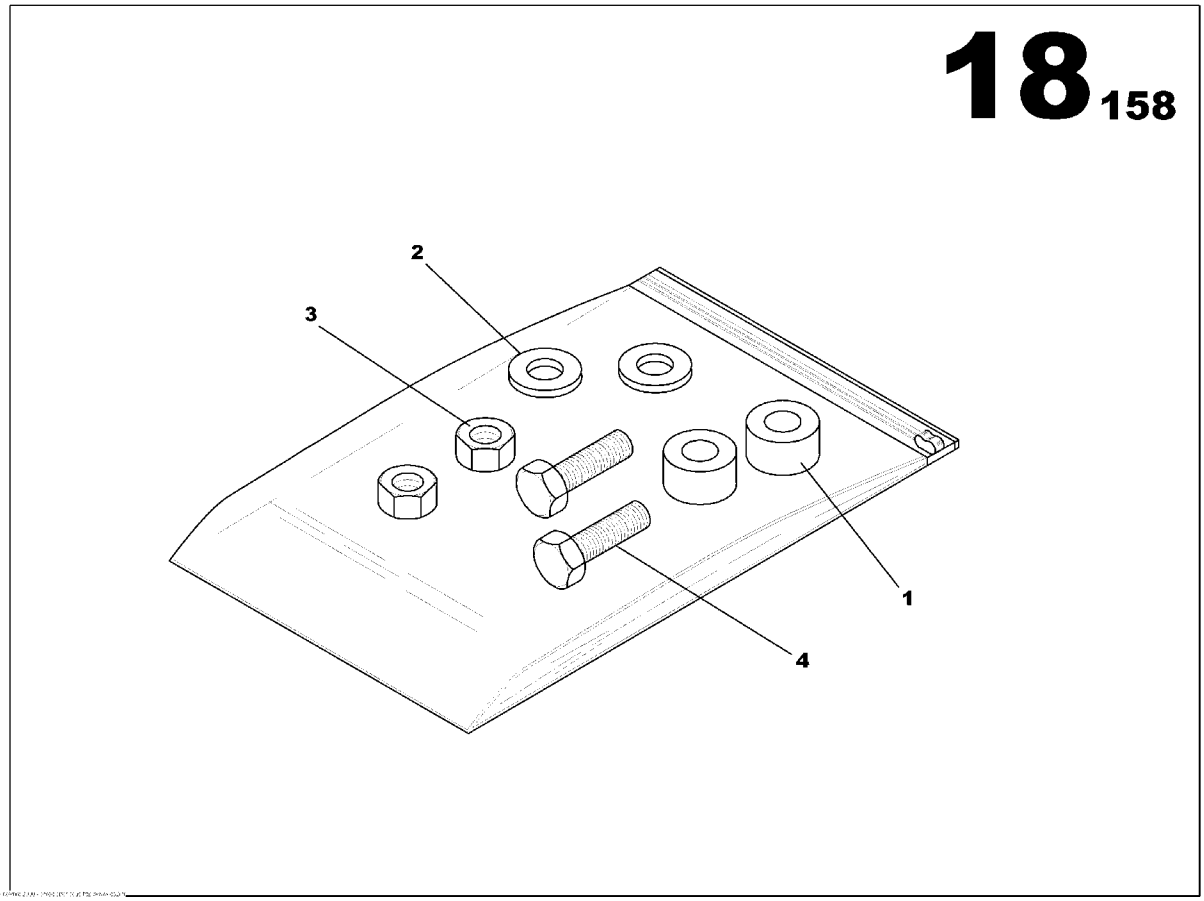

SCREWS MCPS AIPR ASSEMBLY
17133265

Part numbers listed are only parts used in this model

Item	Part No.	Description	Qty	Un	From SN	To SN	Order PN	Page
1	85639680	SPACER	2	UN			85639680	
2	85636736	WASHER 6x12	2	UN			85636736	
3	85507911	NUT M6	2	UN			85507911	
4	85636389	SCREW H M6x16	2	UN			85636389	

SCREWS MCPS AIPR ASSEMBLY

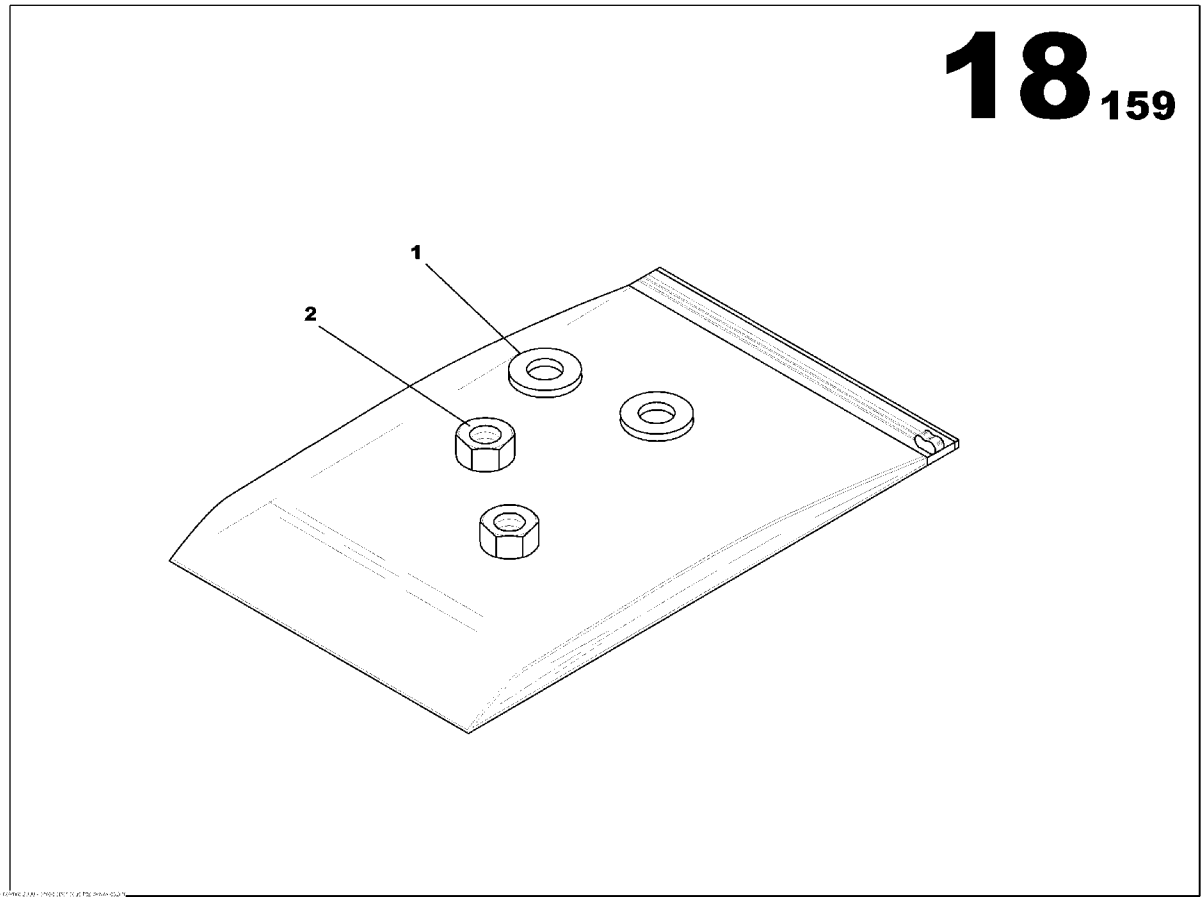

SCREWS MCPS AIPR ASSEMBLY
17133273

Part numbers listed are only parts used in this model

Item	Part No.	Description	Qty	Un	From SN	To SN	Order PN	Page
1	85636736	WASHER 6x12	2	UN			85636736	
2	85507911	NUT M6	2	UN			85507911	

SCREWS MCPS AIPR ASSEMBLY

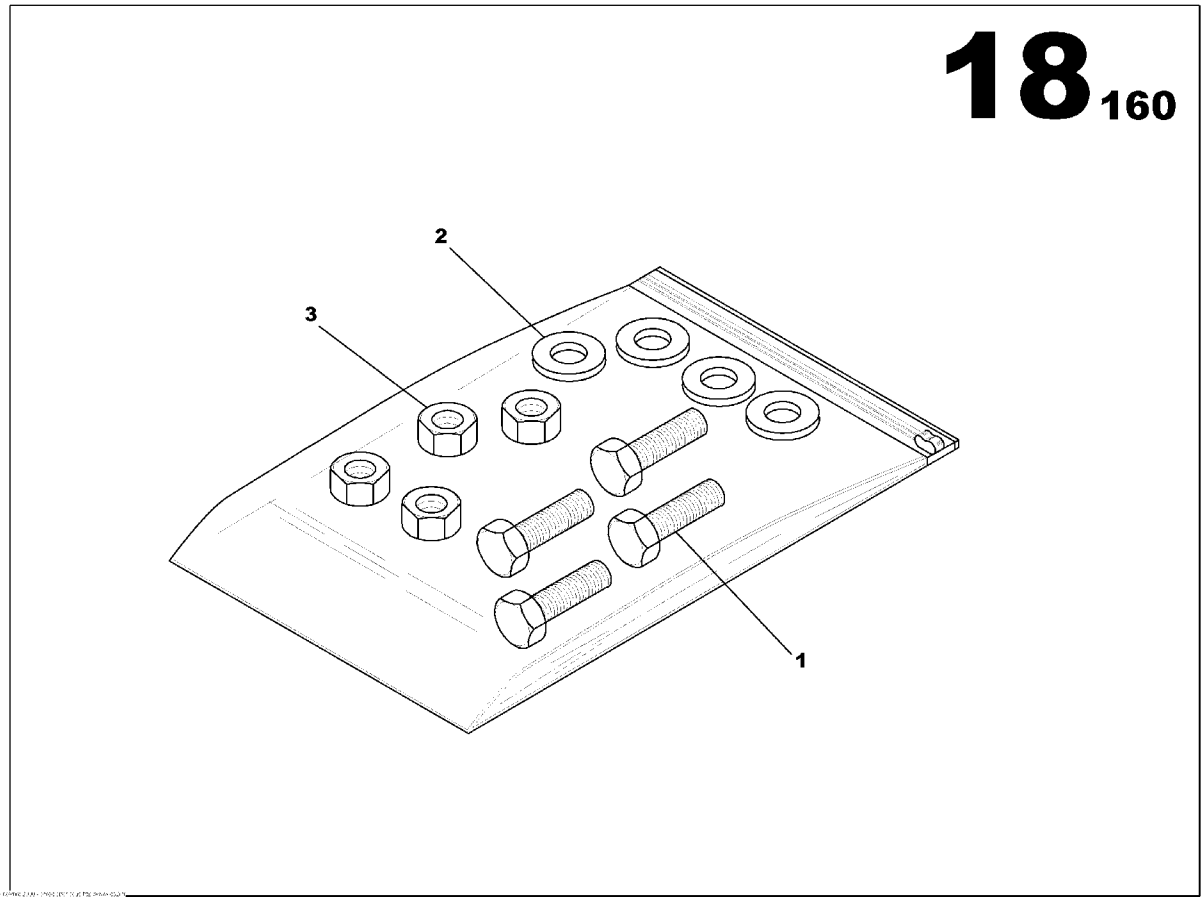

SCREWS MCPS AIPR ASSEMBLY
17133281

Part numbers listed are only parts used in this model

Item	Part No.	Description	Qty	Un	From SN	To SN	Order PN	Page
1	85636389	SCREW H M6x16	4	UN			85636389	
2	85636736	WASHER 6x12	4	UN			85636736	
3	85507911	NUT M6	4	UN			85507911	

SCREWS MCPS AIPR ASSEMBLY

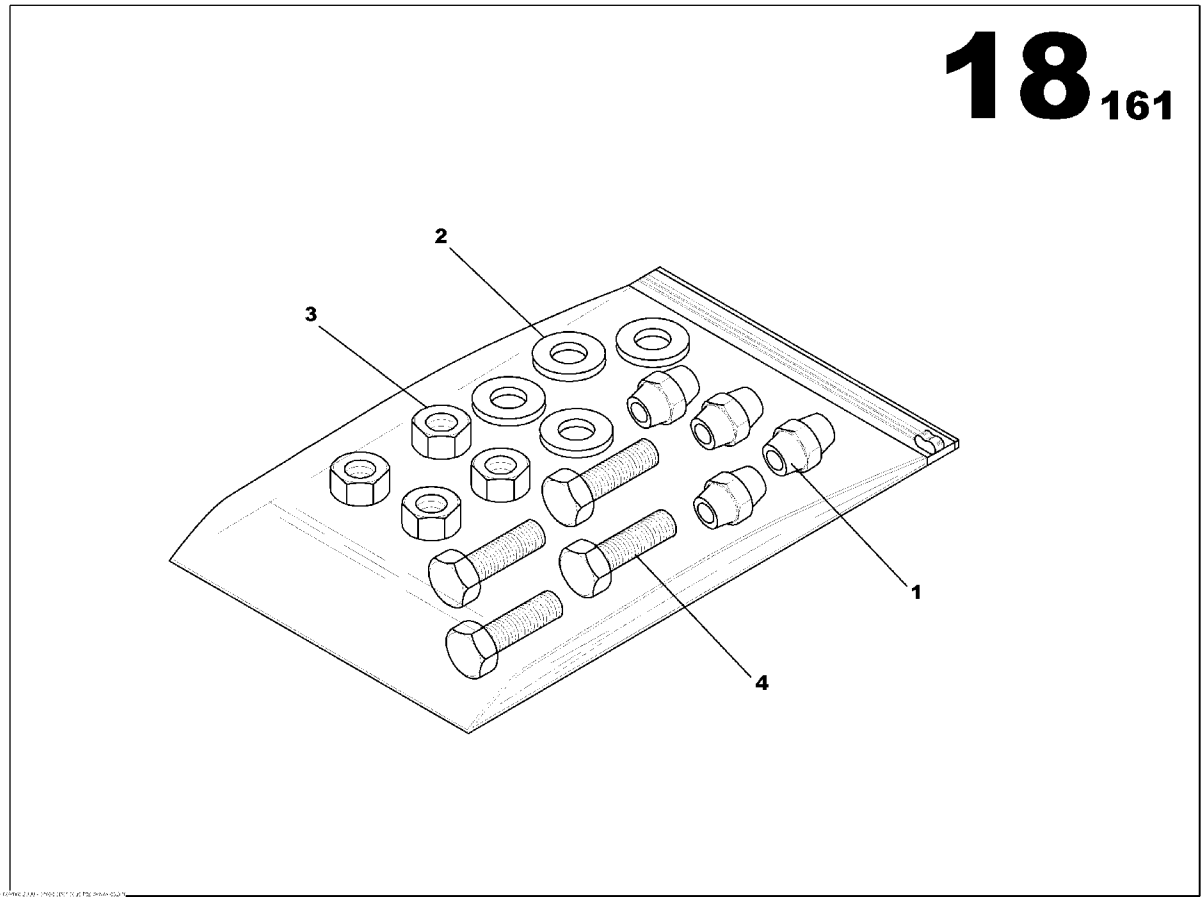

SCREWS MCPS AIPR ASSEMBLY
17133299

Part numbers listed are only parts used in this model

Item	Part No.	Description	Qty	Un	From SN	To SN	Order PN	Page
1	17133067	INSULATION PIN	4	UN			17133067	
2	85636736	WASHER 6x12	4	UN			85636736	
3	85507911	NUT M6	4	UN			85507911	
4	85636389	SCREW H M6x16	4	UN			85636389	

RELEASE COIL ASSEMBLY

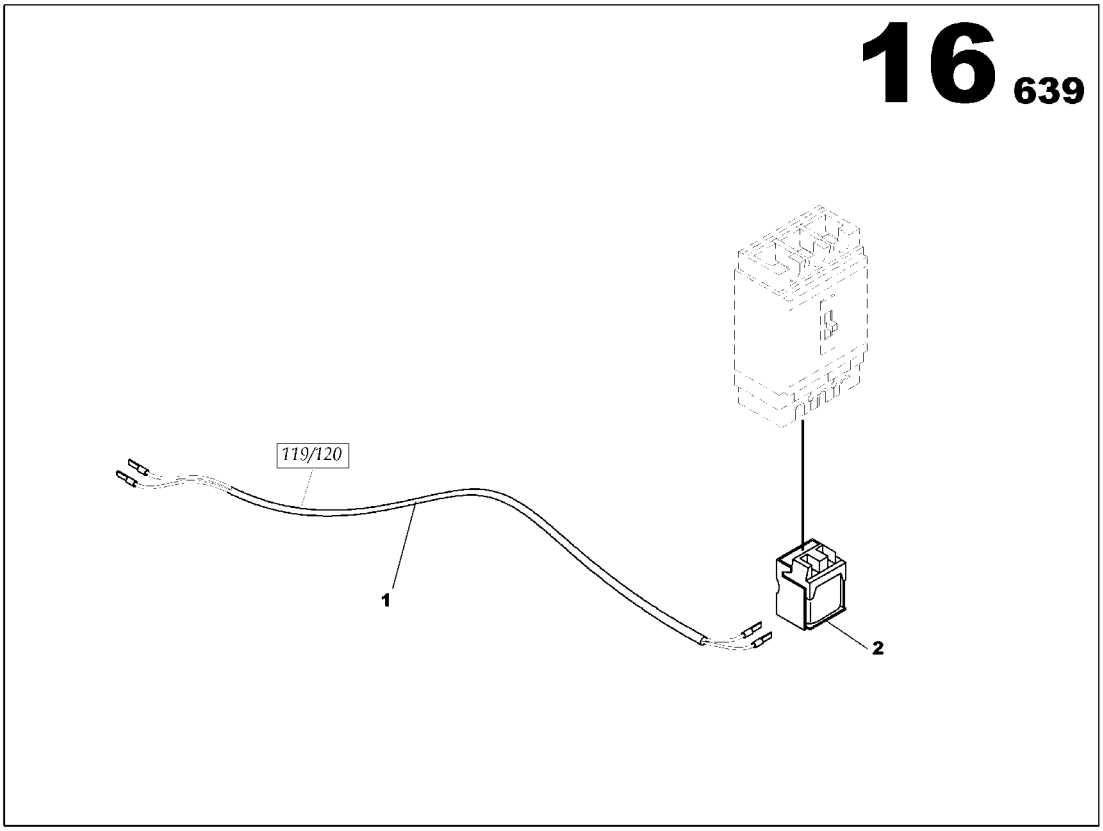

RELEASE COIL ASSEMBLY
17133083

Part numbers listed are only parts used in this model

Item	Part No.	Description	Qty	Un	From SN	To SN	Order PN	Page
1	17132812	INTELLISYS WIRING LOOM 119/120	1	UN			17132812	
2	85408573	CIRCUIT BREAKER SHUNT RELEASE COIL 200/280VAC	1	UN			85408573	

DOCUMENTATION OPTION

DOCUMENTATION OPTION

Part numbers listed are only parts used in this model

Item	Part No.	Description	Qty	Un	From SN	To SN	Order PN	Page

AUTO START OPTION

AUTO START OPTION

Part numbers listed are only parts used in this model

Item	Part No.	Description	Qty	Un	From SN	To SN	Order PN	Page
1	85629491	WATER PREHEATING ASSEMBLY	1	UN			85629491	211
2	85636173	EXTERNAL AMF PREDISPOSITION OPTION *-Information*	1	UN			85636173	215
3	17140724	WATER PREHEATING OPTION	1	UN			17140724	
4	17140732	BATTERY CHARGER OPTION	1	UN			17140732	
5	85636256	CURRENT SENSOR OPTION	1	UN			85636256	217
6	17133075	AUXILIARY CONTACT ASSEMBLY	1	UN			17133075	219
7	85635399	INTELLISYS 016 WIRING LOOM ASSEMBLY JD 6081	1	UN			85635399	221

WATER PREHEATING ASSEMBLY

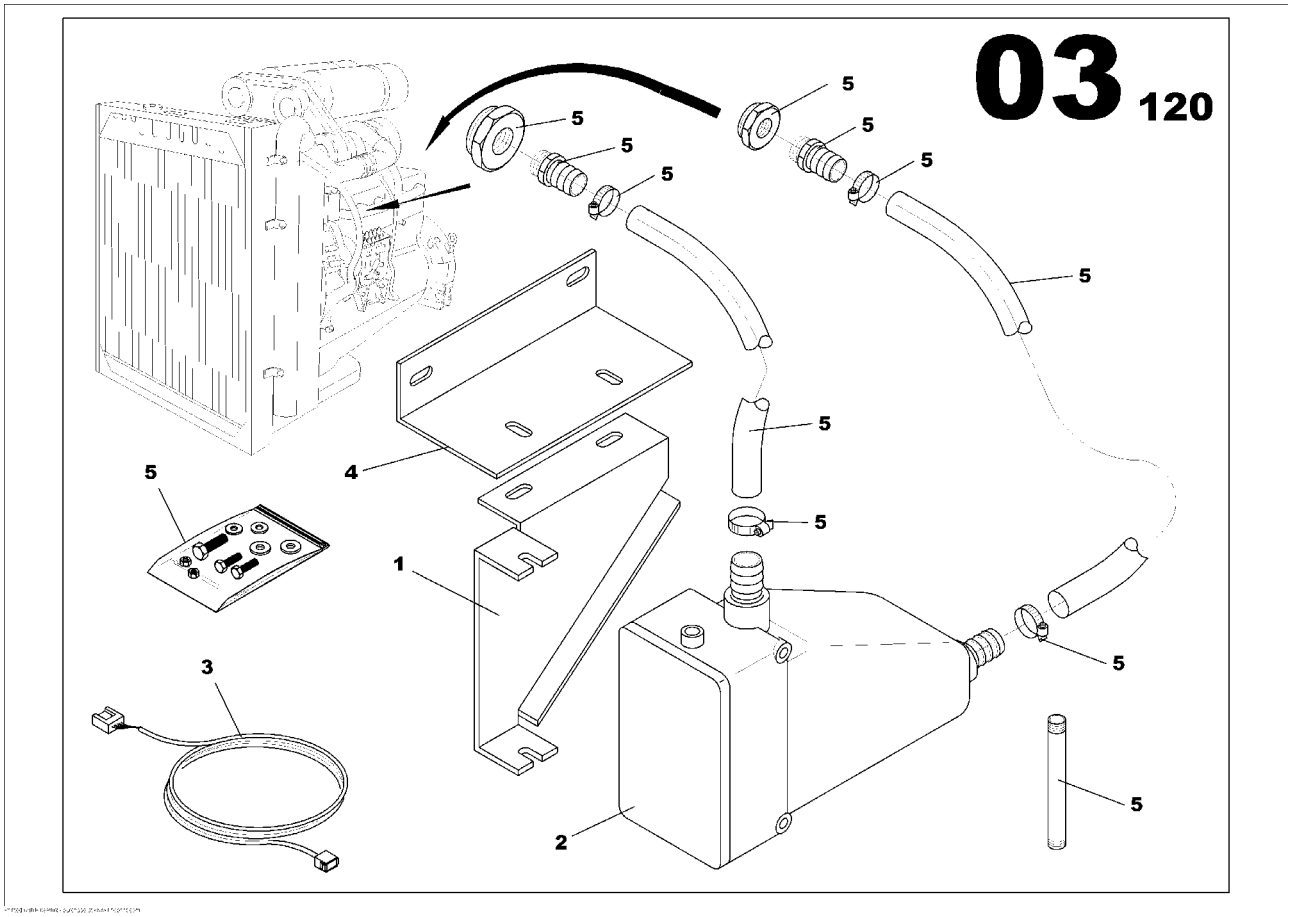

WATER PREHEATING ASSEMBLY
85629491

Part numbers listed are only parts used in this model

Item	Part No.	Description	Qty	Un	From SN	To SN	Order PN	Page
1	85430023	PREHEATER HOUSING BRACKET VOLVO 7/10L/12L	1	UN			85430023	
2	85629467	RESISTANCE HOUSING 1500W	1	UN			85629467	
3	85629475	BLOCK HEATER WIRING	1	UN			85629475	
4	85629483	PREHEATER HOUSING BRACKET VOLVO TAD1241/1242	1	UN			85629483	
5	85631554	SCREWS ASSEMBLY	1	UN			85631554	213

SCREWS ASSEMBLY

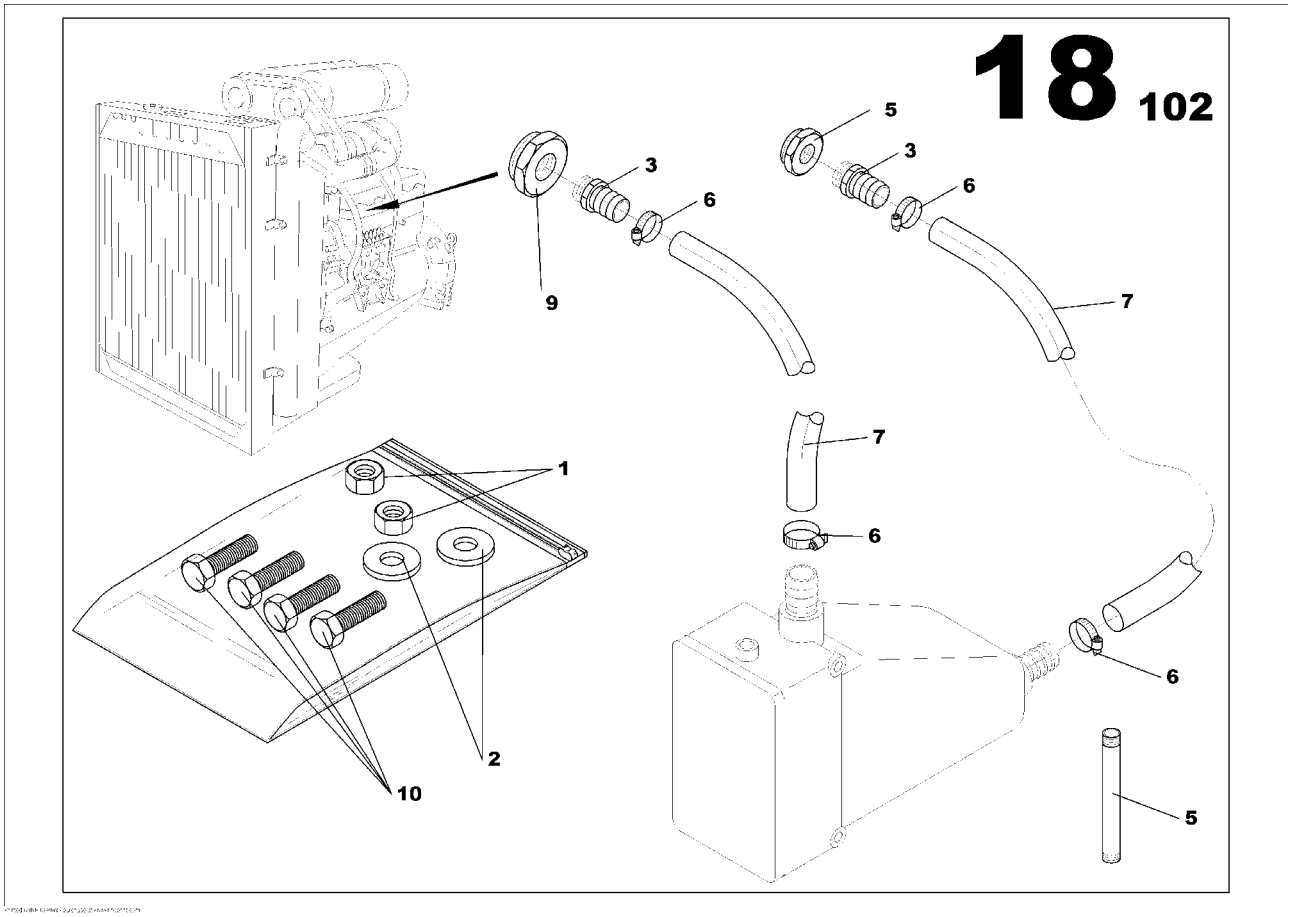

SCREWS ASSEMBLY
85631554

Part numbers listed are only parts used in this model

Item	Part No.	Description	Qty	Un	From SN	To SN	Order PN	Page
1	85509743	NUT M8	2	UN			85509743	
2	85430270	WASHER 8X22	2	UN			85430270	
3	85430254	PIPE UNION MAL/MAL 1/2G	2	UN			85430254	
4	85631661	PIPE UNION MAL/MAL 1/2G	1	UN			85631661	
5	85631687	PIPE UNION REDUCER MAL/FEM M22x150-1/2G	1	UN			85631687	
6	85409423	HOSE CLIP D20/32	4	UN			85409423	
7	85424844	FLEXIBLE HOSE D16x26	1.5	ML			85424844	
7	85424844	FLEXIBLE HOSE D16x26	0.7	ML			85424844	
9	85632248	PIPE UNION REDUCER MAL/FEM M36*150-1/2G	1	UN			85632248	
10	17140823	SCREW H M8x20	4	UN			17140823	

EXTERNAL AMF PREDISPOSITION OPTION

EXTERNAL AMF PREDISPOSITION OPTION
85636173

Part numbers listed are only parts used in this model

Item	Part No.	Description	Qty	Un	From SN	To SN	Order PN	Page

CURRENT SENSOR OPTION

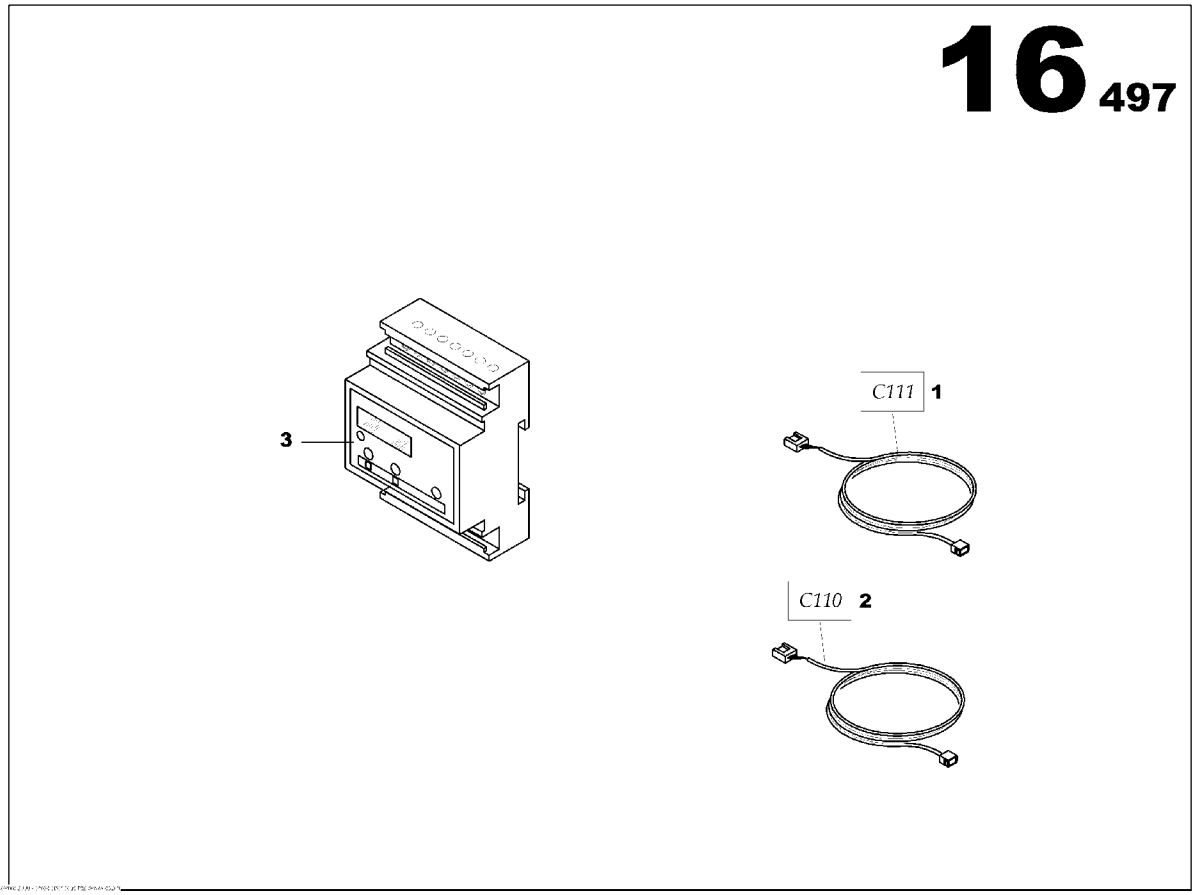

CURRENT SENSOR OPTION
85636256

Part numbers listed are only parts used in this model

Item	Part No.	Description	Qty	Un	From SN	To SN	Order PN	Page
1	85630663	WIRING LOOM C111 L800	1	UN			85630663	
2	85630721	WIRING LOOM C110 L300	1	UN			85630721	
3	85623809	CURRENT SENSOR MODULE	1	UN			85623809	

AUXILIARY CONTACT ASSEMBLY

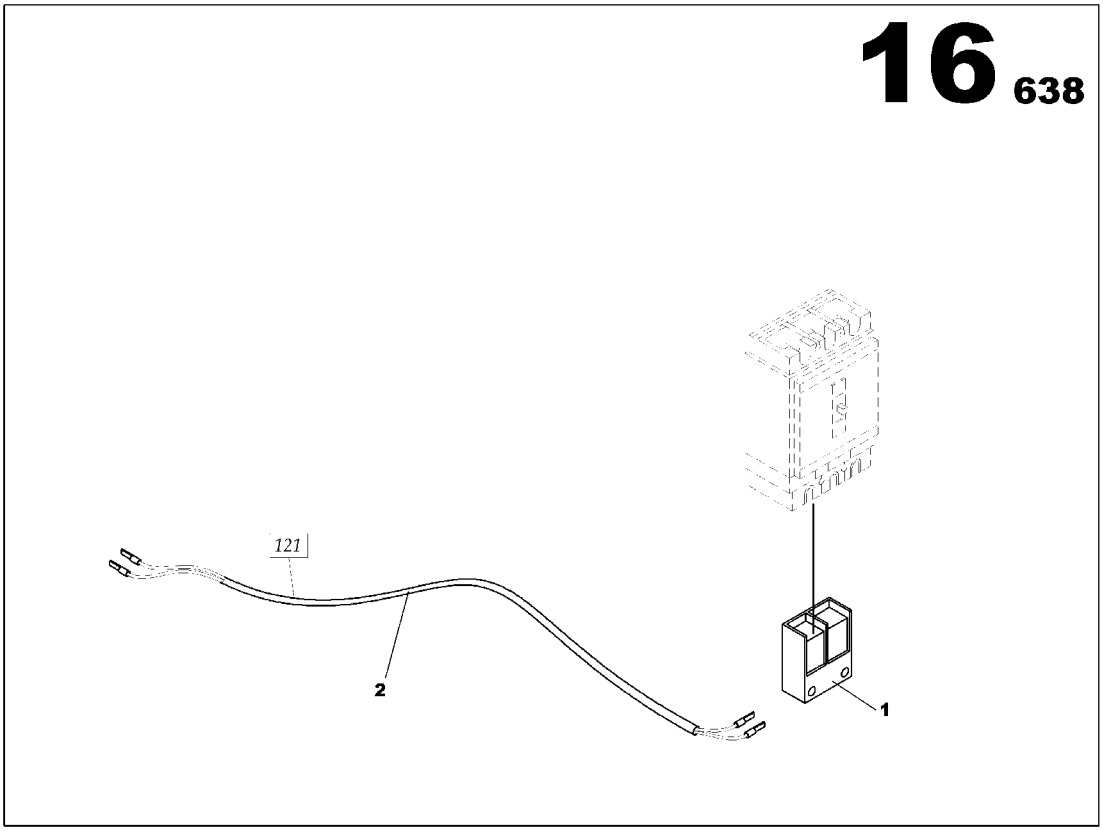

AUXILIARY CONTACT ASSEMBLY
17133075

Part numbers listed are only parts used in this model

Item	Part No.	Description	Qty	Un	From SN	To SN	Order PN	Page
1	17132820	INTELLISYS WIRING LOOM 121	1	UN			17132820	
2	85408581	AUXILARY CONTACT	1	UN			85408581	

INTELLISYS 016 WIRING LOOM ASSEMBLY JD 6081

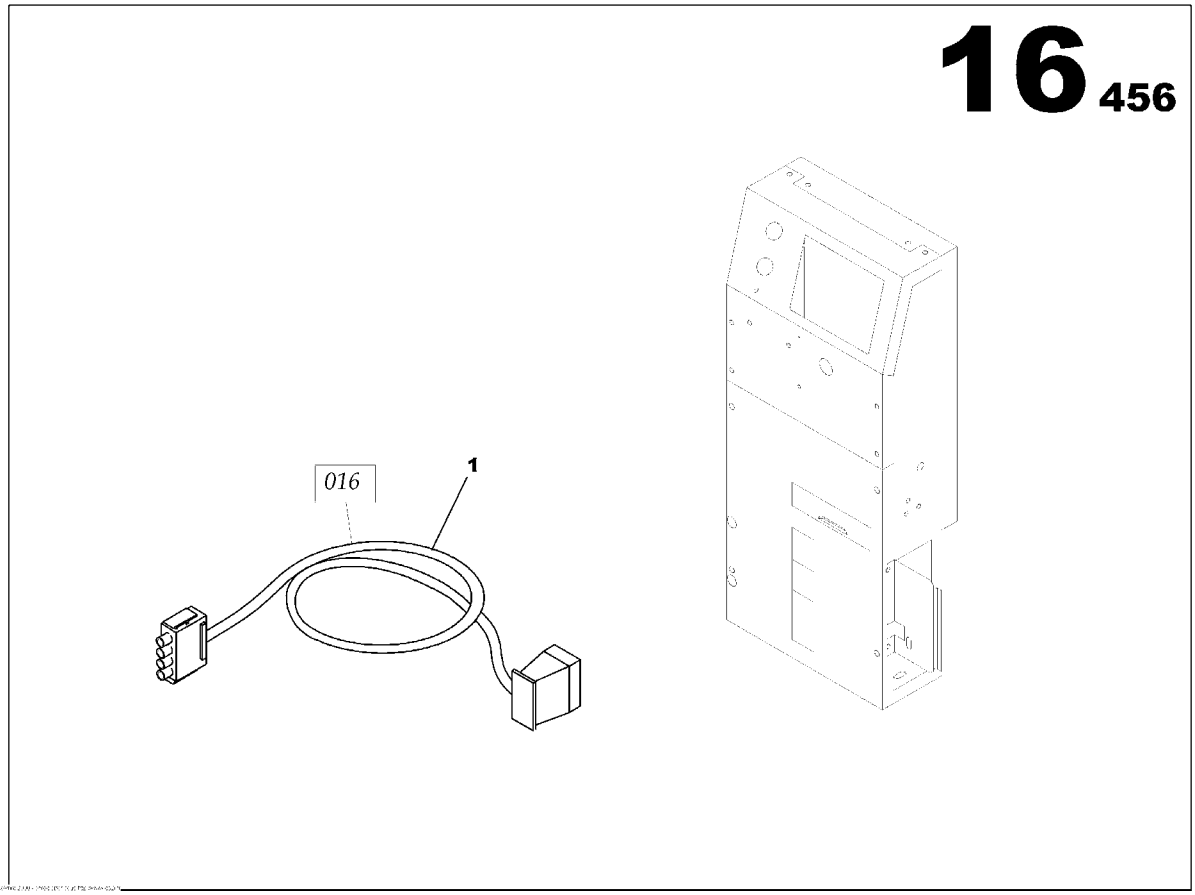

INTELLISYS 016 WIRING LOOM ASSEMBLY JD 6081
85635399

Part numbers listed are only parts used in this model

Item	Part No.	Description	Qty	Un	From SN	To SN	Order PN	Page
1	85635316	INTELLISYS WIRING LOOM 016	1	UN	02009106		85635316	

REINFORCED INSULATION OPTION

REINFORCED INSULATION OPTION

Part numbers listed are only parts used in this model

Item	Part No.	Description	Qty	Un	From SN	To SN	Order PN	Page
1	85416675	ALTERNATOR LS 471M	1	UN			85416675	225

ALTERNATOR LS 471M

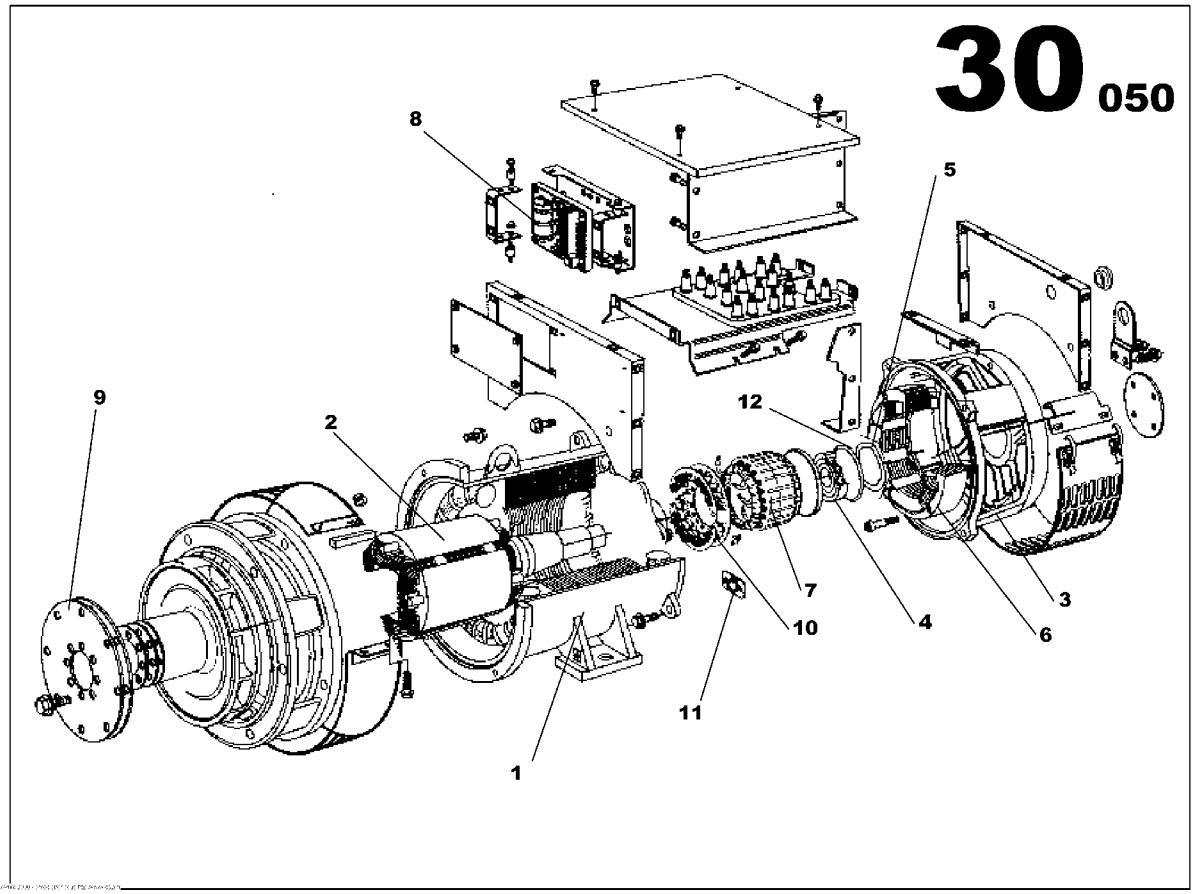

ALTERNATOR LS 471M
85416675

Part numbers listed are only parts used in this model

Item	Part No.	Description	Qty	Un	From SN	To SN	Order PN	Page
1	85508836	WOUND STATOR ASSEMBLY *Alternator S/N needed to supply this part-*	1	UN			85508836	
2	85509131	WOUND ROTOR ASSEMBLY *Alternator S/N needed to supply this part-*	1	UN			85509131	
3	85508885	N.D.E BRACKET	1	UN			85508885	
4	85425916	BALL BEARING	1	UN			85425916	
5	85509065	WAVY WASHER	1	UN			85509065	
6	85508935	WOUND EXCITER FIELD	1	UN			85508935	
7	85508984	WOUND EXCITER ARMATURE	1	UN			85508984	
8	85425577	GOVERNOR	1	UN			85425577	
9	85425957	COUPLING DISC LSA 471 and 462L6/VL12	1	UN			85425957	
10	85426179	DIODE BRIDGE	1	UN			85426179	
11	85402444	SURGE SUPPRESSOR	1	UN			85402444	
12	85509016	O RING	1	UN			85509016	

EXPLOSIVE ATHMOSPHERE OPTION

EXPLOSIVE ATHMOSPHERE OPTION

Part numbers listed are only parts used in this model

Item	Part No.	Description	Qty	Un	From SN	To SN	Order PN	Page
1	85418507	AIR SHUT OFF VALVE VO TWD1210-TAD12/16L ASSEMBLY	1	UN			85418507	229
2	85425080	SPARK ARRESTER INERIS DN175 ASSEMBLY	1	UN			85425080	231
3	17132804	INTELLISYS WIRING LOOM 021 EXTENSION	1	UN			17132804	

AIR SHUT OFF VALVE VO TWD1210-TAD12/16L ASSEMBLY

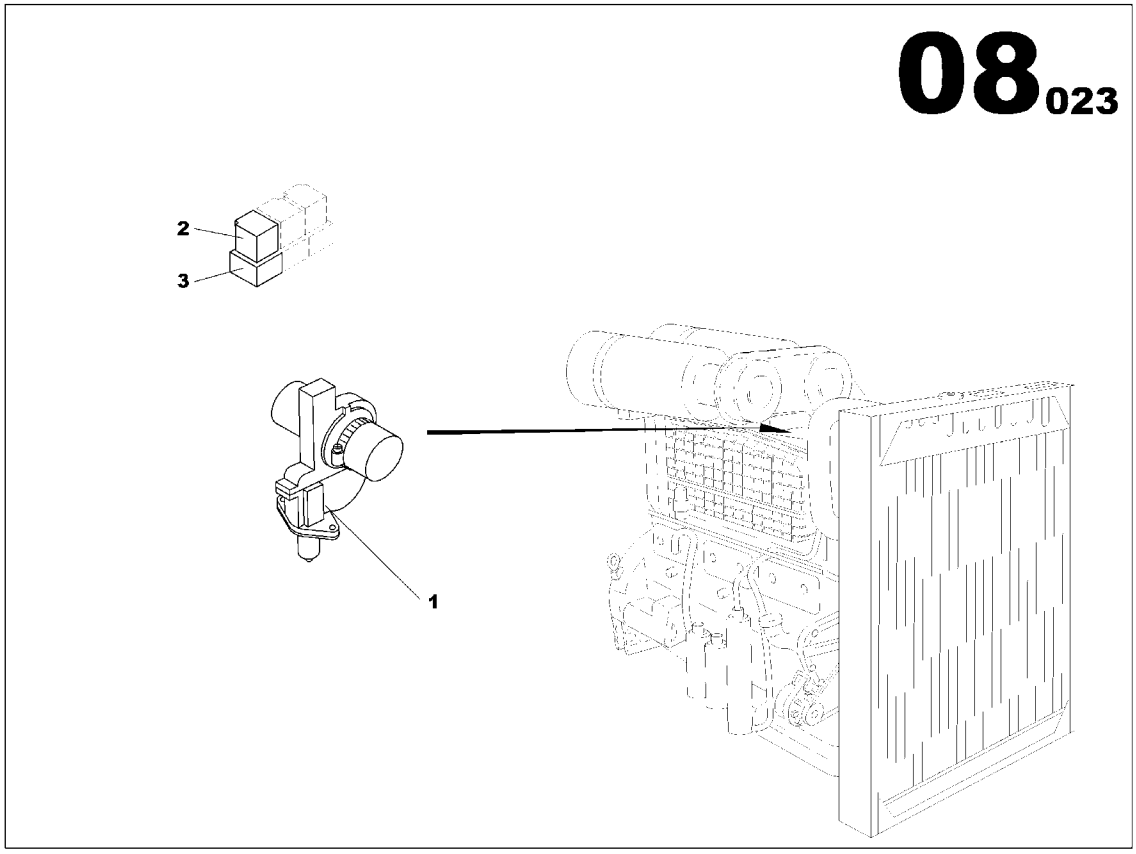

AIR SHUT OFF VALVE VO TWD1210-TAD12/16L ASSEMBLY 85418507

Part numbers listed are only parts used in this model

Item	Part No.	Description	Qty	Un	From SN	To SN	Order PN	Page
1	17137787	AIR SHUT OFF VALVE D76	1	UN			17137787	
2	85423366	RELAY 24V 10/20A	1	UN			85423366	
3	85408912	AUTOMOBILE RELAY BASE	1	UN			85408912	

SPARK ARRESTER INERIS DN175 ASSEMBLY

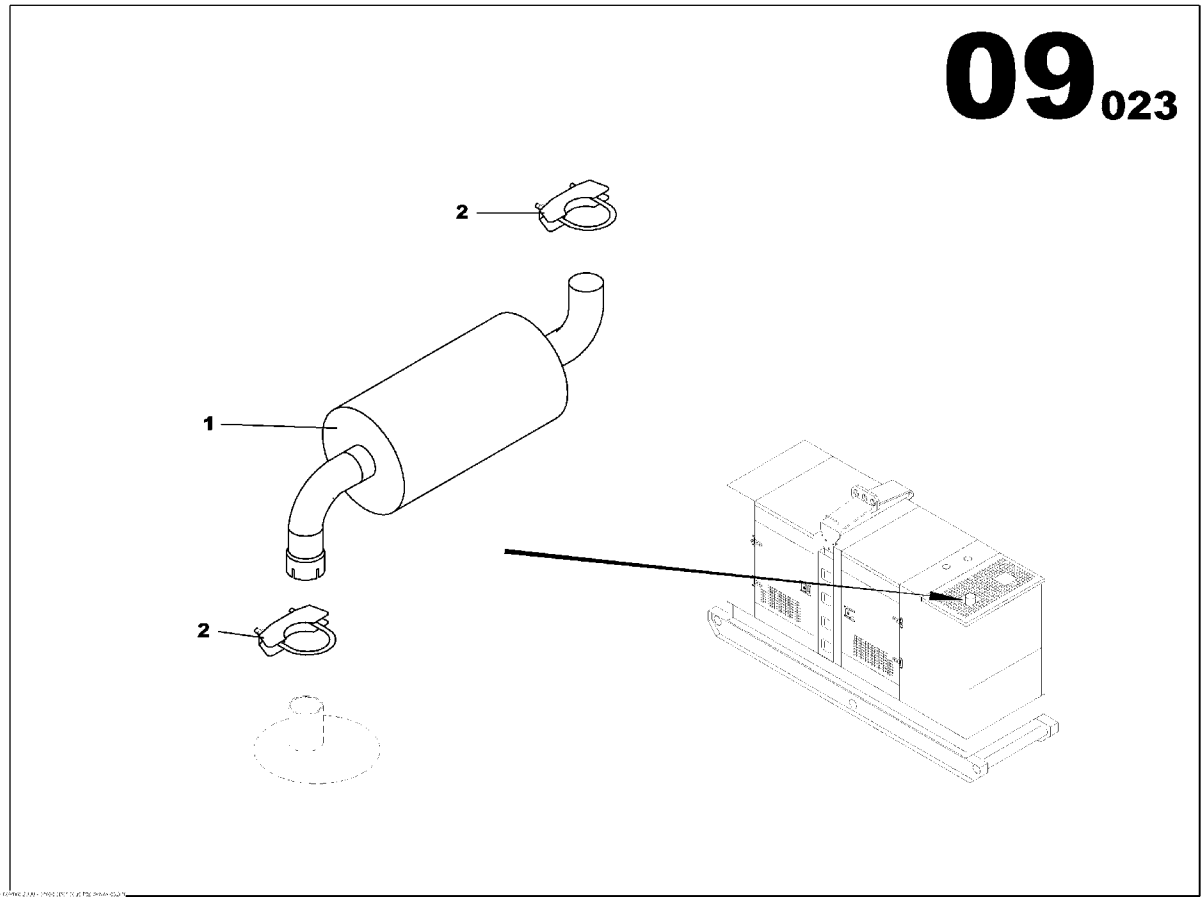

SPARK ARRESTER INERIS DN175 ASSEMBLY
85425080

Part numbers listed are only parts used in this model

Item	Part No.	Description	Qty	Un	From SN	To SN	Order PN	Page
1	85425098	INERIS SPARK ARRESTER DN125	1	UN			85425098	
2	85425106	HOSE CLAMP D203 ASSEMBLY	1	UN			85425106	233

HOSE CLAMP D203 ASSEMBLY

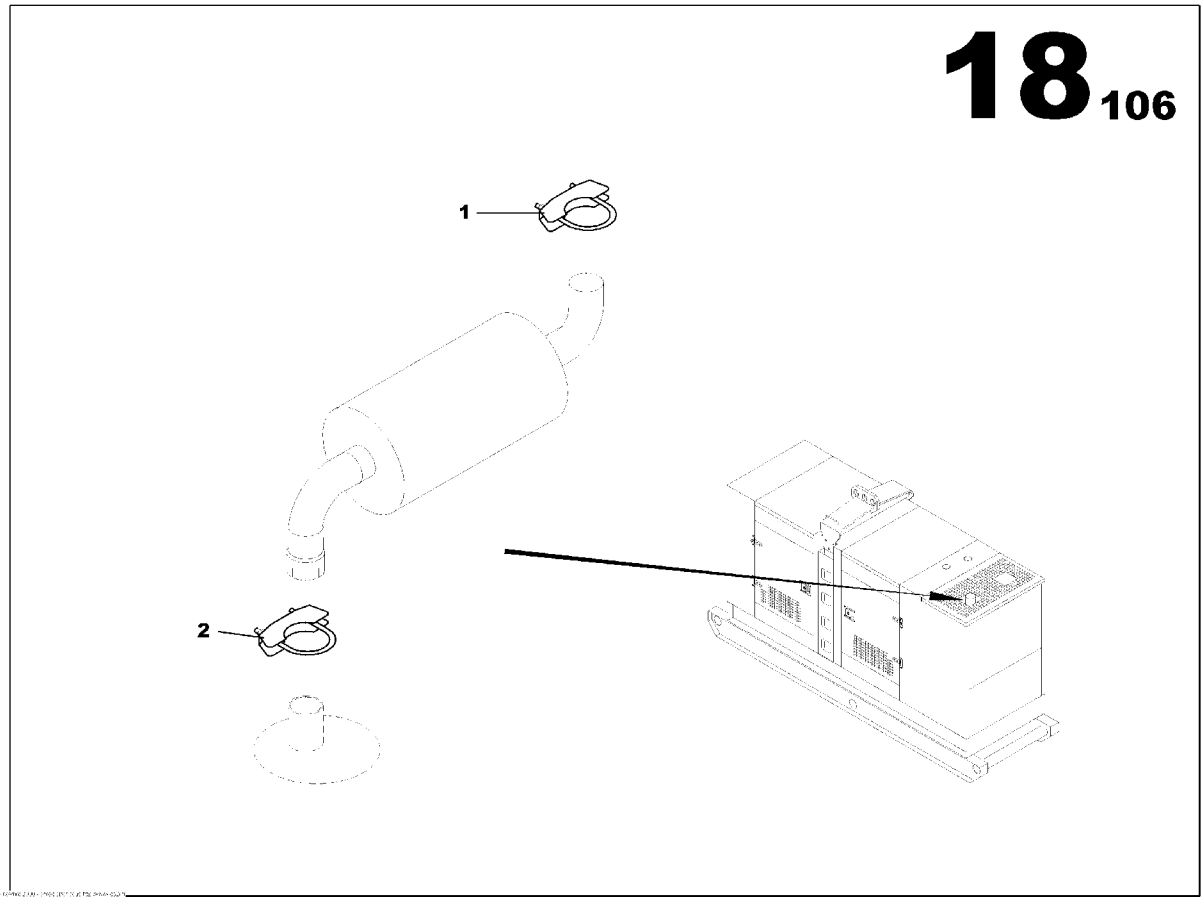

HOSE CLAMP D203 ASSEMBLY
85425106

Part numbers listed are only parts used in this model

Item	Part No.	Description	Qty	Un	From SN	To SN	Order PN	Page
1	85425114	BASE CLAMP D203	1	UN			85425114	
2	85425122	CLAMP D203	1	UN			85425122	

3 WAYS FUEL VALVES OPTION

3 WAYS FUEL VALVES OPTION

Part numbers listed are only parts used in this model

Item	Part No.	Description	Qty	Un	From SN	To SN	Order PN	Page
1	17137464	3 WAYS FUEL VALVE ASSEMBLY	1	UN			17137464	

Index

Part number	Order number	Page
85628444	85628444	6
85416667	85416667	42
85416675	85416675	224
85629442	85629442	46
85629459	85629459	48
17137084	17137084	92
17137084	17137084	92
85430023	85430023	212
85629467	85629467	212
85629475	85629475	212
85629483	85629483	212
85629491	85629491	210
17137175	17137175	102
85422616	85422616	10
85501930	85501930	10
85629517	85629517	10
85629525	85629525	6
85403509	85403509	64
85403517	85403517	60
85629541	85629541	58
85421451	85421451	70
17131343	17131343	58
17137241	17137241	58
85633386	85633386	94
17137308	17137308	70
17137324	17137324	58
17137324	17137324	58
17130196	17130196	58
17137365	17137365	56
17137373	17137373	54
17137464	17137464	236
17137472	17137472	68
17137480	17137480	54
85424331	85424331	78
85417814	85417814	78
85403723	85403723	78
17137605	17137605	78
85416568	17141110	78
17141110	17141110	78
17137670	17137670	76
17137688	17137688	74
85413581	85413581	14
85417699	85417699	14
85417541	85417541	14
85417541	85417541	16
85421444	85421444	14
85418507	85418507	228
85629749	85629749	14
85629756	85629756	6
17137787	17137787	230
85423614	85423614	86
85425098	85425098	232
85425080	85425080	228
85496933	85496933	86
85622256	85622256	86
85629863	85629863	86
17137829	17137829	114
17137837	17137837	80
17137886	17137886	114
17137894	17137894	86
17137902	17137902	84
17137910	17137910	80
17137936	17137936	86
17137993	17137993	86
85404572	85404572	64
85404580	85404580	58
85404598	85404598	18
85404606	85404606	18
85417459	85417459	66
85629939	85629939	6
17138017	17138017	58
17138017	17138017	58
17138033	17138033	92
17138033	17138033	92
17138090	17138090	90
17138108	17138108	88
17138173	17138173	100
17138181	17138181	98
85401875	85401875	92
17138223	17138223	82
17138231	17138231	82
17138249	17138249	82
85630093	85630093	48
85630101	85630101	52
85630119	85630119	52
85630127	85630127	52
85630135	85630135	52
85630143	85630143	52
85630150	85630150	92
17138355	17138355	92

Index

Part number	Order number	Page
17138371	17138371	92
17138397	17138397	92
17138397	17138397	92
85497386	85497386	114
17138439	17138439	92
85424513	85424513	86
17138538	17138538	114
17138546	17138546	114
17138553	17138553	114
17138561	17138561	114
17138579	17138579	114
17138587	17138587	114
17138595	17138595	114
17138686	17138686	114
17138694	17138694	114
17138777	17138777	114
17138785	17138785	118
17138793	17138793	118
17138819	17138819	114
17138827	17138827	114
17138850	17138850	128
17138868	17138868	112
17138876	17138876	98
17138991	17138991	114
17139007	17139007	114
17139015	17139015	114
17139023	17139023	114
17139031	17139031	114
17139049	17139049	114
17139056	17139056	114
17139064	17139064	114
17139072	17139072	106
17139080	17139080	106
17139098	17139098	102
17139247	17139247	114
17139254	17139254	114
17139320	17139320	114
17139346	17139346	114
17139387	17139387	114
17139395	17139395	114
17139460	17139460	120
17139486	17139486	98
17139494	17139494	118
17139528	17139528	120
85406130	85406130	130
85406155	85406155	114
85406189	85406189	114
85630515	85630515	138
85509305	85509305	114
17139544	17139544	130
17139551	17139551	130
17139569	17139569	130
85417186	85417186	114
85406213	85406213	114
85492460	85492460	114
85509263	85509263	94
17139577	17139577	114
17139585	17139585	116
17139593	17139593	116
17139627	17139627	116
17139635	17139635	116
17139650	17139650	116
85417293	85417293	78
85417244	85417244	78
85417202	85417202	78
85406460	85406460	108
17135690	17135690	160
17139676	17139676	182
17132192	17132192	182
17132192	17132192	192
85416915	85416915	192
85634517	85634517	154
85634517	85634517	160
85638294	85638294	154
85638310	85638310	164
85638310	85638310	162
85638310	85638310	154
85634582	85634582	164
85634582	85634582	162
85634582	85634582	154
85638328	85638328	154
85634616	85634616	98
85638336	85638336	152
85630622	85630622	24
17132200	17132200	126
17132218	17132218	92
17139684	17139684	186
17132325	17132325	66
17139692	17139692	66
17139726	17139726	92

Index

Part number	Order number	Page
85638476	85638476	160
85638476	85638476	154
85638492	85638492	160
85638492	85638492	154
17139809	17139809	102
17132424	17132424	124
17139833	17139833	176
17139833	17139833	36
17139858	17139858	184
17139882	17139882	184
17139916	17139916	134
17139924	17139924	174
17139932	17139932	34
17139940	17139940	32
17139965	17139965	184
17139981	17139981	130
17140047	17140047	184
17140054	17140054	182
17140062	17140062	174
17140096	17140096	186
17132457	17132457	192
17140112	17140112	92
17140120	17140120	92
17140146	17140146	186
17140153	17140153	186
17140161	17140161	184
17140179	17140179	130
17140187	17140187	128
17140195	17140195	124
17140203	17140203	174

Part number	Order number	Page
85638690	85638690	26
85635217	85635217	28
85407906	85407906	98
85407922	85407922	102
85416907	85416907	24
85635308	85635308	172
17132804	17132804	228
85410942	85410942	170
17132812	17132812	206
85635316	85635316	222
17132820	17132820	220
85408227	85408227	122
85504017	85504017	164
85504017	85504017	162
17135708	17135708	162
17135708	17135708	164
85630663	85630663	218
85503993	85503993	136
85630721	85630721	218
85636959	85636959	146
85504033	85504033	138
85635399	85635399	210
17132846	17132846	168
85635415	85635415	168
17140260	17140260	20
85638724	85638724	148
85499499	85499499	176
85638849	85638849	192
17140310	17140310	176
85630804	85630804	22

Part number	Order number	Page
85630812	85630812	24
85630820	85630820	24
85638971	85638971	22
85635704	85635704	26
85635712	85635712	22
17140575	17140575	176
17140583	17140583	176
17140591	17140591	176
17140609	17140609	176
85408334	85408334	122
85408391	85408391	154
85502235	85502235	78
17133018	17133018	192
85417913	85417913	192
85408573	85408573	206
85408581	85408581	220
85408599	85408599	160
85504223	85504223	136
85408615	85408615	160
85408854	85408854	160
85423366	85423366	230
85423366	85423366	148
85408912	85408912	24
85408912	85408912	148
85408912	85408912	230
85427102	85427102	148
85427268	85427268	28
85639029	85639029	192
85427276	85427276	28
85427029	85427029	30

Index

Part number	Order number	Page
85426112	85426112	142
85426112	85426112	140
85426138	85426138	140
85426138	85426138	142
85426146	85426146	142
85426146	85426146	140
85499754	85499754	176
85499754	85499754	36
85426120	85426120	142
85426120	85426120	140
85623809	85623809	218
85635886	85635886	192
85635894	85635894	154
85635902	85635902	160
85635902	85635902	154
85505154	85505154	142
85505154	85505154	140
85626828	85626828	166
17133067	17133067	204
17135716	17135716	162
17133687	17133687	164
85631422	85631422	164
85631422	85631422	162
17133075	17133075	210
17133083	17133083	174
17133109	17133109	194
17133117	17133117	192
17135039	17135039	192
17133125	17133125	192
85636991	85636991	138

Part number	Order number	Page
85627198	85636991	138
17133133	17133133	192
85411569	85411569	134
85636140	85636140	144
85636173	85636173	210
17140724	17140724	210
17133174	17133174	134
17140732	17140732	210
17140740	17140740	134
85636256	85636256	210
17140757	17140757	134
17135724	17135724	158
85639292	85639292	156
17140765	17140765	152
17140773	17140773	134
17140781	17140781	134
85423119	85423119	12
85409068	85409068	64
85409076	85409076	64
85425114	85425114	234
85409084	85409084	192
85409126	85409126	192
85424901	85424901	12
85409175	85409175	130
85409191	85409191	122
85639318	85639318	178
85639318	85639318	38
85429744	85429744	186
85429553	85429553	196
85429553	85429553	180

Part number	Order number	Page
85429553	85429553	40
85507911	85507911	204
85507911	85507911	202
85507911	85507911	198
85507911	85507911	190
85507911	85507911	178
85507911	85507911	38
85507911	85507911	194
85507911	85507911	200
85509743	85509743	190
85509743	85509743	214
17133240	17133240	186
85409225	85409225	130
85409233	85409233	130
85409241	85409241	130
85636363	85636363	196
85636363	85636363	180
85636363	85636363	40
85636371	85636371	190
17130766	17130766	160
85636389	85636389	204
85636389	85636389	198
85636389	85636389	188
85636389	85636389	186
85636389	85636389	180
85636389	85636389	202
85636389	85636389	194
85636389	85636389	40
85636389	85636389	160
17140823	17140823	214

Index

Part number	Order number	Page
85631554	85631554	212
85636454	85636454	192
85639383	85639383	176
85639383	85639383	36
17140880	17140880	184
17140898	17140898	184
85639417	85639417	176
85639417	85639417	36
17133257	17133257	186
17133265	17133265	192
17133273	17133273	192
17133281	17133281	192
17133299	17133299	192
85509222	85509222	60
85430254	85430254	214
85409258	85409258	50
85622967	85622967	12
85622967	85622967	10
17140955	17140955	104
17140963	17140963	70
85507945	85507945	70
85423093	85423093	10
85423044	85423044	10
85631653	85631653	50
85631661	85631661	214
17140971	17140971	104
85631687	85631687	214
85631695	85631695	50
85631703	85631703	18
85631729	85631729	58

Part number	Order number	Page
85631737	85631737	58
85631745	85631745	18
85417780	85417780	86
85501880	85501880	16
85409423	85409423	12
85409423	85409423	214
85409423	85409423	10
85425122	85425122	234
85425254	85425254	14
85417723	85417723	14
17130816	17130816	62
85425106	85425106	232
85504207	85504207	146
85504207	85504207	136
17130824	17130824	62
85509727	85509727	70
85509727	85509727	58
85631786	85631786	58
85425551	85425551	72
85507952	85507952	70
85421758	85421758	12
85421741	85421741	12
17133349	17133349	110
17133349	17133349	110
17141003	17141003	102
85416451	85416451	50
85424885	85424885	12
85416436	85416436	62
85424844	85424844	214
85424844	85424844	214

Part number	Order number	Page
85629392	85629392	12
85629392	85629392	10
85631851	85631851	14
85506467	85506467	94
85427748	85427748	88
85500213	85500213	96
85503886	85503886	94
85623684	85623684	96
85631927	85631927	94
17135732	17135732	162
85639565	85639565	152
22207054	22207054	94
17135740	17135740	164
85639573	85639573	132
85639599	85639599	124
85639680	85639680	198
85636660	85636660	186
85636660	85636660	160
85636660	85636660	154
85402170	85402170	8
85401891	85401891	8
85426864	85426864	8
85627289	85627289	8
85402139	85402139	8
85402162	85402162	8
85627016	85627016	8
85627305	85627305	8
85627313	85627313	8
85627321	85627321	8
85627339	85627339	8

Index

Part number	Order number	Page
85628378	85628378	8
85628386	85628386	8
85628402	85628402	8
85628410	85628410	8
85628436	85628436	8
85628428	85628428	8
85632024	85632024	8
85632032	85632032	8
85632040	85632040	8
85425577	85425577	44
85425577	85425577	226
85402444	85402444	44
85402444	85402444	226
85426179	85426179	44
85426179	85426179	226
85425957	85425957	44
85425957	85425957	226
85508836	85508836	44
85508836	85508836	226
85508885	85508885	44
85508885	85508885	226
85508935	85508935	44
85508935	85508935	226
85508984	85508984	44
85508984	85508984	226
85509016	85509016	44
85509016	85509016	226
85509065	85509065	44
85509065	85509065	226
85509131	85509131	44
85509131	85509131	226
85401354	85401354	16
85401339	85401339	16
85501229	85501229	16
85501294	85501294	16
85401644	85401644	72
85503019	85503019	72
85503001	85503001	72
85502995	85502995	72
85502987	85502987	72
85502979	85502979	72
85502961	85502961	72
85502953	85502953	72
85502946	85502946	72
85502599	85502599	72
85502581	85502581	72
85502557	85502557	72
85402519	85402519	160
85504090	85504090	156
85504264	85504264	146
85504199	85504199	164
85504199	85504199	162
85504215	85504215	146
85504215	85504215	136
85632081	85632081	148
85632115	85632115	148
85632123	85632123	148
17135476	17135476	160
17135484	17135484	160
85639821	85639821	160
85639839	85639839	158
17141375	17141375	136
85425916	85425916	44
85425916	85425916	226
85632172	85632172	150
85636694	85636694	154
85632198	85632198	120
85410140	85410140	186
85636728	85636728	196
85636728	85636728	180
85636728	85636728	40
85636736	85636736	204
85636736	85636736	202
85636736	85636736	200
85636736	85636736	198
85636736	85636736	178
85636736	85636736	38
85429793	85429793	194
85429793	85429793	190
85636751	85636751	190
85430213	85430213	186
85430270	85430270	214
85632222	85632222	120
85632248	85632248	214